(19) Europäisches Patentamt
European Patent Office
Office européen des brevets

(11) EP 0 883 094 A2

(12) EUROPEAN PATENT APPLICATION

(43) Date of publication:
09.12.1998 Bulletin 1998/50

(51) Int. Cl.[6]: **G07D 7/00**

(21) Application number: **98115458.6**

(22) Date of filing: **14.01.1991**

(84) Designated Contracting States:
DE FR GB IT NL

(30) Priority: **05.02.1990 US 475111**

(62) Document number(s) of the earlier application(s) in accordance with Art. 76 EPC:
95116745.1 / 0 706 156
91903057.7 / 0 466 869

(71) Applicant:
CUMMINS-ALLISON CORPORATION
Mount Prospect Illinois 60056 (US)

(72) Inventors:
- **Raterman, Donald E.**
  Deerfield, Illinois 60015 (US)
- **Graves, Bradford T.**
  Arlington Heights, Illinois 60004 (US)

(74) Representative:
Grünecker, Kinkeldey,
Stockmair & Schwanhäusser
Anwaltssozietät
Maximilianstrasse 58
80538 München (DE)

Remarks:
This application was filed on 17 - 08 - 1998 as a divisional application to the application mentioned under INID code 62.

(54) Method and apparatus for currency discrimination and counting

(57) An improved method and apparatus for discriminating between currency bills of different denominations uses an optical sensing and correlation technique based on the sensing of bill reflectance characteristics obtained by illuminating and scanning a bill. A series of detected reflectance signals are obtained by sampling and processing the reflected light as the currency bill is moved across a light strip. The sample data is subjected to processing, whereby the reflectance data represents a characteristic pattern that is unique for a given bill denomination and incorporates sufficient distinguishing features between characteristic patterns for discriminating between different currency denominations.

A plurality of master characteristic patterns are generated and stored using original bills for each denomination of currency to be detected. The characteristic pattern for a scanned currency bill is compared to each of said stored master patterns to determine the degree of correlation therebetween, and thereby to identify the denomination of said currency bill.

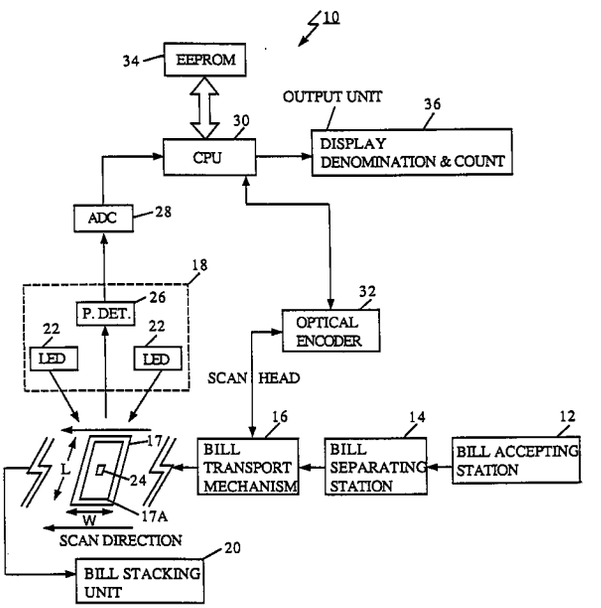

FIG. 1

EP 0 883 094 A2

Description

BACKGROUND OF THE INVENTION

Field of the Invention

The present invention relates, in general, to currency identification. The invention relates more particularly to a method and apparatus for automatic discrimination and counting of currency bills of different denominations using light reflectivity characteristics of indicia printed upon the currency bills.

Description of the Related Art

A variety of techniques and apparatus have been used to satisfy the requirements of automated currency handling systems. At the lower end of sophistication in this area of technology are systems capable of handling only a specific type of currency, such as a specific dollar denomination, while rejecting all other currency types. At the upper end are complex systems which are capable of identifying and discriminating between and automatically counting multiple currency denominations.

Currency discrimination systems typically employ either magnetic sensing or optical sensing for discriminating between different currency denominations. Magnetic sensing is based on detecting the presence or absence of magnetic ink in portions of the printed indicia on the currency by using magnetic sensors, usually ferrite core-based sensors, and using the detected magnetic signals, after undergoing analog or digital processing, as the basis for currency discrimination. The more commonly used optical sensing technique, on the other hand, is based on detecting and analyzing variations in light reflectance or transmissivity characteristics occurring when a currency bill is illuminated and scanned by a strip of focused light. The subsequent currency discrimination is based on the comparison of sensed optical characteristics with prestored parameters for different currency denominations, while accounting for adequate tolerances reflecting differences among individual bills of a given denomination.

A major obstacle in implementing automated currency discrimination systems is obtaining an optimum compromise between the criteria used to adequately define the characteristic pattern for a particular currency denomination, the time required to analyze test data and compare it to predefined parameters in order to identify the currency bill under scrutiny, and the rate at which successive currency bills may be mechanically fed through and scanned. Even with the use of microprocessors for processing the test data resulting from the scanning of a bill, a finite amount of time is required for acquiring samples and for the process of comparing the test data to stored parameters to identify the denomination of the bill. Most of the optical scanning systems available today utilize complex algorithms for obtaining a large number of reflectance data samples as a currency bill is scanned by an optical scanhead and for subsequently comparing the data to corresponding stored parameters to identify the bill denomination. Conventional systems require a relatively large number of optical samples per bill scan in order to sufficiently discriminate between currency denominations, particularly those denominations for which the reflectance patterns are not markedly distinguishable. The use of the large number of data samples slows down the rate at which incoming bills may be scanned and, more importantly, requires a correspondingly longer period of time to process the data in accordance with the discrimination algorithm. The processing time is further increased if the system is also adapted to counting of identified currency denominations. The speed at which bills can be classified and counted is thereby restricted since real time processing requires that the analysis of scanned data for a bill be completed and the bill be identified and counted as belonging to a particular currency denomination before the subsequent bill gets positioned across and is scanned by the scanhead.

A major problem associated with conventional systems is that, in order to obtain the required large number of reflectance samples required for accurate currency discrimination, such systems are restricted to scanning bills along the longer dimension of currency bills. Lengthwise scanning, in turn, has several inherent drawbacks including the need for an extended transport path for relaying the bill lengthwise across the scanhead and the added mechanical complexity involved in accommodating the extended path as well as the associated means for ensuring uniform, non-overlapping registration of bills with the sensing surface of the scanhead.

The end result is that systems capable of accurate currency discrimination are costly, mechanically bulky and complex, and generally incapable of both currency discrimination and counting at high speeds with a high degree of accuracy.

SUMMARY OF THE INVENTION

It is a principal object of the present invention to provide an improved method and apparatus for identifying and counting currency bills comprising a plurality of currency denominations.

It is another object of this invention to provide an improved method and apparatus of the above kind which is capable of efficiently discriminating between and counting bills of several currency denominations at a high speed and with a high degree of accuracy.

A related object of the present invention is to provide such an improved currency discrimination and counting apparatus which is compact, economical, and has uncomplicated construction and operation.

Briefly, in accordance with the present invention, the objectives enumerated above are achieved by

means of an improved optical sensing and correlation technique adopted to both counting and denomination discrimination of currency bills. The technique is based on the optical sensing of bill reflectance characteristics obtained by illuminating and scanning a bill along its narrow dimension, approximately about the central section of the bill. Light reflected from the bill as it is optically scanned is detected and used as an analog representation of the variation in the "black" and "white" content of the printed pattern or indicia on the bill surface.

A series of such detected reflectance signals are obtained by sampling and digitally processing, under microprocessor control, the reflected light at a plurality of predefined sample points as the bill is moved across the illuminated strip with its narrow dimension parallel to the direction of transport of the bill. Accordingly, a fixed number of reflectance samples is obtained across the narrow dimension of the note. The data samples obtained for a bill scan are subjected to digital processing, including a normalizing process to deaccentuate variations due to "contrast" fluctuations in the printed pattern or indicia existing on the surface of the bill being scanned. The normalized reflectance data represent a characteristic pattern that is fairly unique for a given bill denomination and incorporates sufficient distinguishing features between characteristic patterns for different currency denominations so as to accurately differentiate therebetween.

By using the above approach, a series of master characteristic patterns are generated and stored using "original" or "new" bills for each denomination of currency that is to be detected. According to a preferred embodiment, four characteristic patterns are generated and stored within system memory for each detectable currency denomination. The stored patterns correspond, respectively, to optical scans performed on the "top" and "bottom" surfaces of a bill along "forward" and "reverse" directions relative to the pattern printed on the bill. Preferably, the currency discrimination and counting method and apparatus of this invention is adapted to identify seven (7) different denominations of U.S. currency, i.e., $1, $2, $5, $10, $20, $50 and $100. Accordingly, a master set of 28 different characteristic patterns is stored within the system memory for subsequent correlation purposes.

According to the correlation technique of this invention, the pattern generated by scanning a bill under test and processing the sampled data is compared with each of the 28 prestored characteristic patterns to generate, for each comparison, a correlation number representing the extent of similarity between corresponding ones of the plurality of data samples for the compared patterns. Denomination identification is based on designating the scanned bill as belonging to the denomination corresponding to the stored characteristic pattern for which the correlation number resulting from pattern comparison is determined to be the highest. The possibility of a scanned bill having its denomination mischaracterized following the comparison of characteristic patterns, is significantly reduced by defining a bi-level threshold of correlation that must be satisfied for a "positive" call to be made.

In essence, the present invention provides an improved optical sensing and correlation technique for positively identifying any of a plurality of different bill denominations regardless of whether the bill is scanned on its "top" or "bottom" face along either the "forward" or "reverse" directions. The invention is particularly adapted to be implemented with a system programmed to track each identified currency denomination so as to conveniently present the aggregate total of bills that have been identified at the end of a scan run.

Also in accordance with this invention, currency detecting and counting apparatus is disclosed which is particularly adapted for use with the novel sensing and correlation technique summarized above. The apparatus incorporates an abbreviated curved transport path for accepting currency bills that are to be counted and transporting the bills about their narrow dimension across a scanhead located downstream of the curved path and onto a conventional stacking station where sensed and counted bills are collected. The scanhead operates in conjunction with an optical encoder which is adapted to initiate the capture of a predefined number of reflectance data samples when a bill (and, thus, the indicia or pattern printed thereupon) moves across a coherent strip of light focused downwardly of the scanhead.

The scanhead uses an array of photo diodes to focus a coherent light strip of predefined dimensions and having a normalized distribution of light intensity across the illuminated area. The photo diodes are angularly disposed and focus the desired strip of light onto the narrow dimension of a bill positioned flat across the scanning surface of the scanhead. A photo detector positioned above the illuminated strip detects light reflected upwardly from the bill. The photo detector is controlled by the optical encoder to obtain the desired reflectance samples.

Initiation of sampling is based upon the detection of the change in reflectance value that occurs when the outer border of the printed pattern on a bill is encountered relative to the reflectance value obtained at the edge of the bill where no printed pattern exists. According to a feature of this invention, illuminated strips of at least two different dimensions are used for the scanning process. A narrow strip is used initially to detect the starting point of the printed pattern on a bill and is adapted to distinguish the thin borderline that typically marks the starting point of and encloses the printed pattern on a bill. For the rest of the narrow dimension scanning following detection of the border line of the printed pattern, a substantially wider strip of light is used to collect the predefined number of samples for a bill scan. The generation and storage of characteristic patterns

using "original" notes and the subsequent comparison and correlation procedure for classifying the scanned bill as belonging to one of several predefined currency denominations is based on the above-described sensing and correlation technique.

Brief Description Of The Drawings

Other objects and advantages of the invention will become apparent upon reading the following detailed description in conjunction with the drawings in which:

FIG. 1 is a functional block diagram illustrating the conceptual basis for the optical sensing and correlation method and apparatus, according to the system of this invention;
FIG. 2 is a block diagram illustrating a preferred circuit arrangement for processing and correlating reflectance data according to the optical sensing and counting technique of this invention;
FIGS. 3-8 are flow charts illustrating the sequence of operations involved in implementing the optical sensing and correlation technique;
FIGS. 9A-C are graphical illustrations of representative characteristic patterns generated by narrow dimension optical scanning of a currency bill;
FIGS. 10A-E are graphical illustrations of the effect produced on correlation pattern by using the progressive shifting technique, according to an embodiment of this invention;
FIG. 11 is a perspective view showing currency discrimination and counting apparatus particularly adapted to and embodying the optical sensing and correlation technique of this invention;
FIG. 12 is a partial perspective view illustrating the mechanism used for separating currency bills and injecting them in a sequential fashion into the transport path;
FIG. 13 is a side view of the apparatus of FIG. 11 illustrating the separation mechanism and the transport path;
FIG. 14 is a side view of the apparatus of FIG. 11 illustrating details of the drive mechanism;
FIG. 15 is a top view of the currency discriminating and counting apparatus shown in FIGS. 11-14;
FIG. 16 is a sectional side view showing the angular disposition of the photo diodes within the scanhead;
FIG. 17 is an illustration of the light distribution produced about the optical scanhead; and
FIG. 18 is a top view illustration of the optical mask used to generate the scan strips of different dimensions.

While the invention is susceptible to various modifications and alternative forms, specific embodiments thereof have been shown by way of example in the drawings and will herein be described in detail. It should be understood, however, that it is not intended to limit the invention to the particular forms disclosed, but on the contrary, the intention is to cover all modifications, equivalents, and alternatives falling within the spirit and scope of the invention as defined by the appended claims.

DESCRIPTION OF THE PREFERRED EMBODIMENTS

Referring now to FIG. 1, there is shown a functional block diagram illustrating the optical sensing and correlation system according to this invention. The system 10 includes a bill accepting station 12 where stacks of currency bills that need to be identified and counted are positioned. Accepted bills are acted upon by a bill separating station 14 which functions to pick out or separate one bill at a time for being sequentially relayed by a bill transport mechanism 16, according to a precisely predetermined transport path, across an optical scanhead 18 where the currency denomination of the bill is scanned, identified and counted. The scanned bill is then transported to a bill stacking station 20 where bills so processed are stacked for subsequent removal.

The optical scanhead 18 comprises at least one light source 22 directing a beam of coherent light downwardly onto the bill transport path so as to illuminate a substantially rectangular light strip 24 upon a currency bill 17 positioned on the transport path below the scanhead 18. Light reflected off the illuminated strip 24 is sensed by a photodetector 26 positioned directly above the strip. The analog output of photodetector 26 is converted into a digital signal by means of an analog-to-digital (ADC) convertor unit 28 whose output is fed as a digital input to a central processing unit (CPU) 30.

According to a feature of this invention, the bill transport path is defined in such a way that the transport mechanism 16 moves currency bills with the narrow dimension "W" of the bills being parallel to the transport path and the scan direction. Thus, as a bill 17 moves on the transport path on the scanhead 18, the coherent light strip 24 effectively scans the bill across the narrow dimension "W" of the bill. Preferably, the transport path is so arranged that a currency bill 17 is scanned approximately about the central section of the bill along its narrow dimension, as best shown in FIG. 1.

The scanhead 18 functions to detect light reflected from the bill as it moves across the illuminated light strip 24 and to provide an analog representation of the variation in light so reflected which, in turn, represents the variation in the "black" and "white" content of the printed pattern or indicia on the surface of the bill. This variation in light reflected from the narrow dimension scanning of the bills serves as a measure for distinguishing, with a high degree of confidence, among a plurality of currency denominations which the system of this invention is programmed to handle.

A series of such detected reflectance signals are obtained across the narrow dimension of the bill, or

across a selected segment thereof, and the resulting analog signals are digitized under control of the CPU 30 to yield a fixed number of digital reflectance data samples. The data samples are then subjected to a digitizing process which includes a normalizing routine for processing the sampled data for improved correlation and for smoothing out variations due to "contrast" fluctuations in the printed pattern existing on the bill surface. The normalized reflectance data so digitized represents a characteristic pattern that is fairly unique for a given bill denomination and provides sufficient distinguishing features between characteristic patterns for different currency denominations, as will be explained in detail below.

In order to ensure strict correspondence between reflectance samples obtained by narrow dimension scanning of successive bills, the initiation of the reflectance sampling process is preferably controlled through the CPU 30 by means of an optical encoder 32 which is linked to the bill transport mechanism 16 and precisely tracks the physical movement of the bill 17 across the scanhead 18. More specifically, the optical encoder 32 is linked to the rotary motion of the drive motor which generates the movement imparted to the bill as it is relayed along the transport path. In addition, it is ensured that positive contact is maintained between the bill and the transport path, particularly when the bill is being scanned by the scanhead 18. Under these conditions, the optical encoder is capable of precisely tracking the movement of the bill relative to the light strip generated by the scanhead by monitoring the rotary motion of the drive motor.

The output of photodetector 26 is monitored by the CPU 30 to initially detect the presence of the bill underneath the scanhead and, subsequently, to detect the starting point of the printed pattern on the bill, as represented by the thin borderline 17A which typically encloses the printed indicia on currency bills. Once the borderline 17A has been detected, the optical encoder is used to control the timing and number of reflectance samples that are obtained from the output of the photodetector 26 as the bill 17 moves across the scanhead 18 and is scanned along its narrow dimension.

The detection of the borderline constitutes an important step and realizes improved discrimination efficiency since the borderline serves as an absolute reference point for initiation of sampling. If the edge of a bill were to be used as a reference point, relative displacement of sampling points can occur because of the random manner in which the distance from the edge to the borderline varies from bill to bill due to the relatively large range of tolerances permitted during printing and cutting of currency bills. As a result, it becomes difficult to establish direct correspondence between sample points in successive bill scans and the discrimination efficiency is adversely affected.

The use of the optical encoder for controlling the sampling process relative to the physical movement of a bill across the scanhead is also advantageous in that the encoder can be used to provide a predetermined delay following detection of the borderline prior to initiation of samples. The encoder delay can be adjusted in such a way that the bill is scanned only across those segments along its narrow dimension which contain the most distinguishable printed indicia relative to the different currency denominations.

In the case of U.S. currency, for instance, it has been determined that the central, approximately two-inch portion of currency bills, as scanned across the central section of the narrow dimension of the bill, provides sufficient data for distinguishing between the various U.S. currency denominations on the basis of the correlation technique of this invention. Accordingly, the optical encoder can be used to control the scanning process so that reflectance samples are taken for a set period of time and only after a certain period of time has elapsed since the borderline has been detected, thereby restricting the scanning to the desired central portion of the narrow dimension of the bill.

The optical sensing and correlation technique is based upon using the above process to generate a series of master characteristic patterns using "new" or "original" bills for each denomination of currency that is to be detected. According to a preferred embodiment, four characteristic patterns are generated and stored within system memory, preferably in the form of an EEPROM 34 (see FIG. 1), for each detectable currency denomination. The characteristic patterns for each bill are generated corresponding, respectively, to optical scans, i.e., the process of obtaining the pre-determined number of reflectance samples, performed on the "top" and "bottom" surfaces of the bill taken both along the "forward" and "reverse" directions relative to the pattern printed on the bill.

In adapting the invented technique to U.S. currency, for example, characteristic patterns are generated and stored for seven different denominations of U.S. currency, i.e., $1, $2, $5, $10, $20, $50 and $100. Accordingly, a master set of 28 different characteristic patterns is stored within the system memory for subsequent correlation purposes. Once the master characteristic patterns have been stored, the pattern generated by scanning a bill under test is compared by the CPU 30 with each of the 28 pre-stored master characteristic patterns to generate, for each comparison, a correlation number representing the extent of correlation, i.e., similarity between corresponding ones of the plurality of data samples, for the patterns being compared.

The CPU 30 is programmed to identify the denomination of the scanned bill as corresponding to the stored characteristic pattern for which the correlation number resulting from pattern comparison is found to be the highest. In order to preclude the possibility of mischaracterizing the denomination of a scanned bill, as well as to reduce the possibility of spurious notes being identified as belonging to a valid denomination, a bi-level

threshold of correlation is used as the basis for making a "positive" call, as will be explained in detail below.

Using the above sensing and correlation approach, the CPU 30 is programmed to count the number of bills belonging to a particular currency denomination as part of a given set of bills that have been scanned for a given scan batch, and to determine the aggregate total of the currency amount represented by the bills scanned during a scan batch. The CPU 30 is also linked to an output unit 36 which is adapted to provide a display of the number of bills counted, the breakdown of the bills in terms of currency denomination, and the aggregate total of the currency value represented by counted bills. The output unit 36 can also be adapted to provide a print-out of the displayed information in a desired format.

Referring now to FIG. 2 there is shown a representation, in block diagram form, of a preferred circuit arrangement for processing and correlating reflectance data according to the system of this invention. As shown therein, the CPU 30 accepts and processes a variety of input signals including those from the optical encoder 32, the photodetector 26 and a memory unit 38, which can be a static random access memory (RAM) or an erasable programmable read only memory (EPROM). The memory unit 38 has stored within it the correlation program on the basis of which patterns are generated and test patterns compared with stored master programs in order to identify the denomination of test currency. A crystal 40 serves as the time base for the CPU 30, which is also provided with an external reference voltage V_{REF} on the basis of which peak detection of sensed reflectance data is performed, as explained in detail below.

The CPU 30 also accepts a timer reset signal from a reset unit 44 which, as shown in FIG. 2A, accepts the output voltage from the photodetector 26 and compares it, by means of a threshold detector 44A, relative to a pre-set voltage threshold, typically 5.0 volts, to provide a reset signal which goes "high" when a reflectance value corresponding to the presence of paper is sensed. More specifically, reflectance sampling is based on the premise that no portion of the illuminated light strip (24 in FIG. 1) is reflected to the photodetector in the absence of a bill positioned below the scanhead. Under these conditions, the output of the photodetector represents a "dark" or "zero" level reading. The photodetector output changes to a "white" reading, typically set to have a value of about 5.0 volts, when the edge of a bill first becomes positioned below the scanhead and falls under the light strip 24. When this occurs, the reset unit 44 provides a "high" signal to the CPU 30 and marks the initiation of the scanning procedure.

In accordance with a feature of this invention, the thickness of the illuminated strip of light produced by the light sources within the scanhead is set to be relatively small for the initial stage of the scan when the thin borderline is being detected. The use of the narrow slit increases the sensitivity with which the reflected light is detected and allows minute variations in the "gray" level reflected off the bill surface to be sensed. This is important in ensuring that the thin borderline of the pattern, i.e., the starting point of the printed pattern on the bill, is accurately detected. Once the borderline has been detected, subsequent reflectance sampling is performed on the basis of a relatively wider light strip in order to completely scan across the narrow dimension of the bill and obtain the desired number of samples, at a rapid rate. The use of a wider slit for the actual sampling also smoothens out the output characteristics of the photodetector and realizes the relatively large magnitude of analog voltage which is essential for accurate representation and processing of the detected reflectance values.

Returning to FIG. 2, the CPU 30 processes the output of photodetector 26 through a peak detector 46 which essentially functions to sample the photodetector output voltage and hold the highest, i.e., peak, voltage value encountered after the detector has been enabled. The peak detector is also adapted to define a scaled voltage on the basis of which the pattern borderline on bills is detected. The detector 46 includes an ADC 48 for digitizing the photodetector output and a digital-to-analog convertor (DAC) 50 for reconverting the signals to an analog form on the basis of the pre-selected reference voltage V_{REF} from the voltage source 42. The output of DAC 50 is fed through an inverting amplifier 52 to a voltage divider 54 which lowers the input voltage down to a scaled voltage V_S representing a predefined percentage of the peak value. The voltage V_S is based upon the percentage drop in output voltage of the peak detector as it reflects the transition from the "high" reflectance value resulting from the scanning of the unprinted edge portions of a currency bill to the relatively lower "gray" reflectance value resulting when the thin borderline is encountered. Preferably, the scaled voltage V_s is set to be about 70 - 80 percent of the peak voltage.

The scaled voltage V_S is supplied to a line detector 56 which is also provided with the incoming instantaneous output of the photodetector 26. The line detector 56 compares the two voltages at its input side and generates a signal L_{DET} which normally stays "low" and goes "high" when the edge of the bill is scanned. The signal L_{DET} goes "low" when the incoming photodetector output reaches the pre-defined percentage of the peak photodetector output up to that point, as represented by the voltage V_S. Thus, when the signal L_{DET} goes "low", it is an indication that the borderline of the bill pattern has been detected. At this point, the CPU 30 initiates the actual reflectance sampling under control of the encoder 32 (see FIG. 2) and the desired fixed number of reflectance samples are obtained as the currency bill moves across the illuminated light strip and is scanned along the central section of its narrow dimension.

When master characteristic patterns are being generated, the reflectance samples resulting from the scan-

ning of a "new" bill are loaded into corresponding designated sections within a system memory 60, which is preferably an EEPROM. The loading of samples is accomplished through a buffered address latch 58, if necessary. Preferably, master patterns are generated by scanning a "new" bill a plurality of times, typically three (3) times, and obtaining the average of corresponding data samples before storing the average as representing a master pattern. During currency discrimination, the reflectance values resulting from the scanning of a test bill are sequentially compared, under control of the correlation program stored within the memory unit 38, with each of the corresponding characteristic patterns stored within the EEPROM 60, again through the address latch 58.

Referring now to FIGS. 3-7, there are shown flow charts illustrating the sequence of operations involved in implementing the above-described optical sensing and correlation technique of this invention. FIG. 3, in particular, illustrates the sequence involved in detecting the presence of a bill under the scanhead and the borderline on the bill. This section of the system program, designated as "TRIGGER", is initiated at step 70. At step 71 a determination is made as to whether or not a start-of-note interrupt, which signifies that the system is ready to search for a presence of a bill, is set, i.e., has occurred. If the answer at step 71 is found to be positive, step 72 is reached where the presence of the bill below the scanhead is ascertained on the basis of the reset procedure described above in connection with the reset unit 44 of FIG. 2.

If the answer at step 72 is found to be positive, i.e., a bill is found to be present, step 73 is reached where a test is performed to see if the borderline has been detected on the basis of the reduction in peak value to a predefined percentage thereof, which, as described above, is indicated by the signal L_{DET} going "low." If the answer at step 73 is found to be negative, the program continues to loop until the borderline has been detected. If the answer at step 72 is found to be negative, i.e., no bill is found to be present, the start-of-note interrupt is reset at step 74 and the program returns from interrupt at step 75.

If the borderline is found to have been detected at step 73, step 76 is accessed where an A/D completion interrupt is enabled, thereby signifying that the analog-to-digital conversion can subsequently be performed at desired time intervals. Next, at step 77, the time when the first reflectance sample is to be obtained is defined, in conjunction with the output of the optical encoder. At step 78 the capture and digitization of the detected reflectance samples is undertaken by recalling a routine designated as "STARTA2D" which will be described in detail below. At the completion of the digitization process, the end-of-note interrupt is enabled at step 79, which resets the system for sensing the presence of the following bill to be scanned. Subsequently, at step 80 the program returns from interrupt. If the start-of-note interrupt is not found to have occurred at step 71, a determination is made at step 81 to see if the end-of-note interrupt has occurred. If the answer at 81 is negative, the program returns from interrupt at step 85. If a positive answer is obtained at 81, step 83 is accessed where the start-of-note interrupt is activated and, at step 84, the reset unit, which monitors the presence of a bill, is reset to be ready for determining the presence of bills. Subsequently, the program returns from interrupt at step 85.

Referring now to FIGS. 4A and 4B there are shown, respectively, routines for starting the STARTA2D routine and the digitizating routine itself. In FIG. 4A, the initiation of the STARTA2D routine at step 90 causes the sample pointer, which provides an indication of the sample being obtained and digitized at a given time, to be initialized. Subsequently, at step 91, the particular channel on which the analog-to-digital conversion is to be performed is enabled. The interrupt authorizing the digitization of the first sample is enabled at step 92 and the main program accessed again at step 93.

FIG. 4B is a flow chart illustrating the sequential procedure involved in the analog-to-digital conversion routine, which is designated as "A2D". The routine is started at step 100. Next, the sample pointer is decremented at step 101 so as to maintain an indication of the number of samples remaining to be obtained. At step 102, the digital data corresponding to the output of the photodetector for the current sample is read. The data is converted to its final form at step 103 and stored within a pre-defined memory segment as X_{IN}.

Next, at step 105, a check is made to see if the desired fixed number of samples "N" has been taken. If the answer is found to be negative, step 106 is accessed where the interrupt authorizing the digitization of the succeeding sample is enabled and the program returns from interrupt at step 107 for completing the rest of the digitizing process. However, if the answer at step 105 is found to be positive, i.e., the desired number of samples have already been obtained, a flag indicating the same is set at step 108 and the program returns from interrupt at step 109.

Referring now to FIG. 5, there is shown the sequential procedure involved in executing the routine, designated as "EXEC", which performs the mathematical steps involved in the correlation process. The routine is started at step 110. At step 111, all interrupts are disabled while CPU initialization occurs. At step 112, any constants associated with the sampling process are set and, at step 113, communications protocols, if any, for exchange of processed data and associated results, bad rates, interrupt masks, etc. are defined.

At step 114, the reset unit indicating the presence of a bill is reset for detecting the presence of the first bill to be scanned. At step 115, the start-of-note interrupt is enabled to put the system on the look out for the first incoming bill. Subsequently, at step 116, all other related interrupts are also enabled since, at this point,

the initialization process has been completed and the system is ready to begin scanning bills. A check is made at step 117 to see if, in fact, all the desired number of samples have been obtained. If the answer at step 117 is found to be negative the program loops until a positive answer is obtained. At that time, step 118 is accessed where a flag is set to indicate the initiation of the correlation procedure.

In accordance with this invention, a simple correlation procedure is utilized for processing digitized reflectance values into a form which is conveniently and accurately compared to corresponding values prestored in a identical format. More specifically, as a first step, the mean value $\overline{X}$ for the set of digitized reflectance samples (comparing "n" samples) obtained for a bill scan run is first obtained as below:

$$X = \sum_{i=0}^{n} \frac{X_i}{n} \quad (1)$$

Subsequently, a normalizing factor Sigma "σ" is determined as being equivalent to the sum of the square of the difference between each sample and the mean, as normalized by the total number of samples. More specifically, the normalizing factor is calculated as below:

$$\sigma = \sum_{i=0}^{n} \frac{|X_i - X|^2}{n} \quad (2)$$

In the final step, each reflectance sample is normalized by obtaining the difference between the sample and the above-calculated mean value and dividing it by the square root of the normalizing factor Sigma "σ" as defined by the following equation:

$$X_n = \frac{X_i - X}{(\sigma)^{1/2}} \quad (3)$$

The result of using the above correlation equations is that, subsequent to the normalizing process, a relationship of correlation exists between a test pattern and a master pattern such that the aggregate sum of the products of corresponding samples in a test pattern and any master pattern, when divided by the total number of samples, equals unity if the patterns are identical. Otherwise, a value less than unity is obtained. Accordingly, the correlation number or factor resulting from the comparison of normalized samples within a test pattern to those of a stored master pattern provides a clear indication of the degree of similarity or correlation between the two patterns.

According to a preferred embodiment of this invention, the fixed number of reflectance samples which are digitized and normalized for a bill scan is selected to be 64. It has experimentally been found that the use of higher binary orders of samples (such as 128, 256, etc.) does not provide a correspondingly increased discrimination efficiency relative to the increased processing time involved in implementing the above-described correlation procedure. It has also been found that the use of a binary order of samples lower than 64, such as 32, produces a substantial drop in discrimination efficiency.

The correlation factor can be represented conveniently in binary terms for ease of correlation. In a preferred embodiment, for instance, the factor of unity which results when hundred percent correlation exists is represented in terms of the binary number 2^{10}, which is equal to a decimal value of 1024. Using the above procedure, the normalized samples within a test pattern are compared to each of the 28 master characteristic patterns stored within the system memory in order to determine the particular stored pattern to which the test pattern most corresponds by identifying the comparison which yields a correlation number closest to 1024.

According to a feature of this invention, a bi-level threshold of correlation is required to be satisfied before a particular call is made. More specifically, the correlation procedure is adapted to identify the two highest correlation numbers resulting from the comparison of the test pattern to one of the stored patterns. At that point, a minimum threshold of correlation is required to be satisfied by these two correlation numbers. It has experimentally been found that a correlation number of about 800 serves as a good cut-off threshold above which positive calls may be made with a high degree of confidence and below which the designation of a test pattern as corresponding to any of the stored patterns is uncertain. As a second thresholding level, a minimum separation is prescribed between the two highest correlation numbers before making a call. This ensures that a positive call is made only when a test pattern does not correspond, within a given range of correlation, to more than one stored master pattern. Preferably, the minimum separation between correlation numbers is set to be between 100-150.

Returning now to FIG. 5, the correlation procedure is initiated at step 119 where a routine designated as "PROCESS" is accessed. The procedure involved in executing this routine is illustrated at FIG. 6A which shows the routine starting at step 130. At step 131, the mean X is calculated on the basis of Equation (1). At step 132 the sum of the squares is calculated in accordance with Equation (2). At step 133, the digitized values of the reflectance samples, as represented in integer format, are converted to floating point format for further processing. At step 134, a check is made to see if all samples have been processed and if the answer is found to be positive, the routine ends at step 135 and the main program is accessed again. If the answer at step 134 is found to be negative, the routine returns to

step 132 where the above calculations are repeated.

At the end of the routine PROCESS, the program returns to the routine EXEC at step 120 where the flag indicating that all digitized reflectance samples have been processed is reset. Subsequently, at step 121, a routine designated as "SIGCAL" is accessed. The procedure involved in executing this routine is illustrated at FIG. 6B which shows the routine starting at step 140. At step 141, the square root of the sum of the squares, as calculated by the routine PROCESS, is calculated in accordance with Equation (2). At step 142, the floating point values calculated by the routine PROCESS are normalized in accordance with Equation (3) using the calculated values at step 141. At step 143, a check is made to see if all digital samples have been processed. If the answer at step 143 is found to be negative, the program returns to step 142 and the conversion is continued until all samples have been processed. At that point, the answer at step 143 is positive and the routine returns to the main program at step 144.

Returning to the flow chart of FIG. 5, the next step to be executed is step 122 where a routine designated as "CORREL" is accessed. The procedure involved in executing this routine is illustrated at FIG. 7 which shows the routine starting at 150. At step 151, correlation results are initialized to zero and, at step 152, the test pattern is compared to the first one of the stored master patterns. At step 153, the first call corresponding to the highest correlation number obtained up to that point is determined. At step 154, the second call corresponding to the second highest correlation number obtained up to that point is determined. At step 155, a check is made to see if the test pattern has been compared to all master patterns. If the answer is found to be negative, the routine reverts to step 152 where the comparison procedure is reiterated. When all master patterns have been compared to the test pattern, step 155 yields a positive result and the routine returns to the main program at step 156.

Returning again to FIG. 5, at step 123, a flag indicating that the correlation procedure has been completed is reset and step 124 is accessed where a routine designated as "SEROUT" is initiated. It should be noted that steps 118 and 123, which are directed to the setting and resetting of the flag TP2, primarily function to provide a measure of the processing time involved in the overall correlation procedure. These steps can be dispensed with, if processing time is not being monitored. The procedure involved in executing the routine SEROUT is illustrated at FIG. 8 which shows the routine as starting at step 160. At step 161, the currency denomination corresponding to the first call is converted to ASCII format and displayed. At step 162, the correlation number corresponding to the first call is converted to ASCII format and displayed.

At step 163, the currency denomination corresponding to the second call is converted to ASCII format and displayed. At step 164, the correlation number corresponding to the second call is converted to ASCII format and displayed. Subsequently, the routine returns to the main program. At this point in the main program, the correlation procedure is completed and any related counting of identified denominations may be executed with the associated results also being displayed along with the corresponding calls and correlation numbers. After this correlation and display procedure is completed, the system is ready for initiating the process of scanning the next incoming currency bill.

It should be noted that, in implementing the optical sensing and correlation technique of this invention, separate microprocessor units may be provided for (i) accomplishing the sampling and correlation process and (ii) for controlling the general functions of the overall system. In such an implementation, the general processor unit would preferably be used for displaying the identified denominations and any associated counting results. With this approach, the routine SEROUT (FIG. 8) would merely involve the transmission of the bill denomination and call information from the sampling and correlation processor unit to the general processor unit for subsequent display.

Referring now to FIGS. 9A-C there are shown three test patterns generated, respectively, for the forward scanning of a $1 bill along its top face, the reverse scanning of a $2 bill on its top face, and the forward scanning of a $100 bill about its top face. It should be noted that, for purposes of clarity the test patterns in FIGS. 9A-C were generated by using 128 reflectance samples per bill scan, as opposed to the preferred use of only 64 samples. The marked difference existing between corresponding samples for these three test patterns is indicative of the high degree of confidence with which currency denominations may be called using the foregoing optical sensing and correlation procedure.

The optical sensing and correlation technique described above permits identification of pre-programmed currency denominations with a high degree of accuracy and is based upon a relatively low processing time for digitizing sampled reflectance values and comparing them to the master characteristic patterns. The approach is used to scan currency bills, normalize the scanned data and generate master patterns in such a way that bill scans during operation have a direct correspondence between compared sample points in portions of the bills which possess the most distinguishable printed indicia. A relatively low number of reflectance samples is required in order to be able to adequately distinguish between several currency denominations.

A major advantage with this approach is that it is not required that currency bills be scanned along their wide dimensions. Conventional systems have been forced to adopt the wide dimension scanning approach in order to obtain the larger number of samples typically required for accurate denomination discrimination. Further, the reduction in the number of samples reduces the processing time to such an extent that additional

comparisons can be made during the time available between the scanning of successive bills. More specifically, as described above, it becomes possible to compare a test pattern with at least four stored master characteristic patterns so that the system is made capable of identifying currency which is scanned in the "forward" or "reverse" directions along the "top" or "bottom" surfaces of bills.

Another advantage accruing from the reduction in processing time realized by the present sensing and correlation scheme is that the response time involved in either stopping the transport of a bill that has been identified as "spurious", i.e., not corresponding to any of the stored master characteristic patterns, or diverting such a bill to a separate stacker bin, is correspondingly shortened. Accordingly, the system can conveniently be programmed to set a flag when a scanned pattern does not correspond to any of the master patterns. The identification of such a condition can be used to stop the drive bill transport motor for the mechanism. Since the optical encoder is tied to the rotational movement of the drive motor, synchronism can be maintained between pre- and post-stop conditions. In the dual-processor implementation discussed above, the information concerning the identification of a "spurious" bill would be included in the information relayed to the general processor unit which, in turn, would control the drive motor appropriately.

The correlation procedure and the accuracy with which a denomination is identified directly relates to the degree of correspondence between reflectance samples on the test pattern and corresponding samples on the stored master patterns. Thus, shrinkage of "used" bills which, in turn, causes a corresponding reduction in their narrow dimension, can possibly produce a drop in the degree of correlation between such used bills of a given denomination and the corresponding master patterns. Currency bills which have experienced a high degree of usage exhibit such a reduction in both the narrow and wide dimensions of the bills. While the sensing and correlation technique of this invention remains relatively independent of any changes in the wide dimension of bills, reduction along the narrow dimension can affect correlation factors by realizing a relative displacement of reflectance samples obtained as the "shrunk" bills are transported across the scanhead.

In order to accommodate or nullify the effect of such narrow dimension shrinking, the above-described correlation technique can be modified by use of a progressive shifting approach whereby a test pattern which does not correspond to any of the master patterns is partitioned into predefined sections, and samples in successive sections are progressively shifted and compared again to the stored patterns in order to identify the denomination. It has experimentally been determined that such progressive shifting effectively counteracts any sample displacement resulting from shrinkage of a bill along its narrow dimension.

The progressive shifting effect is best illustrated by the correlation patterns shown in FIGS. 10A-D. For purposes of clarity, the illustrated patterns were generated using 128 samples for each bill scan as compared to the preferred use of 64 samples. FIG. 10A shows the correlation between a test pattern (represented by a heavy line) and a corresponding master pattern (represented by a thin line). It is clear from FIG. 10A that the degree of correlation between the two patterns is relatively low and exhibits a correlation factor of 606.

The manner in which the correlation between these patterns is increased by employing progressive shifting is best illustrated by considering the correlation at the reference points designated as A-E along the axis defining the number of samples. The effect on correlation produced by "single" progressive shifting is shown in FIG. 10B which shows "single" shifting of the test pattern of FIG. 10A. This is affected by dividing the test pattern into two equal segments each comprising 64 samples. The first segment is retained without any shift, whereas the second segment is shifted by a factor of one data sample. Under these conditions, it is found that the correlation factor at the reference points located in the shifted section, particularly at point E, is improved.

FIG. 10C shows the effect produced by "double" progressive shifting whereby sections of the test pattern are shifted in three stages. This is accomplished by dividing the overall pattern into three approximately equal sized sections. Section one is not shifted, section two is shifted by one data sample (as in FIG. 10B), and section three is shifted by a factor of two data samples. With "double" shifting, it can be seen that the correlation factor at point E is further increased.

On a similar basis, FIG. 10D shows the effect on correlation produced by "triple" progressive shifting where the overall pattern is first divided into four (4) approximately equal sized sections. Subsequently, section one is retained without any shift, section two is shifted by one data sample, section three is shifted by two data samples, and section four is shifted by three data samples. Under these conditions, the correlation factor at point E is seen to have increased again.

FIG. 10E shows the effect on correlation produced by "quadruple" shifting, where the pattern is first divided into five (5) approximately equal sized sections. The first four (4) sections are shifted in accordance with the "triple" shifting approach of FIG. 10D, whereas the fifth section is shifted by a factor of four (4) data samples. From FIG. 10E it is clear that the correlation at point E is increased almost to the point of superimposition of the compared data samples.

The advantage of using the progressive shifting approach, as opposed to merely shifting by a set amount of data samples across the overall test pattern, is that the improvement in correlation achieved in the initial sections of the pattern as a result of shifting is not neutralized or offset by any subsequent shifts in the test pattern. It is apparent from the above figures that the

degree of correlation for sample points falling within the progressively shifted sections increases correspondingly.

More importantly, the progressive shifting realizes substantial increases in the overall correlation factor resulting from pattern comparison. For instance, the original correlation factor of 606 (FIG. 10A) is increased to 681 by the "single" shifting shown in FIG. 10B. The "double" shifting shown in FIG. 10C increases the correlation number to 793, the "triple" shifting of FIG. 10D increases the correlation number to 906, and, finally, the "quadruple" shifting shown in FIG. 10E increases the overall correlation number to 960. Using the above approach, it has been determined that used currency bills which exhibit a high degree of narrow dimension shrinkage and which cannot be accurately identified as belonging to the correct currency denomination when the correlation is performed without any shifting, can be identified with a high degree of certainty by using progressive shifting approach, preferably by adopting "triple" or "quadruple" shifting.

Referring now to FIG. 11, there is shown apparatus 210 for currency discrimination and counting which embodies the principles of the present invention. The apparatus comprises a housing 212 which includes left and right hand sidewalls 214 and 216, respectively, a rear wall 218, and a top surface generally designated as 220. The apparatus has a front section 222 which comprises a generally vertical forward section 224 and a forward sloping section 225 which includes side sections provided with control panels 226A and 226B upon which various control switches for operating the apparatus, as well as associated display means, are mounted.

For accepting a stack of currency bills 228 which have to be discriminated according to denomination, an input bin 227 is defined on the top surface 220 by a downwardly sloping support surface 229 on which are provided a pair of vertically disposed side walls 230, 232 linked together by a vertically disposed front wall 234. The walls 230, 232 and 234, in combination with the sloping surface 229, define an enclosure where the stack of currency bills 228 is positioned.

From the input bin, currency bills are moved along a tri-sectional transport path which includes an input path where bills are moved along a first direction in a substantially flat position, a curved guideway where bills are accepted from the input path and guided in such a way as to change the direction of travel to a second different direction, and an output path where the bills are moved in a flat position along the second different direction across currency discrimination means located downstream of the curved guideway, as will be described in detail below. In accordance with the improved optical sensing and correlation technique of this invention, the transport path is defined in such a way that currency bills are accepted, transported along the input path, the curved guideway, and the output path, and stacked with the narrow dimension "W" of the bills being maintained parallel to the transport path and the direction of movement at all times.

The forward sloping section 225 of the document handling apparatus 210 includes a platform surface 235 centrally disposed between the side walls 214, 216 and is adapted to accept currency bills which have been processed through the currency discrimination means for being delivered to a stacker plate 242 where the processed bills are stacked for subsequent removal. More specifically, the platform 235 includes an associated angular surface 236 and is provided with openings 237, 237A from which flexible blades 238A, 240A of a corresponding pair of stacker wheels 238, 240, respectively, extend outwardly. The stacker wheels are supported for rotational movement about a stacker shaft 241 disposed about the angular surface 236 and suspended across the side walls 214 and 216. The flexible blades 238A, 240A of the stacker wheels cooperate with the stacker platform 235 and the openings 237, 237A to pick up currency bills delivered thereto. The blades operate to subsequently deliver such bills to a stacker plate 242 which is linked to the angular surface 236 and which also accommodates the stacker wheel openings and the wheels projecting therefrom. During operation, a currency bill which is delivered to the stacker platform 235 is picked up by the flexible blades and becomes lodged between a pair of adjacent blades which, in combination, define a curved enclosure which decelerates a bill entering therein and serves as a means for supporting and transferring the bill from the stacker platform 235 onto the stacker plate 242 as the stacker wheels rotate. The mechanical configuration of the stacker wheels and the flexible blades provided thereupon, as well as the manner in which they cooperate with the stacker platform and the stacker plate, is conventional and, accordingly, is not described in detail herein.

The bill handling and counting apparatus 210 is provided with means for picking up or "stripping" currency bills, one at a time, from bills that are stacked in the input bin 227. In order to provide this stripping action, a feed roller 246 is rotationally suspended about a drive shaft 247 which, in turn, is supported across the side walls 214, 216. The feed roller 246 projects through a slot provided on the downwardly sloping surface 229 of the input bin 227 which defines the input path and is in the form of an eccentric roller at least a part of the periphery of which is provided with a relatively high friction-bearing surface 246A. The surface 246A is adapted to engage the bottom bill of the bill stack 228 as the roller 246 rotates; this initiates the advancement of the bottom bill along the feed direction represented by the arrow 247B (see FIG. 13). The eccentric surface of the feed roller 246 essentially "jogs" the bill stack once per revolution so as to agitate and loosen the bottom currency bill within the stack, thereby facilitating the advancement of the bottom bill along the feed direction.

The action of the feed roller 246 is supplemented by the provision of a capstan or drum 248 which is sus-

pended for rotational movement about a capstan drive shaft 249 which, in turn, is supported across the side walls 214 and 216. Preferably, the capstan 248 comprises a centrally disposed friction roller 248A having a smooth surface and formed of a friction-bearing material such as rubber or hard plastic. The friction roller is sandwiched between a pair of capstan rollers 248B and 248C at least a part of the external periphery of which are provided with a high friction-bearing surface 248D.

The friction surface 248D is akin to the friction surface 246A provided on the feed roller and permits the capstan rollers to frictionally advance the bottom bill along the feed direction. Preferably, the rotational movement of the capstan 248 and the feed roller 246 is synchronized in such a way that the frictional surfaces provided on the peripheries of the capstan and the feed roller rotate in unison, thereby inducing complimentary frictional contact with the bottom bill of the bill stack 228.

In order to ensure active contact between the capstan 248 and a currency bill which is jogged by the feed roller 246 and is in the process of being advanced picker rollers 252A, 252B, are provided for exerting a consistent downward force onto the leading edges of the currency bills stationed in the input bin 227. The picker rollers are supported on corresponding picker arms 254A, 254B which, in turn, are supported for arcuate movement about a support shaft 256 suspended across the side walls of the apparatus. The picker rollers are free wheeling about the picker arms and when there are no currency bills in contact with the capstan 248, bear down upon the friction roller 248A and, accordingly, are induced into counter-rotation therewith. However, when currency bills are present and are in contact with the capstan 248, the picker rollers bear down into contact with the leading edges of the currency bills and exert a direct downward force on the bills since the rotational movement of rollers is inhibited. The result is that the advancing action brought about by contact between the friction-bearing surfaces 248D on the capstan rollers 248B, 248C is accentuated, thereby facilitating the stripping away of a single currency bill at a time from the bill stack 228.

In between the picker arms 254A, 254B, the support shaft 256 also supports a separator arm 260 which carries at its end remote from the shaft a stationary stripper shoe 258 which is provided with a frictional surface which imparts a frictional drag upon bills onto which the picker rollers bear down. The separator arm is mounted for arcuate movement about the support shaft 256 and is spring loaded in such a way as to bear down with a selected amount of force onto the capstan.

In operation, the picker rollers rotate with the rotational movement of the friction roller 248A due to their free wheeling nature until the leading edges of one or more currency bills are encountered. At that point, the rotational movement of the picker rollers stops and the leading edges of the bills are forced into positive contact with the friction bearing surfaces on the periphery of the capstan rollers. The effect is to force the bottom bill away from the rest of the bills along the direction of rotation of the capstan. At the same time, the separator shoe 258 also bears down on any of the bills that are propelled forward by the capstan rollers.

The tension on the picker arm 254A is selected to be such that the downward force exerted upon such a propelled bill allows only a single bill to move forward. If two or more bills happen to be propelled out of the contact established between the picker rollers and the capstan rollers, the downward force exerted by the spring loaded shoe should be sufficient to inhibit further forward movement of the bills. The tension under which the picker arm is spring loaded can be conveniently adjusted to control the downward bearing force exerted by the shoe in such a way as to compliment the bill stripping action produced by the picker rollers and the capstan rollers. Thus, the possibility that more than two bills may be propelled forward at the same time due to the rotational movement of the capstan is significantly reduced.

The bill transport path includes a curved guideway 270 provided in front of the capstan 248 for accepting currency bills that have been propelled forward along the input path defined by the forward section of the sloping surface 229 into frictional contact with the rotating capstan. The guideway 270 includes a curved section 272 which corresponds substantially to the curved periphery of the capstan 248 so as to compliment the impetus provided by the capstan rollers 248B, 248C to a stripped currency bill.

A pair of idler rollers 262A, 262B is provided downstream of the picker rollers for guiding bills propelled by the capstan 248 into the curved guideway 270. More specifically, the idler rollers are mounted on corresponding idler arms 264A, 264B which are mounted for arcuate movement about an idler shaft 266 which, in turn, is supported across the side walls of the apparatus. The idler arms are spring loaded on the idler shaft so that a selected downward force can be exerted through the idler rollers onto a stripped bill, thereby ensuring continued contact between the bill and the capstan 248 until the bill is guided into the curved section 272 of the guideway 270.

Downstream of the curved section 272, the bill transport path has an output path for currency bills. The output path is provided in the form of a flat section 274 along which bills which have been guided along the curved guideway 270 by the idler rollers 262A, 262B are moved along a direction which is opposite to the direction along which bills are moved out of the input bin. The movement of bills along the direction of rotation of the capstan, as induced by the picker rollers 252A, 252B and the capstan rollers 248B, 248C, and the guidance provided by the section 272 of the curved guideway 270 changes the direction of movement of the currency bills from the initial movement along the sloping surface 229 of input bin 227 (see arrow 247B in FIG. 13) to a direc-

tion along the flat section 274 of the output path, as best illustrated in FIG. 13 by the arrow 272B.

Thus, a currency bill which is stripped from the bill stack in the input bin is initially moved along the input path under positive contact between the picker rollers 252A, 252B and the capstan rollers 248B, 248C. Subsequently, the bill is guided through the curved guideway 270 under positive contact with the idler rollers 262A, 262B onto the flat section 274 of the output path.

In the output path, currency bills are positively guided along the flat section 274 by means of a transport roller arrangement which includes a plurality of axially spaced, positively driven transport rollers 282A, 284A, 286A which are disposed on a transport shaft 287 supported across the side walls of the apparatus. The flat section is provided with openings through which at least two of the transport rollers, specifically rollers 282A and 284A, project into counter-rotating contact with corresponding freewheeling passive rollers 292A, 294A. The passive rollers are mounted on a support shaft 295 supported between the side walls of the apparatus below the flat section 274 of the output path. The passive transport rollers 292A, 294A are spring-loaded into counter-rotating contact with the active transport rollers 282A, 284A, 286A and the points of contact are made coplanar with the output path so that currency bills can be moved along the path in a flat manner under the positive contact of the opposingly disposed active and passive rollers. A similar set of active transport rollers 282B, 284B, 286B and opposing spring-loaded passive transport rollers 292B, 294B are provided downstream of the first set of transport rollers at a distance which is just short of the length of the narrow dimension of the currency bills that are to be discriminated. Further, the distance between the idler rollers 262A, 262B and the first set of transport rollers is selected to be such that a currency bill which is guided along the curved guideway 259 is pulled into contact between the first set of active and passive transport rollers just before the bill moves away from the positive contact between the idler rollers 262A, 262B and the capstan 248.

The active transport rollers are driven at a speed substantially higher than that of the capstan rollers. Since the passive rollers are freewheeling and the active rollers are positively driven, the first set of transport rollers cause a bill that comes in between the rollers along the flat section of the output path to be pulled into the nip formed between the active and passive rollers. The higher speed of the active transport rollers imparts an abrupt acceleration to the bill; this acceleration functions to separate or strip the bill away from any other bills that may have been guided into the curved guideway along with the bill being acted upon by the transport rollers.

Downstream of the first set of transport rollers, currency bills are moved along the flat section into the nip formed between the second set of active and passive transport rollers, which are driven at the same speed as that of the first set of transport rollers. Preferably, the opposing sets of active transport rollers 282A-282B, 284A-284B, and 286A-286B are linked together by a belt 290 so that the positive rotating action of the transport shaft 287 is imparted to the rollers carried on the second transport shaft 288. The disposition of the second set of transport rollers is such that the positive contact exerted by the rollers on a currency bill moving along the output path occurs before the bill is released from the positive contact between the first set of transport rollers. The second set of transport rollers, thus, positively guides a currency bill onto the stacker platform 235 from where the stacker wheels 238, 240 pick up the bill and deposit it onto the stacker plate 242.

Referring now in particular to FIGS. 14 and 15, there are shown side and top views, respectively, of the document processing apparatus of FIGS. 11-13, which illustrate the mechanical arrangement for driving the various means for transporting currency bills along the three sections of the transport path, i.e., along the input path, the curved guideway and the output path. As shown therein, a motor 300 is used to impart rotational movement to the capstan shaft 249 by means of a belt/pulley arrangement comprising a pulley 310 provided on the capstan shaft 249 and which is linked to a pulley 304 provided on the motor drive shaft through a belt 306. The diameter of the driver pulley 310 is selected to be appropriately larger than that of the motor pulley 304 in order to achieve the desired speed reduction from the typically high speed at which the motor 300 operates.

The drive shaft 247 for the drive roller 246 is provided with rotary motion by means of a pulley 308 provided thereupon which is linked to a corresponding pulley 310 provided on the capstan shaft 249 through a belt 312. The pulleys 308 and 310 are of the same diameter so that the drive roller shaft 247 and, hence, the drive roller 246, rotate in unison with the capstan 248 mounted on the capstan shaft 249.

In order to impart rotational movement to the transport rollers, a pulley 314 is mounted on the transport roller shaft 287 corresponding to the first set of transport rollers and is linked to a corresponding pulley 316 on the capstan shaft 249 through a belt 318. The diameter of the transport roller pulley 314 is selected to be appropriately smaller than that of the corresponding capstan pulley 316 so as to realize a stepping-up in speed from the capstan rollers to the transport rollers. The second set of transport rollers mounted on the transport roller shaft 288 is driven at the same speed as the rollers on the first set of transport rollers by means of a pulley 320 which is linked to the transport pulley 314 by means of a belt 322.

As also shown in FIGS. 14 and 15, an optical encoder 299 is mounted on one of the transport roller shafts, preferably the passively driven transport shaft 288, for precisely tracking the lateral displacement of

bills supported by the transport rollers in terms of the rotational movement of the transport shafts, as discussed in detail above in connection with the optical sensing and correlation technique of this invention.

In order to drive the stacker wheels 238, 240 an intermediate pulley 322 is mounted on suitable support means (not shown) and is linked to a corresponding pulley 324 provided on the capstan shaft 249 through a belt 326. Because of the time required for transporting currency bills which have been stripped from the currency stack in the input bin through the tri-sectional transport path and onto the stacker platform, the speed at which the stacker wheels can rotate for delivering processed bills to the stacker plate is necessarily less than that of the capstan shaft. Accordingly, the diameter of the intermediate pulley 322 is selected to be larger than that of the corresponding capstan pulley 324 so as to realize a reduction in speed. The interim pulley 322 has an associated pulley 328 which is linked to a stacker pulley 330 provided on the drive shaft 241 for the stacker wheels 238, 240 by means of a belt 332. In the preferred embodiment shown in FIGS. 11-15, the stacker wheels 238, 240 rotate in the same direction as the capstan rollers. This is accomplished by arranging the belt 332 between the pulleys 328, 330 in a "Figure-8" configuration about an anchoring pin 333 disposed between the two pulleys.

The curved section 272 of the guideway 270 is provided on its underside with an optical sensor arrangement 299, including an LED 298, for performing standard currency handling operations such as counterfeit detection using conventional techniques, doubles detection, length detection, skew detection, etc. However, unlike conventional arrangements, currency discrimination according to denomination is not performed in this area, for reasons described below.

According to a feature of this invention, optical scanning of currency bills, in accordance with the above-described improved optical sensing and correlation technique, is performed by means of an optical scanhead 296 which is disposed downstream of the curved guideway 270 along the flat section 274 of the output path. More specifically, the scanhead 296 is located under the flat section of the output path between the two sets of transport rollers. The advantage of this approach is that optical scanning is performed on bills when they are maintained in a substantially flat position as a result of positive contact between the two sets of transport rollers at both ends of the bill along their narrow dimension.

It should be understood that the above-described drive arrangement is provided for illustrative purposes only. Alternate arrangements for imparting the necessary rotational movement to generate movement of currency bills along the tri-sectional transport path can be used just as effectively. It is important, however, that the surface speed of currency bills across the two sets of transport rollers be greater than the surface speed of the bills across the capstan rollers in order to achieve optimum bill separation. It is this difference in speed that generates the abrupt acceleration of currency bills as the bills come into contact with the first set of transport rollers.

The drive arrangement may also include a one-way clutch (not shown) provided on the capstan shaft and the capstan shafts, the transport roller shafts and the stacker wheel shafts may be fitted with fly-wheel arrangements (not shown). The combination of the one-way clutch and the fly wheels can be used to advantage in accelerated batch processing of currency bills by ensuring that any bills remaining in the transport path after currency discrimination are automatically pulled off the transport path into the stacker plate as a result of the inertial dynamics of the fly wheel arrangements.

As described above, implementation of the optical sensing and correlation technique of this invention requires only a relatively low number of reflectance samples in order to adequately distinguish between several currency denominations. Thus, highly accurate discrimination becomes possible even though currency bills are scanned along their narrow dimension. However, the accuracy with which a denomination is identified is based on the degree of correlation between reflectance samples on the test pattern and corresponding samples on the stored master patterns. Accordingly, it is important that currency bills be transported across the discrimination means in a flat position and, more importantly, at a uniform speed.

This is achieved in the bill handling apparatus of FIGS. 11-15, by positioning the optical scanhead 296 on one side of the flat section 274 of the output path between the two sets of transport rollers. In this area, currency bills are maintained in positive contact with the two sets of rollers, thereby ensuring that the bills move across the scanhead in a substantially flat fashion. Further, a uniform speed of bill movement is maintained in this area because the second set of passive transport rollers is driven at a speed identical to that of the active transport rollers by means of the belt connecting the two sets of rollers. Disposing the optical scanhead 296 in such a fashion downstream of the curved guideway 270 along the flat section 274 maintains a direct correspondence between reflectance samples obtained by the optically scanning of bills to be discriminated and the corresponding samples in the stored master patterns.

According to a preferred embodiment, the optical scanhead comprises a plurality of light sources acting in combination to uniformly illuminate light strips of the desired dimension upon currency bills positioned on the transport path below the scanhead. As illustrated in FIG. 16, the scanhead 296 includes a pair of LEDs 340, 342, directing beams of light 340A and 340B, respectively, downwardly onto the flat section 274 of the output path against which the scanhead is positioned. The LEDs 340, 342 are angularly disposed relative to the vertical axis Y in such a way that their respective light

beams combine to illuminate the desired light strip 342.

The scanhead 296 includes a photodetector 346 centrally disposed directly above the strip for sensing the light reflected off the strip. The photodetector 346 is linked to a central processing unit (CPU)(not shown) for processing the sensed data in accordance with the above-described principles of this invention. Preferably, the beams of light 340A, 340B from the LEDs 340, 342, respectively, are passed through an optical mask 343 in order to realize the illuminated strips of the desired dimensions.

In order to capture reflectance samples with high accuracy, it is important that the photodetector capture reflectance data uniformly across the illuminated strip. In other words, when the photodetector 346 is positioned centrally above the light strip relative to the midpoint "0" thereof, the output of the photodetector, as a function of the distance from the central point "0" along the X axis, should optimally approximate a step function as illustrated by the curve A in FIG. 17. With the use of a single light source angularly displaced relative to the vertical, the variation in photodetector output typically approximates a Gaussian function, as illustrated by the curve B in FIG. 17.

In accordance with a preferred embodiment, the two LEDs 340 and 342 are angularly disposed relative to the vertical axis by angles α and β, respectively. The angles α and β are selected to be such that the resultant output of the photodetector is as close as possible to the optimum distribution curve A in FIG. 17. According to a preferred embodiment, the angles α and β are each selected to be 19.9 degrees. The photodetector output distribution realized by this arrangement is illustrated by the curve designated as "C" in FIG. 17 which effectively merges the individual Gaussian distributions of the light sources to yield a composite distribution which sufficiently approximates the optimum curve A.

The manner in which the plurality of light strips of different dimensions are generated by the optical scanhead by means of an optical mask is illustrated in FIG. 18. As shown therein, the optical mask 350 essentially comprises a generally opaque area 352 on which two slits 354 and 356 are defined for allowing light from the light sources to pass through so as to illuminate light strips of the desired dimensions. More specifically, slit 354 corresponds to the wide strip used for obtaining the reflectance samples which correspond to the characteristic pattern for a test bill. According to an illustrative embodiment, the wide slit 354 has a length of about .300" and a width of about .050". The second slit 356 is adapted to generate a relatively narrow illuminated strip used for detecting the thin borderline surrounding the printed indicia on currency bills, as described above in detail. According to the illustrative embodiment, the narrow slit 356 has a length of about .300" and a width of about .010".

It will be obvious that high precision machining would be required for precisely defining the slits. In practice, it becomes difficult to machine the narrow strip 356 on the optical mask 350. This problem is approached, according to a preferred embodiment, by defining the mask 350 in the form of separate sections 360 and 362. The section 360 has one edge machined to correspond to one half section 356A of the desired slit 356. The second section 362 has a corresponding edge machined to correspond to the other half 356B of the slit 356. When the two sections 360 and 362 are mechanically linked together, they effectively define the narrow strip 356. The advantage with this approach is that, the two halves 356A, 356B, which together define the strip 356, can be precisely defined since machining on the edges of the mask can be handled with much more precision than machining within the mask itself.

Claims

1. An improved method for discriminating between currency bills of different denominations comprising the steps of:

   illuminating a predetermined section of a currency bill by focusing at least one light strip thereupon;

   detecting the light reflected off said illuminated section of said bill to generate an analog reflectance signal;

   generating relative lateral displacement between said light strip and said currency bill so as to illuminate or optically scan successive sections of said bill along a predetermined dimension thereof;

   obtaining a series of analog reflectance signals corresponding to light reflected from each of said successive bill sections;

   processing said series of analog reflectance signals to yield a set of data samples which, in combination, represent a data pattern characteristic of the currency denomination of said bill;

   generating and storing a set of master characteristic patterns corresponding to optical scanning of original bills of each of the different currency denominations to be discriminated ; and

   comparing the characteristic pattern for a scanned currency bill to each of said stored master patterns to determine the degree of correlation therebetween, and thereby to identify the denomination of said currency bill.

2. The improved currency discrimination method as set forth in claim 1, wherein said light strip is a strip of coherent light, and wherein said series of analog reflectance signals are digitized.

3. The improved currency discrimination method as set forth in claim 2, wherein said relative lateral displacement between said strip of coherent light and said currency bill is realized by holding the light strip stationary while moving the currency bill across the strip so that said series of reflectance signals is obtained across said predefined dimension of said bill.

4. The improved currency discrimination method of one of claims 1 to 3, wherein each currency bill has top and bottom surfaces and the movement of each bill across said strip results in optical scanning of said bill across said predefined dimension either along a "forward" or "backward" direction, and wherein four master characteristic patterns are generated and stored for each currency denomination to be discriminated, said patterns corresponding respectively to those generated by optically scanning a bill across said top and bottom surfaces along said forward and backward directions of scanning.

5. The improved currency discrimination method of one of claims 1 to 4, wherein said currency bills have a wide dimension and a narrow dimension and said reflectance signals are obtained by optically scanning each bill across its narrow dimension.

6. The improved currency discrimination method of claim 5, wherein at least 64 analog reflectance signals are obtained as each currency bill is scanned across its narrow dimension.

7. The improved currency discrimination method of one of claims 1 to 6, wherein said currency bills have printed indicia on said top and bottom surfaces, said indicia being enclosed within a borderline defined thereupon said that the bill surface outside the borderline is substantially blank, and wherein said series of analog signals representing a characteristic pattern for a bill are obtained from the bill surface enclosed within said borderline.

8. The improved currency discrimination method of claim 7, wherein a first relatively narrow strip of coherent light is used to detect said borderline as the currency bill moves across said strip by detecting the difference in magnitude of the reflectance signal obtained from the bill surface outside said borderline and the reflectance signal obtained about said borderline itself, and wherein a second relatively wide strip of coherent light is used to obtain said reflectance signals representing said characteristic patterns after said borderline has been detected.

9. The improved currency discrimination method of one of claims 1 to 8, wherein, following said step of determining the degree of correlation between the characteristic pattern for a scanned currency file and each of said stored master patterns, said scanned bill is positively identified as having the denomination corresponding to the stored master pattern for which the degree of correlation is found to be the highest and at least equal to a predefined correlation threshold.

10. The improved currency discrimination method of one of claims 1 to 9, wherein any scanned bill which is not positively identified as having a particular currency denomination is defined as having an unidentifiable denomination.

11. The improved currency discrimination method of one of claims 1 to 10, wherein the central portion of the narrow dimension of the currency bill is scanned.

12. The improved currency discrimination method of claim 11, wherein the central portion is approximately two inches wide.

13. The improved currency discrimination method of one of claims 1 to 12, wherein the determination of the degree of correlation includes a progressive shifting approach whereby a test pattern which does not correspond to any of the master patterns is partitioned into predefined sections, and samples in successive sections are progressively shifted and compared again to the stored patterns in order to identify the denomination.

14. A document evaluation device for receiving a stack of documents and rapidly evaluating all the documents ins the stack, said device comprising:

a document accepting station (12) for receiving a stack of documents to be evaluated;

a document stacking unit (20) for receiving said documents after said documents have been evaluated;

a transport mechanism (16) for transporting said documents, one at a time, from said accepting station (12) to said stacking unit (20) along a transport path;

a discriminating unit (18, 30) for evaluating said

documents, said discrimination unit (10, 20) including a detector (26) positioned along said transport path between said accepting station (12) and said stacking unit (20), said discriminating unit (18, 30) comparing actual data obtained by said detector (26) to predetermined data.

15. A document evaluation device as claimed in claim 14, said device comprising:

means for flagging a document meeting of failing to meet certain criteria.

16. A document evaluation device as claimed in claim 14 or 15, wherein the transport path includes a curved guideway changing the direction of movement of the document.

17. A document evaluation device as claimed in one of claims 14 to 16 wherein said detector (18) includes at least one light source (22) illuminating a predetermined portion of said document and a photodetector (26) sensing reflected light of said illuminated portion.

18. A document evaluation device as claimed in one of claims 14 to 17 wherein an optical encoder (32) is connected to said transport mechanism (16).

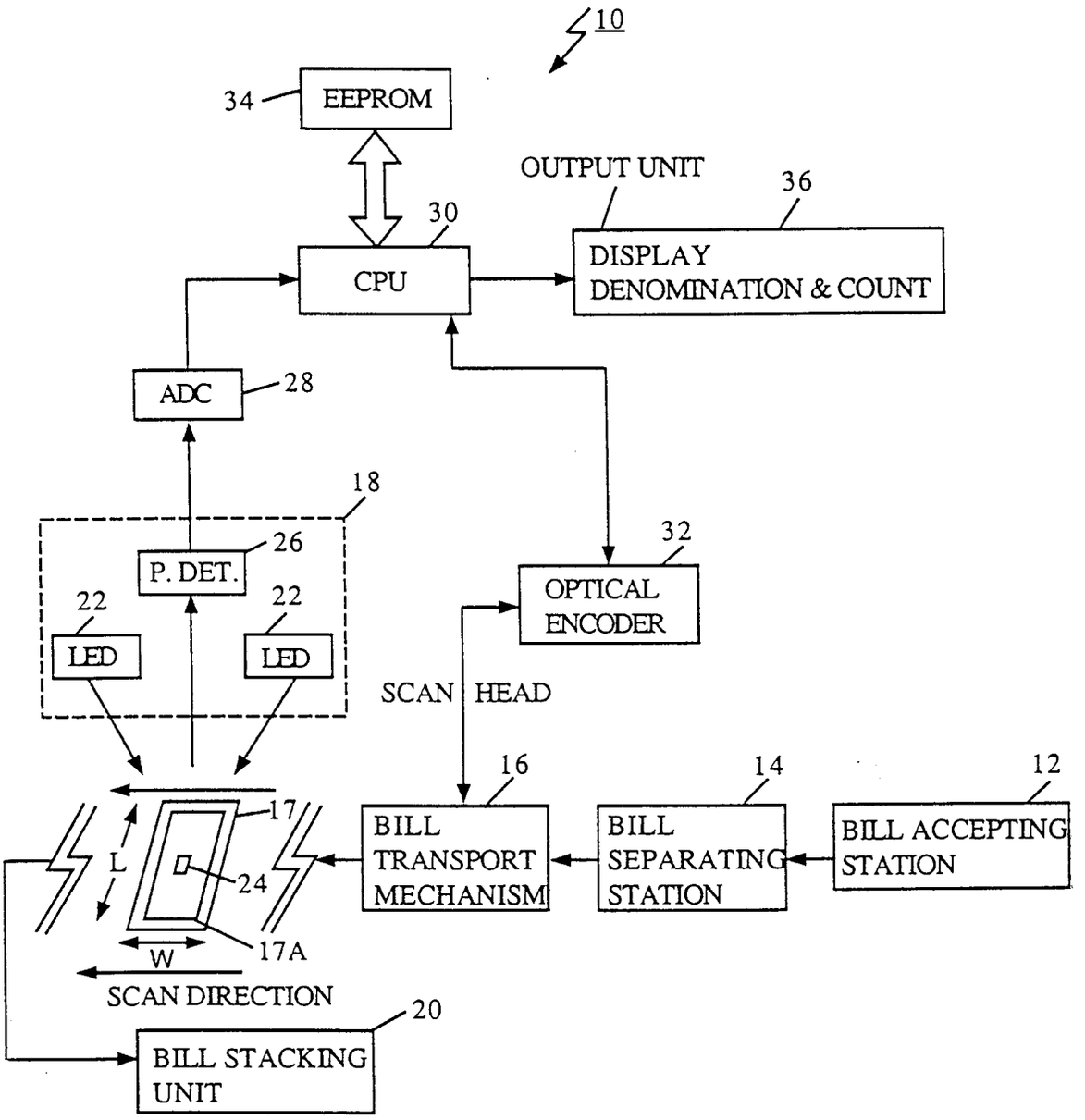
10
34
EEPROM
OUTPUT UNIT
36
30
CPU
DISPLAY
DENOMINATION & COUNT
ADC
28
18
26
P. DET.
32
OPTICAL
ENCODER
22
22
LED
LED
SCAN HEAD
16
14
12
17
BILL
TRANSPORT
MECHANISM
BILL
SEPARATING
STATION
BILL ACCEPTING
STATION
L
24
17A
W
SCAN DIRECTION
20
BILL STACKING
UNIT

FIG. 1

FIG.2

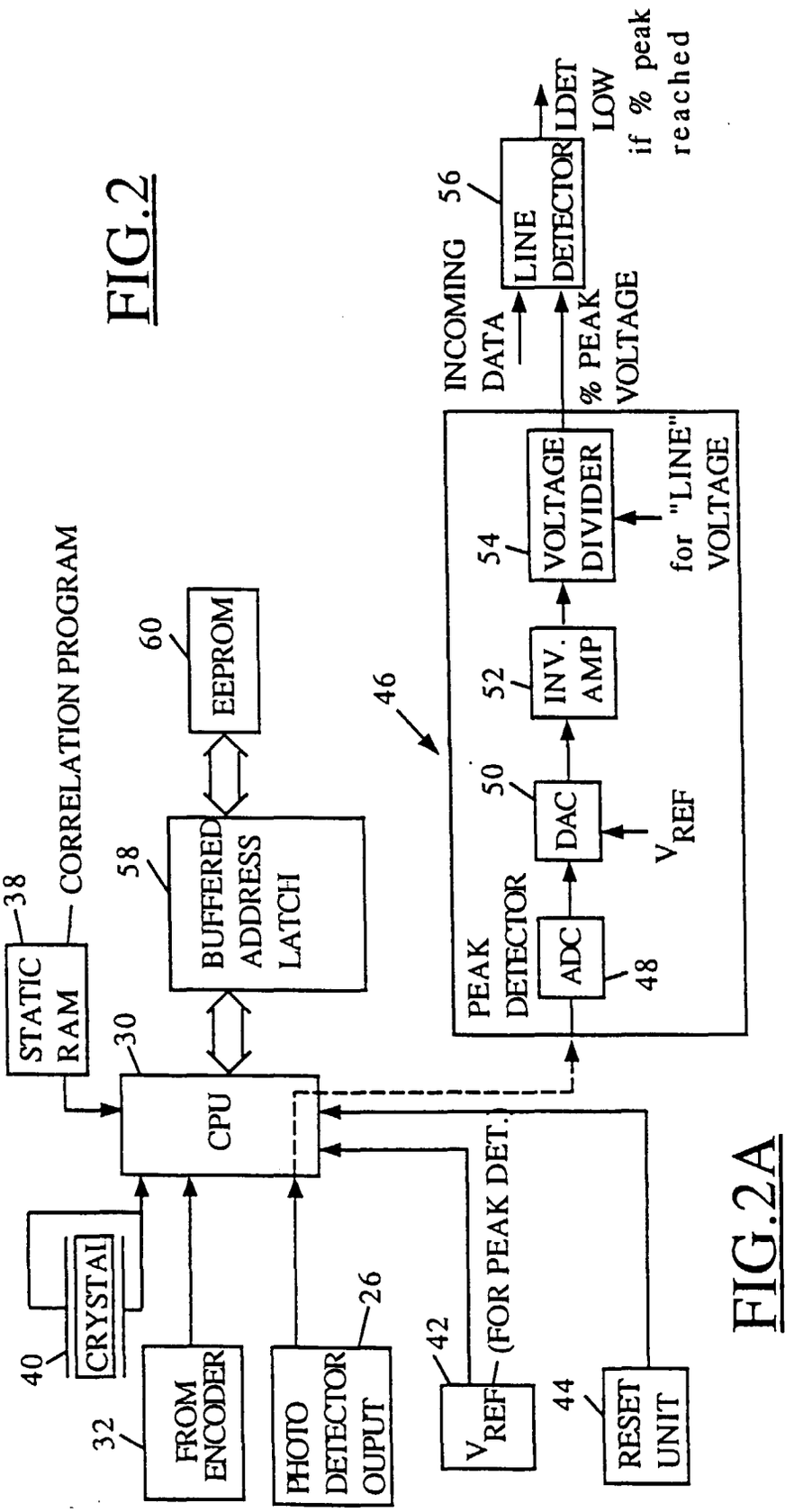
40
CRYSTAL
32
FROM ENCODER
PHOTO DETECTOR OUPUT
26
42
V_{REF} (FOR PEAK DET.)
44
RESET UNIT
STATIC RAM
38
CORRELATION PROGRAM
30
CPU
BUFFERED ADDRESS LATCH
58
60
EEPROM
46
PEAK DETECTOR
ADC
48
DAC
50
V_{REF}
INV. AMP
52
VOLTAGE DIVIDER
54
for "LINE" VOLTAGE
% PEAK VOLTAGE
INCOMING DATA
LINE DETECTOR
56
LDET LOW if % peak reached

FIG.2A

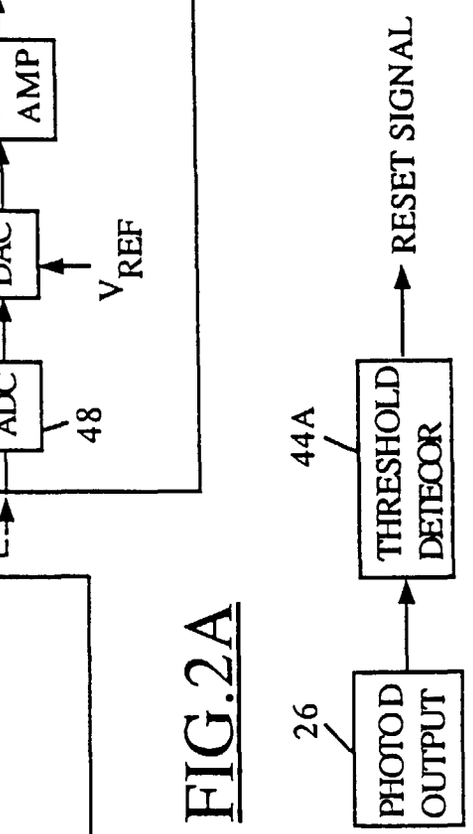
26
PHOTO D OUTPUT
44A
THRESHOLD DETECOR
RESET SIGNAL

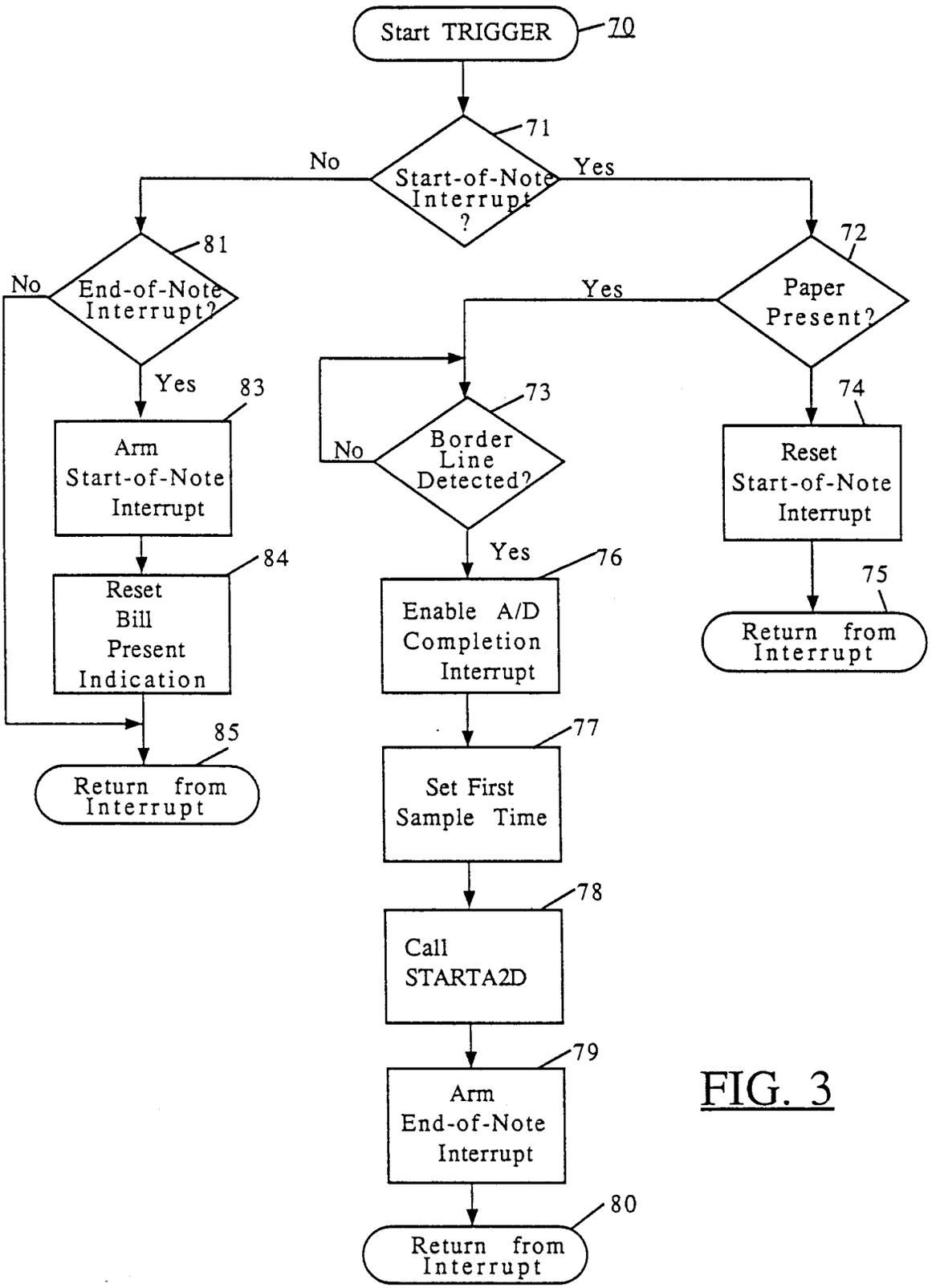
Start TRIGGER
70
71
Start-of-Note Interrupt ?
No
Yes
81
End-of-Note Interrupt?
No
Yes
83
Arm Start-of-Note Interrupt
84
Reset Bill Present Indication
85
Return from Interrupt
72
Paper Present?
Yes
74
Reset Start-of-Note Interrupt
75
Return from Interrupt
73
Border Line Detected?
No
Yes
76
Enable A/D Completion Interrupt
77
Set First Sample Time
78
Call STARTA2D
79
Arm End-of-Note Interrupt
80
Return from Interrupt

FIG. 3

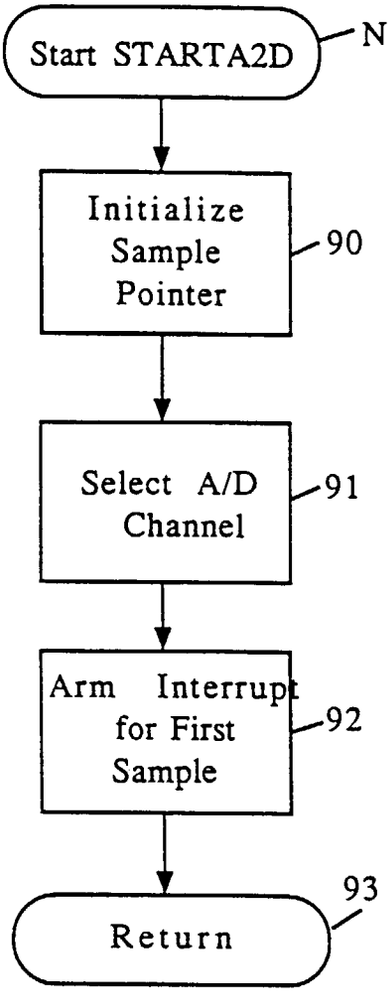
Start STARTA2D
N
Initialize Sample Pointer
90
Select A/D Channel
91
Arm Interrupt for First Sample
92
Return
93

FIG. 4A

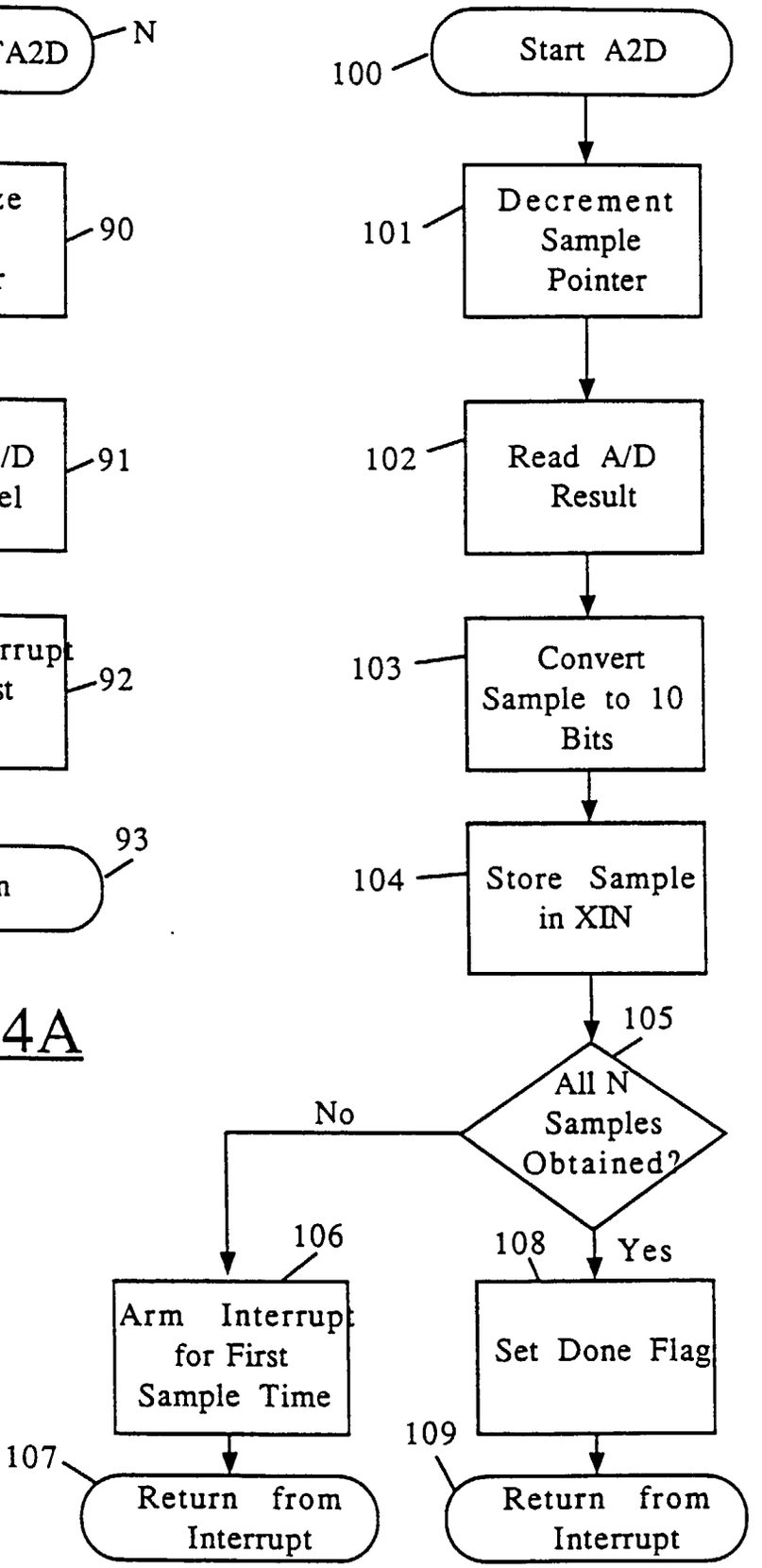
100
Start A2D
101
Decrement Sample Pointer
102
Read A/D Result
103
Convert Sample to 10 Bits
104
Store Sample in XIN
105
All N Samples Obtained?
No
Yes
106
Arm Interrupt for First Sample Time
107
Return from Interrupt
108
Set Done Flag
109
Return from Interrupt

FIG. 4B

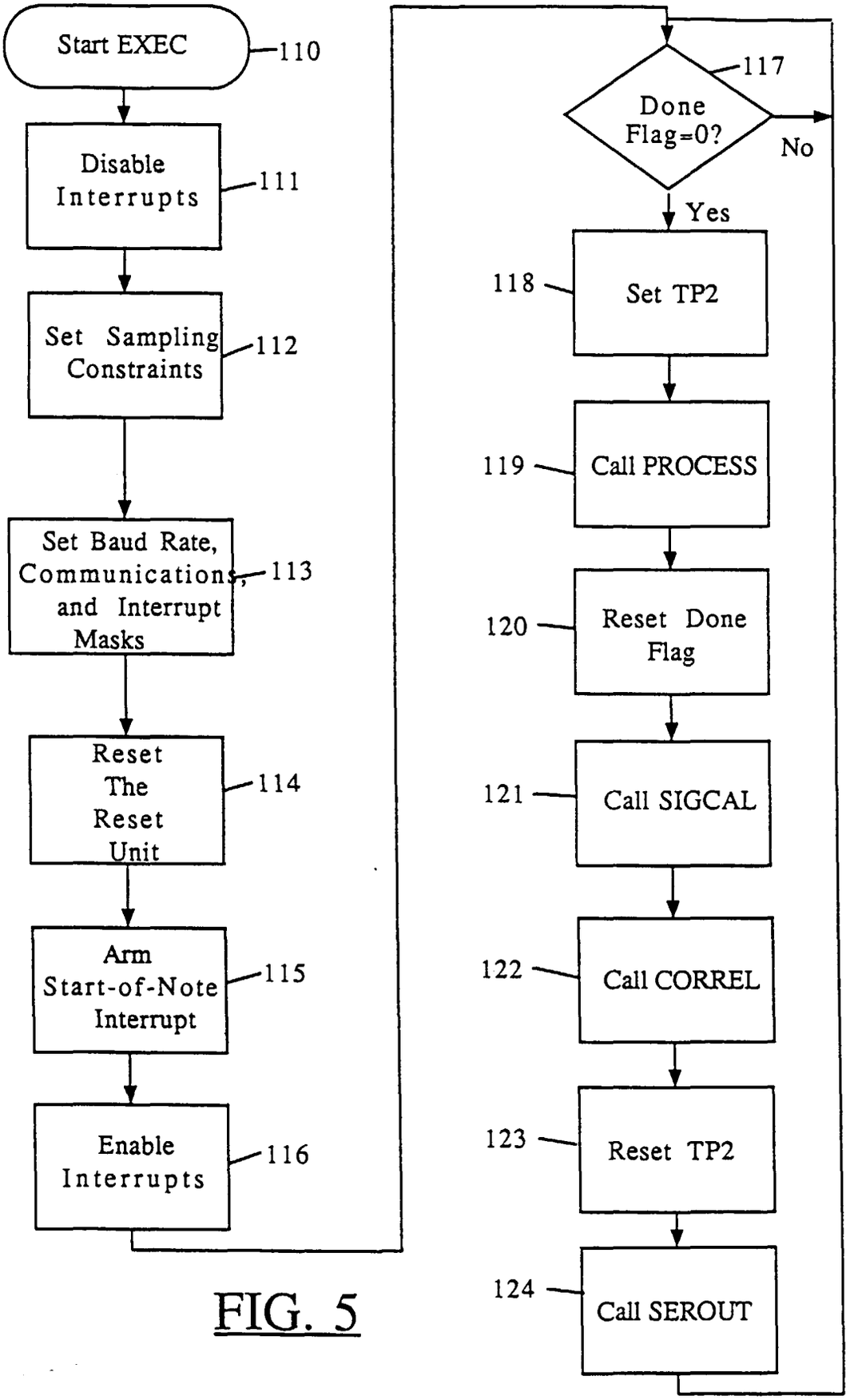
Start EXEC
110
Disable Interrupts
111
Set Sampling Constraints
112
Set Baud Rate, Communications, and Interrupt Masks
113
Reset The Reset Unit
114
Arm Start-of-Note Interrupt
115
Enable Interrupts
116
Done Flag=0?
117
No
Yes
118
Set TP2
119
Call PROCESS
120
Reset Done Flag
121
Call SIGCAL
122
Call CORREL
123
Reset TP2
124
Call SEROUT

FIG. 5

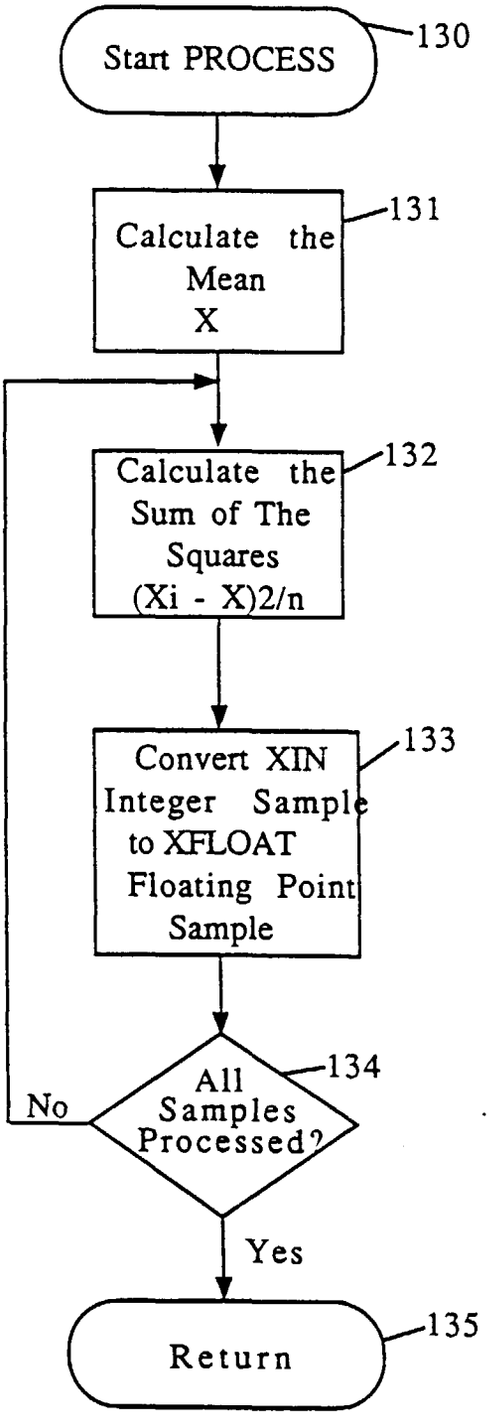
Start PROCESS
130
Calculate the Mean X
131
Calculate the Sum of The Squares (Xi - X)2/n
132
Convert XIN Integer Sample to XFLOAT Floating Point Sample
133
All Samples Processed?
134
No
Yes
Return
135

FIG. 6A

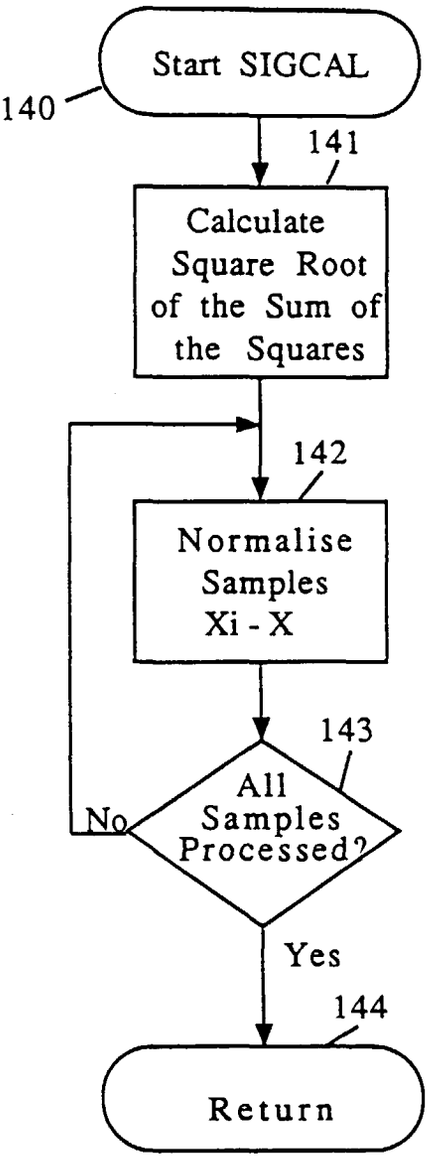
Start SIGCAL
140
Calculate Square Root of the Sum of the Squares
141
Normalise Samples Xi - X
142
All Samples Processed?
143
No
Yes
Return
144

FIG. 6B

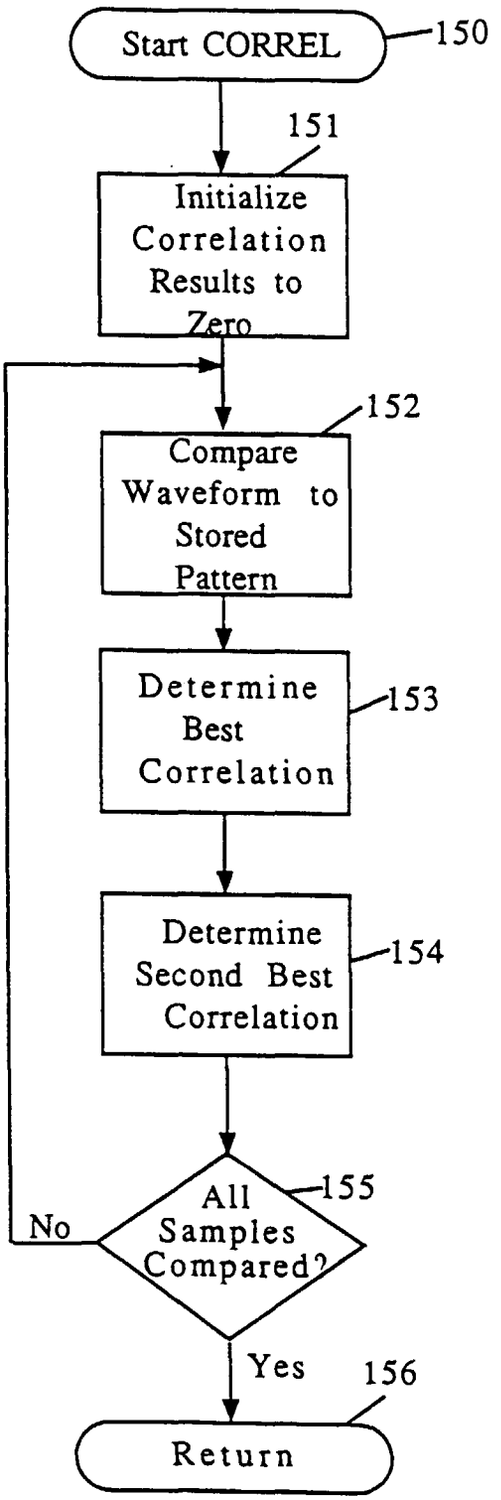
Start CORREL
150
151
Initialize Correlation Results to Zero
152
Compare Waveform to Stored Pattern
153
Determine Best Correlation
154
Determine Second Best Correlation
155
All Samples Compared?
No
Yes
156
Return

FIG. 7

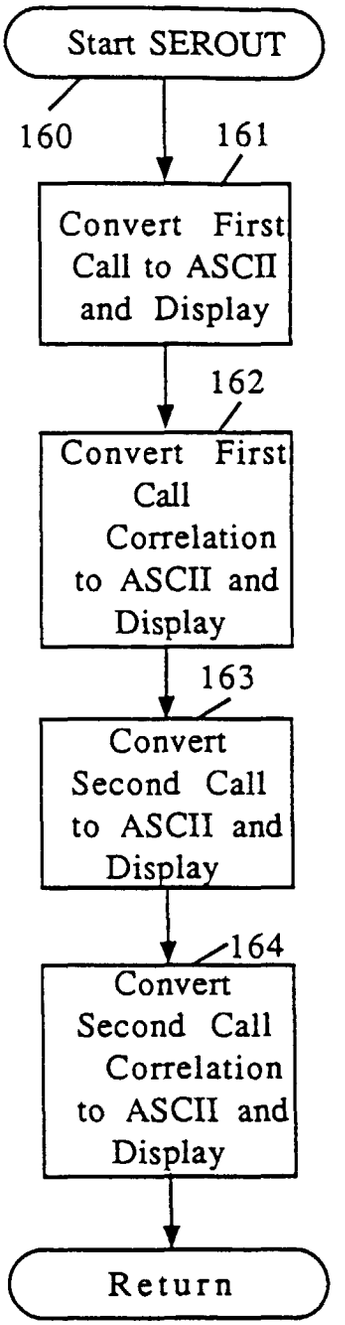
Start SEROUT
160
161
Convert First Call to ASCII and Display
162
Convert First Call Correlation to ASCII and Display
163
Convert Second Call to ASCII and Display
164
Convert Second Call Correlation to ASCII and Display
Return

FIG. 8

FIG. 9A

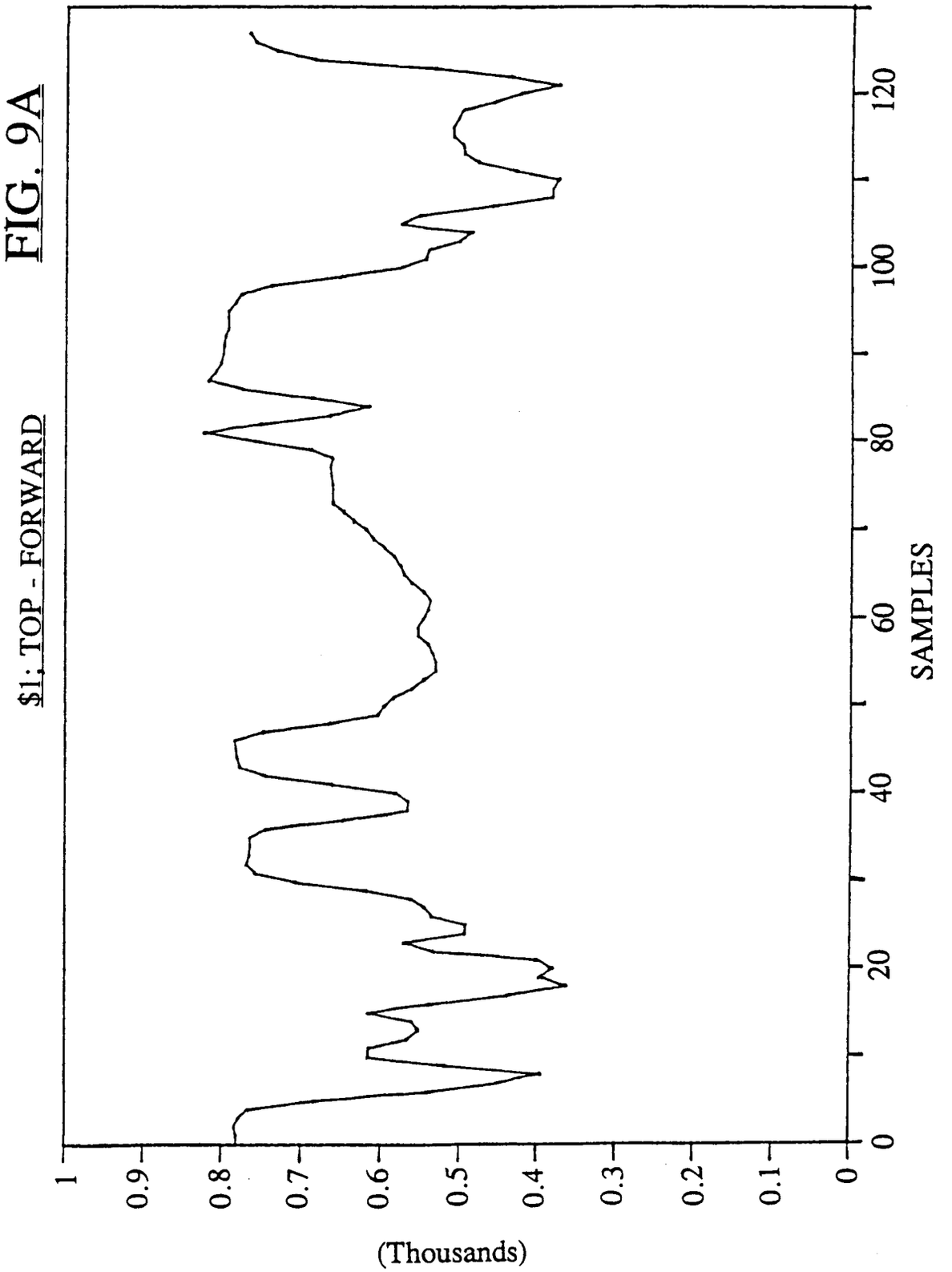
$1: TOP - FORWARD
1
0.9
0.8
0.7
0.6
0.5
0.4
0.3
0.2
0.1
0
(Thousands)
0
20
40
60
80
100
120
SAMPLES

FIG. 9B

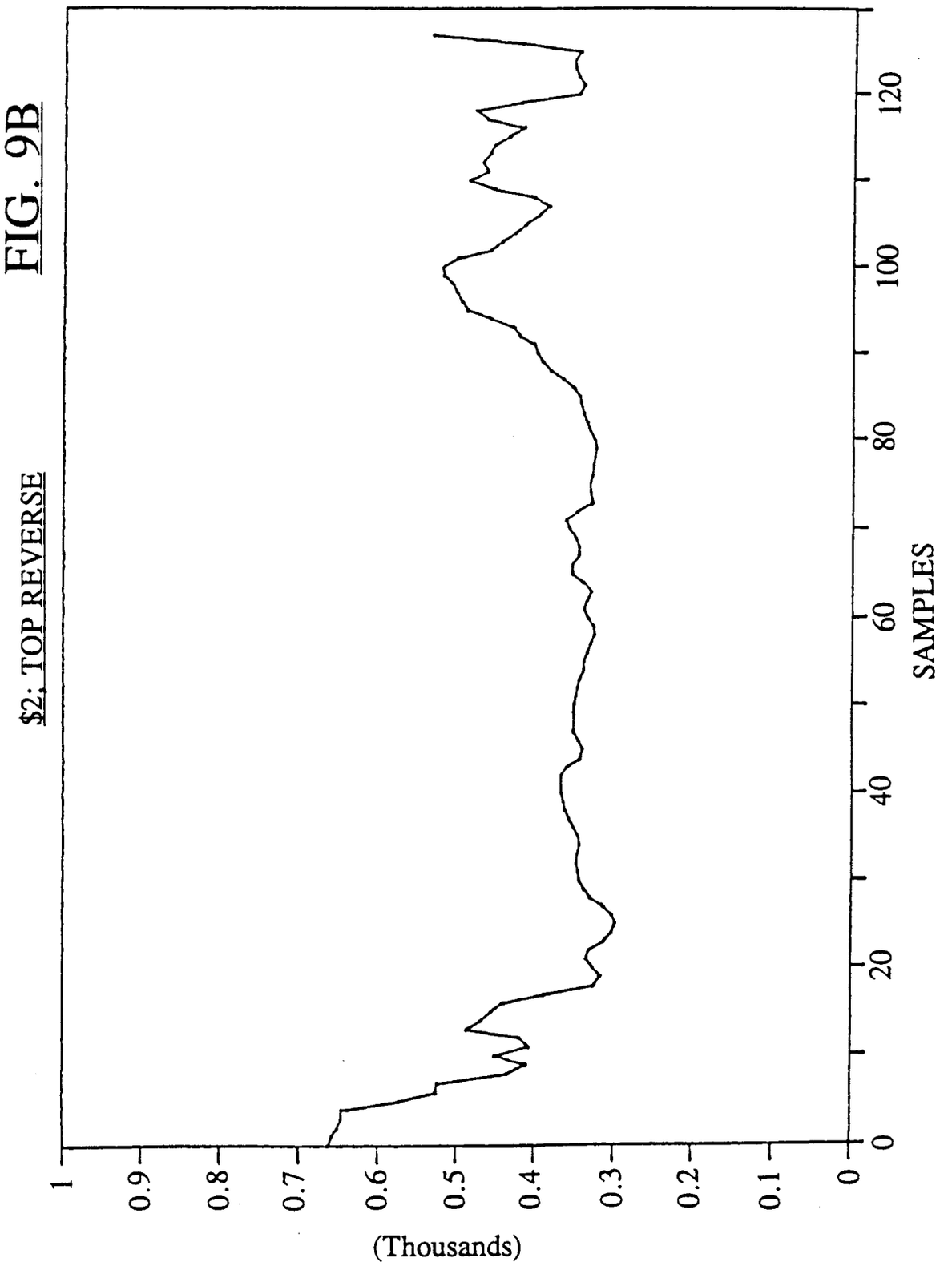
$2; TOP REVERSE
1
0.9
0.8
0.7
0.6
0.5
0.4
0.3
0.2
0.1
0
(Thousands)
0
20
40
60
80
100
120
SAMPLES

FIG. 9C

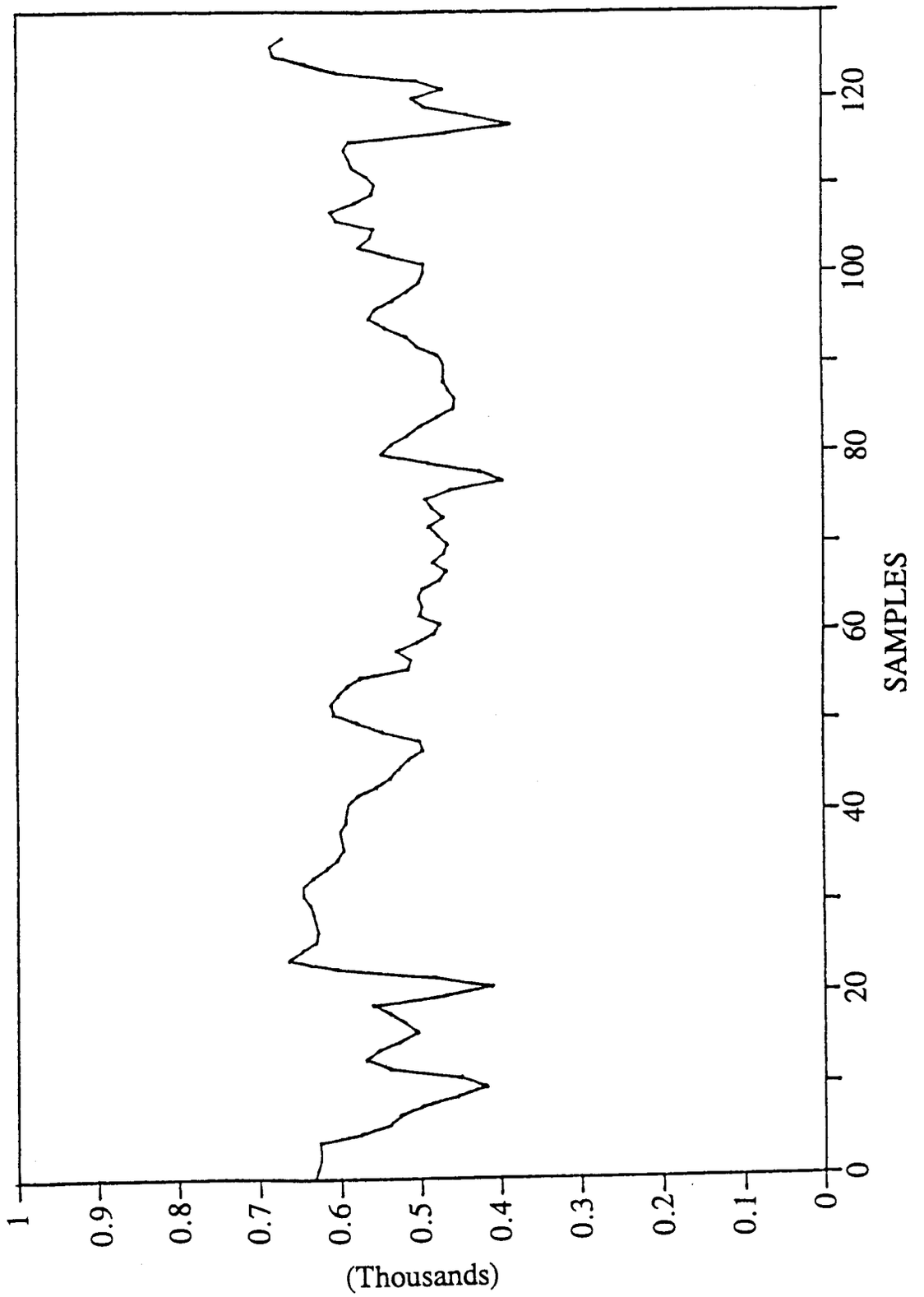
$100; TOP - FORWARD
1
0.9
0.8
0.7
0.6
0.5
0.4
0.3
0.2
0.1
0
(Thousands)
0
20
40
60
80
100
120
SAMPLES

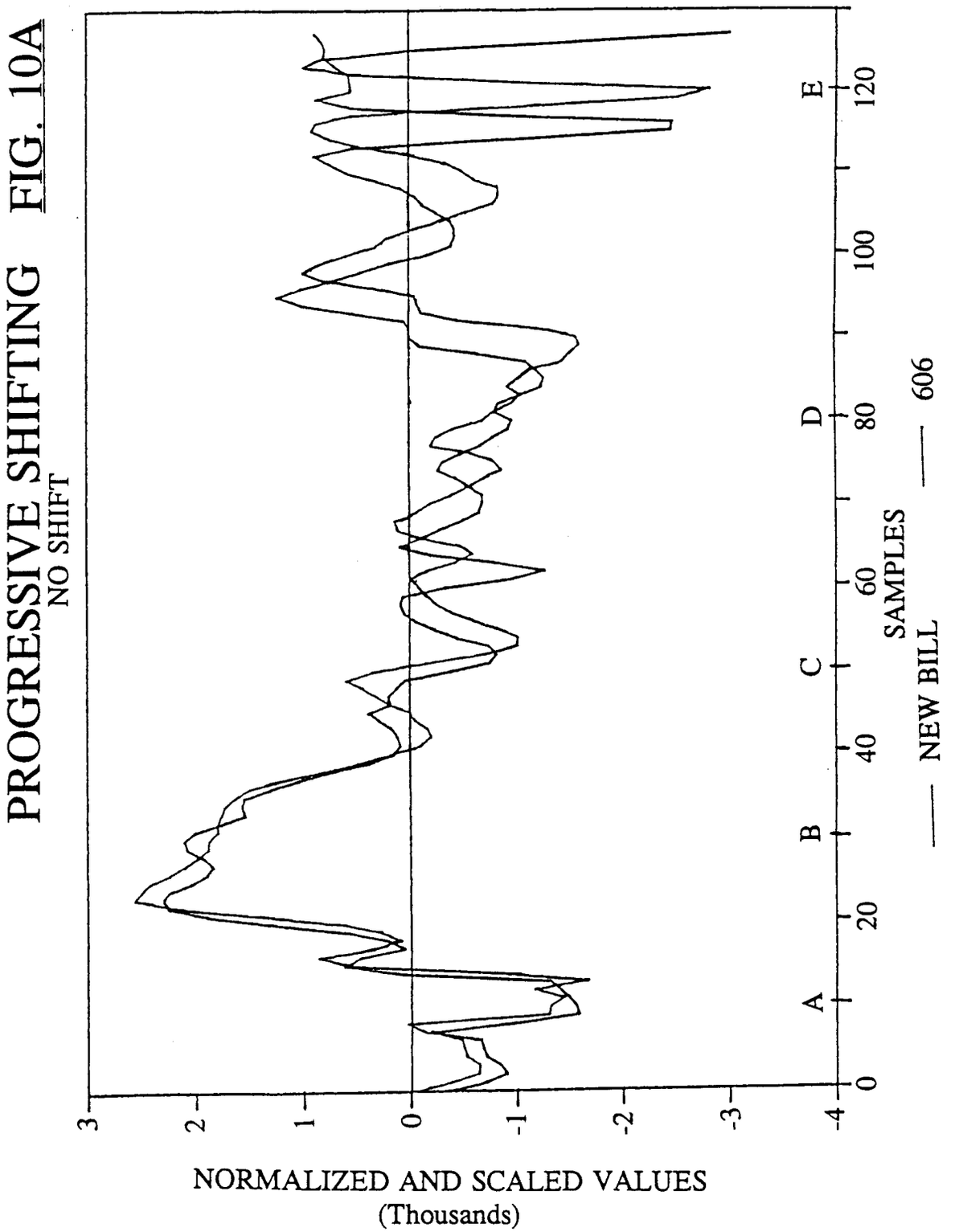
PROGRESSIVE SHIFTING
NO SHIFT
NORMALIZED AND SCALED VALUES
(Thousands)
3
2
1
0
-1
-2
-3
-4
A
B
C
D
E
0
20
40
60
80
100
120
SAMPLES
NEW BILL
606

FIG. 10A

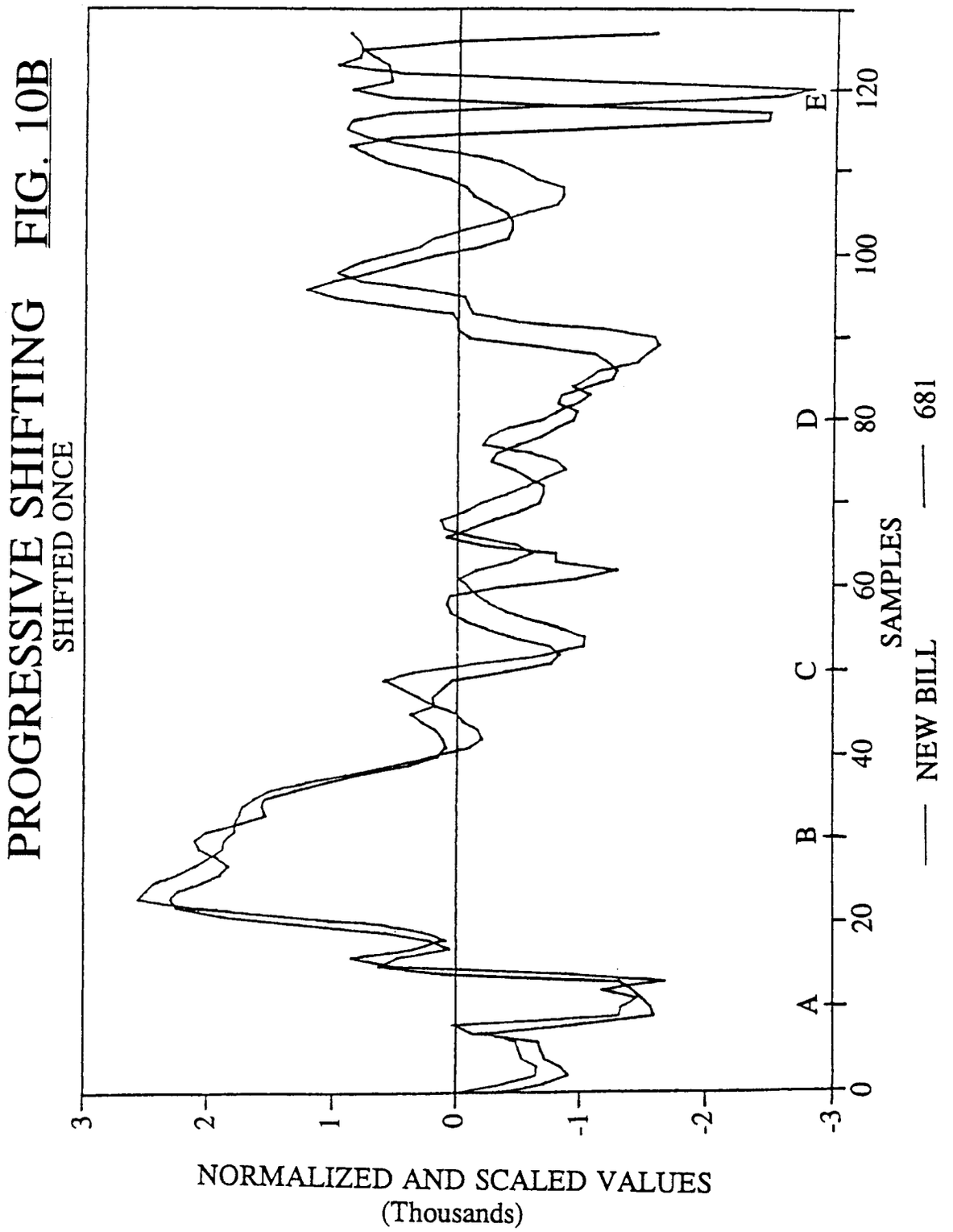
PROGRESSIVE SHIFTING FIG. 10B
SHIFTED ONCE
NORMALIZED AND SCALED VALUES
(Thousands)
3
2
1
0
-1
-2
-3
0
20
40
60
80
100
120
A
B
C
D
E
SAMPLES
NEW BILL
681

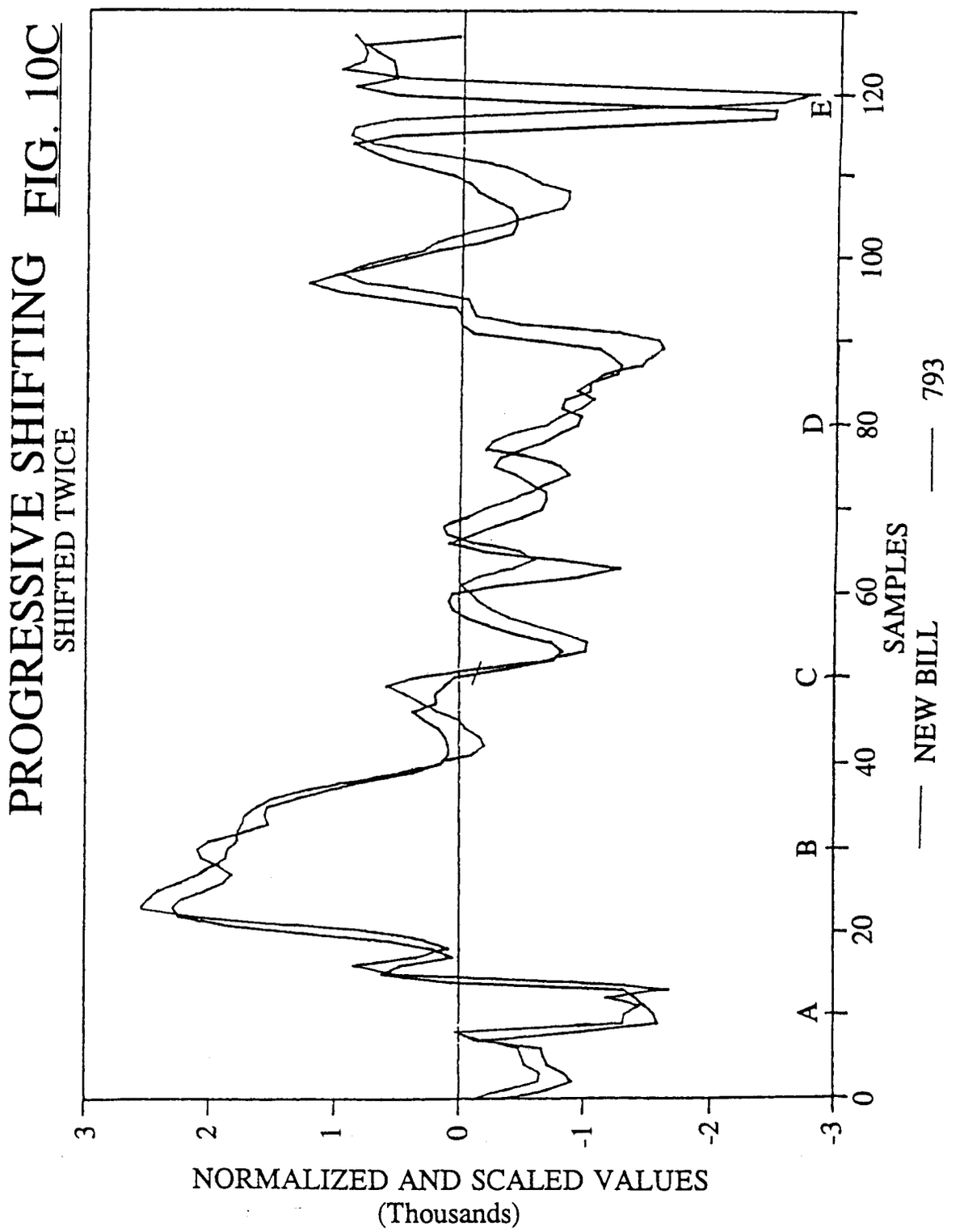
PROGRESSIVE SHIFTING FIG. 10C
SHIFTED TWICE
NORMALIZED AND SCALED VALUES
(Thousands)
3
2
1
0
-1
-2
-3
A
B
C
D
E
0
20
40
60
80
100
120
SAMPLES
NEW BILL
793

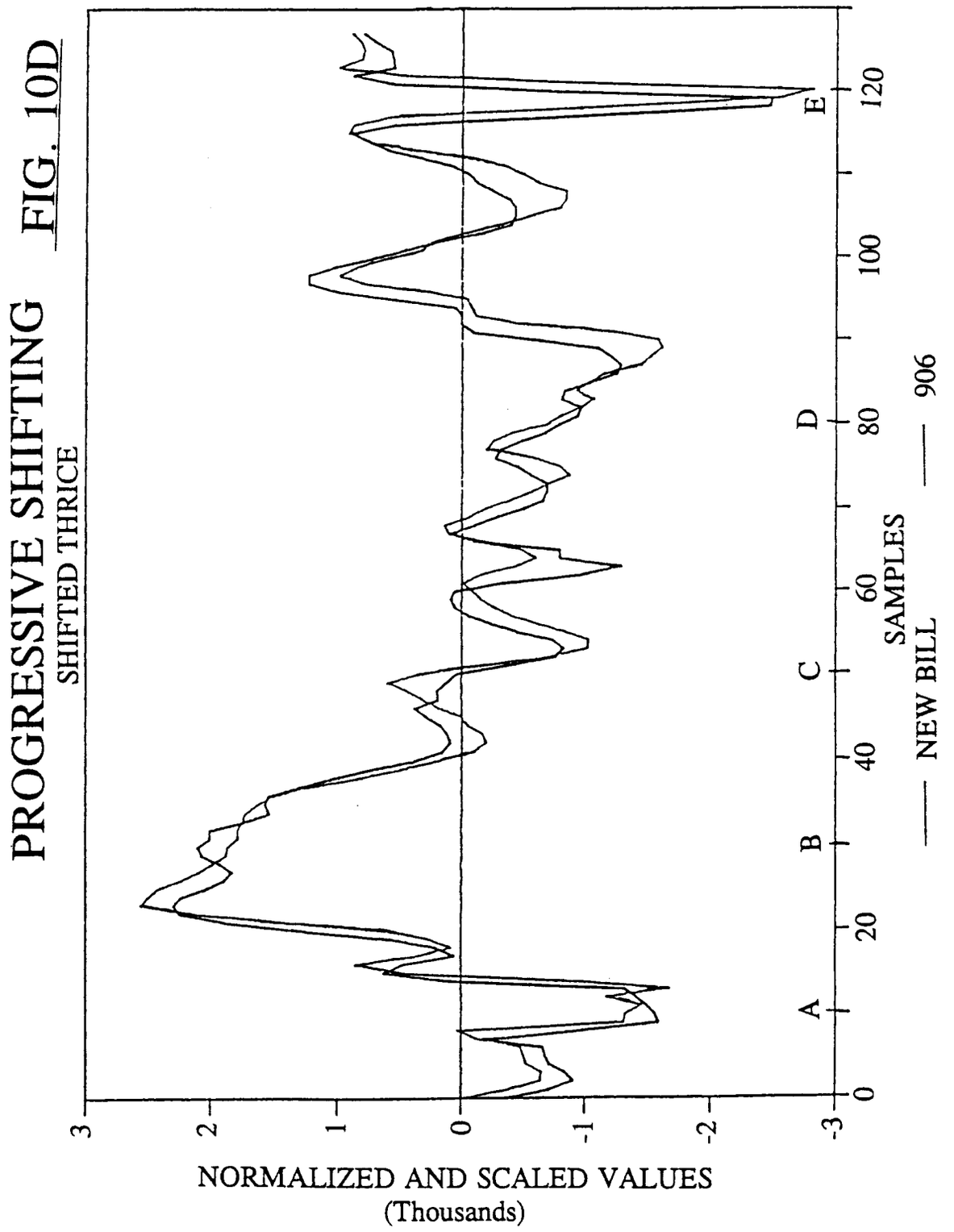
PROGRESSIVE SHIFTING
SHIFTED THRICE
NORMALIZED AND SCALED VALUES
(Thousands)
3
2
1
0
-1
-2
-3
A
B
C
D
E
0
20
40
60
80
100
120
SAMPLES
NEW BILL
906

FIG. 10D

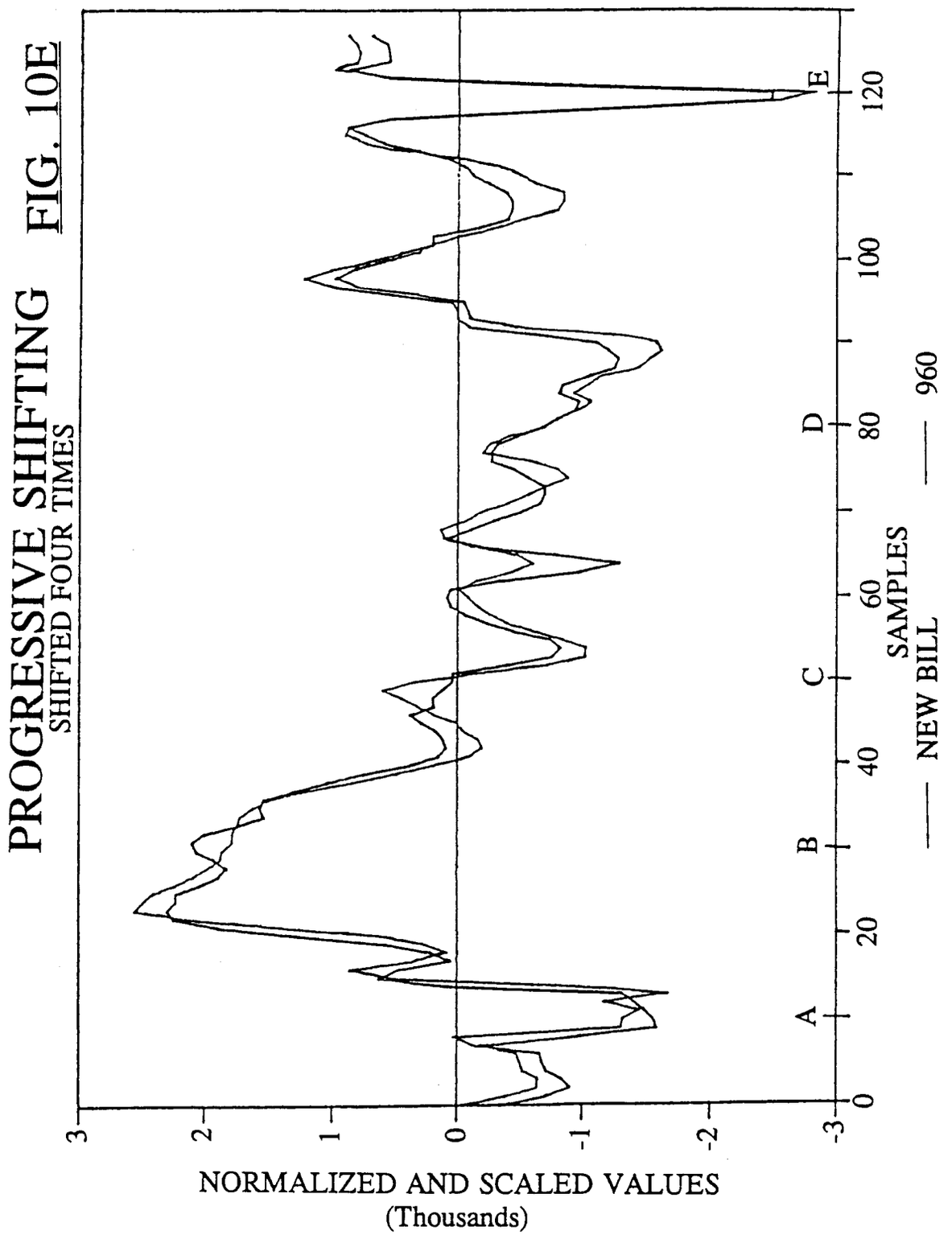
PROGRESSIVE SHIFTING
SHIFTED FOUR TIMES
FIG. 10E
NORMALIZED AND SCALED VALUES
(Thousands)
3
2
1
0
-1
-2
-3
0
20
40
60
80
100
120
A
B
C
D
E
SAMPLES
NEW BILL
960

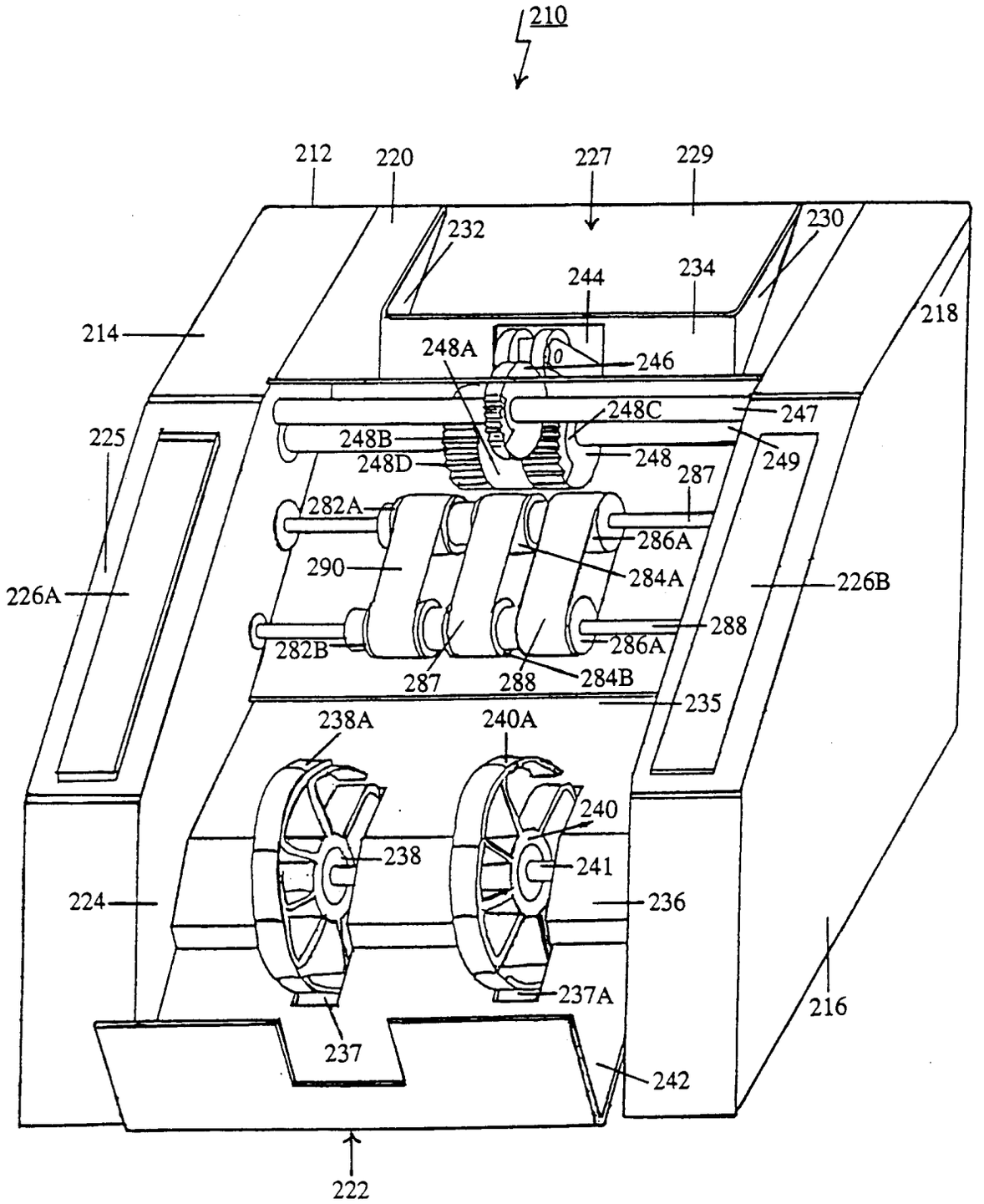
210
212
220
227
229
232
230
244
234
218
214
248A
246
248C
247
225
248B
248D
248
249
287
282A
286A
290
284A
226B
226A
288
282B
286A
287
288
284B
235
238A
240A
240
238
241
224
236
237A
216
237
242
222

FIG. 11

FIG. 12

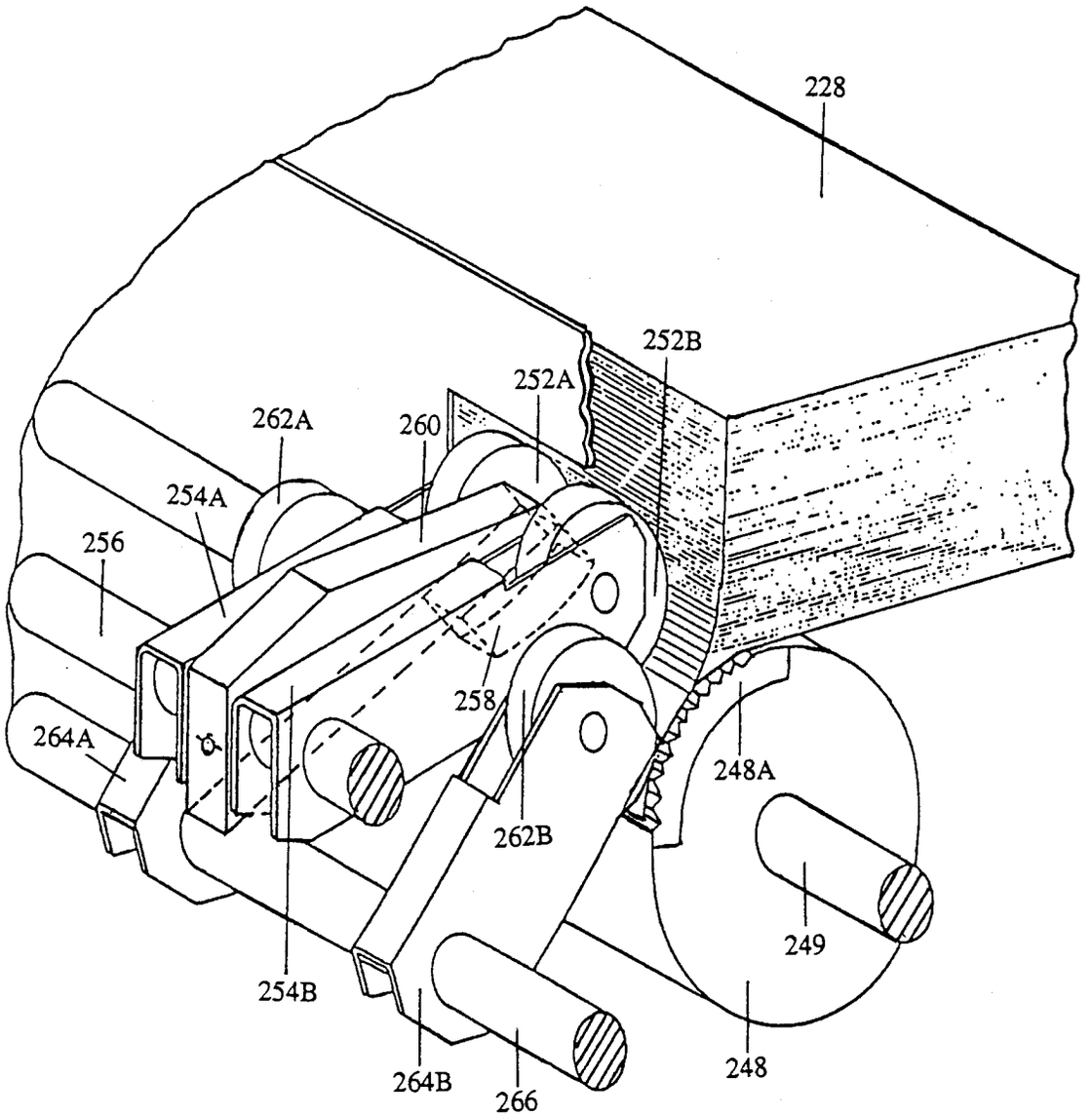
228
252B
252A
262A
260
254A
256
258
264A
248A
262B
249
254B
264B
266
248

FIG. 13

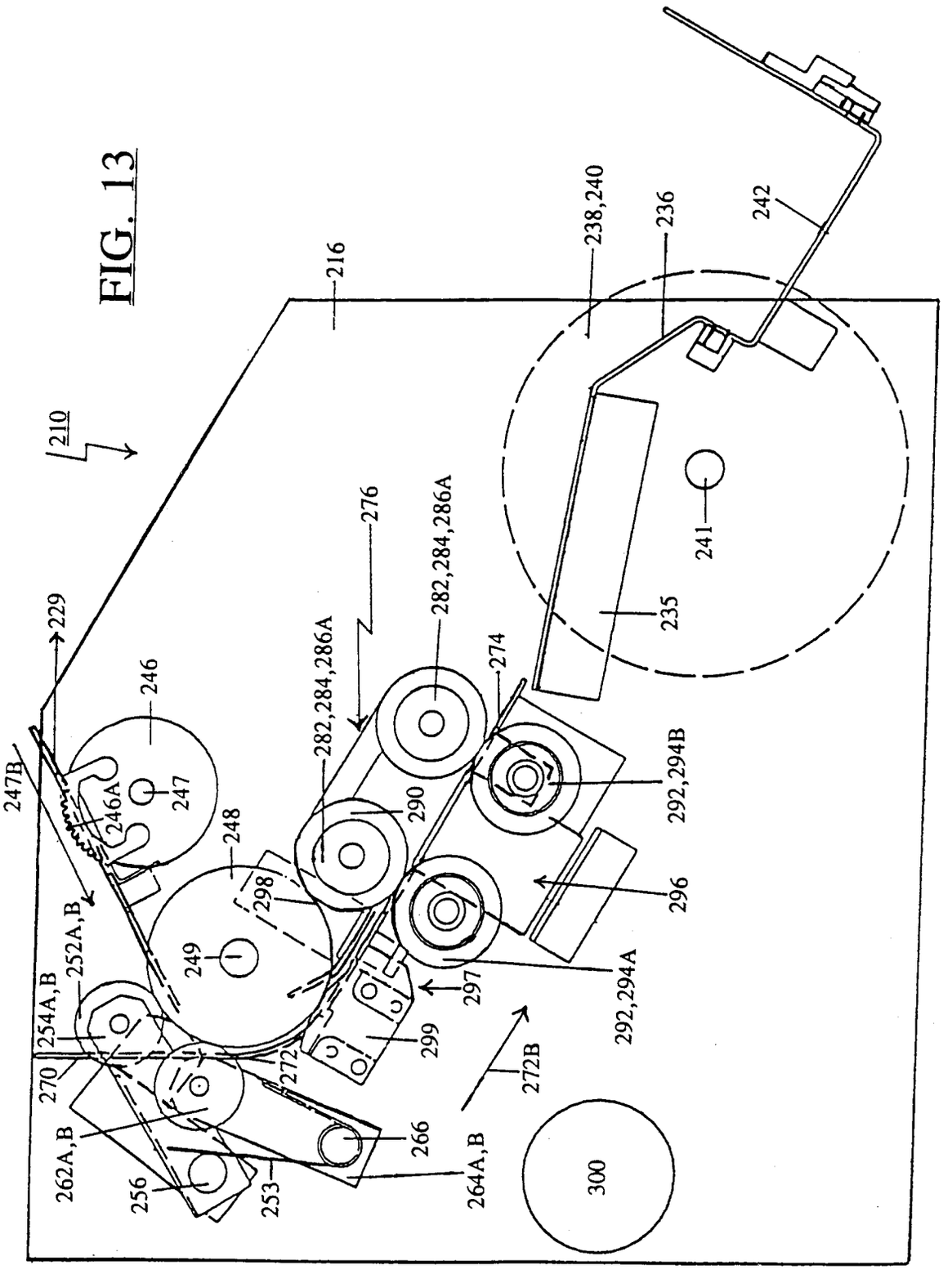
210
216
238,240
236
242
241
235
229
246
247B
246A
247
248
282,284,286A
276
282,284,286A
274
290
292,294B
298
296
249
252A,B
254A,B
297
292,294A
270
272
299
272B
262A,B
266
264A,B
256
253
300

FIG. 14

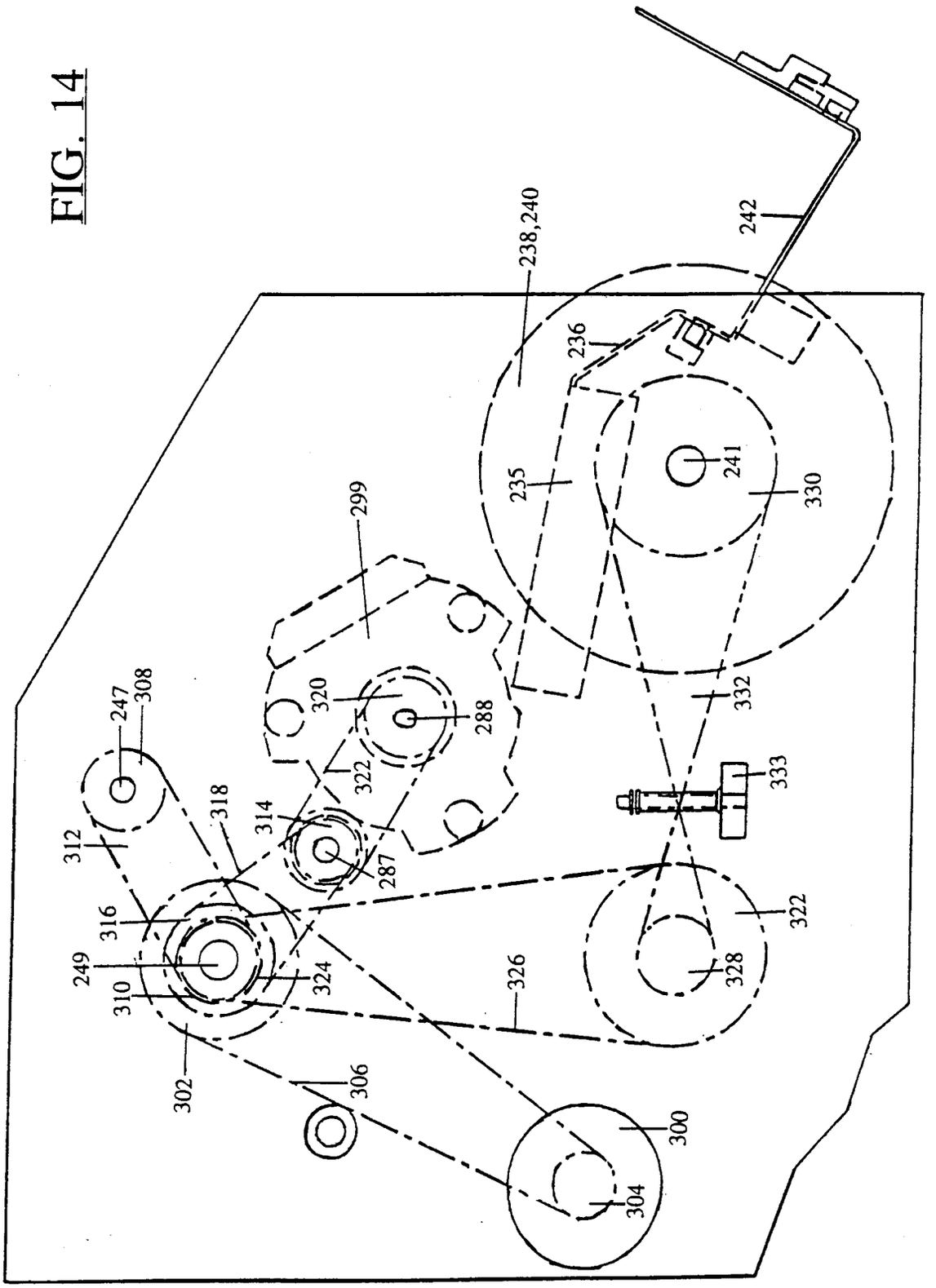
238,240
242
236
235
241
330
299
320
288
322
247
308
318
314
312
287
316
249
310
324
326
328
322
332
333
302
306
300
304

FIG. 15

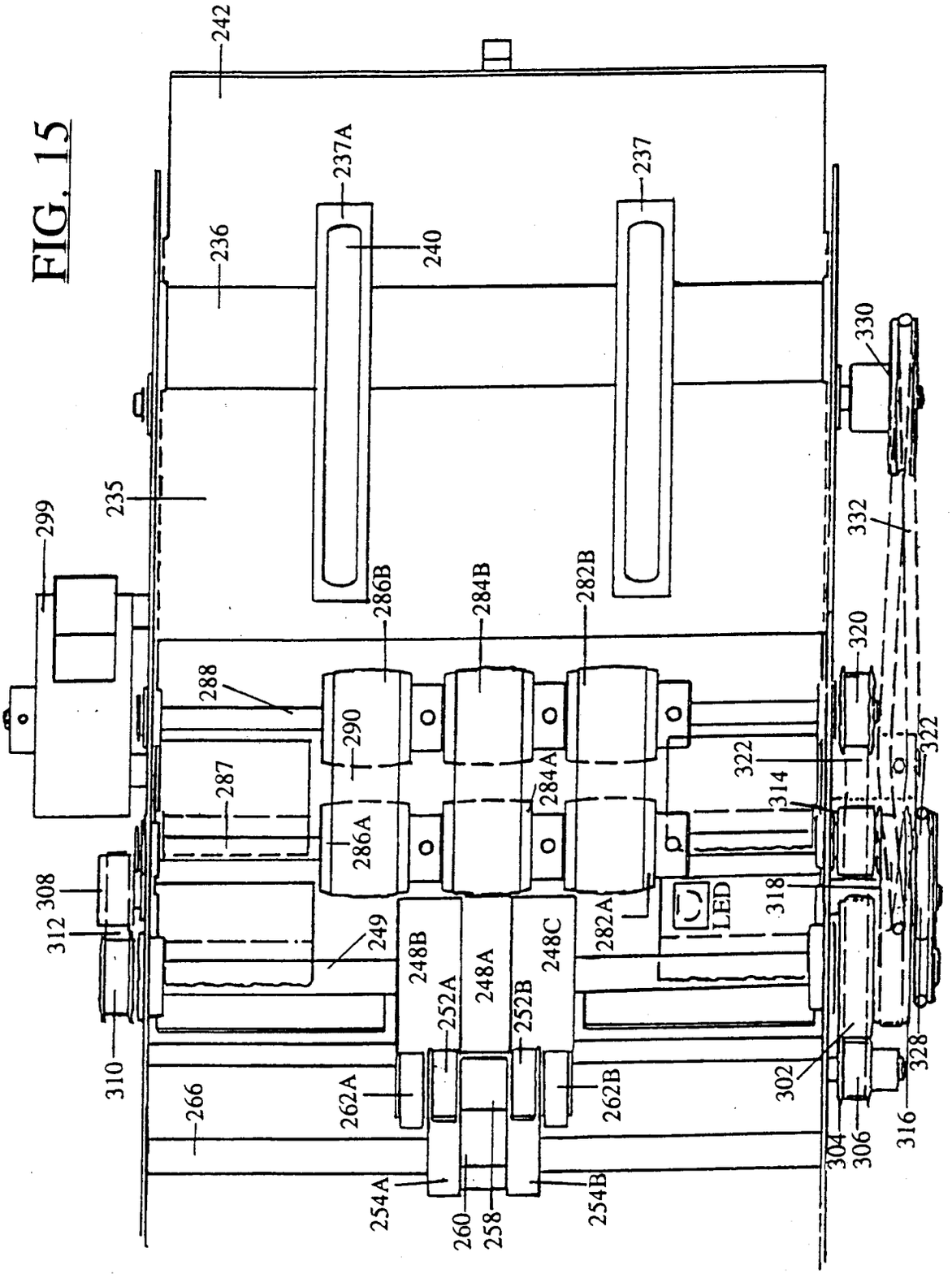
242
237A
237
236
240
330
235
299
332
286B
284B
282B
320
288
290
322
322
287
284A
314
286A
308
318
LED
312
249
248B
248A
248C
282A
252A
252B
310
262A
262B
302
328
266
304
306
316
254A
254B
260
258

FIG. 16

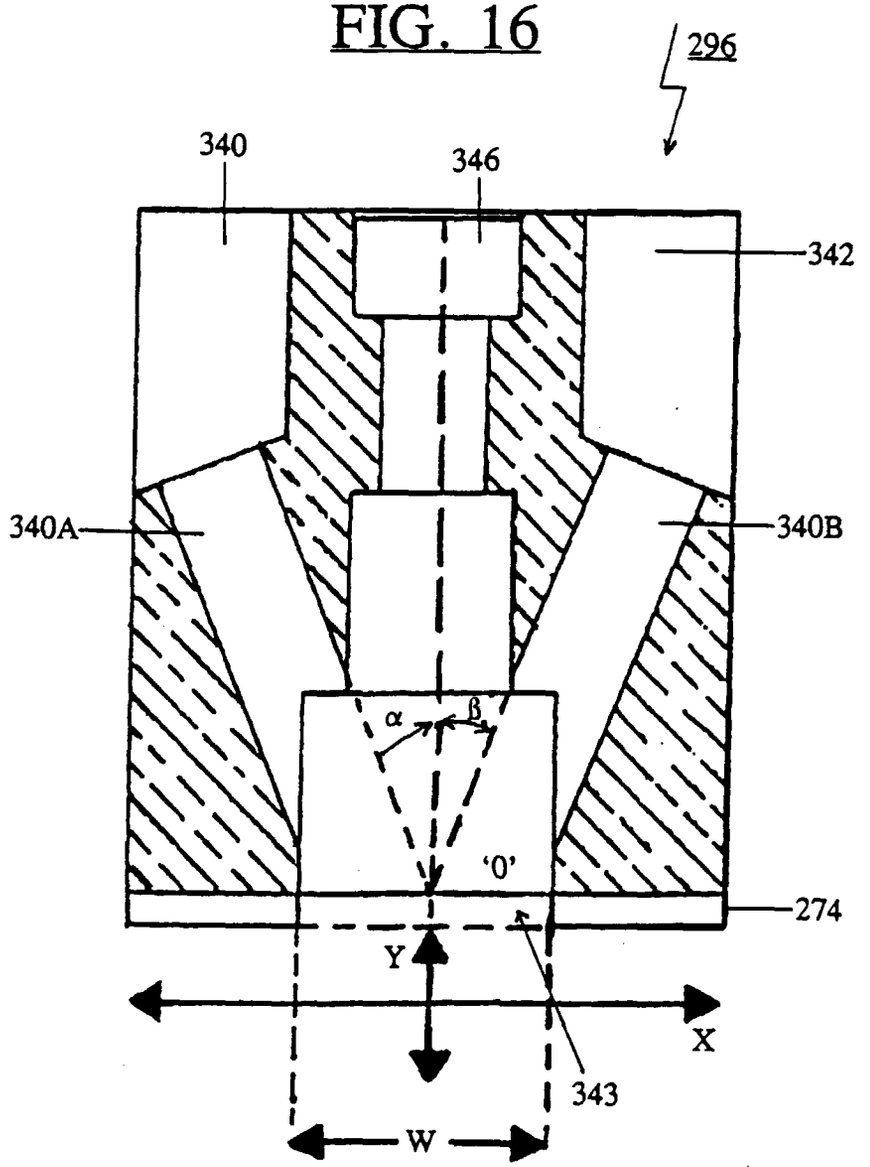

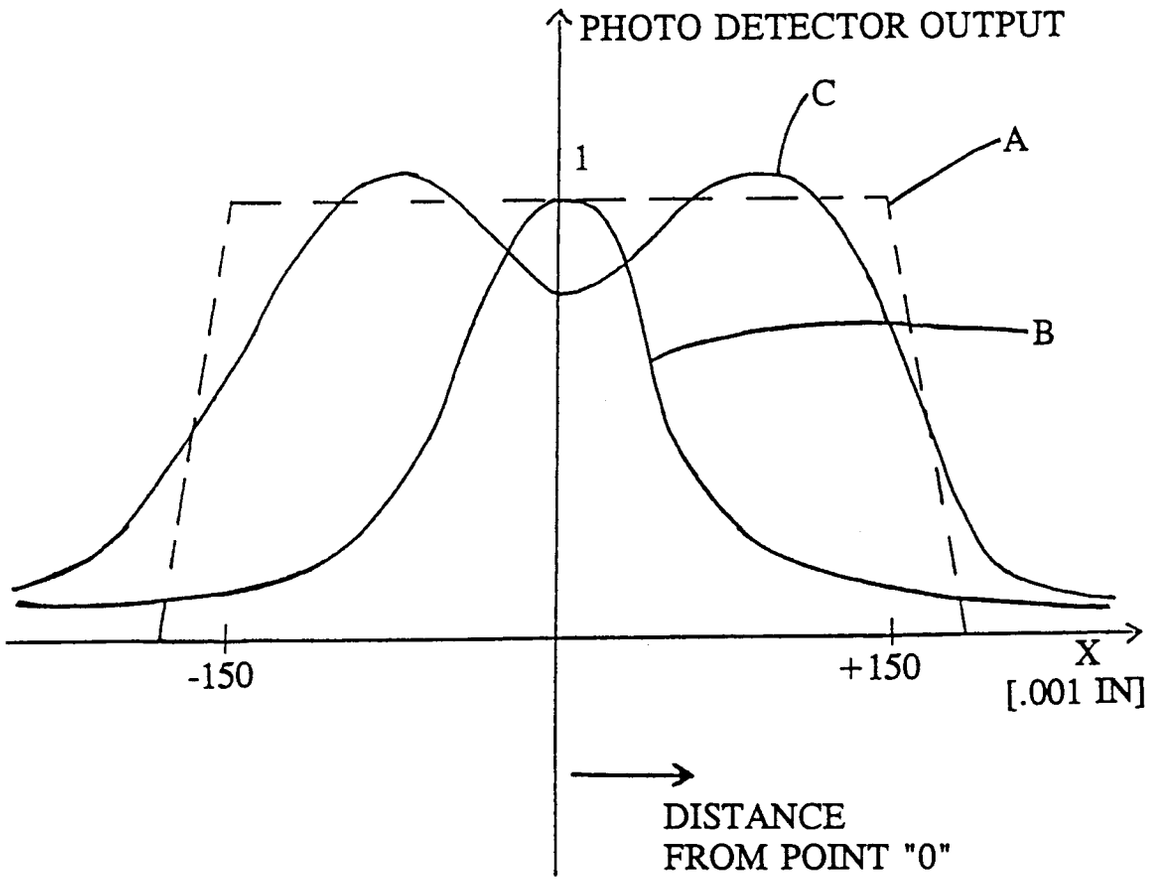
PHOTO DETECTOR OUTPUT
C
A
1
B
-150
+150
X
[.001 IN]
DISTANCE
FROM POINT "0"

FIG. 17

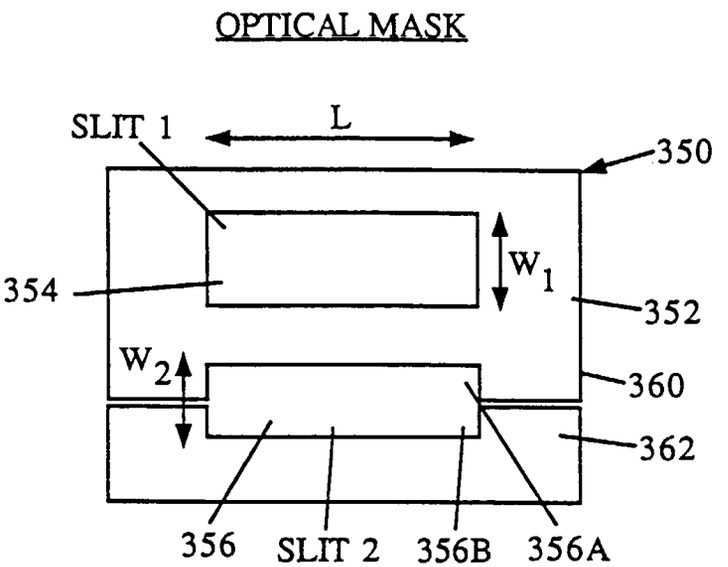
OPTICAL MASK
SLIT 1
L
350
354
W1
352
W2
360
362
356
SLIT 2
356B
356A

FIG.18