(19) Europäisches Patentamt
European Patent Office
Office européen des brevets

(11) EP 0 899 037 A2

(12) **EUROPEAN PATENT APPLICATION**

(43) Date of publication:
03.03.1999 Bulletin 1999/09

(51) Int. Cl.[6]: **B21K 15/02**

(21) Application number: **98202547.0**

(22) Date of filing: **29.07.1998**

(84) Designated Contracting States:
AT BE CH CY DE DK ES FI FR GB GR IE IT LI LU MC NL PT SE
Designated Extension States:
AL LT LV MK RO SI

(30) Priority: **28.08.1997 NL 1006873**

(71) Applicant: **Kerckhaert B.V.**
4581 AE Vogelwaarde (NL)

(72) Inventor:
Kerckhaert Rudolf Karel Marie
9112 Sinaai (BE)

(74) Representative: **Donné, Eddy**
Bureau M.F.J. Bockstael nv
Arenbergstraat 13
2000 Antwerpen (BE)

(54) **Method for manufacturing a horseshoe device applying this method, and horseshoe obtaned by means of this method**

(57) Method for manufacturing a horseshoe, characterized in that one starts with a straight or bent rod-shaped element (1) in which, in one side and per clip (14-15-16) to be formed, two crosswise-directed indentations (4-5) are provided, after which at least a portion of the quantity of material (9) located between these indentations (4-5) is pushed away in order to form a clip (14-15-16).

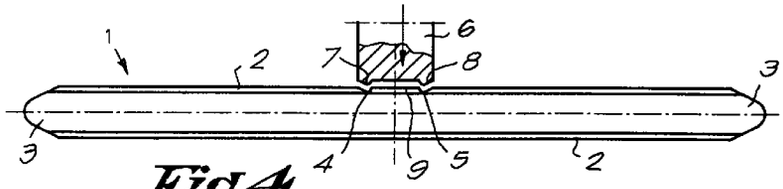

Fig.4

EP 0 899 037 A2

Description

[0001] This invention relates to a method for manufacturing a horseshoe, more particularly a horseshoe which, as known, is provided with one or two clips, namely, a so-called toe clip or two so-called lateral clips.

[0002] The invention also relates to a device applying this method.

[0003] It is known that in manufacturing horseshoes, one starts with a rod-shaped element which is provided with one or two clips, by pushing away material from this rod-shaped element at a suitable place or places, in order to form the aforementioned toe clip or lateral clips.

[0004] To this end, as known, use is made of a pressing element which provides in a displacement in relation to the rod-shaped element or reverse, in such a manner that a quantity of material from the rod-shaped element is pushed away in order to form a suitable clip, directed vertically or almost vertically to the rod-shaped element.

[0005] A disadvantage of this known method is that the material of which the aforementioned clip consists, partially protrudes outwardly along the lateral edges of the barrel-shaped roll, as a result of which undesired thick edges are formed.

[0006] Another disadvantage of this known method is that, in order to compensate for the material which protrudes at the lateral edges of the aforementioned roll, this latter has to be pressed relatively deep into the rod-shaped element, which results in an undesired indentation in the exterior edge of the horseshoe, at the location of a clip.

[0007] Still another disadvantage which is the result of this known method is that, due to the presence of the aforementioned thick edges at the clip or clips, the hoof has to be adapted to the horseshoe, as a result of which, apart from the manual work which is created thereby, also a weakening of the hoof is obtained.

[0008] In order to avoid the aforementioned disadvantages, it has already, as described in the Dutch Patent Application No. 1002886, been suggested to provide a rod-shaped element with cutouts over the major part of its length, in order to keep, per clip to be formed, a cam-shaped part which subsequently is deformed in order to obtain a clip.

[0009] Although by means of this latter method clips are obtained which are almost flat and which show a rather small thickness over the whole surface, without the aforementioned thick edges, this method has as a disadvantage that a rather large loss of material occurs therewith as, in order to realize a horseshoe with the same width, one must start with a rod-shaped element with larger width.

[0010] In order to avoid the aforementioned and other disadvantages of the known methods, the present invention relates to a method whereby one starts with a straight or bent rod-shaped element in which, in one side and per clip to be formed, two crosswise-directed indentations are provided, after which at least a portion of the quantity of material located between these indentations is pushed away in order to form a clip.

[0011] With the intention of better showing the characteristics according to the invention, hereafter, as an example without any limitative character, a preferred form of embodiment is described, with reference to the accompanying drawings, wherein:

figure 1 represents a front view of a rod-shaped element;
figure 2 represents the rod-shaped element according to figure 1, provided with rounded extremities and chamfered longitudinal edges;
figure 3 represents a cross-section according to line III-III in figure 2;
figures 4 to 7 represent the method according to the invention in a schematical manner;
figure 8, in perspective, represents a horseshoe which is obtained according to the invention;
figure 9 represents a cross-section according to line IX-IX in figure 8;
figure 10 represents a view according to arrow F10 in figure 8;
figures 11 and 12 represent variants of the punching tool according to figure 4;
figure 13 represents a view similar to the one of figure 4, but for the realization of a horseshoe with two lateral clips;
figure 14, in perspective, represents a horseshoe with two lateral clips.

[0012] According to the invention, one starts with a rod-shaped element 1 which in this embodiment is provided with chamfered longitudinal edges 2 and the extremities of which show a rounding 3. Of course one may also start with a rod-shaped element showing neither chamfered longitudinal edges 2 nor roundings 3.

[0013] The method according to the invention substantially consists in that in one side of the rod-shaped element 1 indentations, 4 and 5 respectively, are provided in a suitable manner, which indentations, either or not, are placed symmetrically in respect to the middle of the length of the rod-shaped element 1 and at an intermediate distance which is approximately equal to the largest width of the clip to be realized.

[0014] The aforementioned indentations 4 and 5 can be applied in which manner whatsoever, such as by means of a roll with protrusions, a punching tool 6 with protrusions, 7 and 8 respectively, or similar.

[0015] Although the indentations 4 and 5 may have any shape, in the represented preferred form of embodiment these indentations shall have a triangular shape and, even more particularly, an unequal triangular shape, whereby the largest side is formed by the open base of the triangle and the smallest sides of the triangular indentations are directed towards each other.

[0016] The indentations 4 and 5 may either be cold formed or after the rod-shaped element has been

heated locally or completely.

[0017] In this manner, a quantity of material 9 is formed between the indentations 4 and 5.

[0018] The method according to the invention is completed further by means 10, for example a clamp, between which the rod-shaped element 1, which is provided with indentations 4 and 5, can be clamped, on one hand, and a pressing element 11, in this case in the form of a cylindrical disc, the width of which is equal to, or somewhat larger than, the width of the aforementioned quantity of material 9.

[0019] In this case, the means 10 are formed by an upper part 12 and a lower part 13, whereby the lower part 13 recedes over a distance A in respect to the upper part 12, which distance A is approximately equal to the maximum thickness which one wants to give to the clip of the horseshoe to be formed.

[0020] By performing a relative movement between the rod-shaped element 1 and the pressing element 11, more particularly moving the pressing element 11 along the rod-shaped element 1, the quantity of material 9 shall be pushed away in order to form, as represented in figure 7, a clip 14 which is directed at right angles to the rod-shaped element 1 and the thickness of which, at the basis of the clip, is approximately equal to the aforementioned distance A.

[0021] It is obvious that, due to the presence of the indentations 4 and 5, the pressing element 11 can effect upon the entire width of the quantity of material 9 in such a manner that a clip is formed which is rather thin and whereby all material 9 is incorporated in this clip 14 without the formation of edges or similar upon the clip 14.

[0022] Subsequently, the horseshoe will be formed by bending the rod-shaped element 1 into the suitable shape, whereby the inclined walls of the indentations 4 and 5 provide for obtaining a continuity in the transition between the exterior edge of the horseshoe and the clip 14 provided thereupon.

[0023] It is, of course, also possible to first bend the rod-shaped element 1 in the form of a horseshoe and only subsequently form the clip 14, whereby the indentations 4 and 5 can be applied before or after bending.

[0024] In this manner, a horseshoe is obtained with a rather nice transition between the exterior edge therof and the clip 14 placed thereupon, whereby this latter is rather thin and has no protruding parts or edges, such that, when the horseshoe is applied, no undesired operations at the hoof have to be made.

[0025] In figures 11 and 12, two other variants of punching tools 6 are represented, whereby the protrusions 7-8 show another form than those in figure 2.

[0026] These protrusions 7-8 may indeed show any form, and the represented forms are not limitative.

[0027] In figure 11, a rod-shaped element 1 is represented wherein, according to the invention, two pairs of indentations 4 and 5 are provided in order to be able to realize a horseshoe with two lateral clips, 15 and 16, respectively.

[0028] Although, in the aforegoing, always indentations 4 and 5 are discussed which are obtained by means of a punching tool 6, it is obvious that such indentations can be obtained in any other manner, for example, by grinding, punching away or the like.

[0029] It is also noted that the pressing element 11 can be provided non-rotatable as well as rotatable.

[0030] Finally, the present invention is in no way limited neither to the method described by way of example and represented in the figures, nor to the device applied thereby, on the contrary may such method and device be applied, realized, respectively, in various variants, forms and dimensions, without leaving the scope of the invention.

Claims

1. Method for manufacturing a horseshoe, characterized in that one starts with a straight or bent rod-shaped element (1) in which, in one side and per clip (14-15-16) to be formed, two crosswise-directed indentations (4-5) are provided, after which at least a portion of the quantity of material (9) located between these indentations (4-5) is pushed away in order to form a clip (14-15-16).

2. Method according to claim 1, characterized in that the indentations (4-5) are formed by impressions obtained by means of a punching tool (6).

3. Method according to claim 1, characterized in that the indentations (4-5) are formed by a roll with protrusions.

4. Method according to claim 1, characterized in that the indentations (4-5) are formed by grinding.

5. Method according to claim 1, characterized in that the indentations (4-5) are obtained by punching away.

6. Method according to any of the preceding claims, characterized in that the indentations (4-5) have a triangular or almost triangular form.

7. Method according to claim 6, characterized in that the indentations (4-5) have an unequal triangular form.

8. Method according to claim 7, characterized in that the largest side of the unequal triangular form of the indentations (4-5) is formed by the open basis of the triangle and that the smallest sides of the triangular indentations are directed towards each other.

9. Method according to claim 6, characterized in that the top of the triangular protrusions is flattened.

10. Method according to claim 6, characterized in that the protrusions (7-8) are formed by a rectangular triangle.

11. Method according to any of the preceding claims, characterized in that the rod-shaped element (1) is heated during the application of the indentations (4-5).

12. Method according to any of the preceding claims, characterized in that the rod-shaped element (1) provided with indentations is held in a clamp or similar (10), after which a relative movement is performed between the rod-shaped element (1) and a pressing element (11) in order to deform at least a portion of the quantity of material (9) as a clip (14-15-16).

13. Method according to claim 12, characterized in that the clamp or similar (10) consists of an upper part (12) and a lower part (13) whereby this latter recedes over a distance A in respect to the upper part (12), whereby this distance A is approximately equal to the thickness of the clip (14-15-16) to be realized.

14. Method according to claim 12, characterized in that the width of the pressing element (11) is equal to, or somewhat larger than, the width of the quantity of material (9).

15. Method according to claim 12, characterized in that the pressing element (11) is formed by a cylindrical disc.

16. Method according to claim 15, characterized in that the pressing element (11) is provided in a fixed manner.

17. Method according to claim 15, characterized in that the pressing element (11) is provided in a rotatable manner.

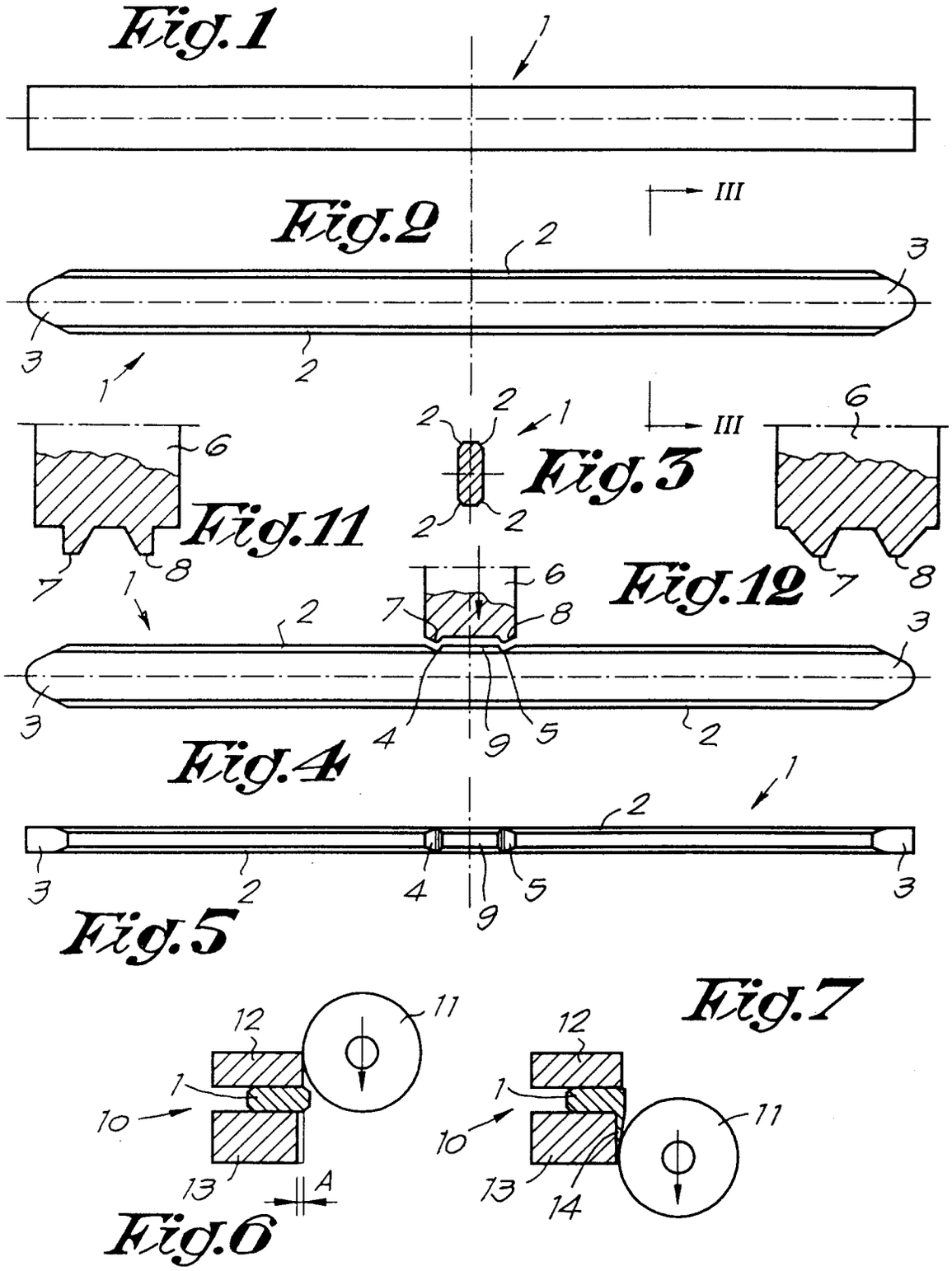
Fig.1
1
Fig.2
III
2
3
3
2
1
Fig.3
2
2
1
2
2
III
Fig.11
6
7
8
1
Fig.12
6
7
8
Fig.4
6
7
8
2
3
3
4
9
5
2
Fig.5
1
2
3
2
4
9
5
3
Fig.7
12
11
1
10
13
14
Fig.6
12
11
1
10
13
A

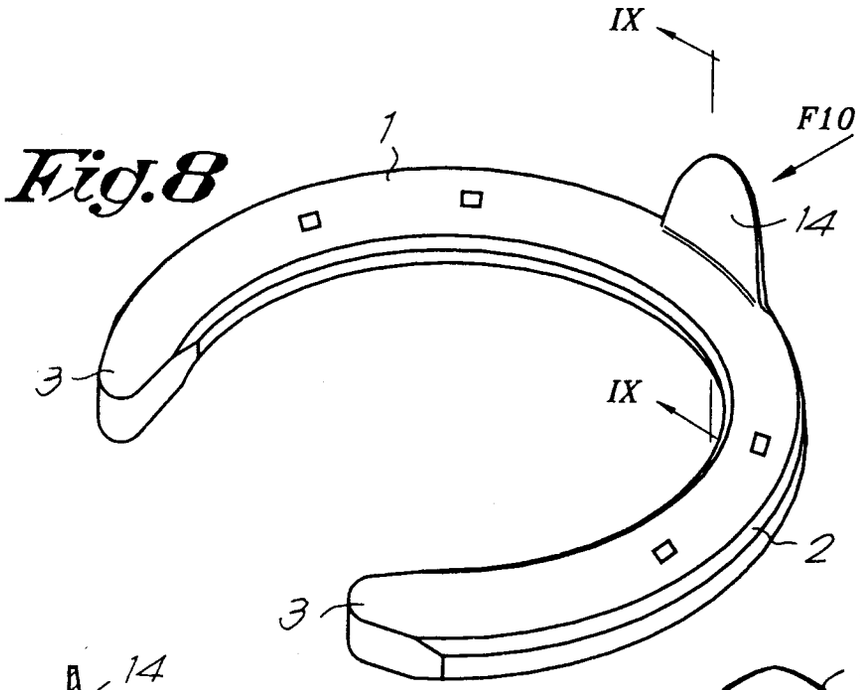

Fig.8

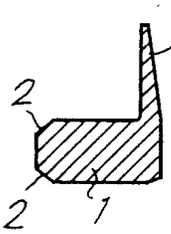

Fig.9

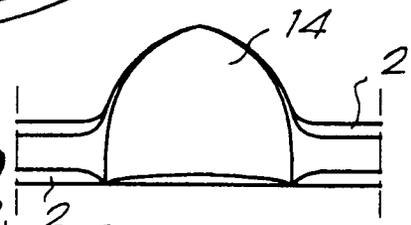

Fig.10

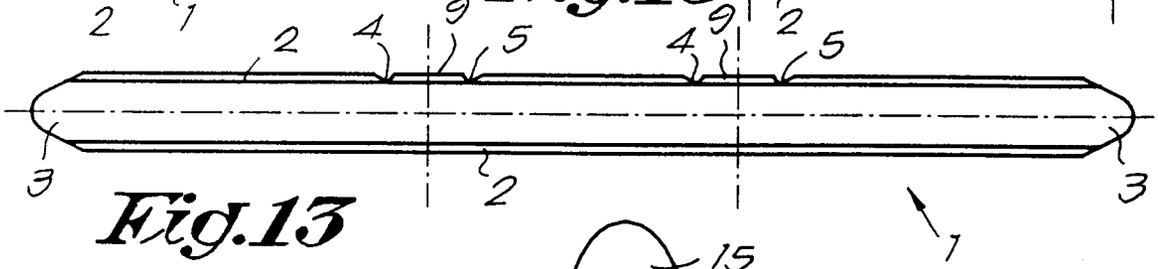

Fig.13

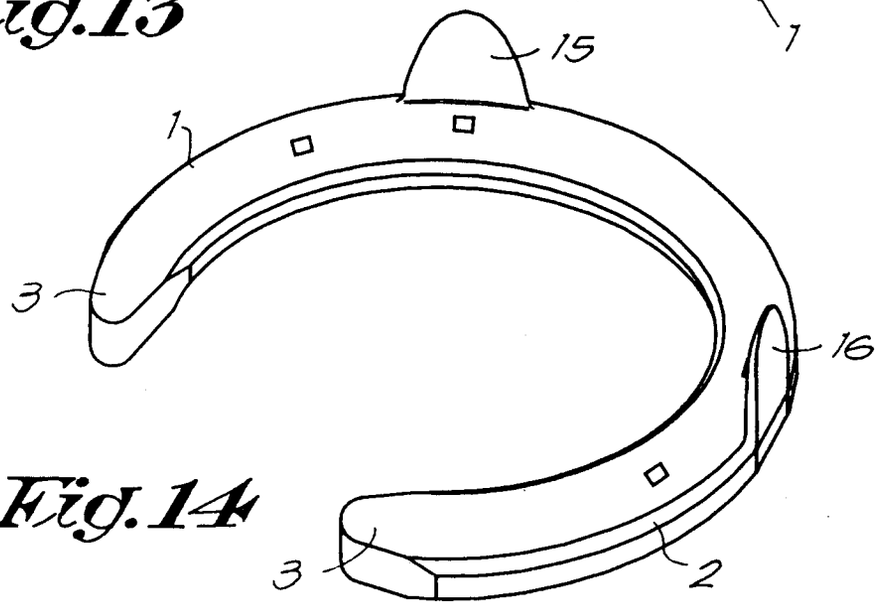

Fig.14