(19) Europäisches Patentamt
European Patent Office
Office européen des brevets

(11) EP 0 943 379 A3

(12) **EUROPEAN PATENT APPLICATION**

(88) Date of publication A3:
**17.05.2000 Bulletin 2000/20**

(43) Date of publication A2:
**22.09.1999 Bulletin 1999/38**

(21) Application number: **99104039.5**

(22) Date of filing: **16.03.1999**

(51) Int. Cl.[7]: **B21D 11/12**

(84) Designated Contracting States:
**AT BE CH CY DE DK ES FI FR GB GR IE IT LI LU MC NL PT SE**
Designated Extension States:
**AL LT LV MK RO SI**

(30) Priority: **20.03.1998 IT BO980178**

(71) Applicant: **Schnell S.p.A.**
**61032 Fano (Pesaro) (IT)**

(72) Inventor: **Montmarani, Massimo**
**61032 Fano (Pesaro) (IT)**

(74) Representative:
**Modiano, Guido, Dr.-Ing. et al**
**Modiano & Associati SpA**
**Via Meravigli, 16**
**20123 Milano (IT)**

(54) **Method for automatically bending metal profiled elements and the like, and machine for performing the method**

(57) A method for automatically bending metal profiled elements, particularly iron rods for reinforced concrete, consisting in feeding the profiled elements (2) to be cropped along a feed line (3), in order to bend a front end (2a) of the profiled elements in a first bending position arranged along the feed line. The advancement of the profiled elements is then actuated in order to make their front part rest on a guiding channel (16), and then the profiled elements (2) are cropped to a length which also includes the rear part to be bent. The rear part of the cropped profiled elements is shifted into a second bending position which lies above the feed line (3), by a limited extent which is sufficient to move past the space occupied by the mechanical elements arranged to the rear of the first bending position. Finally, the profiled elements are subjected to a measured longitudinal movement and a rear end (2b) of the profiled elements is bent in the second upper bending position.

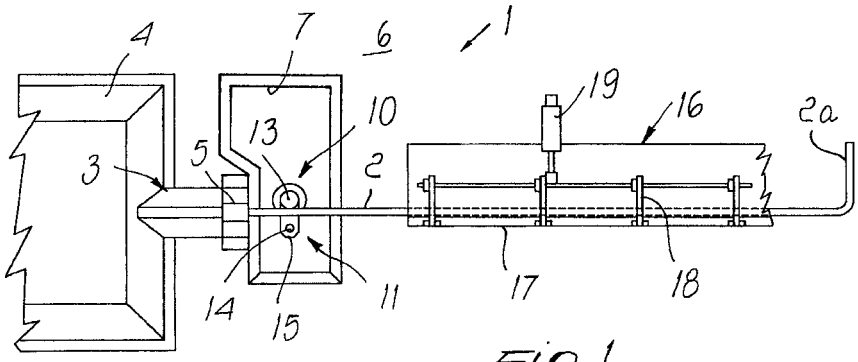


Fig.1

EP 0 943 379 A3

European Patent Office

# EUROPEAN SEARCH REPORT

Application Number
EP 99 10 4039

## DOCUMENTS CONSIDERED TO BE RELEVANT

| Category | Citation of document with indication, where appropriate, of relevant passages | Relevant to claim | CLASSIFICATION OF THE APPLICATION (Int.Cl.6) |
|---|---|---|---|
| X | EP 0 538 595 A (PIEGATRICI MACCH ELETTR) 28 April 1993 (1993-04-28) | 1 | B21D11/12 |
| A | * the whole document * | 6 | |
| P,X | EP 0 865 842 A (SCHNELL SPA) 23 September 1998 (1998-09-23) | 1,2,6 | |
| A | * column 11, line 1 - line 20; figures 9,15 * * column 9, line 28 - line 33; figure 10 * | 5,9 | |

TECHNICAL FIELDS SEARCHED (Int.Cl.6)

B21D
B21F

The present search report has been drawn up for all claims

| Place of search | Date of completion of the search | Examiner |
|---|---|---|
| THE HAGUE | 28 March 2000 | Ris, M |

CATEGORY OF CITED DOCUMENTS

X : particularly relevant if taken alone
Y : particularly relevant if combined with another document of the same category
A : technological background
O : non-written disclosure
P : intermediate document

T : theory or principle underlying the invention
E : earlier patent document, but published on, or after the filing date
D : document cited in the application
L : document cited for other reasons

& : member of the same patent family, corresponding document

EPO FORM 1503 03.82 (P04C01)

## ANNEX TO THE EUROPEAN SEARCH REPORT ON EUROPEAN PATENT APPLICATION NO. EP 99 10 4039

This annex lists the patent family members relating to the patent documents cited in the above-mentioned European search report.
The members are as contained in the European Patent Office EDP file on
The European Patent Office is in no way liable for these particulars which are merely given for the purpose of information.

28-03-2000

| Patent document cited in search report | Publication date | Patent family member(s) | Publication date |
|---|---|---|---|
| EP 0538595 A | 28-04-1993 | IT 1252984 B | 10-07-1995 |
| | | AT 122940 T | 15-06-1995 |
| | | CA 2080881 A | 22-04-1993 |
| | | DE 69202679 D | 29-06-1995 |
| | | DE 69202679 T | 25-01-1996 |
| | | DK 538595 T | 24-07-1995 |
| | | ES 2072674 T | 16-07-1995 |
| | | JP 5208220 A | 20-08-1993 |
| | | US 5285671 A | 15-02-1994 |
| EP 0865842 A | 23-09-1998 | IT M0970045 A | 21-09-1998 |

EPO FORM P0459

For more details about this annex : see Official Journal of the European Patent Office, No. 12/82