(19) Europäisches Patentamt
European Patent Office
Office européen des brevets

(11) EP 1 012 023 B1

(12) **EUROPEAN PATENT SPECIFICATION**

(45) Date of publication and mention of the grant of the patent:
09.04.2003 Bulletin 2003/15

(21) Application number: **98940445.4**

(22) Date of filing: **01.09.1998**

(51) Int Cl.[7]: **B61L 5/18**, G08G 1/095, F21S 8/00

(86) International application number:
PCT/GB98/02620

(87) International publication number:
WO 99/011498 (11.03.1999 Gazette 1999/10)

(54) **PLURAL-LED LIGHTS**

VERKEHRSLICHTSIGNAL MIT MEHREREN LEUCHTDIODEN

FEUX A PLUSIEURS DIODES ELECTROLUMINESCENTES

(84) Designated Contracting States:
AT BE CH CY DE DK ES FI FR GB GR IE IT LI LU MC NL PT SE

(30) Priority: **04.09.1997 GB 9718643**
24.10.1997 GB 9722368

(43) Date of publication of application:
28.06.2000 Bulletin 2000/26

(73) Proprietor: **Howells Railway Products Limited**
Wythenshawe, Manchester M22 4SS (GB)

(72) Inventors:
- **HOWELLS, David Peter**
Sale, Manchester M33 3PL (GB)
- **HOWELLS, Michael**
Wythenshawe, Manchester M22 4ZQ (GB)

(74) Representative: **Dodd, David Michael**
T.N.P. Services,
P.O.Box 13
Manchester M30 9FZ (GB)

(56) References cited:

EP-A- 0 330 165	**EP-A- 0 523 927**
EP-A- 0 726 554	**DE-A- 2 542 220**
FR-A- 2 426 381	**FR-A- 2 586 844**
FR-A- 2 588 109	**US-A- 5 636 057**

- **PATENT ABSTRACTS OF JAPAN vol. 096, no. 002, 29 February 1996 & JP 07 287043 A (SANKOSHA:KK), 31 October 1995**
- **PATENT ABSTRACTS OF JAPAN vol. 018, no. 589 (M-1701), 10 November 1994 & JP 06 219279 A (SANKOSHA:KK), 9 August 1994**

Note: Within nine months from the publication of the mention of the grant of the European patent, any person may give notice to the European Patent Office of opposition to the European patent granted. Notice of opposition shall be filed in a written reasoned statement. It shall not be deemed to have been filed until the opposition fee has been paid. (Art. 99(1) European Patent Convention).

EP 1 012 023 B1

Printed by Jouve, 75001 PARIS (FR)

Description

FIELD OF THE INVENTION

[0001] This invention has arisen specifically in relation to railway traffic signalling lights.

BACKGROUND TO THE INVENTION

[0002] Railway traffic signalling lights require considerable light intensity and conventionally use tungsten filament lamps, normally (at least in UK) with a back-up provision against first lamp or lamp filament failure and different lines of brightness visible to indicate normal operation and such failure resulting in resort to the back-up lamp/filament, respectively. Maintenance requirements and costs remain related to first tungsten lamp/filament failures, and it is an object of this invention to seek improvement in this respect.

[0003] German Offenlegungsschrift 25 42 220 A has proposed use of laser light for railway signalling and other lights, whether as a single gas laser with a condensing lens or plural laser diodes with individual condensing lenses.

[0004] Semiconductor light-emitting diodes (LEDs) are generally accepted as being inherently very much more reliable than tungsten filament lamps, but available light intensity is many orders of magnitude less. Indeed, even the dramatic improvements in LEDs evidenced by commercially available single devices with light outputs as high as fifteen candelas or so each do not begin to compare with tungsten filament lamps in terms of direct practical replacement for railway signalling lights, or any other applications with similar requirements. In relation to railway signalling lights it is a particular object of this invention to find a solution permitting practical use of LEDs.

[0005] The fairly obvious expedient of assembling a sufficient number of LEDs to produce a nominally adequate amount of light behind a conventional lamp glass, including same of Fresnel type, is not successful in practice, whether or not in front of a reflector. The lighted state is simply not sufficiently visible far enough away at least in high ambient light conditions. As will become evident, this situation is believed to be attributable to the inherently highly diffuse nature of light emission from LEDs and has been overcome herein by imposing desired and effective directionality.

SUMMARY OF THE INVENTION

[0006] According to this invention, there is provided a railway traffic signalling light comprising a plurality of light emitting diodes (LEDs) more than sufficient to produce total light emission adequate for intended usage, at least enough of said LEDs being energisable together to be so sufficient, the plurality of LEDs being deployed in an areal array in association with similarly areally distributed emitted light concentrating means effective in conjunction with overall light output delivery provision to produce output light of predominantly substantially parallel directionality, characterised by an overall output lens having an edge-adjacent sub-lens for sideways viewing of light operation.

[0007] Preferably, the number of LEDs is sufficient even after failure of some LED(s) to produce a totality of light emissions that is adequate for intended usage, the areal array in combination with emitted light concentrating means constitutes an effectively geometrically distributed light source for emitted light having substantially parallel directionality, and the light output delivery means includes output "glass" means (which might be of transparent plastics material, of course).

[0008] At least for railway traffic signalling lights, it is envisaged that tens, even more than a hundred, LEDs will be simultaneously energised, say at least 40, typically 50 to 80 or more. Minimum excess of LEDs over the number nomin-ally adequate for intended usage can be in accordance with known performance and failure rate of LEDs concerned and target servicing/replacement intervals, but is conveniently more and with sensing of intermediate number of failures, say 2%, perhaps 5% - 10% or more, redundancy and sensing anywhere desired below. Sensing is preferably accompanied by indication.

[0009] One suitable geometry for such array of LEDs is generally concave, say following prescribed curvature (s), say parabolic, or approximating thereto as adjacent subarray components of lesser curvature(s) or substantially flat. A corresponding suitable arrangement of the light concentrating means may generally follow the geometry of the array of LEDs, say as plural condensing lens elements that might correspond with appropriate sub-arrays of said array, and may serve to focus to a position having useful functional similarity to adequate tungsten lamp filament and customary output "glass", say or near at focus for Fresnel lens provisions.

[0010] Indeed, following comparison with a tungsten lamp, the combination of the array of LEDs and the light condensing lens elements can operate after the manner of an areally distributed light source concentrated by focussing so that all or most output light is as though forward emission directly from a tungsten lamp at said position, say effectively as resembling a tungsten lamp with a reflector focussing on the lamp filament rather than producing at least some other reflection, perhaps parallel beam, say to avoid heating problems from refocussing onto the tungsten lamp. If it is desired to go at least some way towards simulating such forward plus other reflected light emission of a tungsten filament lamp and reflector arrangement, suitable said condensing lens elements could be of a compound nature, say with medial or inner edge-adjacent parts producing substantially position-focussed light and outer parts producing substantially parallel beam light, or vice versa.

[0011] It is, however, technically feasible for the com-

bination of the array of LEDs and the light concentrating means to produce a predominantly parallel light beam, preferably divergent by less than about 2° or 3°, and said lens elements might be progressively different going outwardly for a generally concave array. Such substantially wholly parallel light beam may simplify output lens requirements, as could first discussed position-focussing for substantially wholly forwardly directed light from such position, say a point or line. Compound partly position focussed and partly otherwise directed light could facilitate use of existing output "glass" systems, i. e. as for tungsten lamp units.

[0012] Whilst there can be expected to be prima facie procurement and fabrication advantages in using substantially identical condensing lens elements and/or sub-arrays of LEDs in generally corresponding geometrical configurations, say represented by appropriately configured individual substrates carrying same, the lens elements and their configured transparent substrate might be moulded as an integral unit that would allow simple production even for different and/or compound lens element parts, i.e. with only some increase in initial tooling costs, perhaps not a great increase given impact of computer aided design and computer controlled toolmaking techniques. Indeed, the geometries of the LED array and lens element substrates could differ, say to aid assembly at least of the LEDs in banks/trees thereof, within what is compensatable by differing lens elements, that could include (for this or other purpose) varifocal features (rather than merely above-indicated bifocal features).

[0013] Connection of LEDs in plural banks/trees thereof in appropriate serial/parallel relation for electrical drive current facilitates further connection and interconnection, including with any desired degree of redundancy and alternative selection for active operation, say automatically at sensing some prescribed one or more failures of LEDs or blocks/trees thereof.

[0014] Practical alternative involves simply sensing voltage and/or current change resulting from failure of a predetermined one of more of the LEDs, and indicating such failure.

[0015] Other highly practical embodiments of this invention arise by departure from simulation of tungsten filament lamps, basically in favour of directly producing a beam of light having high directionality approaching parallel, preferably predominantly with only a few degrees of divergence, as to which up to about 5°C has been used for prototypes and is suggested without limitation against other divergences found to be practical.

[0016] Suitable geometries for the array of LEDs and the light concentrating means can have much less curvatures; indeed, be substantially flat in terms of substrate(s) or other carrier sheet(s) for the LEDs and for plural condensing lens elements, or as overall configuration of moulded multiple lens element means. A substantially coplanar array of substantially identical plano-convex condensing lens elements will effectively have substantially coplanar foci in or near to which focal plane the array of LEDs can be positioned. In one implementation, there is correspondence between sub-groups of the LEDs and individual condensing lens elements, i.e. rather than one-one-one correspondence between LEDs and condensing lens elements (which is feasible but felt likely to be less advantageous than first preference for two or more LEDs per sub-group).

[0017] In a first prototype implementation, sub-groups of three LEDs a few millimetres in diameter were disposed close together in mounting holes with centres in a line centred relative to a respective plano-convex condensing lens element having a diameter of about 20 millimetres and a focal length of about 100 millimetres. Occurrence of rings of brightness was noted using such sub-groups of LEDs and condensing lens elements, and overall brightness was readily adjusted by selectively altering the population of selected sub-groups specifically not loading one of the three possible in-line LED sites. Whilst such selection should be calculable mathematically with sufficiently detailed areal brightness analysis, selection by trial and error is seen as practical.

[0018] Alternatives for the sub-group populations and dispositions of LEDs include differently angled lines and numbers of LED sites with or without a central LED, sites for LEDs at apices or corners of notional triangles (not necessarily equilateral), rectangles (not necessarily square), and polygons (not necessarily regular). Other alternatives include positioning in front of or behind true focal points of simple condensing lenses at least by up to matching intercept spacings of focal lines with spread of LEDs for corresponding sub-groups of LEDs and condensing lens elements, or even variation of curvature or peripheral shape of the condensing lens elements to produce a small but spread focal area rather than single focal point.

[0019] In an array of over 100 LEDs, say in linear sub-groups of three as above indicated, with circular base condensing lens elements in concentrated, staggered relation, it was interesting to find that general diffusion of emitted LED light was such that loss of light from one LED in a sub-group resulted in much less than one-third loss of light emission from that corresponding condensing lens element.

[0020] One particular concise array of condensing lens elements is generally hexagonal with one more lens element in successive rows inwardly from any side. A regular hexagonal array with five lens element sites per side leads to 61 sites in total of which one was left unused for reasons related to sensing failure(s) of LED (s).

[0021] Suitable sensing can be by such simple expedient as dividing the totality of LEDs into equal groups each associated with its own current sensing circuitry with the groups wired in parallel relative to overall sensing circuitry. The relationship of populations of these groups to the totality of LEDs can be such that loss of light from a whole group leaves overall emitted light

above a relevant minimum brightness/light output standard. The interrelationship between these groups and the above sub-groups can readily be such that even loss of light from a whole group of LEDs will not result in any sub-group losing more than one LED, preferably no two adjacent sub-groups losing less than one LED between them, or as may be otherwise desired or preferred.

[0022] An inescapable feature of predominantly near parallel, only slightly divergent output beams of light is that the lighted states will not be observable outside the beams, say at the side of a warning light. This is overcome by an overall output lens having an edge-adjacent sub-lens for sideways viewing of light operation which can be a part of or patch on a beam output "glass" that is of at least diffusing nature, even sideways light-directing nature at an edge of such "glass".

[0023] Implication of use without diffusion of output light is to be taken as preference, at least for the high light output required of railway signalling/warning lamps, but not necessarily limiting, say relative to other applications found to be feasible.

[0024] It is the case that suitable LEDs are available to give red, amber and green light signals directly, i.e. through a clear "glass". However, it is equally feasible to use high intensity substantially "white light" LEDs and use appropriately coloured "glasses", or specific colouration filters.

[0025] At least with well focussed, say up to no more than about 5%, preferably about 2%, divergent beams advantageous for railway signalling use, a further aspect of this inven-tion resides in providing for communication of intelligible information by modulation of the signal light beam as such, say at least for audio and/or visual display of a "stop" message along with a "stop" signal light state. Such stop message could be of a pre-recorded standard type, and there can be other standard messages to accompany any signal light state, whether continuously transmitted or initiated by actual sensed presence of an approaching train or by expectation, say based on scheduled approach time. Further special messages are equally readily transmitted, whether called up from a repertoire of pre-recorded messages intended to suit various circumstances or corresponding to use of a microphone. Engines and cabs will, of course, then need to be equipped with a light-sensitive sensing transducer and suitable demodulation means to produce drive signals for an audio loudspeaker (or head-phones) and/or a visual display, which provision can be of a quite simple and inexpensive nature.

[0026] Such modulated signal light beam communication provision is well-suited for use along with further communication provision. Convenience and advantage is seen in such further provision also being of a modulated light beam type, even where, as is particularly envisaged, the signal light means is associated with a different light transducer cell, say for short range communication at least with a stopped train then quite close to the signal lights as would suit any special circumstances, including providing information to be passed on to passengers of a'passenger train. Separation of availability of the first-mentioned and further communication facilities is readily achieved, say relative to the latter being enabled only after the train has got so close to the signals that its related light transducer is by then out of the relevant signal beam, whether or not such engine-associated transducer is shared with the further communication provision, as is feasible, perhaps advantageous. Indeed, the two communications systems can be of so much the same or similar type as to share transmission modulation and/or reception demodulation means. Moreover, preferred such further communication are readily extended to initiate and service data communication, whether telemetry from the tain or further information to the train and its telemetry and/or computer systems etc control, further whether or not always initiated or only so if the train slows or stops.

BRIEF DESCRIPTION OF THE DRAWINGS

[0027] Specific implementation will now be described, by way of example, with reference to the accompanying diagrammatic drawing(s), in which:

Figure 1 shows outline for a signalling light;
Figure 2 shows outline for a first embodiment;
Figure 3 indicates useful arrangements of condensing lens elements and LEDs;
Figure 4 is an outline wiring and fault sensing diagram;
Figure 5 is an alternative outline wiring diagram; and
Figure 6 is an outline block diagram for light modulated communications provision(s).

SPECIFIC DESCRIPTION OF ILLUSTRATED EMBODIMENTS

[0028] In Figure 1, a generally concave array 111 of LEDs 112 is shown with chain-dash ray lines through an also generally concave light concentrating arrangement 115 of condensing lens elements 16 shown both focussing light to position 121 and otherwise passing light in overlapping relation to output lens system 125 shown specifically as of double convex Fresnel lens type 126A, B through and out of which light ray lines go continuous. Whilst illustrated light ray lines are intended to be helpful, the actual situation of highly diffuse light from the LEDs 112 is difficult to illustrate, and a viable conception may well be as a suffusion of light between the LEDs 112 and the lens elements 116 with the latter generally concentrating most if not all of the emitted light to the position 121.

[0029] The LEDs 112 are shown carried by a generally concave substrate 113 that should be non-transpar-

ent and may be light reflective within its concavity, and/or peripherally about spacing from the condensing lens system 115. The LEDs 112 may be connected in banks or trees and/or on individual substrates (not shown) that could fit onto facets in the concavity of the overall substrate 113 or into a plural frame-like alternative, say with electrical connections through to the generally convex rear of substrate 113.

[0030] The lens elements 116 are shown carried by a transparent generally concave substrate 117, which may have flat facets 118 in its concavity and an also faceted or smoothly convex other surface. The whole (116, 117) might well be integrally moulded as a unit from transparent, probably plastics, material of suitable refractive index; and the lens elements 116 may be of simple convex shapes or of more complex compound shapes, say at least with flattened tops as implied for some unfocussed through-passage of light, or otherwise, say for substantially parallel beam output (not shown).

[0031] If the substrates 113 and 117 are concave only through the plane of the drawings, the position 121 will be a line. If the substrates 113 and 117 are concave also through the plane of the [drawing] , the position 121 can have less length, in the limit be a point. Such individual LED bank/tree substrates could correspond one-for-one with the condensing lens elements 116.

[0032] In Figure 2, a substantially flat planar array 211 of LEDs 212 is shown with chain-dash light ray lines through a substantially parallel light concentrating arrangement 215 of condensing lens elements 216 shown (on similar simplified basis to Figure 1) both producing substantially parallel beam light and otherwise passing light in overlapping slightly divergent relation to and through an output "glass" provision 225 shown substantially flat.

[0033] The LEDs 212 are shown carried by a substantially flat sheet, plate or substrate 213 that is non-transparent, even preferably light reflective facing the condensing lens elements 216, that could be in one-for-one correspondence with the LEDs 212, see solid lines of Figure 2, or with subgroups thereof, see dashed in Figure 2 and LED mounting positions as in-line triplets at 312A, B, C in Figure 3 as was realised in a prototype by slightly siamesed mounting holes in a bright metal plate 313 (visible in superposition). The lens elements 216 are shown carried by a flat sheet, plate or substrate 217 that could be transparent or, and perhaps preferably light reflective facing the LEDs 212, see lens element mounting position 316A corresponding to one of the LED position triplets 312A, B, C in Figure 3, as was realised in a prototype by closely arranged lens mounting holes (indicated mostly by centres 316X in registration with central ones 312B of the LED positions in a bright metal plate 317, say to present individual plano-convex lens elements with their flat bases coplanar with inner surface of the plate (216, 217 in Figure 2). Preferred practical alternatives for volume production are being developed as a printed circuit board for the LED carrier 217 and as a composite moulded light condensing lens plate of transparent plastic material of suitable refractive index for integral lens element formations.

[0034] At, least for LEDs subgrouped into in-line triplets 312A, B, C for corresponding condensing lens elements as at 316A, and overall output light beam at least predominantly of low divergence from parallel, say up to about 5°, it has been found useful to space the LEDs from the lens elements by more than focal lengths of the latter, say at up to 120 millimetres or more for focal lengths of 100 millimetres. Overall compensation for unwanted optical effects, such as relatively light and/or dark ring effects individually from the condensing lens elements 216, and/or achieving improved optical effects, could involve selective use of other sub-groupings of LEDs 212, including some reduced to doublets (whether simply by omission(s) of one of LED(s) at 312A, B, C or by other spacing, say intermediate spaced as at 316B); and/or of other orientations of in-line LED triplets including but not limited to some perpendicularly, see at 316C, (perhaps alternatingly), and/or following or transversely to radial directions, see at 316D, E; and/or other geometrical arrangements of subgroups of LEDs, say at apices/corners of triangles, rectangles or polygons with equivalent medial/central LEDs; and/or other lay-out geometries for the condensing lens elements 216 and/or those elements themselves, and/or optically compound lens element formations.

[0035] The lay-out geometry shown in Figure 3 is particularly compact as a regular hexagonal array of the condensing lens elements 316 shown on a conveniently circular carrier 317, see partial intercalation of successive "rows" with progressive one position increases from each edge of the array. With five lens element positions per side, the hexagonal array of Figure 3 allows 61 such positions, affording up to 183 LEDs for full triplet subgroups. Numbers for lens element positions per side are, of course, 37 lens element positions and up to 111 LEDs.

[0036] Despite inherently vastly higher reliability of LEDs compared with tungsten filament lamps, detection of failed LEDs is desirable in a manner related to minimum output light specification/requirement. In practice, appropriate failure detection provision, it is useful both to provide redundancy of LEDs, i.e. more than required for minimum performance, and to take into account and benefit from diffused nature of LED light emission, for example that a prototype as in Figure 3 showed much less than one-third loss of light from a condensing lens element 316 for which one of its corresponding triplet of LEDs 312A, B, C was not lit up, actually only about 20% light loss.

[0037] Figure 4 shows the totality of LEDs divided into six equal groups 411 - 416 severally connected in parallel arms 421 - 426 of a serial/parallel circuit 410, each group (411 - 416) and arm (421 - 426) having an associated current monitoring circuit 431 - 436, and the

whole circuit 410 having direct current supply 441, parallel capacitive 442 and resistance/warning light 443/444 branches, and resistive overall monitoring via resister 445 and a.c. source/detector 446. The LED groups 411 - 416 each contain no more than one LED from each lens element related subgroup (312A, B, C), preferably adjacent rows thereof.

[0038] For a light having 20% over-specification of LEDs relative to minimum required overall light output, the provision of Figure 4 would allow loss of one whole group/ arm of LEDs and still be well above such minimum. Fault indication might thus be limited or staged relative to loss of such whole group/arm or up to that number of individual LEDs otherwise distributed, perhaps first or second indications for one or a low number of LED failures and another for a higher number and/or whole group/arm.

[0039] Inventive provision hereof covers need for close-range observation of light state outside such beam despite predominance of low-divergence main overall light output. Part or an addition 226 to overall output "glass" 225'is indicated in Figure 2 for directing/ diverting part of output light much more sideways, say as an outer sectoral lens part/addition 226, conveniently in/ on a convex output "glass" 225'as shown dashed in Figure 2, say at position 326 in Figure 3.

[0040] Alternative fault detection etc strategies include normal first operation with part only of the totality of LEDs 212 lit up, say one of the groups 411 - 416 as a stand -by brought in after another of the groups 411 - 416, or other predetermined number of the LEDs 212, fails. Indeed, any possible LED positions not used in pursuit of multiples in and of groups/arms 411-416/421-426 could be used addit-ionally or alternatively for fault indication, say in said or another output "glass" part or addition for sideways or other viewing.

[0041] Turning to Figure 5, alternative provision and wiring of LEDs 512 is indicated in doubletons and singletons, as have been found to be adequate for required light output from such provision of LED locations as first indicated for Figure 3. Wiring is indicated as simply being wholly in parallel for each and all of the LEDs, see between full array traversing voltage lines 551, 552 and branching therefrom to each LED. LED doubletons 512D are shown only in the middle three rows, specifically at ends thereof then inwardly alternating with singletons. Warning of exceeding whatever may be the desired extent of tolerable failure of the LEDs is indicated by current measuring circuitry 555, normally exceeded minimum threshold value setting/sensing means 556, and wiring means 557 operative on loss of output 558 from the latter (556).

[0042] Referring to Figure 6, signals control 611 is shown for lamp LEDs drive means 613 with a modulator 614 interposed before the lamp LEDs 612 as such for superimposing standard message(s) from pre-recorded source 615 as modulation of the lamp beam. At the train/ engine, photodetection means 621 has modulated information recovered from its output 622 by demodulator 623 for visual display at 624 and/or audio reproduction at loudspeaker or headphones 625. Minimum in terms of pre-recorded standard message(s) provision is seen as a train-must-stop message accompanying a red light signal, either continuously or in response to any normal track-associated train-approaching sensing/detection and/or time-related train-approach expectation as input to or part of the signals control 611. There may, of course, be other standard messages, for example safe-for-train-to-pass accompanying the green light signal, or whatever.

[0043] Provision is also shown by way of further control 631 for special message(s) 632, whether also pre-recorded, perhaps loop-recorded or otherwise supplied at 633 as and when required, or selected from some repertoire of pre-recordings at 632; in any event, alternatively or addit-ionally provided to the modulator 614, and intendedly demodulated and made available in the engine cab visually at display 624 and/or audibly at speaker 625.

[0044] Further light modulated/demodulated communications provision is shown by way of light emitting/detecting cells 635 and 636 associated with the signals and with the engine, respectively. The engine-associated light cell 636 may, perhaps preferably usually will, be the same as and incorporate the functions of the photodetector 621, at least if not incompatible with envisaged much shorter range of communication for these further provisions using light cells 635 and 636, typically close to the signals concerned, and usable at least when a train has stopped for a red signal light.

[0045] Preferred two-way voice communication is indicated by way of control, transmission modulation and reception demodulation means 637C, T, R associated with the signals 638C, T, R associated with the engine each with further associated microphone 641S, E and speaker 642S, E provisions that may conveniently be embodied in a telephone-like handset, including hands-free type. at least at the engine and as implied by the drawing relative to sharing of the speaker 625. Recording provisions are further indicated at 643S, E at both of the signals location and the engine cab, whether for so-called "black box" or other purpose.

[0046] Figure 6 further shows preferred two-way data commun-ication by way of control transmission and receiving means 644C,T,R associated with the signals and similarly controlled from 631, and 645C, T, R at the engine cab, along with associated data stores 646 and 647, respectively; and telemetry module 648 at the engine cab.

Claims

1. Railway traffic signalling light comprising a plurality of light emitting diodes (LEDs) (212; 312; 512) more than sufficient to produce total light emission ade-

quate for intended usage, at least enough of said LEDs being energisable together to be so sufficient, the plurality of LEDs being deployed in an areal array (211; 316X) in association with similarly areally distributed emitted light concentrating means (116; 216; 316) effective in conjunction with overall light output delivery provision (225') to produce output light of predominantly substantially parallel directionality, **characterised by** an overall output lens (225') having an edge-adjacent sub-lens (226: 326) for sideways viewing of light operation.

2. Signalling light according to claim 1, wherein the combination of the LEDs (212; 312; 512), the light concentrating means (215; 316) and the overall output light delivery provision (225') is such that said substantially parallel directionality involves less than about 5% divergence from strictly parallel.

3. Signalling light according to claim 2, wherein said combination (212, 312, 512; 216, 316; 225') is such that said divergence is less than about 2%.

4. Signalling light according to claim 1, 2 or 3, comprising at least 40 LEDs (212; 312; 512).

5. Signalling light according to claim 4, comprising between about 50 and about 80 LEDs (212; 312; 512).

6. Signalling light according to any preceding claim, comprising means (431 - 436) for sensing failure of a number of LEDs (212; 312; 512) less than affects sufficiency for intended usage.

7. Signalling light according to claim 6, comprising means (446) for indicating said sensing.

8. Signalling light according to any preceding claim, wherein the LEDs (212; 312) are connected in series within groups (411 - 416) connected in parallel and each having member LEDs spread areally over said array (111; 211; 312).

9. Signalling light according to claim 8, wherein the groups (411 - 416) are selectable for substitution for energisation purposes of one group (411 - 416) with one or more failed LEDs by another of the groups (411 - 416).

10. Signalling light according to claim 8 or claim 9, wherein sub-groups (312A - C) of locally proximate LEDs have their LEDs in different said groups (411 - 416).

11. Signalling light according to any preceding claim, wherein the light concentrating means (215; 316) comprises an areally distributed array of plural condensing lens elements (216; 316A - C).

12. Signalling light according to claim 11, wherein at least some of the lens elements (316) have areal correspondence with associated sub-groups of two or more LEDs (312A - C) that are locally proximate.

13. Signalling light according to claim 12, wherein each said lens element is associated with one or two of the LEDs (312; 512, 512D).

14. Signalling light according to claim 12, wherein each said lens element (316) is associated with one, two or three of the LEDs (312A - C).

15. Signalling light according to any preceding claim, wherein the array of LEDs has a concave geometry.

16. Signalling light according to any one of claims 11 to 15, wherein the array of lens elements has a concave geometry.

17. Signalling light according to any preceding claim, wherein the array of LEDs (212; 312) has a flat geometry.

18. Signalling light according to any one of claims 11 to 15 or claim 17, wherein the array of lens elements (216; 316) has a flat geometry.

19. Signalling light according to any preceding claim, comprising means (614) for modulating the light output in accordance with intelligible information.

20. Signalling light system comprising a signalling light according to claim 19 and traffic-borne receiving means (623) for deriving said information.

21. Signalling system according to claim 20, wherein the signalling light further has receiving means (635) cooperating with further traffic-borne transmitting means (636) for further modulated communication of intelligible information.

22. Signalling system according to claim 21, wherein the further transmitting and receiving means (637, 638) are for other than light-modulated communication.

Patentansprüche

1. Signalleuchte für den Eisenbahnverkehr, die eine Vielzahl Licht aussendender Dioden (LEDs) (212; 312; 512) aufweist, die mehr als ausreichend dafür sind, eine Gesamtlichtabstrahlung zu erzeugen, die für den beabsichtigten Einsatz angemessen ist, wobei zumindest genug dieser LEDs gemeinsam mit Energie versorgt werden können, um diese ausreichende Lichtabstrahlung zu erreichen, wobei die

Vielzahl von LEDs in einem flächigen Feld (211; 316X) in Verbindung mit ebenfalls flächig verteilten Einrichtungen zum Konzentrieren ausgesendeten Lichtes (116; 216; 316) eingesetzt wird und in Verbindung mit einer Vorrichtung für die Abgabe des gesamten Lichtausstoßes (225) wirksam ist, um ein Ausstoßlicht von vorherrschend im Wesentlichen paralleler Ausrichtung zu erzeugen, **gekennzeichnet durch** eine Gesamtausstoßlinse (225'), die eine neben dem Rand angeordnete Unterlinse (226; 326) für das seitliche Sehen des Lichtbetriebs aufweist.

2. Signalleuchte nach Anspruch 1, **dadurch gekennzeichnet, dass** die Kombination der LEDs (212; 312; B12), der Lichtkonzentrationseinrichtung (215; 316) und der Vorrichtung für die Abgabe des gesamten Lichtausstoßes (225') so gestaltet ist, dass die im Wesentlichen parallele Ausrichtung eine Abweichung von weniger als 5 Prozent von der exakten Parallelität aufweist.

3. Signalleuchte nach Anspruch 2, **dadurch gekennzeichnet, dass** die Kombination (212, 312, 512; 216, 316, 225') so gestaltet ist, dass die Abweichung weniger als etwa 2 Prozent beträgt.

4. Signalleuchte nach Anspruch 1, 2 oder 3, die zumindest 40 LEDs (212; 312; 512) aufweist.

5. Signalleuchte nach Anspruch 4, die zwischen etwa 50 und etwa 80 LEDs (212; 312; 512) aufweist.

6. Signalleuchte nach einem der vorhergehenden Ansprüche, die Einrichtungen (431 - 436) zum Erkennen des Ausfalls einer Anzahl von LEDs (212; 312; 512) aufweist, die so gering ist, dass die ausreichende Lichtstärke für den beabsichtigten Einsatz nicht beeinträchtigt wird.

7. Signalleuchte nach Anspruch 6, die eine Einrichtung (446) für das Anzeigen des erkannten Ausfalls aufweist.

8. Signalleuchte nach einem der vorhergehenden Ansprüche, **dadurch gekennzeichnet, dass** die LEDs (212; 312) in Gruppen (411 - 416) in Reihe geschaltet sind, die ihrerseits parallel geschaltet sind und deren jeweilige LEDs flächig über das Feld (111; 211; 312) verteilt sind.

9. Signalleuchte nach Anspruch 8, **dadurch gekennzeichnet, dass** die Gruppen (411 - 416) wählbar sind, um bei der Energiezufuhr zu einer Gruppe (411 - 416), die eine oder mehrere ausgefallene LEDs aufweist, diese Gruppe durch eine anders Gruppe (411 - 416) zu ersetzen.

10. Signalleuchte nach Anspruch 8 oder 9, **dadurch gekennzeichnet, dass** LEDs von Untergruppen (312A - C) örtlich benachbarter LEDs in verschiedenen Gruppen (411 - 416) angeordnet sind.

11. Signalleuchte nach einem der vorhergehenden Ansprüche, **dadurch gekennzeichnet, dass** die Lichtkonzentrationseinrichtung (215; 316) ein flächig aufgeteiltes Feld einer Vielzahl von Sammellinsenelementen (216; 316A - C) aufweist.

12. Signalleuchte nach Anspruch 11, **dadurch gekennzeichnet, dass** zumindest einige der Linsenelements (316) flächig zugehörigen Untergruppen aus zwei oder mehreren LEDs (312A - C) entsprechen, die örtlich nahe beieinander angeordnet sind.

13. Signalleuchte nach Anspruch 12, **dadurch gekennzeichnet, dass** jedes Linsenelement einer oder zwei der LEDs (312; 512; 512D) zugeordnet ist.

14. Signalleuchte nach Anspruch 12, **dadurch gekennzeichnet, dass** jedes Linsenelement (316) einer, zwei oder drei der LEDs (312A - C) zugeordnet ist.

15. Signalleuchte nach einem der vorhergehenden Ansprüche, **dadurch gekennzeichnet, dass** das Feld von LEDs eine konkave Geometrie aufweist.

16. Signalleuchte nach einem der Ansprüche 11 bis 15, **dadurch gekennzeichnet, dass** das Feld von Linsenelementen eine konkave Geometrie aufweist.

17. Signalleuchte nach einem der vorhergehenden Ansprüche, **dadurch gekennzeichnet, dass** das Feld von LEDs (212; 312) eine ebene Geometrie aufweist.

18. Signalleuchte nach einem der Ansprüche 11 bis 15 oder Anspruch 17, **dadurch gekennzeichnet, dass** das Feld von Linsenetementen (216; 316) eine ebene Geometrie aufweist.

19. Signalleuchte nach einem der vorhergehenden Ansprüche, die eine Einrichtung (614) zum Modulieren des Lichtausstoßes gemäß verständlicher Informationen aufweist.

20. Signalleuchtensystem, das eine Signalleuchte nach Anspruch 19 und eine am Verkehrsmittel angebrachte Empfangseinrichtung (623) zum Ableiten der besagten Information aufweist.

21. Signalsystem nach Anspruch 20, **dadurch gekennzeichnet, dass** die Signalleuchte weiterhin eine Empfangseinrichtung (635) aufweist, die mit ei-

ner weiteren am Verkehrsmittel angebrachten Sendeeinrichtung (636) zusammenwirkt, um eine weitere modulierte Kommunikation verständlicher Informationen auszuführen.

22. Signalsystem nach Anspruch 21, **dadurch gekennzeichnet, dass** weitere Sende- und Empfangseinrichtungen (637, 638) anderen Zwecken als der lichtmodulierten Kommunikation dienen.

Revendications

1. Feu de signalisation pour trafic ferroviaire comprenant une pluralité de diodes électroluminescentes (DEL) (212 ; 312 ; 512) largement suffisante pour produire une émission de lumière totale adaptée à l'usage prévu, un nombre au moins suffisant desdites DEL pouvant être activées en même temps de façon à être ainsi perceptibles, la pluralité de DEL étant déployée en une matrice aréolaire (211 ; 316X) en association avec des moyens de concentration de lumière émise similairement répartis de manière aréolaire (116 ; 216 ; 316) servant, en combinaison avec un dispositif de délivrance de rendement lumineux maximal (225'), à produire une lumière de sortie de direction essentiellement sensiblement parallèle, **caractérisé par** une lentille de rendement maximal (225') ayant une sous-lentille adjacente au bord (226 ; 326) permettant une visualisation latérale du fonctionnement du feu.

2. Feu de signalisation selon la revendication 1, dans lequel la combinaison des DEL (212 ; 312 ; 512), des moyens de concentration de lumière (215 ; 316) et du dispositif de délivrance de rendement lumineux maximal (225') est telle que ladite direction sensiblement parallèle suppose moins de 5% environ de divergence par rapport à une direction strictement parallèle.

3. Feu de signalisation selon la revendication 2, dans lequel ladite combinaison (212, 312, 512 ; 216, 316 ; 225') est telle que ladite divergence est inférieure à environ 2%.

4. Feu de signalisation selon la revendication 1, 2 ou 3, comprenant au moins 40 DEL (212 ; 312 ; 512).

5. Feu de signalisation selon la revendication 4, comprenant entre environ 50 et environ 80 DEL (212 ; 312 ; 512).

6. Feu de signalisation selon une quelconque revendication précédente, comprenant des moyens (431-436) destinés à détecter une défaillance d'un nombre de DEL (212 ; 312 ; 512) inférieur à ce qui nuirait à l'obtention d'un nombre suffisant pour l'usage prévu.

7. Feu de signalisation selon la revendication 6, comprenant des moyens (446) destinés à signaler ladite détection.

8. Feu de signalisation selon une quelconque revendication précédente, dans lequel les DEL (212 ; 312) sont connectées en série à l'intérieur de groupes (411-416) connectés en parallèle et ayant chacun des DEL membres réparties de manière aréolaire sur ladite matrice (111 ; 211 ; 312).

9. Feu de signalisation selon la revendication 8, dans lequel les groupes (411-416) peuvent être sélectionnés afin de permettre le remplacement pour activation d'un groupe (411-416) ayant une ou plusieurs DEL défaillantes par un autre des groupes (411-416).

10. Feu de signalisation selon la revendication 8 ou la revendication 9, dans lequel des sous-groupes (312A-C) de DEL localement rapprochées ont leurs DEL intégrées dans plusieurs desdits groupes (411-416).

11. Feu de signalisation selon une quelconque revendication précédente, dans lequel les moyens de concentration de lumière (215 ; 316) comprennent une matrice répartie de manière aréolaire de plusieurs éléments formant lentilles condensatrices (216 ; 316A-C) .

12. Feu de signalisation selon la revendication 11, dans lequel au moins certains des éléments formant lentilles (316) sont en correspondance aréolaire avec des sous-groupes associés de deux DEL ou plus (312A-C) qui sont localement rapprochées.

13. Feu de signalisation selon la revendication 12, dans lequel chacun desdits éléments formant lentilles est associé à une ou deux des DEL (312 ; 512, 512D).

14. Feu de signalisation selon la revendication 12, dans lequel chacun desdits éléments formant lentilles (316) est associé à une, deux ou trois des DEL (312A-C).

15. Feu de signalisation selon une quelconque revendication précédente, dans lequel la matrice de DEL présente une géométrie concave.

16. Feu de signalisation selon l'une quelconque des revendications 11 à 15, dans lequel la matrice d'éléments formant lentilles présente une géométrie concave.

17. Feu de signalisation selon une quelconque reven-

dication précédente, dans lequel la matrice de DEL (212 ; 312) présente une géométrie plane.

18. Feu de signalisation selon l'une quelconque des revendications 11 à 15 ou selon la revendication 17, dans lequel la matrice d'éléments formant lentilles (216 ; 316) présente une géométrie plane.

19. Feu de signalisation selon une quelconque revendication précédente, comprenant des moyens (614) pour moduler le rendement lumineux en fonction d'informations intelligibles.

20. Système de feu de signalisation comprenant un feu de signalisation selon la revendication 19 et des moyens de réception à bord (623) destinés à dériver lesdites informations.

21. Système de signalisation selon la revendication 20, dans lequel le feu de signalisation comprend en outre des moyens de réception (635) coopérant, avec des moyens de transmission à bord supplémentaires (636) pour permettre une communication modulée supplémentaire d'informations intelligibles.

22. Système de signalisation selon la revendication 21, dans lequel les moyens supplémentaires de réception et de transmission (637, 638) sont utilisés à des fins autres qu'une communication par modulation de lumière.

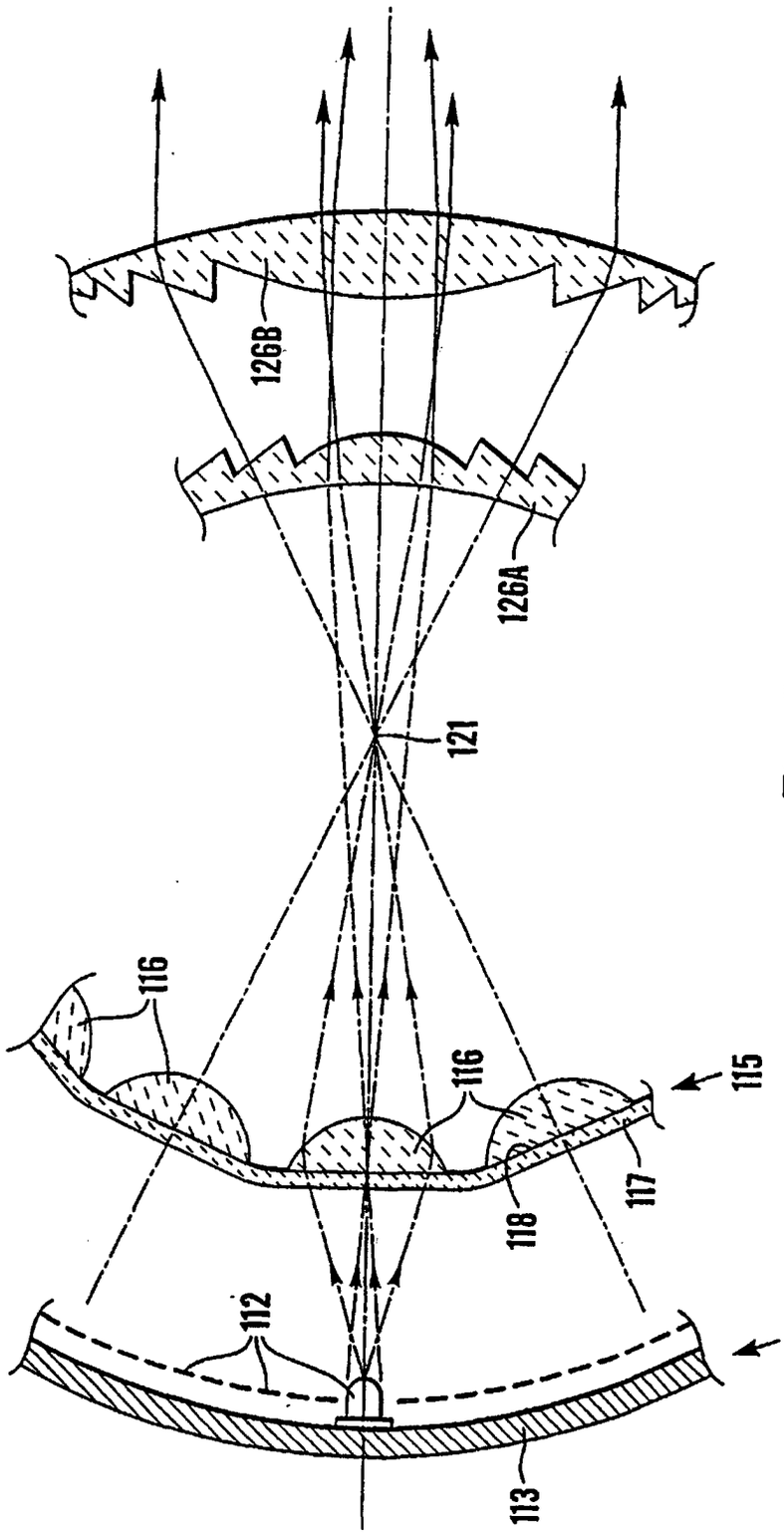

Fig. 1

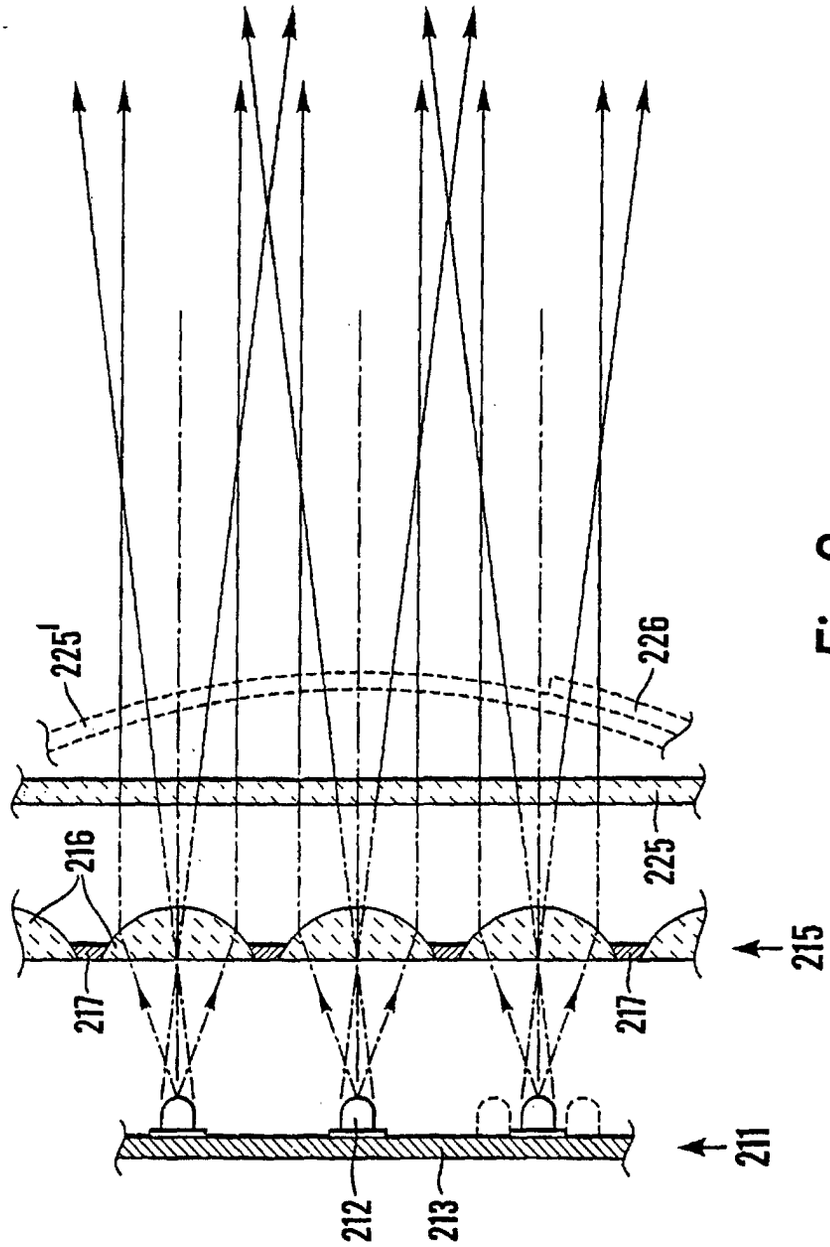

Fig.2

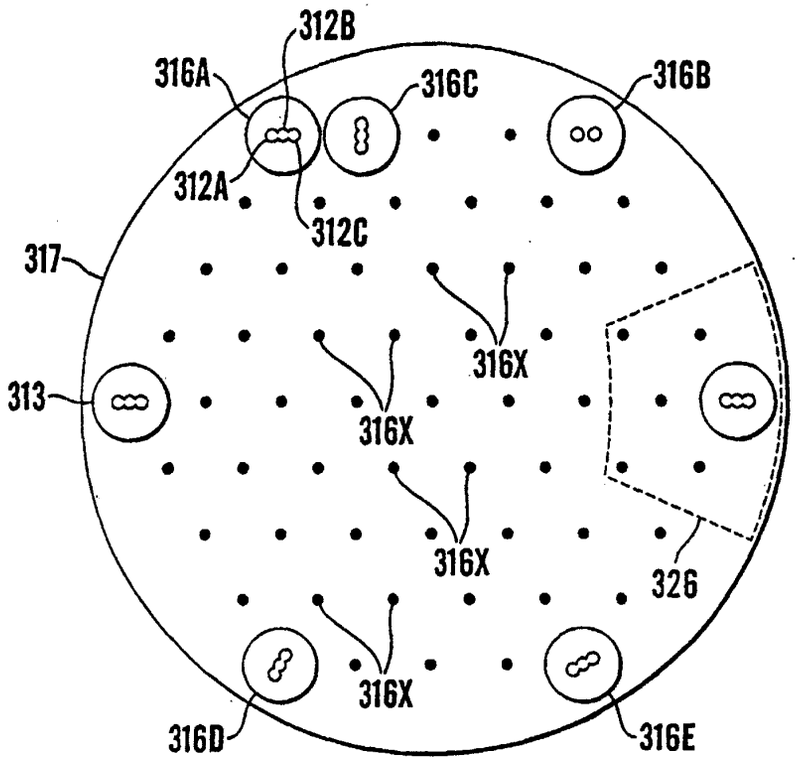
312B
316A
316C
316B
312A
312C
317
316X
313
316X
316X
326
316X
316D
316E

Fig.3

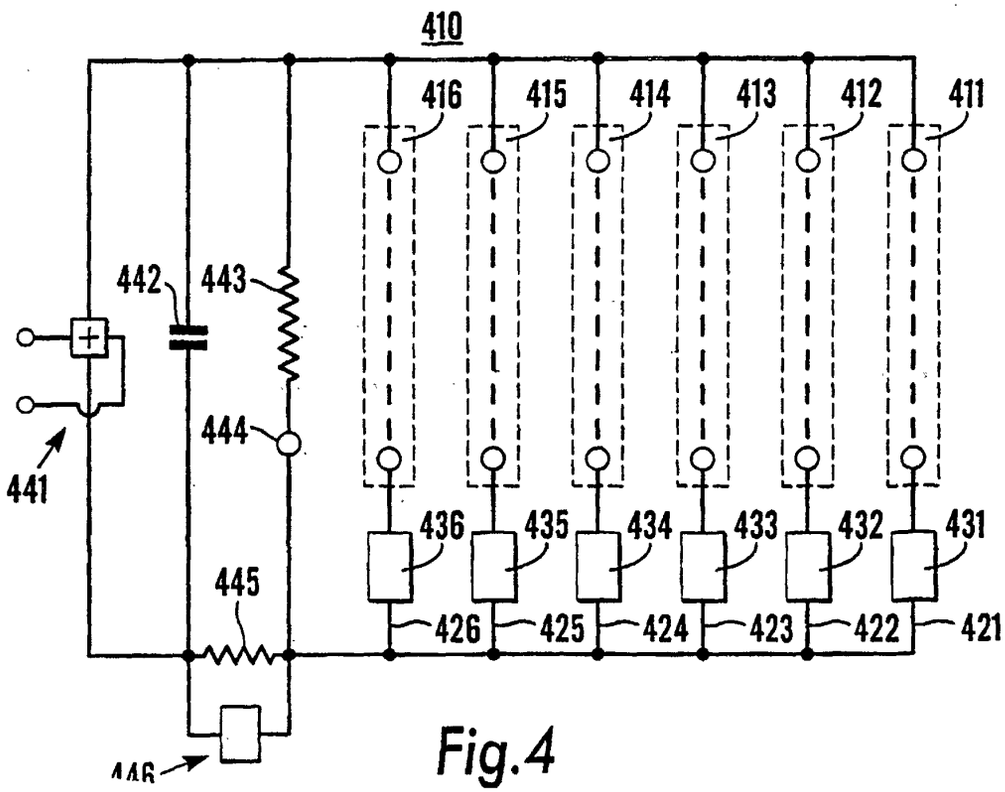
410
416
415
414
413
412
411
442
443
444
441
436
435
434
433
432
431
445
426
425
424
423
422
421
446

Fig.4

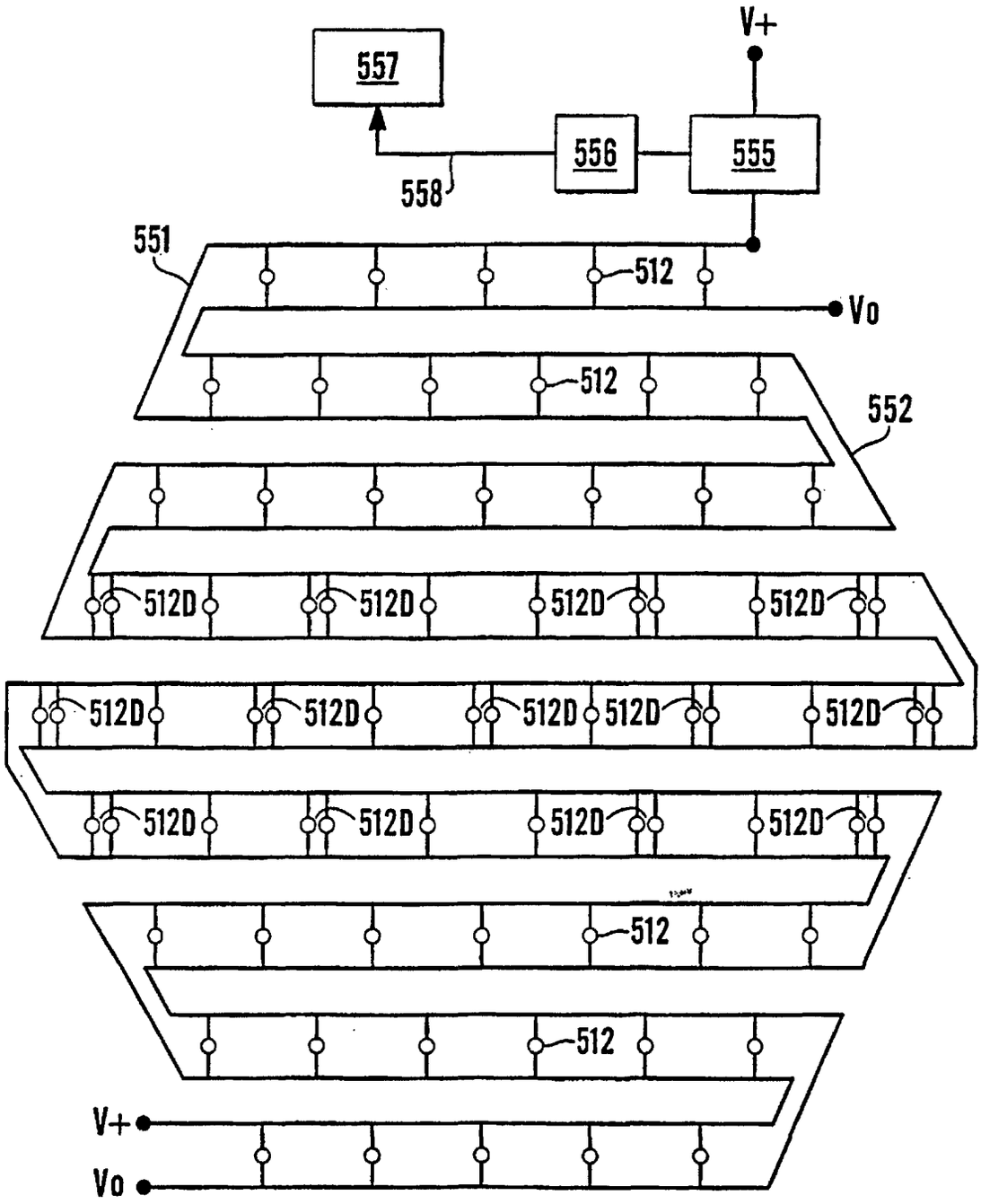
V+
557
556
555
558
551
512
Vo
512
552
512D
512D
512D
512D
512D
512D
512D
512D
512D
512D
512D
512D
512
512
V+
Vo

Fig.5

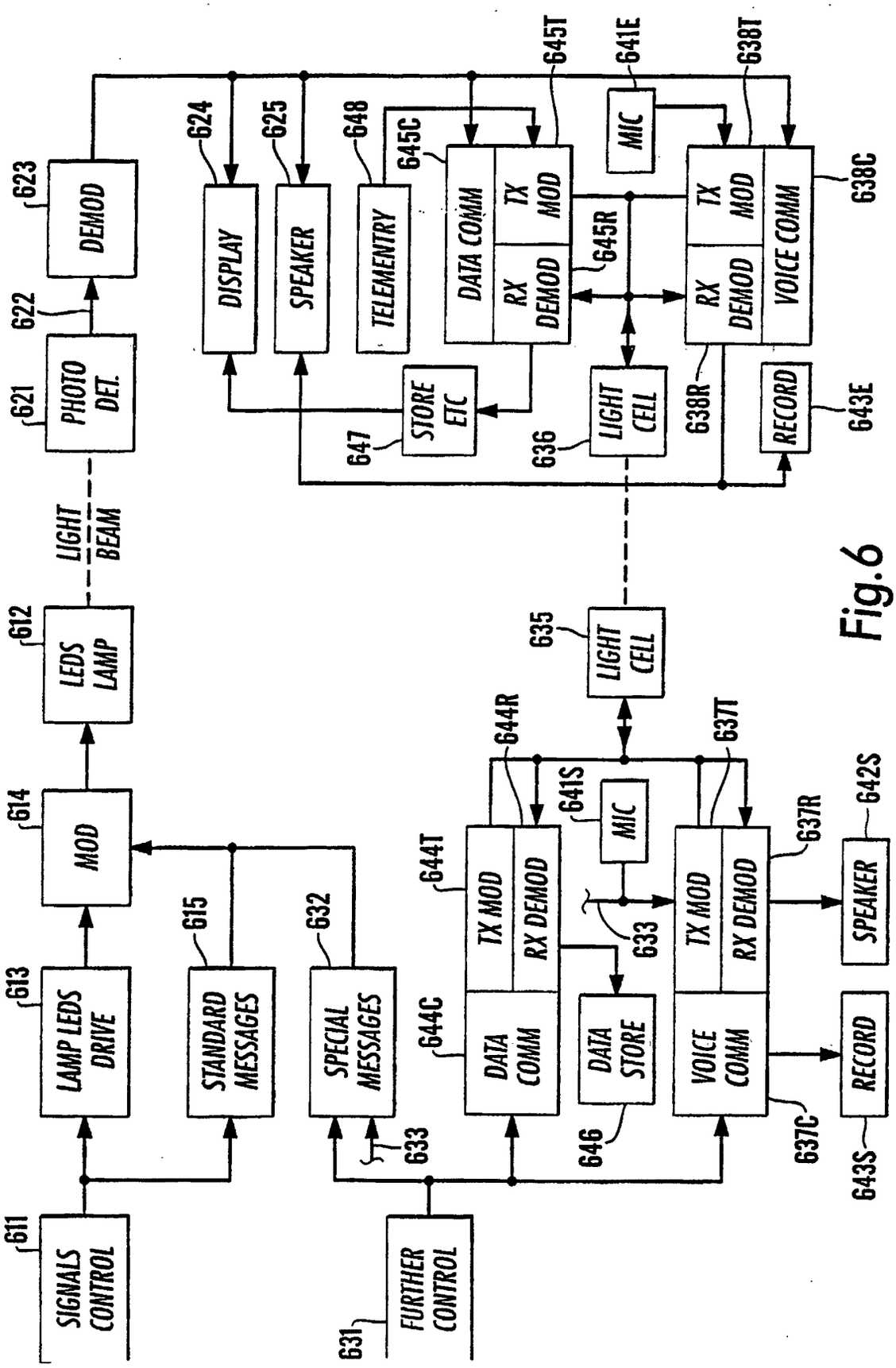
611
SIGNALS CONTROL
613
LAMP LEDS DRIVE
614
MOD
612
LEDS LAMP
LIGHT BEAM
621
PHOTO DET.
622
623
DEMOD
615
STANDARD MESSAGES
632
SPECIAL MESSAGES
633
631
FURTHER CONTROL
624
DISPLAY
625
SPEAKER
648
TELEMENTRY
645C
DATA COMM
TX MOD
RX DEMOD
645T
645R
647
STORE ETC
636
LIGHT CELL
641E
MIC
638T
TX MOD
RX DEMOD
VOICE COMM
638C
638R
RECORD
643E
635
LIGHT CELL
644R
644T
TX MOD
RX DEMOD
DATA COMM
644C
641S
MIC
633
DATA STORE
646
637T
TX MOD
RX DEMOD
VOICE COMM
637R
637C
SPEAKER
642S
RECORD
643S

Fig.6