(19) Europäisches Patentamt
European Patent Office
Office européen des brevets

(11) EP 1 018 585 A1

(12) **EUROPEAN PATENT APPLICATION**

(43) Date of publication:
12.07.2000 Bulletin 2000/28

(51) Int Cl.[7]: **E04F 21/06**, B05C 17/10

(21) Application number: **00200024.8**

(22) Date of filing: **05.01.2000**

(84) Designated Contracting States:
AT BE CH CY DE DK ES FI FR GB GR IE IT LI LU MC NL PT SE
Designated Extension States:
AL LT LV MK RO SI

(30) Priority: **06.01.1999 EP 99200016**

(71) Applicant: **Akzo Nobel N.V.**
6824 BM Arnhem (NL)

(72) Inventors:
- **Hilgenbrink, Bernhard Karl**
48565 Steinfurt (DE)
- **Hjornet, Kurt**
3230 Graested (DK)

(74) Representative: **Schalkwijk, Pieter Cornelis et al**
Akzo Nobel N.V.,
Intellectual Property Department (Dept. AIP),
P.O. Box 9300
6800 SB Arnhem (NL)

(54) **Trowel**

(57) Trowel (1) for the application of a curable, e.g. waterproof, layer to a surface, the trowel (1) having a main body (2) with at least one working edge (4) comprising alternating teeth (5) and notches (6), which trowel (1) further comprises spacer means (7) standing proud of the teeth (5). At least one of the spacer means (7) is positioned in or next to a notch (6). The notches (6) in which the spacer means (7) are positioned are somewhat larger than the other notches (6) . The spacer means (7) are substantially plate-shaped and positioned at substantially right angles to the working edge (4).

The projecting outer ends of the spacer means (7) are chamfered or semi-circular, having an axis of rotation which coincides with the line defined by the outer ends of the teeth (5).

FIG. 1

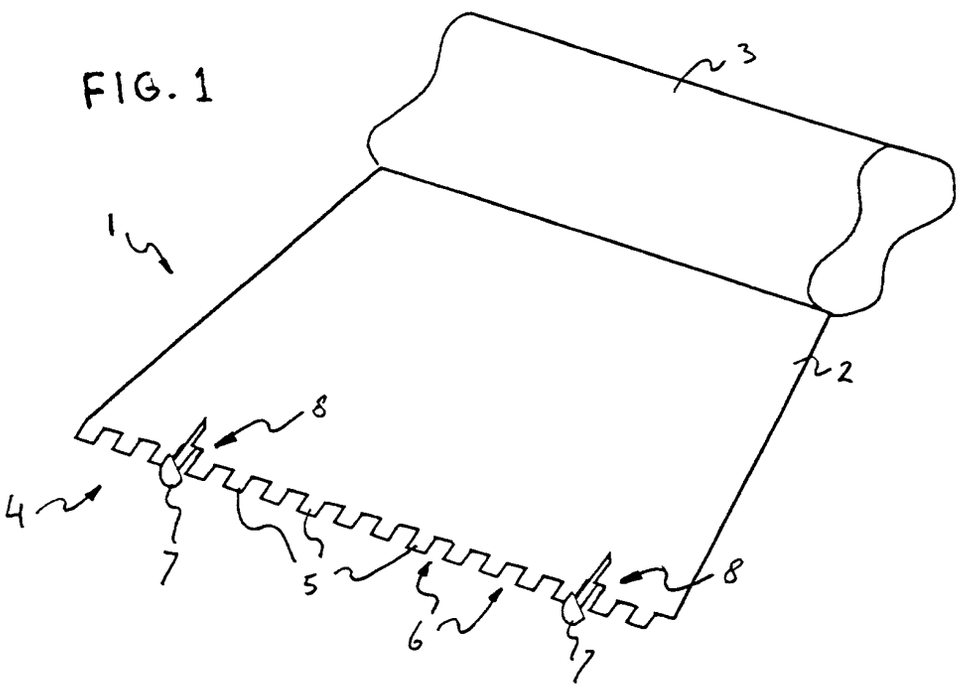

EP 1 018 585 A1

Description

[0001] The present invention relates to a trowel for the application of a curable layer to a surface, the trowel having a main body with at least one working edge comprising alternating teeth and notches, which trowel further comprises spacer means standing proud of the teeth.

[0002] Such a trowel is known from Australian patent application AU-A 67677/90. Such trowels are used to apply a viscous, adhesive intermediate layer of mortar, glue, or the like to a surface, e.g., a floor. During the application of the intermediate layer, the spacer means keep the teeth of the trowel at a distance from the surface to be treated. As a result, the applied intermediate adhesive layer integrally comprises a solid base layer and a profiled upper layer, which are both applied in a single one-step operation. The solid base layer serves primarily to level the surface to be treated and to fill cracks and uneven spots. The more uneven the treated surface is, the thicker the base layer must be. The profiled upper layer shows a pattern of troughs and ledges or peaks, reflecting the profile of the working edge. Next, tiles, panels or the like are applied to the adhesive intermediate layer, causing the material of the ledges to flow into the troughs. Thus, the profiling of the upper layer ensures that the amount of adhesive material forced out from under the edges of the tiles or panels, is kept to a minimum.

[0003] The spacer means in the trowel according to AU-A 67677/90 are attached at the outer ends of the working edge, next to the outermost teeth. When a user applies a layer of, for example, mortar or glue, the spacer means leave traces where they contact the treated surface. Normally, the user will apply the layer step by step to subsequent adjacent partial areas. When covering a partial area, the user will slightly overlap the adjacent area treated earlier. Consequently, the spacer means will more or less pass the same trace twice, so that locally there will be a deficit of material in the base layer. Therefore, this known trowel is not suitable for applying e.g. a leaktight waterproof layer or a vapour barrier. Since the spacer means are attached to the outermost teeth, the trace of the spacer is adjacent to a trough in the profiled upper layer. Consequently, there is only little material to compensate the trace of the spacer. This leads to a non-uniform distribution of the glue or mortar and a discontinuous base layer.

[0004] The object of the invention is to provide a trowel for integrally applying a layer comprising a solid base layer and a profiled upper layer, showing an optimized distribution of the material of the applied layer.

[0005] This object is achieved with a trowel having a toothed working edge comprising spacer means and alternating teeth and notches, the spacer means being positioned in or next to a notch. This has the advantage that in the applied layer, the trace of the spacer means is adjacent to a ledge left by a notch, so there is sufficient material to compensate the spacer trace. Due to the thus improved distribution of the layer material, the trowel according to the present invention makes it possible to apply in one step e.g. a leaktight layer of waterproof material and/or a vapour barrier layer.

[0006] The spacer means may be positioned in or next to an end gap at the outer end of the working edge, having only one neighboring tooth. However, it is preferred that the spacer means is positioned in a gap between two adjacent teeth, at a distance from the outer ends of the working edge. This has the advantage that the spacer means normally will not pass the same trace twice, so that a further improved distribution of the applied material can be achieved.

[0007] The notches or gaps in which the spacer means are positioned are preferably somewhat larger than the other notches. The enlarged gaps will leave extra material to compensate for the material displaced by the spacer means. The enlargement preferably consists of a greater depth of the gaps concerned, so that when a tile or panel is placed on the adhesive layer; first the trace of the spacer means will be compensated before the ledges are forced to flow into the troughs. Alternatively, the width of the gaps may be enlarged while the depth is the same as for the other gaps. In another alternative embodiment, the depth and the width of the gaps are both enlarged. The enlargement of the gaps concerned preferably corresponds to the thickness of the spacer means.

[0008] The spacer means may be attached to one of the adjacent teeth. In that case, the spacer means can be attached more firmly and easily to the trowel. However, it is preferred that the spacer means are placed at a distance from two adjacent teeth, preferably in the middle of the gap between two adjacent teeth. This has the advantage that the incision made by the spacer means is surrounded by more material that can fill up the incision. The spacer means may for example be attached by clamping the working edge in a tightly fitting longitudinal slot in the spacer, or by gluing, welding or any other fastening means. The spacer means may for instance be replaceable by other spacer means, for example if another layer thickness is desired.

[0009] Preferably, the spacer means are substantially plate shaped and positioned at substantially right angles to the working edge. As a result of this feature, the trace of the spacer means in the adhesive layer will be as thin as possible.

[0010] It is important to have a constant layer thickness, in particular if the layer to be applied must serve as a waterproof layer or as a vapour barrier. Normally, a trowel is tilted by the user during application of a layer. The angle of tilt generally varies during the application between about 50 and about 80 degrees. Near corners or edges, the angle of tilt is also different. This leads to a variation of the layer thickness. Therefore, it is preferred that the projecting outer ends of the spacer means are rounded or chamfered, preferably in such a

way that the trowel can be tilted around an axis of rotation which substantially coincides with the line defined by the outer ends of the teeth. It is particularly preferred that the outer ends are semi-circular. This has the advantage that the thickness of the applied layer does not vary when the trowel is tilted through a larger or smaller angle by the user, so a constant layer thickness is obtained.

[0011] Preferably, only two spacer means are present, but if so desired more spacer means may be used. Optionally, the spacer means may be adjustable in length.

[0012] The distance between the outer ends of the spacer means and the outer ends of the teeth is determined by the desired thickness of the base layer, and thus is dependent on the surface that needs to be treated as well as on the used adhesive material. Generally, it is convenient if the distance between the outer ends of the spacer means and the outer ends of the teeth is between 0,5 and 6 millimetres. However, smaller or larger distances may also be used, if so desired.

[0013] The length of the working edge and the number, size, shape, and spacing of the teeth may be varied, as required. The gaps are normally rectangular, but may alternatively have another shape, e.g. a V-shape, the teeth reflecting a corresponding shape. The teeth and/or the gaps may have rounded or chamfered corners.

[0014] The trowel may have more than one working edge. If the trowel has more than one working edge, the different working edges may have a different number of teeth and/or comprise differently sized, shaped and/or spaced teeth, which may be dependent on the type of surface that is treated, the type of layer material or the type of covering that is applied.

[0015] The main body of the trowel may be plate-shaped, but it may also have any other shape, if so desired, as long as there is at least one working edge. Preferably, the main body of the trowel comprises a handle.

[0016] Preferably, the working edge is made of a metal. Stainless steel is preferred. Advantageously, the spacer means may be made of a wear resistant material, for example tungsten steel.

[0017] The invention is further described and illustrated by the following figures. In the drawings:

Figure 1: shows in perspective view a trowel according to the invention;

Figure 2: shows in detail in a perspective view a spacer means of the trowel according to figure 1;

Figure 3: shows in cross section a layer made by the trowel of figure 1;

Figure 4: shows in plan view a detail of an alternative embodiment of a trowel according to the invention;

Figure 5: shows a detail of figure 4 in perspective view;

Figure 6: shows in cross section a layer made by the trowel of figure 4;

Figure 7A - B: show side views of two alternative embodiments of spacer means of trowels according to the invention;

Figure 8A - C: show front views of three alternative working edges of trowels according to the invention.

[0018] Figure 1 shows a tool or trowel 1 according to the invention. The trowel 1 can be used for the application of a curable adhesive intermediate layer to a surface, such as a floor, wall or ceiling. The intermediate layer may for example be a waterproof layer and/or a vapour barrier. After application of the layer, tiles, panels or another floor or wall covering may be applied and bonded to it. The trowel 1 comprises a main body 2 with a handle 3 and a straight working edge 4 comprising teeth 5, which are attached to the straight working edge 4 with gaps 6 between them. The trowel 1 further comprises spacers 7 projecting in the same direction as the teeth 5 and standing proud of the teeth 5. The spacers 7 are positioned in slightly enlarged gaps 8 between two adjacent teeth 5. In this embodiment of figure 1, the gaps 8 are enlarged by a greater depth.

[0019] The plate-shaped spacers 7 may have a thickness of, for example, 1 millimetre or less. The spacers 7 are positioned at substantially right angles to the working edge 4.

[0020] Figure 2 shows in detail a part of the working edge 4 and two of its teeth 5. Between the teeth 5 there is a gap 8, which is slightly deeper than the gaps at the respective other sides of the teeth 5. In the gap 8, a spacer 7 is positioned. The plate-shaped spacer 7 is positioned perpendicular to the working edge 4. The spacer 7 has a T-shaped body turned upside-down with a longitudinal part 9 extending from the working edge 4 to beyond the line defined by the outer ends of the teeth 5. At the outer end of the longitudinal part 9, the spacer 7 comprises a broadened, semi-circular end part 10. In the middle of the longitudinal part 9, a slot 11 in lengthwise direction of the spacer 7 is present. In the slot 11, the working edge 4 is clamped by a tight fitting. The length of the slot 11 is such that, after attachment of the spacer 7, the rotational center point of the semi circular part 10 is in line with the line defined by the outer ends of the teeth 5.

[0021] Figure 3 shows a surface 12, for example a floor. A curable layer 13, for instance a waterproof layer or vapour barrier, is applied to the floor 12. The layer 13 reflects the pattern of the toothed working edge 4 of the trowel 1. Thus, the pattern of the curable layer 13 shows troughs 14 and longitudinal ledges 15. The longitudinal ledges 16, which are formed by the enlarged gaps 8, are higher than the other ledges 15. The higher ledges 16 are cut in two in the longitudinal direction by a trace 17 left behind by the spacer 7. The trace 17 extends from the top of the enlarged ledge 16 to the treated sur-

face 12.

[0022] After application of the intermediate layer 13, tiles, panels or the like are applied to the intermediate layer, causing the material of the ledges 14, 15 to flow into the troughs 13.

[0023] Figures 4 and 5 show a detail of an alternative embodiment of a trowel according to the invention. The spacers 7 are attached directly to an adjacent tooth 5. Such a trowel would produce a layer as shown in figure 6. The trace 17 of the spacer 7 is located directly adjacent to an enlarged longitudinal ledge 16.

[0024] Figures 7A and B show in side views two different types of spacers that may be used for a trowel according to the invention. In figure 7A, the spacer 18 also has a longitudinal part 19 and a broadened outer end part 20. The broadened part 20 is rectangular, the downwardly directed comers 21 being chamfered.

[0025] The spacer 22 of figure 7B is much the same as the spacer 7 of the trowel of figure 1. However, the semi-circular outer end 23 is not broader than the longitudinal part 24.

[0026] The working edge 4 of the trowel 1 in figure 1 shows rectangular notches 6 and teeth 5. However, as shown in figures 8A, B, and C, respectively, alternative patterns are possible as well. The working edge 25 in figure 8A shows triangular teeth 26 and notches 27. A spacer 28 is placed in a slightly deeper triangular notch 29. Figure 8B shows a working edge 30 with rectangular teeth 31 and notches 32 having rounded upper sides 33. Figure 8C shows a working edge 34 with rectangular teeth 35 and notches 36, the teeth 35 having rounded outer ends 37.

Claims

1. Trowel (1) for the application of a layer to a surface, the trowel having a main body (2) with at least one working edge (4, 25, 30, 34) comprising alternating teeth (5, 26, 31, 35) and notches (6, 8; 27, 29; 32; 36), which trowel further comprises spacer means (7, 18, 22) standing proud of the teeth, characterized in that at least one of the spacer means is positioned in or next to a notch.

2. Trowel according to claim 1, characterized in that at least one of the spacer means (7, 18, 22) is positioned in a notch, or gap, (8, 29, 32, 36) between two adjacent teeth (5, 26, 31, 35).

3. Trowel according to claim 1 or 2, characterized in that the notches (8, 29, 32, 36) in which the spacer means are positioned are somewhat larger than the other notches (6, 27, 32, 36).

4. Trowel according to claim 1, 2 or 3, characterized in that the spacer means (7, 18, 22) are placed at a distance from the adjacent teeth (5, 26, 31, 35).

5. Trowel according to any one of the preceding claims, characterized in that the spacer means (7, 18, 22) are substantially plate-shaped and positioned at substantially right angles to the working edge (4, 25, 30, 34).

6. Trowel according to any one of the preceding claims, characterized in that the projecting outer ends (10, 23) of the spacer means (7, 22) are rounded.

7. Trowel according to claim 6, characterized in that the projecting outer ends (10, 23) of the spacer means (7, 22) are semi-circular, having an axis of rotation which substantially coincides with the line defined by the outer ends of the teeth.

8. Trowel according to any one of the preceding claims, characterized in that the projecting outer ends (20) of the spacer means are chamfered.

FIG. 1

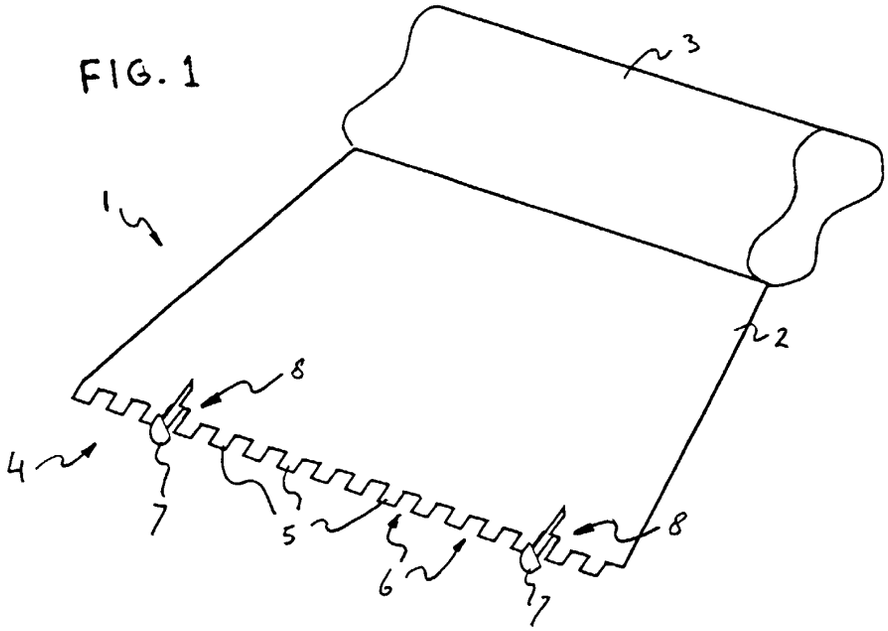

FIG. 2

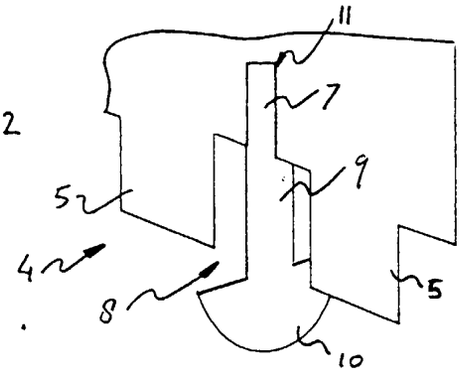

FIG. 3

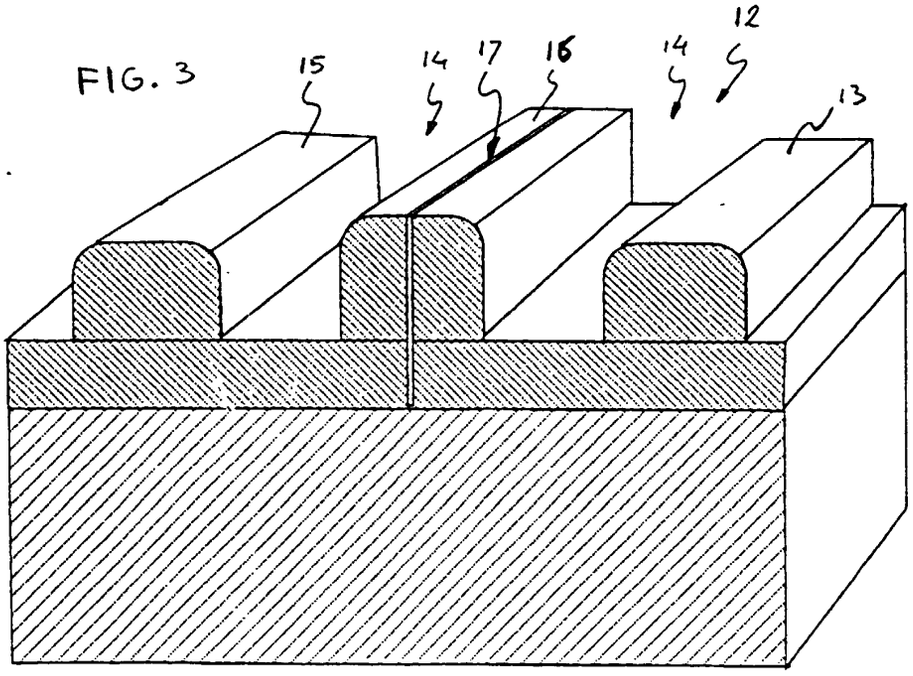

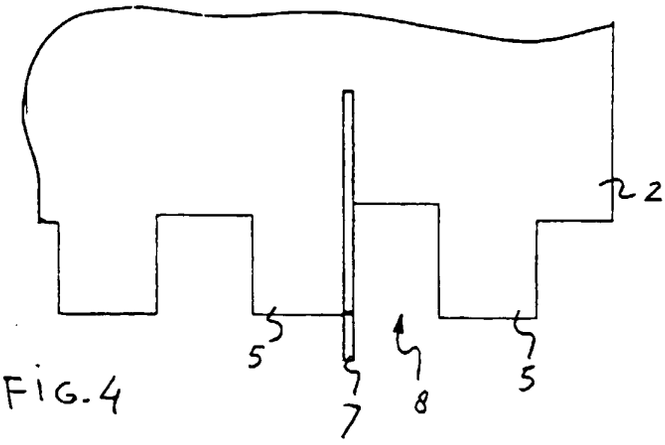

FIG.4

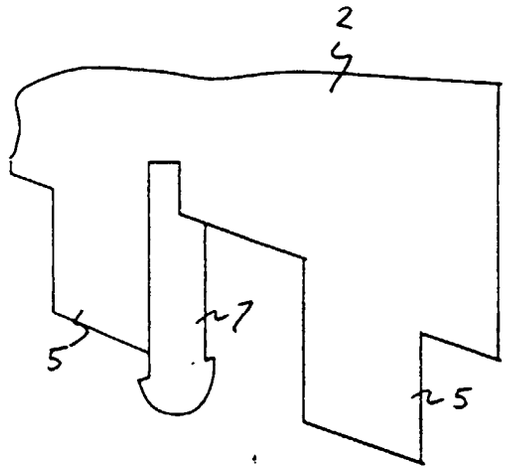

FIG.5

FIG.6

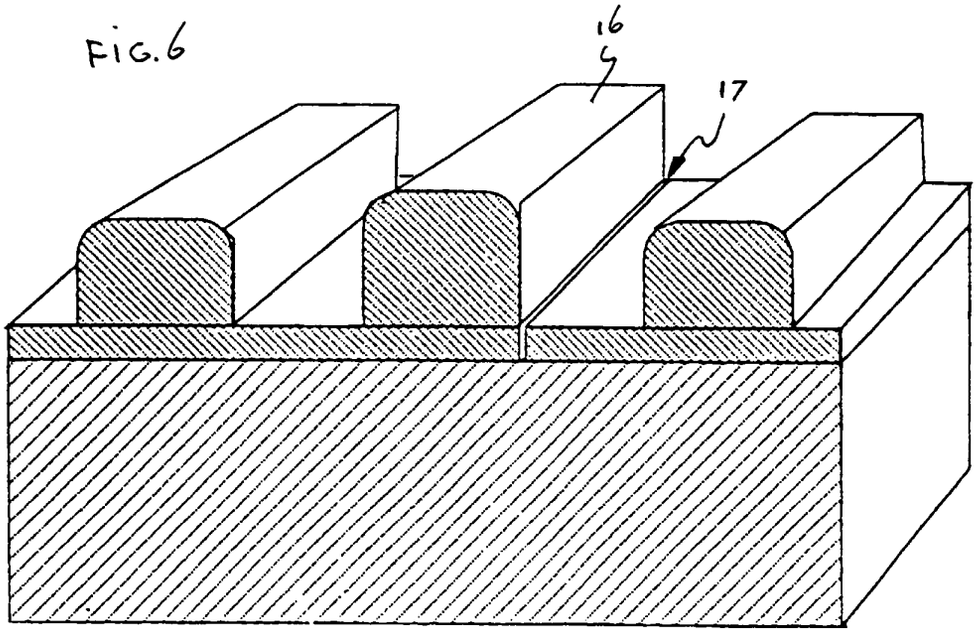

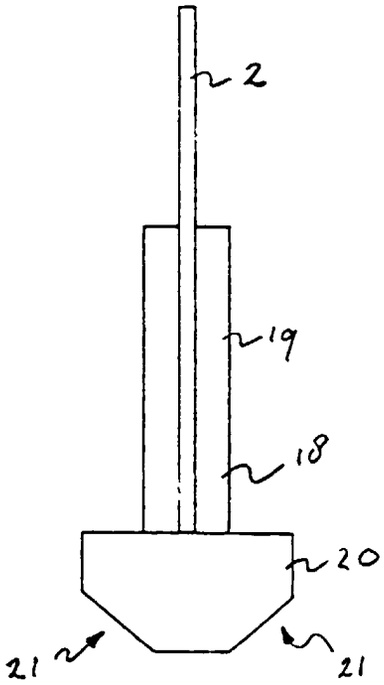

FIG. 7A

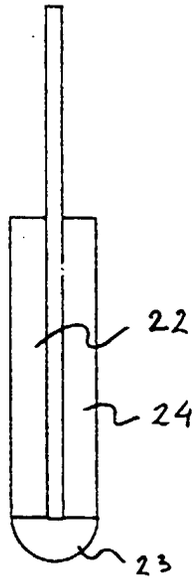

FIG. 7B

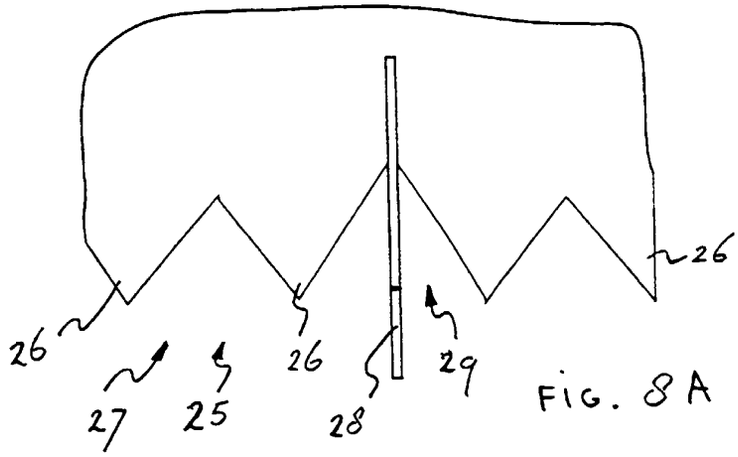

FIG. 8A

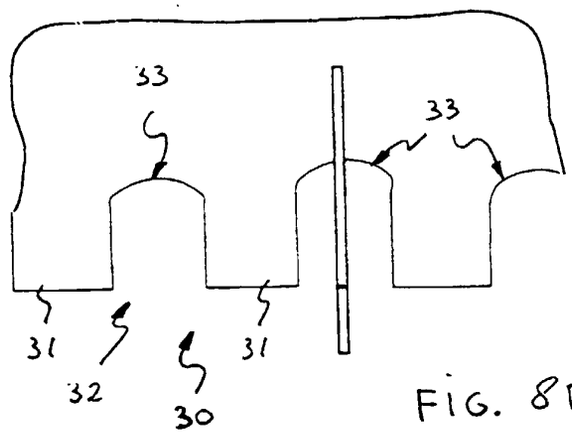

FIG. 8B.

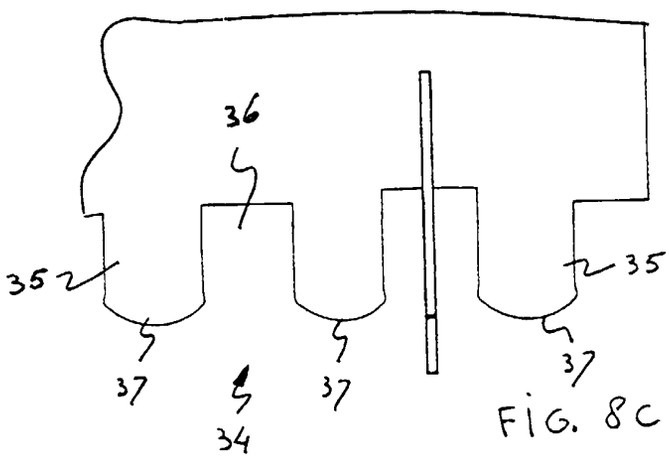

FIG. 8C

European Patent Office

EUROPEAN SEARCH REPORT

Application Number
EP 00 20 0024

DOCUMENTS CONSIDERED TO BE RELEVANT

Category	Citation of document with indication, where appropriate, of relevant passages	Relevant to claim	CLASSIFICATION OF THE APPLICATION (Int.Cl.7)
X	FR 2 453 962 A (OMERIN MICHEL) 7 November 1980 (1980-11-07) * page 3, line 14 - page 4, line 35; figures 1-6 * ---	1,2,4,5	E04F21/06 B05C17/10
X	US 2 167 996 A (PRITZ) 1 August 1939 (1939-08-01) * page 1, right-hand column, line 25 - page 2, right-hand column, line 31; figures 1-8 * ---	1,2,5	
X	EP 0 456 430 A (ROSE DERRICK DUDLEY) 13 November 1991 (1991-11-13) * column 1, line 57 - column 3, line 3; figures 1,4 *	1	
A	---	5	
A	DE 674 083 C (REINERS) 4 April 1939 (1939-04-04) * the whole document * -----	1,2,8	

TECHNICAL FIELDS SEARCHED (Int.Cl.7)
E04F B05C

The present search report has been drawn up for all claims

Place of search	Date of completion of the search	Examiner
THE HAGUE	10 April 2000	Ayiter, J

CATEGORY OF CITED DOCUMENTS

X : particularly relevant if taken alone
Y : particularly relevant if combined with another document of the same category
A : technological background
O : non-written disclosure
P : intermediate document

T : theory or principle underlying the invention
E : earlier patent document, but published on, or after the filing date
D : document cited in the application
L : document cited for other reasons
.....
& : member of the same patent family, corresponding document

EPO FORM 1503 03.82 (P04C01)

ANNEX TO THE EUROPEAN SEARCH REPORT ON EUROPEAN PATENT APPLICATION NO. EP 00 20 0024

This annex lists the patent family members relating to the patent documents cited in the above-mentioned European search report.
The members are as contained in the European Patent Office EDP file on
The European Patent Office is in no way liable for these particulars which are merely given for the purpose of information.

10-04-2000

Patent document cited in search report	Publication date	Patent family member(s)	Publication date
FR 2453962 A	07-11-1980	NONE	
US 2167996 A	01-08-1939	NONE	
EP 0456430 A	13-11-1991	AT 117400 T	15-02-1995
		DE 69106771 D	02-03-1995
		DE 69106771 T	07-09-1995
		ES 2071215 T	16-06-1995
		GB 2243642 A,B	06-11-1991
		GR 3015849 T	31-07-1995
		US 5231729 A	03-08-1993
DE 674083 C		NONE	

EPO FORM P0459

For more details about this annex : see Official Journal of the European Patent Office, No. 12/82