(19) Europäisches Patentamt
European Patent Office
Office européen des brevets

(11) EP 1 125 605 A1

(12) EUROPEAN PATENT APPLICATION
published in accordance with Art. 158(3) EPC

(43) Date of publication:
22.08.2001 Bulletin 2001/34

(21) Application number: **00954978.3**

(22) Date of filing: **24.08.2000**

(51) Int Cl.[7]: **A63F 7/02**

(86) International application number:
PCT/JP00/05693

(87) International publication number:
WO 01/15788 (08.03.2001 Gazette 2001/10)

(84) Designated Contracting States:
AT CH DE FR GB LI

(30) Priority: **31.08.1999 JP 24427999**
31.08.1999 JP 24428099

(71) Applicant: **Aruze Corporation**
Tokyo 135-0063 (JP)

(72) Inventors:
- **INAGAKI, Hirotaka, Aruze Corporation**
  Koto-ku, Tokyo 135-0063 (JP)
- **HAYASAKA, Eiichi, Aruze Corporation**
  Koto-ku, Tokyo 135-0063 (JP)
- **SHIRAI, Hiroaki, Aruze Corporation**
  Koto-ku, Tokyo 135-0063 (JP)
- **KOIWA, Tatsuaki, Aruze Corporation**
  Koto-ku, Tokyo 135-0063 (JP)
- **WAKABAYASHI, Eiichi, Aruze Corporation**
  Koto-ku, Tokyo 135-0063 (JP)
- **EBIHARA, Nobuo, Aruze Corporation**
  Koto-ku, Tokyo 135-0063 (JP)

(74) Representative: **Whitten, George Alan et al**
R.G.C. Jenkins & Co.,
26 Caxton Street
London SW1H 0RJ (GB)

(54) PLAYING MACHINE

(57) A game machine comprises a display means 3a for displaying on predetermined zones 50L, 50C and 50R a special symbol indicating shifting to a special game state if the variation display stops at a specific state and game-related designs including a production design indicating the probability of shifting to the special game state and comprises a control means for determining the stop result of the variation display and controlling the display of the display means 3a according to the determination. The control means controls the display means 3a to perform production display of producing a scenario from its beginning to the end during the period from the start to the end of the variation display in the predetermined zones 50L, 50C and 50R. Furthermore, the display means performs a suggestion display of relationship between the production design and the probability of shifting to the special game state.

FIG. 2

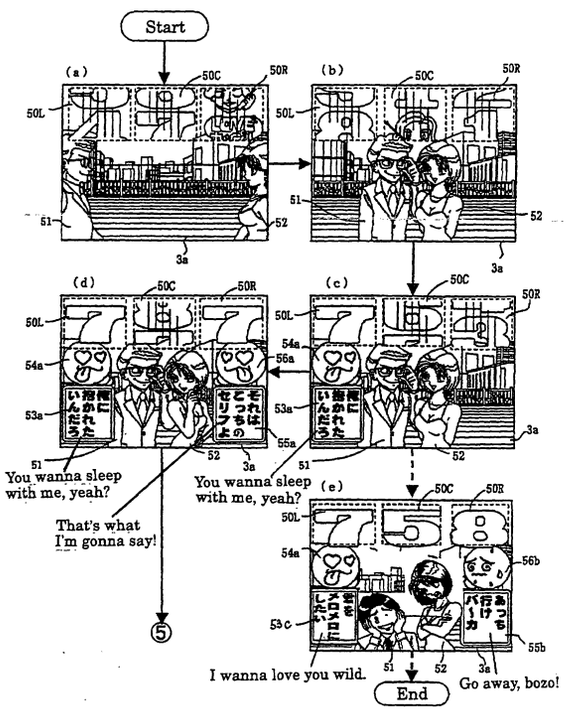

EP 1 125 605 A1

Description

Technical Field

[0001] This invention relates to game machines such as a pachinko game machine (pinball-like game machine of Japanese origin) comprising a display means for displaying game-related designs and control means such as a microcomputer for controlling the display.

Background Art

[0002] A type of pachinko (spring-driven steel ball) game machine has been on the market, in which a display means is provided to show variation display of symbols when specific conditions are met (hereinafter called "special symbols"), and advantage is given to the player if the variation display stops at a specific combination of the special symbols. In recent years, many electric display devices are used such as liquid crystal display devices capable of showing various production (dramatic) displays.

[0003] Concerning such game machines, the greatest concern of the player is whether the variation display stops at a special game state, the so-called "big hit," a combination of special symbols, favorable for the player. The combination of the special symbols is for example a set of three identical special symbols like "7-7-7." Therefore, the player is to carefully trace visually the special symbols shown as variation display.

[0004] However, since the variation display of the special symbols is made at a high speed, actually the player is like visually tracing invisible designs. Also, until the result of stop of special symbols appears, the process is monotonous and not a fun at all, and the player is bored. As the player visually traces the special symbols moving at high speeds, the player may suffer eyestrain.

[0005] In recent year, arrangements for enhancing the fun of playing have been put on the market. In one arrangement, a display (pre-big-hit (Reach) production or Reach action) is made separately from the ordinary display of the varying special symbols when a condition of a Reach, where a big hit would happen with one more stop of the special symbol, is reached, so that the player can feel that the time of a big hit is near. In another arrangement, the Reach display is made with a story. However, the fact that the player visually traces the special symbols moving at high speeds until the Reach state is reached remains unchanged.

[0006] In still another arrangement, production display is performed by causing character designs to appear before reaching the Reach state.

[0007] In such an arrangement for example, in addition to the display of special symbols for determining the occurrence of a special game state using a special variation display device, an animated image of a character playing golf is displayed, and the displayed result of the animated image is made to correspond to the displayed result of the special symbols. For example, during the variation display of the special symbols, an animated image is displayed in which a character performs a series of tee shot actions of golf. If the ball enters the hole, a big hit symbol is displayed and if not, a miss symbol is displayed. In this animated image, the common story of golf is used for different games, and the game to be displayed is switched according to the number of starting up the special symbols.

[0008] Still another arrangement of conventional technique is known: While a game is going on with variation display of special symbols (variation display game), a preliminary variation display game is played as interlocked with the variation display game. Concerning the preliminary variation display game, an ornamental display is made in which a stop symbol is extracted when the character design drives out a special symbol for variation display.

[0009] In still another arrangement of conventional technique, animated image information constituted to synchronize with the variation display of the special symbol display device is displayed on an image display device. The animated image shows for example the story from the step of an angler dropping a fishing line to the step of landing a fish, corresponding to the states of big hit, Reach, and miss. Specifically, specific designs such as an octopus, a shark, etc. corresponding to the special symbols defined as the stop symbols of the special symbol display device are made to appear while the variation display is performed with the special symbol display device.

[0010] In still another arrangement, it is devised to enhance the player's feeling of expectations: Magnitude of Reach evolution probability indicating whether a Reach demonstration appears or big hit probability is indicated with characters and their combinations caused to appear during the variation display, and the big hit probability is indicated with the Reach demonstration displayed.

[0011] With the conventional technique described above, however, the story shown with the animated image is made different only concerning the image corresponding to the finally stopped result of the special symbols, and the story during the variation display remains the same. Therefore, the evolution of the story can be easily predicted and the player becomes bored after viewing for a long time.

[0012] From another viewpoint, the displayed contents of the animated image (showing a golf ball missing a hole) are the same whether a miss results from a Reach state or not from a Reach state. Therefore, if the player watches the animated image only, the game comes to an end without the player learning whether a Reach state is reached or not. That is, after all, in order for the player to learn the game state, the player cannot turn the eyes from the monotonously varying display of the special symbols.

[0013] Even if plural kinds of animated images are set

on the basis of the same story, since a monotonous pattern is repeated, the player gets bored.

[0014] According to the another arrangement described above of the conventional technique, since the preliminary variable display game using the character designs is interlocked with the variable display game, after all, the player cannot turn the eyes from the monotonous variation display.

[0015] According to the still another arrangement described above of the conventional technique, since the animated image information is expressed with close correlation with special symbols, namely the determined, stopped designs are expressed with character designs such as octopus or shark, in order to learn the state of the game, it is necessary every time the varying display stops to check the stopped result after watching the display of the animated image information. Besides, no change can be seen in the character design (the angler) before a Reach state is reached, which is monotonous. Moreover, in case a Reach state is not reached because the special symbols on right and left hand sides are not in agreement, the story expressed with the animated image information does not come to an end, and so the player cannot grasp the state of the game by merely watching the animated image information. That is, even if production display is shown, nothing changes in that the player must watch the special symbols that are variation-displayed.

[0016] Furthermore, with a game machine performing the varying display continuously for a long time such as a game machine having the function of changing the winning rate in a big hit lottery (variable probability machine), the above-mentioned problems of "eyestrain" and "getting bored with monotonous variation display" become worse. On top of that, since most of the stopped results of the variation display are misses and most of which do not even come to a Reach state, watching the variation display ends up in wasting much effort.

[0017] Some of the production displays include those indicating information that is favorable for the player such as "Big-hit probability is high." Some of the players enjoy finding out such a production display during the play. For such players, an explanatory display because of the difficulty in understanding the contents of the production display will detract from the fun of the game.

[0018] An object of the invention is to provide a game machine capable of making it possible for a player to reliably learn the game evolution such as a big hit, Reach evolution, and a miss even without watching variation-displayed special symbols, by simply watching production displays.

[0019] Another object of the invention is to provide a game machine capable of making it possible for a player to grasp production contents without depriving the player of the pleasure of finding specific production display of information beneficial to the player.

Disclosure of Invention

[0020] A game machine of a first form of the invention is one comprising a display means for displaying a special symbol indicating shifting to a special game state if a variation display stops at a specific state and also displaying game-related production display, and a control means for determining the stopped result of the variation display and controlling the display of the display means according to the determination, the control means being constituted to control the display means to perform production display of producing a scenario from its beginning to the end during the period from the start to the end of the variation display.

[0021] A second form is characterized in that the end of the scenario indicates whether to shift to a special game state.

[0022] A third form is characterized by being constituted to control the display means so that the production display becomes such that the contents of the scenario progress according to the stop timing of the variation display.

[0023] A fourth form is characterized by being constituted to control the display means so that the production display becomes such that the contents of the scenario progress irrespective of the stop timing of the variation display.

[0024] A fifth form is characterized in that the control means is constituted to change the production display to show the evolution of the contents of the scenario when the game state becomes a Reach state which shifts to a special game state if the variation display stops one more special symbol at a specific stop arrangement.

[0025] A sixth form is characterized in that the evolution of the contents of a scenario is indicated by changes in the background shown as a production display.

[0026] A seventh form is characterized in that the progress pattern of a scenario shown with the production display is different by the type of production designs or combination thereof.

[0027] An eighth form is characterized in that the production display suggests moving on to a special game state according to the type of the production design or to an appended design indicated as appended to the production design.

[0028] A ninth form is characterized in that the display means is constituted with a display zone for the production display greater than a display zone for the variation display of the special symbol.

[0029] A tenth form is characterized by comprising; a display means for displaying designs related to the game, and a control means for controlling the display on the display means, said control means performing production display of producing the process from the beginning to the end of a scenario, and controlling the display means to display that the game moves on to a special game state when the end of the scenario indicated

with the production display becomes as specified.

[0030] An eleventh form is a recording medium having a recorded game program characterized in that a function of displaying the production from the beginning to the end of a scenario during the period from the start to the stop of the variation display is added to a function of permitting a player to play a game by displaying a special symbol indicating shifting to a special game state if the variation display stops at a specific state.

[0031] A twelfth form is characterized by comprising a display means for displaying a special symbol indicating shifting to a special game state if the variation display stops at a specific state and game-related designs including a production design indicating the probability of shifting to the special game state, said display means performing a suggestion display of relationship between the production design and the probability of shifting to the special game state.

[0032] A thirteenth form is characterized in that the suggestion display indicates which of the production designs has a high probability of shifting to the special game state.

[0033] A fourteenth form is characterized in that the suggestion display shows designs identical to the production designs or ones relating thereto.

[0034] A fifteenth form is characterized in that the suggestion display is performed with an animated image.

[0035] A sixteenth form is characterized in that the suggestion display is shown when the game is not played or when the variation display of the special symbol is not shown.

[0036] A seventeenth form is a recording medium having a recorded game program with a function of permitting a player to play a game while displaying a special symbol indicating shifting to a special game state if the variation display stops 'at a specific state and displaying game-related designs including a production design indicating the probability of shifting to a special game state, with said function added with a function of performing a suggestion display of relationship between the production design and the probability.

[0037] According to the first form of the invention, the control means controls the display means to display the production of a scenario from its beginning to end during the period from the start to the stop of the variation display. Therefore, a production display is possible with which the player can learn the game evolution such as a big hit, a Reach evolution, a miss after a Reach state, and a miss, without watching the special symbols in variation display. With such a production display, since the player need not concentrate attention to the variation display even when playing a game with variation display for a long period of time, games that do not cause eyestrain or boredom can be provided. Even if most of the games result in misses, the player can play the games with pleasure of watching the evolution of scenario of the production display.

[0038] According to the second form of the invention, since the end of the scenario of the production display indicates whether the game shifts to a special game state, the player can easily learn by simply watching the production display the final result of the game displayed in variation.

[0039] According to the third form of the invention, since the contents of the scenario of the production display proceed according to the timing of stops of the variation display, the player can grasp the timing of each stop of the variation display by simply watching the production display.

[0040] According to the fourth form of the invention, since the contents of the scenario of the production display proceed irrespective of the timing of stops of the variation display, games can be evolved with originality irrespective of the variation display.

[0041] According to the fifth form of the invention, since the control means changes the production display when a Reach state is reached so that the contents of the scenario evolve, the player can easily learn the occurrence of the Reach state by simply watching the production display.

[0042] According to the sixth form of the invention, since the evolution of the contents of the scenario is indicated with the change in the background indicated as production display, the player is likely to notice the evolution of the scenario and can easily learn the change in the game indicated with the variation display by simply watching the production display.

[0043] According to the seventh form of the invention, since the progress pattern of the scenario indicated with the production display varies according to the types of production designs appearing in the production display or their combination, the player can predict to some extent the ensuing game evolution by simply watching the types of the displayed production designs (for example character designs) or their combination from the beginning. Additional fun of anticipating the appearance of production designs leading to scenario evolution favorable for the player is also provided.

[0044] According to the eighth form of the invention, the production display suggests the shift to a special game state using the types of the production designs appearing in the production display or using appended designs indicated as attached to the production designs. Therefore, situations or final results of the game indicated with the variation display can be expressed in various ways using the production designs or appended designs.

[0045] According to the ninth form of the invention, the display means has a display zone for the production display wider than a display zone for the variation display of the special symbol. Therefore, the player can watch only the production display and enjoy its evolution without being distracted with the variation display.

[0046] According to the tenth form of the invention, only the production display of producing the process from the beginning to the end of a scenario is shown, a

game machine nonexistent in the past is provided that makes it possible to learn the occurrence of a big hit, a miss, or a Reach state without performing conventional variation display.

[0047] The eleventh form of the invention is a recording medium having a recorded game program characterized in that a function of displaying the production of a scenario from the beginning to the end during the period from the start to the stop of the variation display is added to a function of permitting a player to play a game with a special symbol displayed to indicate shifting to a special game state if the variation display stops at a specific state. Therefore, the recording medium with the game program can be used in home game machines. Also, by installing the program from the recording medium to general purpose computers, such computers may be used as game machines.

[0048] According to the twelfth form of the invention, suggestion of the relationship between the production design and the probability of shifting to a special game state is displayed. Therefore, the player can find a specific relationship between the production design and the probability of shifting to the special game state by watching the displayed suggestion. That is, the player can play for a long period of time, without getting bored, with the pleasure of finding out from the displayed suggestions a specific production design having a high probability of shifting to a special game state and with the pleasure of discovering such a specific production design in the versatile production display actually shown.

[0049] According to the thirteenth form of the invention, which of the production designs has a high probability of shifting to the special game state is suggested with a display. Therefore, the player can easily find out a production design having a high probability of shifting to the special game state.

[0050] According to the fourteenth form of the invention, since suggestion display is shown with the design that is the same as or related to the production design, the player can directly grasp the relationship between the production design and the probability of shifting to the special game state.

[0051] According to the fifteenth form of the invention, since suggestion display is shown with an animated image, more concrete suggestion display is possible and the fun of finding out which is the specific production design having a high probability of shifting to the specific game state is enhanced.

[0052] According to the sixteenth form of the invention, if suggestion display is shown when no game is played or no variation display of special symbols is shown, for example when a demonstration image is shown, the demonstration image can be utilized as a means for displaying important information related to games rather than being used as a mere demonstration image. When the suggestion display is shown with the demonstration image in this way, the player can face the game after finding out which of the production designs is the specific one having a high probability of shifting to the special game state, even without understanding the meaning of the production design during the game.

[0053] According to the seventeenth form of the invention, it is possible to prepare a recording medium in which a game program is recorded, which program having a function of permitting a player to play a game by displaying game-related designs including the special symbols and the production designs as described above, to which function is added another function of showing a suggestion display of the relationship between the production design and the probability, so that the player can use the program for example in a home game machine to enjoy the same game as with the above-described game machine. It is also possible to install the program from the recording medium to a general purpose personal computer for example and utilize the personal computer as a game machine.

[0054] This application is based on Japanese patent applications, No. 11-244279 filed in Japan on August 31, 1999 and No. 11-244280 filed in Japan on August 31, 1999, which are entirely incorporated herein by reference.

[0055] This invention will be more completely understood through the following detailed description. Additional application ranges of this invention will become clearer through the following detailed description. However, specific examples in the detailed explanation are preferable embodiments of the invention cited for the purpose of explanation only. For those skilled in the art, it is apparent that various changes and modifications can be made within the scope and spirit of the invention.

[0056] The applicant has no intention of presenting to the public any of the described embodiments. Of the disclosed modifications and alternatives, those which may not be included in what is claimed in words shall be part of the invention under equity.

Brief Description of Drawings

[0057] FIG. 1 is a front view of the game board of a pachinko game machine as an embodiment of the invention.

[0058] FIG. 2 shows a flow of display on the display screen.

[0059] FIG. 3 is a continuation from FIG. 2, showing the flow of display on the display screen.

[0060] FIG. 4 shows a flow of display on the display screen in case of "super love-love Reach (pre-big-hit)."

[0061] FIG. 5 shows a flow of display on the display screen in case of "direct-to-hotel Reach."

[0062] FIG. 6 shows a flow of display on the display screen in case of "date spot Reach."

[0063] FIG. 7 shows a flow of display on the display screen in case of "another guy Reach."

[0064] FIG. 8 shows a flow of display on the display screen while playing a bit hit game.

[0065] FIG. 9 shows Reach evolution rate, big hit

probability for every combination of male and female characters.

[0066] FIG. 10 shows a scene with background "station plaza."

[0067] FIG. 11 shows a scene on the display screen with a background of "seaside park."

[0068] FIG. 12 is an overview table of designs representing real intentions.

[0069] FIG. 13 is a table of probability and occurrence rate of big hit for every combination of real intention designs.

[0070] FIG. 14 is a table of good couples.

[0071] FIG. 15 shows demonstration images on the display screen.

[0072] FIG. 16 shows another example of demonstration images on the display screen.

[0073] FIG. 17 is a block diagram, showing an electric circuit constitution of a pachinko game machine.

[0074] FIG. 18 is a flowchart of a main game control process related to a game played with a liquid crystal display device performed with a main circuit board.

[0075] FIG. 19 is a flowchart of an interruption process.

[0076] FIG. 20 is a flowchart of a special symbol game control process.

[0077] FIG. 21 is a flowchart, showing the continuation of FIG. 20.

[0078] FIG. 22 is a flow chart of main processing performed with a symbol control circuit board.

[0079] FIG. 23 is a flow chart of image processing performed with the symbol control circuit board.

[0080] FIG. 24 is a flow chart of production pattern determination processing performed with a symbol control circuit board.

[0081] FIG. 25 is a table of count value renewal ranges of various types of random number counters.

[0082] FIG. 26 is a big hit judgment table.

[0083] FIG. 27 is a big hit symbol determination table.

[0084] FIG. 28 is a table of determining production groups.

[0085] FIG. 29 is a Reach state judgment table.

[0086] FIG. 30 is a stop symbol determination table.

[0087] FIG. 31 is a production pattern determination table (1) for misses without reaching a Reach state.

[0088] FIG. 32 is a production pattern determination table (2) for misses without reaching a Reach state.

[0089] FIG. 33 is a production pattern determination table (1) for misses after reaching a Reach state.

[0090] FIG. 34 is a production pattern determination table (2) for misses after reaching a Reach state.

[0091] FIG. 35 is a production pattern determination table (1) for big hits.

[0092] FIG. 36 is a production pattern determination table (2) for big hits.

[0093] FIG. 37 is table of looks of male characters.

[0094] FIG. 38 is table of looks of female characters.

Best Mode for Carrying Out the Invention

[0095] Here will be described a pachinko game machine as an embodiment of the invention.

[0096] FIG. 1 is a front view of the game board 10 of the pachinko game machine. A liquid crystal display device 3 as a means for displaying designs related to games is placed in about the center of the game board 10. The liquid crystal display device 3 variation-displays plural symbols expressed with images to show three rows of reels of a slot machine in simulated manner. The variation-displayed symbols are termed "special symbols." The special symbol, if its variation display stops at a specific stop arrangement (such as a stop arrangement "7-7-7" which is termed a "big hit"), indicates a shift to a special game state favorable for the player. In the special game state, to be specifically described later, a big prize hole 5 described later is converted to a favorable state.

[0097] The liquid crystal display device 3 also displays various production displays during the variation display of the special symbols. The production display is expressed in various forms of images: An omen production design representing a "big hit probability" of shifting to the above-mentioned special game state or a "Reach evolution probability" of evolving to the Reach state, or a Reach state production design displayed in the Reach state which may shift to the above-mentioned special game state if one more stop occurs. These omen production design and Reach state production design are expressed in various image forms.

[0098] In this embodiment, as shown in FIG. 2(a) to be described later, special symbols constituted with stylized numerical symbols etc. are displayed in the display zones 50L, 50C, and 50R in the upper part of the display screen 3a of the liquid crystal display device 3. In other display zones are displayed the above-mentioned omen production designs and Reach production designs as game-related production displays. The special symbols are images, expressed with electric signals, of the symbols on the three reels of rotary reels of a slot machine. The omen production designs and Reach production designs are displayed also with animated pictures and letters etc. as well as with designs. In FIG. 2(a) are shown omen production designs using a male character 51 and a female character 52 with the background of a station plaza. The male character 51 and the female character 52 chat with each other, changes their expressions and physical movements. Evolution from the beginning to the end of a specific scenario is displayed with different situations realized by changing the background. That is, depending on the kind of a scenario along which the production display evolves, the ensuing game result varies, and the contents appearing in the course of the production display suggests probabilities of a big hit and evolving into a Reach state.

[0099] The omen production design heralds either that the variation display of the special symbol thereafter

becomes a Reach state or that the variation display stops after reaching a Reach state at a specific state indicating a "big hit" such as "7-7-7." The omen production design is constituted to change into various display states.

[0100] Therefore; the player can predict to some extent the probability of evolving into a Reach state or the appearance of a big hit thereafter by recognizing along which scenario the contents displayed with the omen production design are evolving and by grasping the development of a story.

[0101] When a Reach state is reached, the production display is shown with contents of the scenario in the state of having greatly evolved. For example, when two, male and female characters are placed in a different situation with a different background, the player can easily understand that the scenario has evolved greatly and easily recognize that the game has reached a Reach state. The probability of a big hit is made different according to the extent of evolution. Such a production display will be described later more in detail for specific contents of the display.

[0102] In this way, it is arranged that, in case a Reach state is reached, a Reach state production design separate from the omen production design is displayed as a production display for informing the player of reaching that state. The Reach state production design is shown in the course of the evolving story and its display manner is made different according to the big hit probability.

[0103] Again referring to FIG. 1, a startup win hole 4 for a game ball to enter and start variation display of the special symbols of the liquid crystal display device 3 is provided below the liquid crystal display device 3. The startup win hole 4 comprises a variable prize device convertible to a first state unfavorable for the player and a second state favorable for the player. It is designed that, when a game ball enters the hole 4 and the second state occurs, a specified number (for example five) of prize balls are dispensed.

[0104] The startup win hole 4 has a prize space that can hold a game ball or two even in the first state unfavorable for the player, and so a ball can enter the hole.

[0105] An LED display device 2 having seven segments is provided above the liquid crystal display device 3. The LED display device 2 starts a variation display when a game ball passes through passage ball gates 6a, 6b located on the game board 10. When the variation display of the LED display device 2 stops at a predetermined specific state, for example "7," the startup win hole 4 is converted to the second state favorable for the player.

[0106] Four LED operation memory lamps 16 are provided around the LED display device 2. The LED operation memory lamps 16 memorizes the number, up to four, of passages of game balls through the passage ball gates 6a, 6b every time the ball passes, and notifies the player of the number of variations, possible at that time, of the LED display device 2. The fifth and later passages are not counted and become invalid.

[0107] Four startup win memory lamps 15, two for each of right and left sides, are provided above the liquid crystal display device 3. This is arranged to memorize the number of wins, up to a limit of four, with balls entering the startup win hole 4 while the variation display is being performed with the liquid crystal display device 3, and to notify the player of the number of variation displays that can be shown on the liquid crystal display device 3 at that time by causing the startup win memory lamps 15 to be on. Therefore, in the state of all the four lamps 15 being lit, a ball entry into the startup win hole 4 is invalid as a variation display startup condition.

[0108] A big win hole (so called "attacker") 5 convertible to either a closed state disadvantageous to the player or an open state advantageous to the player is provided below the startup win hole 4. The big win hole 5 comprises a variable win device of a type having doors and convertible to an open state advantageous to the player when the variation display of the special symbols on the liquid crystal display device 3 stops to show a specific combination of the special symbols, a "big hit." It is arranged that when a game ball enters the hole 5, a specified number (for example 15) of prize balls are dispensed.

[0109] The afore-mentioned special game state is the game state of permitting 16 rounds of a big hit game with the big win hole 5 open until 10 balls enter the hole or 30 seconds elapse. However, in order to play a next round after the first round of big hit game is over, a specific condition, generally called "V win" must be met.

[0110] Here, the big win hole 5 is constituted with plural win holes. The V win is the case in which a game ball enters specific one of the plural win holes. The specific win hole is usually set in the center of the big win hole 5.

[0111] On the game board 10 are further provided, pin wheels 12a, 12b, general win holes 13a, 13b, 13c, 13d, 13e, 13f for dispensing five prize balls to the player for every entry of a win ball, and board side lamps 14a, 14b.

[0112] The contents of display on the display screen 3a are described below using specific examples.

[0113] when a game is started with the liquid crystal display device 3, variation display of specific symbols begins on the display zones 50L, 50C, and 50R of the display screen 3a as shown in FIG. 2(a). At the same time, a production display begins to produce a scenario.

[0114] FIG. 2(a) shows the state immediately after the variation display of the specific symbols begins. A production display is shown as follows: A background scene of a station plaza is shown on the display screen 3a. Next, a male character 51 as an omen production design comes into the scene from the left of the display screen 3a, and a female character 52 from the right. And as shown in FIG. 2(b), the display changes to show both characters 51 and 52 standing close to each other.

[0115] After that, as the scenario evolves, attachment designs attached to the production design are shown. For example as shown in FIG. 2(c), when the variation

display in the left display zone 51L stops, a word design 53a representing the words the male character 51 speaks to the female character 52 and a true (real) intention design 54a not necessarily in agreement with the contents of the word design 53a are shown respectively as the attachment designs. Here, the word design 53a of the male character 51 is shown as "You wanna sleep with me, yeah?" and the true intention design 54a shows that the true intention of the male character 51 is almost the same as the contents of the word design 53a.

[0116] In succession as shown in FIG. 2(d), when the variation display in the right display zone 51R stops, a word design 55a representing the words the female character 52 speaks back to the male character 51 and a true intention design 56a are shown respectively as the attachment designs. Here, the word design 55a of the female character 52 is shown as "That's what I'm gonna say!" and the true intention design 56a shows that the true intention of the female character 52 is almost the same as the contents of the word design 55a.

[0117] On the contrary, in some cases, the true intention design is different in contents from the word design, namely the words do not in agreement with the true intention. Such a case is shown for example in FIG. 2(e) in which the true intention design is 56b when the true intention design 56a is shown. When the word design is in disagreement in the contents with the true intention design, the big hit probability thereafter is low.

[0118] Here, various patterns as shown later in FIGs. 31 to 36 (production pattern determination table) are prearranged for the contents of the word designs. Therefore, as for the contents of the word designs shown, conversations of the male and female characters are not necessarily going on smoothly under mutual understanding, namely consistent, as shown in FIG. 2 (d). The contents of the word designs show big hit probability and Reach probability. When the conversation between the male and female characters is consistent as shown in FIG. 2 (d), the big hit probability and Reach evolution rate are high.

[0119] Various patterns are preset to the true intention designs, specifically 20 patterns, H1 to H20, as shown in FIG. 12. In FIG. 2 (d), the true intention of the female character 52 is shown with the true intention design 56a (H14 in FIG. 12) indicating that the true intention of the female character is almost the same as the contents of the word design 55a. However, if the true intention design H19 of FIG. 12 is shown in FIG. 2 (d), it cannot be considered to be in agreement with the contents of the word design 55a. In that case, the big hit probability or Reach evolution rate is low.

[0120] However, even if the conversation between the male and female characters is inconsistent, or if the true intention design 56a is inconsistent with the word design 55a in contents, a big hit may occur depending on the scenario evolution. Therefore, the player's attention to the production display is not distracted.

[0121] As shown in FIG. 2 (d), if a Reach state is reached with the same stop symbols in the right and left display zones 50R and 50L, the contents change according to the evolution of the scenario. However, if the stop symbols in the right and left display zones 50R and 50L are not the same each other as shown in FIG. 2 (e), a miss results. In case of such a miss, the word design 55b shows a harsh contents such as "Go away, bozo!"

[0122] As described above, the contents of the attachment designs such as the word design and the true intention design greatly influence the expectations of the player for a big hit. Each attachment design is shown simultaneously with the stop time point of the variation display, and in case their contents are consistent, the stop-displayed special symbols also show a Reach state. Namely, it is constituted that the game situation can be accurately grasped by only watching the attachment design display, without paying attention to the special symbols moving at high speeds.

[0123] When the game comes to a Reach state, the production display changes, after displaying "Reach" as shown in FIG. 3 (f), to that of an evolved, completely different state of the scenario. Therefore, the player not only can easily recognize from the production display the occurrence of a Reach state but also can have enhanced expectations for big hits to follow.

[0124] The scenario evolves roughly in four patterns; "super love-love Reach," "direct to hotel Reach," "date spot Reach," and "another guy Reach." Although these evolution patterns have different contents, the end of the scenario is whether the two, male and female characters finally check in the hotel. If the final display indicates that the male and female characters check in the hotel, the game results in a big hit with the three display zones 50L, 50C, and 50R showing the same designs. If the male and female characters do not check in the hotel, the game results in a miss.

[0125] FIG. 4 shows a scenario evolution of the above-mentioned "super love-love Reach." In this "super love-love Reach" state, many heart marks are shown in the background, and the scenario evolves that the male and female characters go directly to and check in the hotel. That is, once the game results in this "super love-love Reach" state, thereafter the game results in a big hit with a probability of 100 %. And after showing a big hit image of FIG. 4 (h3), the display changes to a big hit game image.

[0126] Referring again to FIG. 3, in case the scenario evolves to a state other than the "super love-love Reach, " there may be a case as shown in FIG. 3 (g) in which large letters are shown in the center of the display screen 3 (a) after reaching to a Reach state. Here, an expression "I'm gonna make it tonight!" is shown. To this phrase too, various patterns are allocated which correspond to the words before reaching a Reach state as shown in FIGs. 31 to 36 (production pattern determination table). These phrases represent the player's zeal or spirit for the future evolution of either of the characters coming into the scene. In case these phrases are

shown, the big hit probability is higher than usual and so the player can hope further evolution of the scenario.

[0127] FIG. 5 shows a scenario evolution in the "direct to hotel Reach" case. In this "direct to hotel Reach" case, like in FIG. 4, the scenario evolves that the male and female characters go direct to a hotel. If the characters check in the hotel without any happening, the game results in a big hit as shown in Fig. 5(j3). However, unlike the above case of "super love-love Reach," they do not necessarily check in the hotel.

[0128] For example, in the scene shown in FIG. 5 (j4), if the female character in front of the hotel expresses the phrase "I'm leaving, then." and disappears, the game results in a miss. As a matter of course, the special symbols in the stopped state are not the same each other.

[0129] Even in the case a big hit like FIG. 5 (j3) as the final result of the scenario evolution is to be shown, there may be a case in which the display of FIG. 5 (j5) is shown and the two characters do not smoothly check in the hotel. In that case, the player frets about the game evolving to a big hit. With such a scenario evolution along with a display causing fret about the game evolving to a big hit, the player's mind is mixed with expectations to a big hit and anxiety about a miss, and so the tension of the player is enhanced.

[0130] FIG. 6 shows the scenario evolution of the case of the above "date spot Reach." In this "date spot Reach" case, various dating spots are shown where the male and female characters 51, 52 visit. In this FIG. 6, scenes are shown in which the male and female characters 51, 52 pass in front of a rahmen (Chinese noodle) shop (FIG. 6 (k1)), enter a bar (FIG. 6 (k2)), and come out of the bar (FIG. 6 (k3)). The scenario evolution thereafter is the same as that of the "direct to hotel Reach" case shown in FIG. 5.

[0131] In FIG. 6, there may be a case in which the words of the female character 52 are shown with "I don't wanna eat here!" as shown in FIG. 6 (k4). In that case, the game later results in a miss.

[0132] FIG. 7 shows the scenario evolution of the above "another guy Reach" case. In this "another guy Reach" case (FIG. 7 (m1)), scenes are shown in which male and female characters 51, 52 pass in front of various dating spots while another male character 57 comes walking from the opposite direction. After that, if the another male character 57 simply passes by, the display shifts to that of FIG. 5 (j2), namely the above "direct to hotel Reach," and the game results in a big hit. That is, in case the another male character 57 simply passes by, it indicates that the big hit probability is 100 %.

[0133] However, there may be a case in which the female character 52 says "Sorry. I have a date with that boyfriend." as shown with the word design 55e in FIG. 7 (m2), and leaves with the another male character 57 as in Fig. 7(m3). This corresponds to a miss, with the special symbols not in agreement with each other in their stopped state, and the game with this display screen 3a is over.

[0134] When a game played with the liquid crystal display 3 results in a big hit, the game becomes the special game state during which a display as shown in FIG. 8 begins on the display screen 3a. In this special game state, as described before, the big hit game in which the big win hole 5 is converted to a favorable state may be played up to 16 rounds. Here, the display on the display screen 3a is changed at every turn of the round to notify the player of the turn of the round.

[0135] For example, in the special game state, a display is made as shown in FIG. 8 (p1) followed by a round display as shown in FIG. 8 (p2) to notify that the first round of the big hit game is going on. With the round display shown in FIG. 8 (p2), the screen shows an introduction of a female character coming into the scene of a production display.

[0136] After that, the display changes to introduce each of the other female characters in succession at every turn of the round. The female character introduction screen displays all the female characters except Gloria and Sandra shown in FIG. 9 (to be described later) up to the seventh round of the big hit game.

[0137] When the game enters the eighth round, the display state of each round displays the female character and her favorite male partner (a male character that makes a best couple later). This round display shows all the female characters except Gloria and Sandra shown in FIG. 9 (to be described later) up to the 14th round of the big hit game.

[0138] In the 15th round, along with the female character display, a round display with letters is made as "Gotcha, two more rounds to go." In the final 16th round, along with the female character display, a round display with letters is made as "It's the final round, watch out, hold on."

[0139] Here, FIG. 9 shows the combinations of male and female characters appearing during the production display; and big hit probability, Reach evolution rate, and appearance rate when the combinations come into the scene during the production display. In the production display of this embodiment, two, male and female characters appear as the scenario goes on. As shown in FIG. 9, plural types of male and female characters appear and their combinations (types of couples) are made to represent different Reach evolution rates and big hit probabilities.

[0140] In FIG. 9, the male-female combinations indicated with black hearts ((I) to (VII)) are called "the best couples." Their Reach evolution rate is 100 %, namely the game evolves to a Reach state with a probability of 100 %, and their big hit probability is 15.182 % which is higher than other couples in probability of evolving to a big hit.

[0141] Here, the couple appearing in the display examples in the above FIGs. 2 to 8 is the combination of the male character "Bob" and the female character "Cathy" in FIG. 9, which is one of the best couples.

[0142] The male-female combinations indicated with

white hearts are called "normal couples," with a Reach evolution rate of 18.575 %, and a big hit probability of 0.391 %, both lower than those of the best couples.

[0143] The male-female combinations indicated with broken hearts are called "worst couples," with a Reach evolution rate of 2.002 %, namely little probability of evolving to a Reach state, and a big hit probability of a very low 0.020 %. Here, as seen in FIG. 9, the female characters "Gloria" and "Sandra" are not included in any of the best couples or the normal couples. The best couples and the normal couples are constituted with combinations of seven female characters, other than "Gloria" or "Sandra," and specific male characters. Therefore, the contents of the round display shown during the special game suggest not only the ordinal number of the round but also the characters constituting the best couples of high probabilities of big hits.

[0144] Plural backgrounds are preset to the scene where the male and female characters appear. An example of the background is a "station plaza" as shown in FIG. 10, and another is a "seaside park" as shown in FIG. 11. Changing the scene setting by the use of different backgrounds makes it possible to evolve the scenario according to respective backgrounds, increase the number of variations of the production display, and enhance the fun of the game.

[0145] There may be a case as shown in FIG. 10 in which a train design 58 passes across the background of the scene where the male and female characters appear, or a case as shown in FIG. 11 in which a dog design 59 appears. These are the omen production designs indicating the Reach evolution rate and the big hit probability. In this embodiment, the passage of the train design 58 and the appearance of the dog design 59 are very rare. Therefore, if they appear, the big hit probability is 100 %.

[0146] The true intention designs 54a and 56a are arranged to produce different probabilities of big hit depending on combinations they make. FIG. 12 is an overview table of the true intention designs shown as the production display. FIG. 13 shows combinations of the true intention designs shown in FIG. 12 and their probabilities of big hit. As shown in FIG. 13, when any combination corresponding to the affectionate rank is shown on the production display, the big hit probability is 2.47 %. When any combination corresponding to the date rank is shown on the production display, the big hit probability is 0.28 %. When any combination corresponding to the no-way rank is shown on the production display, the big hit probability is 0.07 %.

[0147] According to FIG. 13, any combination in the affectionate rank or in the date rank is constituted with true intention designs related to each other to some extent. Any combination in the no-way rank is constituted with true intention designs having nothing to do with each other. The case of FIG. 2 (d) described before corresponds to the combination 1 (H14 + H14) of the affectionate rank with a high probability of big hit. The case of FIG. 2 (e) corresponds to the combination 6 (H14 + H19) of the no-way rank with a low probability of big hit.

[0148] As described above, the production display makes it possible to completely grasp the contents of the game played on the liquid crystal display device 3 by simply watching the scenario evolution shown with the production display. Therefore, there is no need any more to watch the special symbols displayed to vary at high speeds.

[0149] The pachinko game machine of this invention is further arranged to show various demonstration displays (hereafter 'demo displays' for short) when no variation display is shown on the liquid crystal display device 3. The demo display not only shows the flow of the entire game played on the liquid crystal display device 3 but includes important information related to the game.

[0150] This demo display shows suggestion of relationship of various production displays appearing during the variation display relative to the Reach evolution rate and the big hit probability. Specifically the display shows the omen production designs constituted with the male and female characters, and suggests the presence of strong relationship between the omen production designs and the Reach evolution rate and the big hit probability.

[0151] As described above, the omen production design shown with the combination of the male and female characters of the best couple has very high Reach evolution rate and high big hit rate. Here, that the seven best couples ((I) to (VII) in FIG. 9) have very high probabilities of Reach evolution and big hit is implicitly notified by the random display of the couples during the demo display. That is, the demo display implicitly notifies the player of important information related to the game.

[0152] Therefore, the player, seeing the demo display repeatedly, is impressed with the couple of the characters appearing in the scene. As the player continues playing, the player becomes aware that the impressed couples are high in the Reach evolution rate and the big hit probability, and can have additional fun of anticipating the appearance of the best couple during the variation display. That is, notifying the player of the best couple not directly but implicitly, additional fun of finding information advantageous to the player is provided and the pleasure of the game is enhanced.

[0153] FIG. 14 shows combinations of the male and female characters for the best couples shown in FIG. 9. The best couple (I) is the combination of the male character "Bob" and the female character "Cathy," the best couple (II) is "Larry" and "Jean," the best couple (III) is "Alex" and "Mary," the best couple (IV) is "Ted" and "Ann, " the best couple (V) is "Paul" and "Martha," the best couple (VI) is "Bruce" and "Cindy," and the best couple (VII) is "Mark" and "Karen." These best couples appear randomly in the demo display.

[0154] Specific situations of the demo display in which the above best couples ((I) to (VII) in FIG. 9) appear are shown in FIGs. 15-D1 to 15-D4. Here, a scene with a

station plaza as a background is displayed on the display screen 3a and the above best couples pass right and left across the scene. As shown in this FIG. 15, the contents of the display is likely to be overlooked by the players who do not know the meaning of the best couples. However, as the play goes on and the meaning is gradually understood, the contents of the demo display become very interesting to the player.

[0155] The female characters "Gloria" and "Sandra" without partners to make up the best couples shown in FIG. 9 are supposed to pass by themselves during the demo display. That the female characters "Gloria" and "Sandra" pass by themselves implies a very low probability of a big hit, which the player does not want.

[0156] For those players who become aware that the demo display is implying important information on the game, additional pleasure is provided to seek more advantageous information. For example, in FIG. 15-D5, the train design 58 passes through the background during the demo display, and in FIG. 16-D6, a dog design 59 appears in front of the background during the demo display. Since the train design 58 and the dog design 59 correspond to the big hit probability of 100 % as described above, a new fun of play, namely the player's finding those, is added.

[0157] As for beginners, if they become aware at an early stage that the demo display is suggesting important information on the game, they can face the game with adequate knowledge of the production display without acquiring much experience.

[0158] The above demo display on the liquid display device 3 may alternatively arranged to be shown at specific time intervals when no game is played on the liquid display device 3, or on demand by the player. Further alternatively, it may be arranged that the demo display is started when no game is played on the liquid display device 3 continuously for a specific period of time, namely when the symbol variation is not made continuously for a specific period of time, and that the demo display is finished upon starting the game on the liquid display device 3.

[0159] FIG. 17 is a block diagram of an electric circuit part of the pachinko game machine of the invention.

[0160] As shown in FIG. 17, the electric circuit part of the pachinko game machine of the invention is constituted with a main circuit board 30, a relay circuit board 34, a symbol control circuit board 31, a voice control circuit board 32, and a prize ball control circuit board 33.

[0161] The main circuit board 30 is constituted about a microcomputer with a central processing unit (CPU), a read-only memory (ROM), and a random access memory (RAM), readable and writable memory means.

[0162] The main circuit board 30 is connected to the relay circuit board 34 to which are connected the following components; a passage ball sensor 20 as a game ball detecting means for detecting game balls passing through the passage ball gates 6a and 6b described before, a start win ball sensor 22 for detecting balls entering the start win hole 4 described before, a big win ball sensor 25 for detecting balls entering the big win device 5 described before, a win ball sensor 21 for detecting balls entering the general win holes 13a, 13b, 13c, 13d, 13e, and 13f, an ejected ball sensor 23 for detecting balls ejected from a ball ejector (not shown), a return ball sensor 24 for detecting balls ejected but returned without reaching the game board. To the relay circuit board 34 are further connected actuators; an LED display device 2, a lamp display device 41 for connection to board side lamps 14a and 14b, the start win hole 4, and the big win device 5.

[0163] When the above sensors detect balls, their detection signals are inputted to the CPU in the main circuit board 30 to operate and control the respective actuators according to the input signals. Control orders are also transmitted to the symbol control circuit board 31, to the voice control circuit board 32, and to the prize ball control circuit board 33.

[0164] When a game is being played, if the passage ball sensor 20 detects a game ball passing through the passage ball gates 6a or 6b, and a detection signal is outputted, the microcomputer in the main circuit board 30 judges a win in response to the detection signal, and controls the display on the LED display device 2 according to the judgment result.

[0165] When the start win sensor 22 detects a ball entering the start win hole 4 and outputs a detection signal, the microcomputer in the main circuit board 30 transmits a control signal to the symbol control circuit board 31 to carry out various settings for the game on the liquid display device 3 according to the detection signal, and controls the liquid display device 3 according to the judgment with the symbol control circuit board 31. Here, the symbol control circuit board 31 comprises, separately from the main circuit board, a CPU, a ROM, and a RAM. Control programs for the game played on the liquid display device 3 and graphic data necessary for the game are stored in the ROM in the symbol control circuit board 31.

[0166] Based on the above detection of the game ball with the start win sensor 22, the microcomputer in the main circuit board 30 makes a judgment if the game resulted in a big hit. In case the judged result is a big hit, the big win device 5 is converted to the open state with the doors of the big win device 5 opened to facilitate game balls to enter.

[0167] The voice control circuit board 32 is provided with various voice data and produces voices with the speaker 40 according to control orders transmitted from the main circuit board 30.

[0168] The prize ball control circuit board 33 operates a prize ball device 43 according to control orders transmitted from the main circuit board 30 according to each type of win, and dispenses game balls.

[0169] The control process for the games played with the liquid crystal display device 3 using the main circuit board 30 and the symbol control circuit board 31 is de-

scribed below in reference to the flowcharts shown in FIGs. 18 to 24.

[0170] The game control process shown in FIGs. 18 to 24 is performed with the main circuit board 30.

[0171] With the main circuit board 30, a main game control process (ST1 to ST7) shown in FIG. 18 is repeated and also periodical interruption process (ST10 to ST20) shown in FIG. 19 is performed at specific time intervals (for example every three milliseconds) on condition that an interruption permitting flag is set.

[0172] The flow of the main game control process shown in FIG. 18 is described below:

[0173] ST1: Set an interruption permitting flag.

[0174] ST2: Renew the random number counter for the stop symbol determination and the random number counter for the Reach judgment.

[0175] The stop symbol determination random number counter is for extracting stop symbol determination random numbers used to determine the stop arrangement with the liquid crystal display device 3 when a miss is determined in the above big hit judgment, and renews count values within the range of 0 to 11 shown in FIG. 25. The renewal process is arranged to start from 0 increasing by 1 up to the upper limit value of 11 (hereafter called 'count-up') and again starts counting from 0 up. Incidentally, the stop symbol determination random number counter is constituted with three counters; a left stop symbol determination random number counter, a middle stop symbol determination random number counter, and a right stop symbol determination random number counter, to perform the renewal process individually.

[0176] The Reach judgment random number counter is for extracting the Reach judgment random numbers used to determine whether or not the variation display of the special symbols is made to the Reach state in case of a miss, and renews count values within the range of 0 to 9 shown in FIG. 25. That is, the renewal process is arranged to count from 0 up to the upper limit value of 9, and again from 0 up.

[0177] ST3: Judge if a control command for the error check process is being transmitted. If yes, return to the above step ST1; if no, go to the process of ST4.

[0178] ST4: Generate a command for the error check process.

[0179] ST5: Perform error check process according to the command generated in ST4.

[0180] ST6: Judge if error is occurring. If yes, return to ST1. If no, go to the process ST7.

[0181] ST7: Perform the special symbol game control process shown in FIGs. 20, 21 to be described later. As described before, periodical interruption process is performed according to the process flow of ST10 to ST20 shown in FIG. 19.

[0182] ST10: Retract all the registers.

[0183] ST11: Perform renewal process with the big hit judgement random number counter, the big hit symbol determining random number counter, and the production group determining random number counter.

[0184] The big hit judgment random number counter is for extracting the big hit judgment random numbers used to determine whether the game result with the liquid crystal display device 3 is to be made a big hit (big hit judgment) in which the same special symbols appear, and renews count values within the range of 0 to 334 shown in FIG. 25. That is, the renewal process is arranged to count from 0 up to the upper limit value of 334, and again from 0 up.

[0185] The big hit symbol determining random number counter is for extracting the big hit symbol determining random numbers used to determine the stop arrangement with the liquid crystal display device 3 when the above big hit judgment results in a big hit, and renews count values within the range of 0 to 11 shown in FIG. 25. That is, the renewal process is arranged to count from 0 up to the upper limit value of 11, and again from 0 up.

[0186] The production group determining random number counter is for extracting the production group determining random numbers used to determine the production group to be described later, and renews count values within the range of 0 to 1023 shown in FIG. 25. That is, the renewal process is arranged to count from 0 up to the upper limit value of 1023, and again from 0 up.

[0187] ST12: Perform renewal process with each timer.

[0188] ST13: Upon detecting input signals from various sensors such as the passage ball sensor 20, the win ball sensor 21, and the start win ball sensor 22, perform processes according to the input signals. For example, in case an input signal from the start win ball sensor 22 is detected, whether the start win memory number is less than the upper limit value (above-mentioned four) is judged. If below the upper limit value, the count values renewed respectively with the big hit judgment random number counter, the big hit symbol determining random number counter, and the production group determining random number counter are extracted as the random numbers and, transferred to and stored in the RAM of the main circuit board 30.

[0189] ST14: Perform a process related to the display with the LED display device 2 (this is called "ordinary symbol process"). In this ordinary symbol process are performed a win judgment with the LED display device 2 and a display control of the LED display device 2 based on the judgment result.

[0190] ST15: Perform decoration control process of turning on, off, and flashing various LEDs according to the game state.

[0191] ST16: Perform prize ball dispensing process in response to requests for dispensation requested as a result of game balls entering the win hole.

[0192] ST17: Perform error judgment process if various errors have occurred in the game machine.

[0193] ST18: Perform the process of transmitting con-

trol commands to the symbol control circuit board 31, etc.

[0194] ST19: Reset each register.

[0195] ST20: Set an interruption permitting flag.

[0196] As shown in FIG.20, a special symbol game control process judges whether or not any startup prize is stored (ST30). When it is judged that any startup prize is not stored, following processes are performed.

[0197] A demonstration display switching timer for governing the switching timing between the demonstration display in the liquid crystal display device 3 and the game in the variation display of special symbols (hereinafter referred as "ordinary game), counts the predetermined time duration to judge if an order to switch to the demonstration display is outputted (ST31). If it is judged to output the switching order, then it is judged whether the demonstration display is in display state (ST32). If the demonstration display is in display state, the process switches the state to the ordinary game (ST33) and if in the ordinary game state, then changes to the demonstration display (ST34).

[0198] If it is judged at ST30 that a memory of the startup prize is stored, then the following processes are performed.

[0199] The random number for big hit judgment which is stored in RAM at ST13 is read, and it is then judged whether or not in the big hit state, using a big hit judgment table stored in a ROM, as shown in FIG.27 (ST35). In the case if the random number read for big hit judgment is "7" it is judged as big hit.

[0200] When the big hit judgment is provided at ST35, the random number for big hit symbol determination which is stored in RAM at ST13 is read, and the big hit symbol is determined from the big hit symbol determination table stored in the ROM, as shown in FIG.27 (ST41). As shown in this FIG.27, in the embodiment twelve types of special symbols are provided. The big hit is a stop arrangement in which three of each special symbol are aligned. The data of these symbols are in turn stored in a ROM in the symbol control circuit board 31.

[0201] When the big hit symbol is determined, a production group determination table for big hit (FIG.28C) is selected from three production group determination tables stored in the ROM, as shown in FIG.28 and the random number for production group determination which is stored in the RAM at ST13 is used to determine the production group required to determine the production display (ST42).

[0202] When the judgment of miss is provided at ST35, the random number for Reach judgment which is stored in the RAM at ST13 is read, and it is determined whether or not in Reach state (whether or not the variation display is to be switched to the pre-bi-hit state), using the Reach judgment table stored in the ROM, as shown in FIG.29 (ST36).

[0203] When the Reach judgment is provided at ST36, the random numbers for left side stop symbol determination, central stop symbol determination and right side stop symbol determination which are stored in the RAM at ST13 are read, and the stop arrangement of the special symbol is determined from a left side stop symbol determination table, central stop symbol determination table and right side stop symbol determination table (ST39). In this determination process, the left side stop symbol is firstly determined and the same symbol is then determined for the right side stop symbol. If the symbol determined from a random number for the central stop symbol determination is identical to the left side and right side stop symbols, the central stop symbol is changed to one fed by one frame.

[0204] If a stop arrangement of miss after reaching a Reach is determined, then a production group determination table (FIG.28B) for misses after reaching a Reach is selected, as shown in Fig.28 and the random number for production group determination which is stored in the RAM at ST13 is used to determine the production group (ST40).

[0205] If the judgment of miss without Reach is provided at ST36, as is the case with ST39, the random numbers for left side stop symbol determination, central stop symbol determination and right side stop symbol determination which are stored in the RAM at ST13 are read to determine the stop symbol. Different from the determination process in ST39, the left side and the central stop symbols are firstly determined from random numbers for left side and central stop symbol determinations. If the right side stop symbol determined from a random number for the right side stop symbol determination is identical to the left side stop symbol, the right side stop symbol is changed to one fed by one frame (ST37).

[0206] If a stop arrangement of miss without reaching a Reach is determined, then a production group determination table (FIG.28A) for misses without reaching a Reach is selected, as shown in Fig.28 and the random number for production group determination which is stored in the RAM at ST13 is used to determine the production group (ST38).

[0207] As described above, when the stop arrangement of special symbol is determined, a symbol variation command is generated to control the liquid crystal device for displaying on the basis of such determination (ST43) and then the symbol variation command is transmitted to the symbol control circuit board 31 (ST44).

[0208] Now, entering a flow chart in FIG.21, it is judged whether or not a big hit is provided (ST45). If judged as a miss, the process goes to ST53 described hereinafter in details. If judged as a big hit, then a big hit fanfare process is performed to control the sound control circuit board 32 for outputting sound (big hit fanfare) which is generated in a loud speaker 40 to notice the big hit (ST46).

[0209] Then, a round display switching timer for governing the timing when an ordinary game state is changed to a round display of a big hit state with the

liquid crystal display device 3, counts predetermined time duration to perform the switching of the ordinary game to the round display (ST47).

[0210] A big hit game time check process for governing the execution time (30 sec) for one round of a big hit at a big prize hole 5 and for governing the latency for switching of the round display is performed (ST48). As a result of the check process, if the lapse of the execution time duration of one round of the big hit state is verified, the flapper of the big prize hole 5 is processed to close. If the lapse of the latency for the switching of the big hit state is verified, then the flapper of the big prize hole 5 is processed to open (ST49).

[0211] Following ST49, it is judged whether or not the big prize hole 5 is being opened (ST50). When it is opened, the process returns to ST48 process to continue the big hit state. When it is not opened, the process judges if the V win described before is established (ST51). If the V win is established then the process returns to ST48 process to continue the big hit state. If the V win is not established then the bit hit state is completed (ST52).

[0212] And the working area of the RAM which has been used for the special symbol game control process is reset (ST53).

[0213] FIG.22 is a flow chart, showing a main process performed by the special symbol control circuit board 31.

[0214] The count value of the random number counter for extracting a random number for production pattern determination which is used for determining the production pattern of a production display described hereinafter is renewed in a range between 0 and 127, as shown in FIG.25 (ST60).

[0215] Then, it is judged whether or not a symbol variation command is received from the main circuit board 30 (ST61). If the symbol variation command is received, a command receipt flag is set (ST62).

[0216] And, it is. judged whether or not in error state (ST63). If not in error state, image processing is performed (ST64).

[0217] Referring to a flow chart in FIG.23, the image processing will be described hereinafter.

[0218] If in big hit state ("YES" at ST70), then it is judged at ST62 whether or not the command receipt flag is set (ST71). If not set, the round display is kept to be in display state (ST74). If the command receipt flag is set, then an image to be displayed in the round display is set (ST72) according to the symbol variation command received from the main circuit board 30. After canceling the command receipt flag (ST73), the round display process is performed according the setting (ST74).

[0219] If in demonstration display state ("YES" at ST75), then it is judged whether or not the command receipt flag is set (ST76). If not set, the demonstration display is kept to be in display state (ST79). If the command receipt flag is set, then an image to be displayed in the demonstration display is set (ST77) according to the symbol variation command received from the main circuit board 30. After canceling the command receipt flag (ST78), the demonstration display process is performed according the setting (ST79).

[0220] If in an ordinary game state ("YES" at ST80), then it is judged whether or not the command receipt flag is set (ST81). If not set, the variation display and production display are kept to be in display state (ST84). If the command receipt flag is set, then variation display related setting for the special symbol in the ordinary game (ST82) and the production pattern determination process (ST83) are performed according to the symbol variation command received from the main circuit board 30. After canceling the command receipt flag (ST84), the ordinary game process (display process for the variation display and production display) is performed (ST85).

[0221] Referring to a flow chart in FIG.24, a production pattern determination process performed at ST83 will be described hereinafter.

[0222] Based on the production group which are determined at ST38, ST40 and ST42 and contained in the symbol variation command received from the main circuit board 30, one of the production pattern determination tables in FIG. 31 through FIG.36 is selected to determine the production pattern to be displayed as a production display.

[0223] If the production group 0 is selected ("YES" at ST86), in other words, in the state of a miss without reaching a Reach, as shown in FIG.28, a production pattern determination table (1) for misses without reaching a Reach in FIG.31 and a production pattern determination table (2) for misses without reaching a Reach in FIG. 32 are selected. Then the count value of the random number counter for production pattern determination which is renewed at ST60 is extracted as the random number for production pattern determination to determine the production pattern allocated with a range of random numbers in which said random number is included, as a production pattern to be displayed (ST87).

[0224] If the production group 0 is not selected and one of the production groups 1 to 20 is selected ("YES" at ST88), in other words, in the state of a miss after reaching a Reach, as shown in FIG.28, a production pattern determination table (1) for misses after reaching a Reach in FIG.33 and a production pattern determination table (2) for misses after reaching a Reach in FIG.34 are selected. Then the count value of the random number counter for production pattern determination which is renewed at ST60 is extracted as the random number for production pattern determination to determine the production pattern allocated with a range of random numbers in which said random number is included, as a production pattern to be displayed (ST89).

[0225] If one of the production groups other than 0 to 20, or the production groups 21 to 37 is selected ("NO" at ST88), in other words, in the state of a big hit, as shown in FIG.28, a production pattern determination ta-

ble (1) for big hit in FIG.35 and a production pattern determination table (2) for big hit in FIG.36 are selected. Then the count value of the random number counter for production pattern determination which is renewed at ST60 is extracted as the random number for production pattern determination to determine the production pattern allocated with a range of random numbers in which said random number is included, as a pattern to be displayed (ST90).

[0226] As shown in FIG.31 through FIG.36, in the embodiment 252 types of pattern are provided as the production pattern, and those patterns are stored in the ROM within the symbol control circuit board. In these various production patterns, appearing characters, expressions of the characters, true intention designs, words, backgrounds, words upon entering a Reach and types of Reach is previously set in advance and a variety of scenarios are configured by combining them each other.

[0227] Now, F1 - F4 in FIGs.31 to 36 represent expressions of respective characters, practical forms of which are shown in FIG.37 and FIG.38. FIG.37 shows varied expression types of male characters and FIG.38 shows varied expression types of female characters. H1 H20 represent true intention designs of respective characters, practical forms of which are shown in FIG.12.

[0228] Also, as the display means, a display apparatus configured of an array of a number of LEDs, CRT, plasma display device and electro-luminescence device or the like may be used, as well as liquid crystal display device.

[0229] Although the embodiments described are applied to a pachinko game machine, this invention may be also applied to other game machines, such as one including an electrical display device or any imaging device. The player can enjoy the game in a home game machine, using a game program capable to perform pseudo-operations of the pachinko game machine described above. It is also possible to install the program from the recording medium to a general purpose personal computer for example and utilize the personal computer as a game machine.

[0230] Also, the special game state may correspond to a great deal of release of coins (or tokens) in a slot machine.

Industrial Applicability

[0231] A game machine capable of making it possible for a player to reliably learn the game evolution such as a big hit, a Reach evolution, and a miss even without watching variation-displayed special symbols, by simply watching production displays can be provide. Furthermore, a game machine capable of making it possible for a player to grasp production contents without depriving the player of the pleasure of finding specific production display of information beneficial to the player can be also provided.

Claims

1. A game machine comprising:

a display means for displaying a special symbol indicating a shift to a special game state if a variation display stops at a specific form and displaying game-related production display; and

a control means for determining the stop result of the variation display and controlling the display of the display means according to the determination; the control means being constituted to be adapted to control the display means to perform production display of producing a scenario from its beginning to its end during a period from a start to an end of the variation display.

2. A game machine according to claim 1, wherein the end of the scenario indicates whether to shift to the special game state.

3. A game machine according to claim 1 or 2, wherein the control means is constituted to control the display means so that the production display becomes such that contents of the scenario progress according to a stop timing of the variation display.

4. A game machine according to claim 1 or 2, wherein said control means is constituted to·control the display means so that the production display becomes such that contents of the scenario progress irrespective of a stop timing of the variation display.

5. A game machine according to claim 3, wherein the control means is constituted to change the production display to show an evolution of the contents of the scenario when a state of the game becomes a Reach state which indicates a shift to the special game state if the variation display stops one more special symbol at a specific stop arrangement.

6. A game machine according to claim 5, wherein the evolution of the contents of the scenario is indicated by changes in a background shown as the production display.

7. A game machine according to any one of claims 1 to 6, wherein a progress form of the scenario shown with the production display is different by a type of production designs or combination thereof.

8. A game machine according to any one of claims 1 to 7, wherein the production display suggests moving on to the special game state with a type of the production designs or with an appended design indicated as appended to the production designs.

9. A game machine according to any one of claims 1 to 8, wherein the display means is constituted with a display zone for the production display greater than a display zone for the variation display of the special symbol.

10. A game machine comprising:

a display means for displaying designs related to a game: and
a control means for controlling a display on the display means;
the control means is constituted to be adapted to perform a production display of producing a process from a beginning to an end of a scenario, and to control the display means to display that the game moves on to a special game state when the end of the scenario indicated with the production display becomes as specified.

11. A game machine readable recording medium recording a game program, wherein the game program gives the game machine a function of permitting a player to play a game by displaying a special symbol indicating a shift to a special game state if a variation display stops at a specific state, and a function of displaying a production from a beginning to an end of a scenario during a period from a start to a stop of the variation display.

12. A game machine comprising:

a display means for displaying game-related designs including a special symbol indicating a shift to a special game state if a variation display stops at a specific arrangement, and including a production design indicating a probability of shifting to the special game state; and
a control means for controlling a display on the display means;
the control means being constituted to control the display means performing a suggestion display of relationship between the production design and the probability of shifting to the special game state.

13. A game machine according to claim 12, wherein the suggestion display indicates which production design has a high probability of shifting to the special game state.

14. A game machine according to claim 12 or 13, wherein the suggestion display shows a design identical to the production design or one relating thereto.

15. A game machine according to any one of claims 12 to 14, wherein the suggestion display is performed with an animated image.

16. A game machine according to any one of claims 12 to 15, wherein the suggestion display is shown when the game is not played or when the variation display of the special symbol is not shown.

17. A game machine readable recording medium recording a game program, wherein the game program gives the game machine a function of permitting a player to play a game while displaying game-related designs including a special symbol indicating a shift to a special game state if a variation display stops at a specific arrangement and including a production design indicating a probability of shifting to the special game state, and a function of performing a suggestion display of relationship between the production design and the probability.

FIG. 1

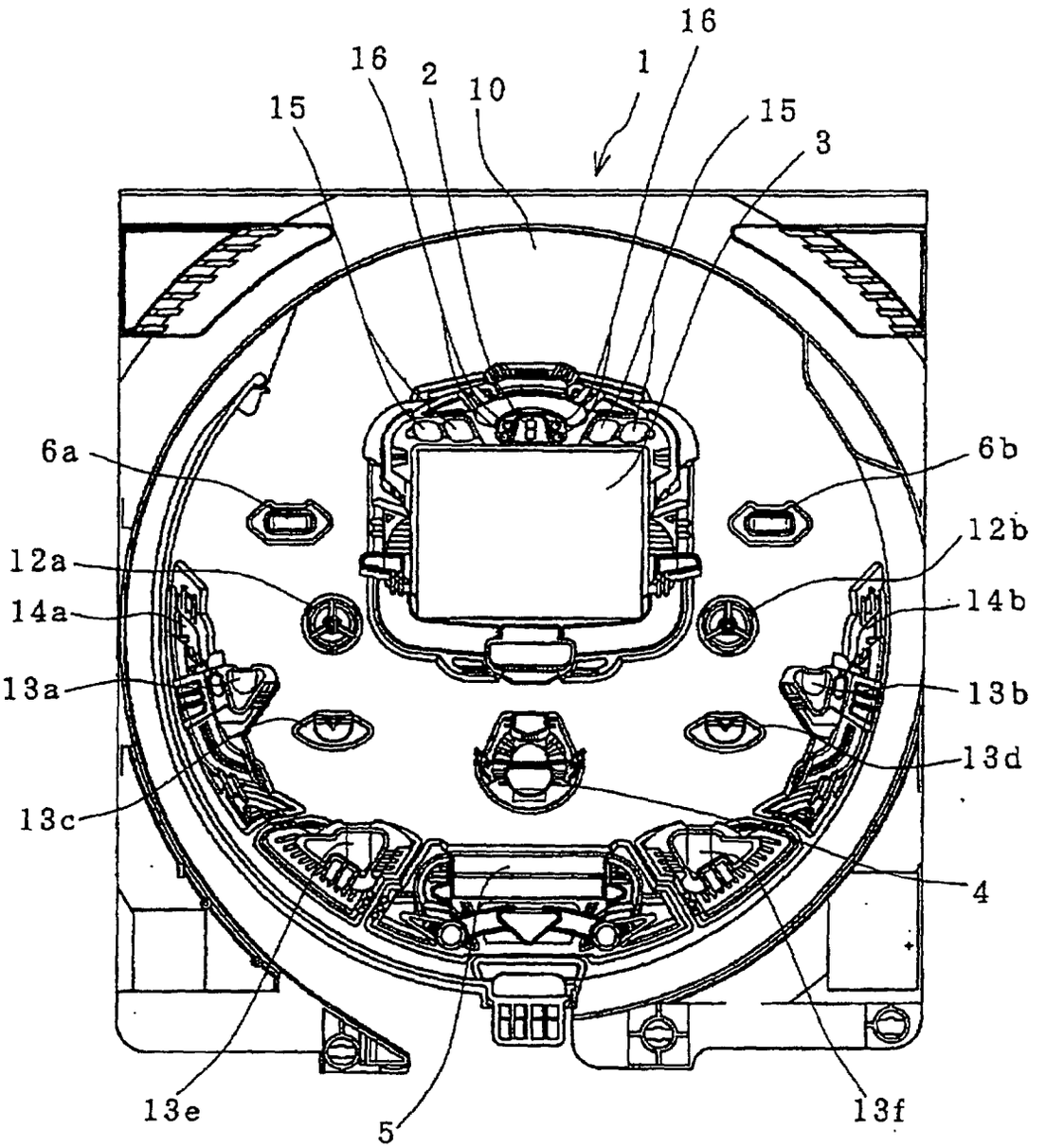

FIG. 2

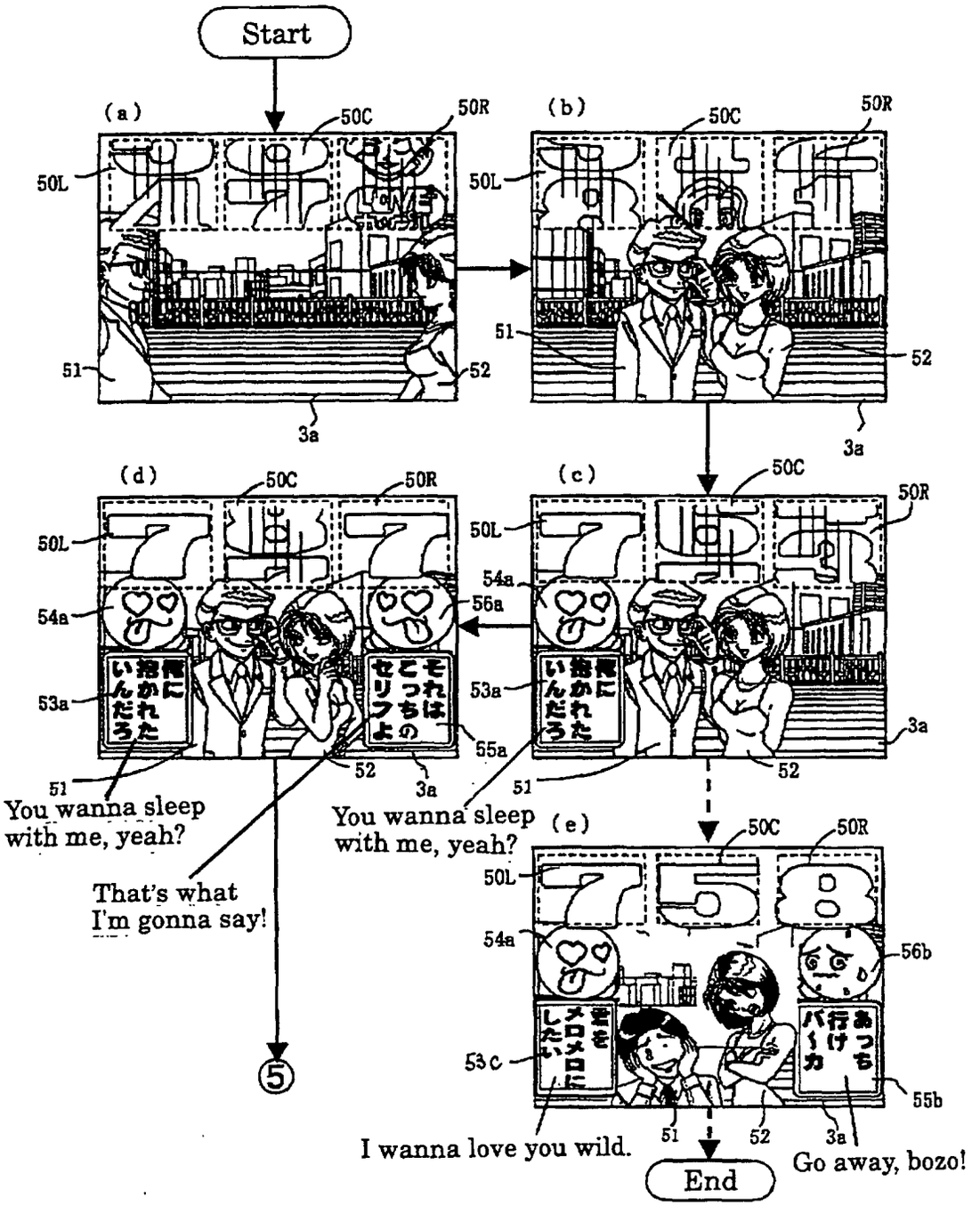
Start
(a)
(b)
(c)
(d)
(e)
50L
50C
50R
51
52
3a
54a
56a
53a
55a
56b
53c
55b
俺に抱かれたいんだろ
それはこっちのセリフよ
そそをメロメロにしたい
あっち行けバーカ
You wanna sleep with me, yeah?
That's what I'm gonna say!
I wanna love you wild.
Go away, bozo!
⑤
End

FIG. 3

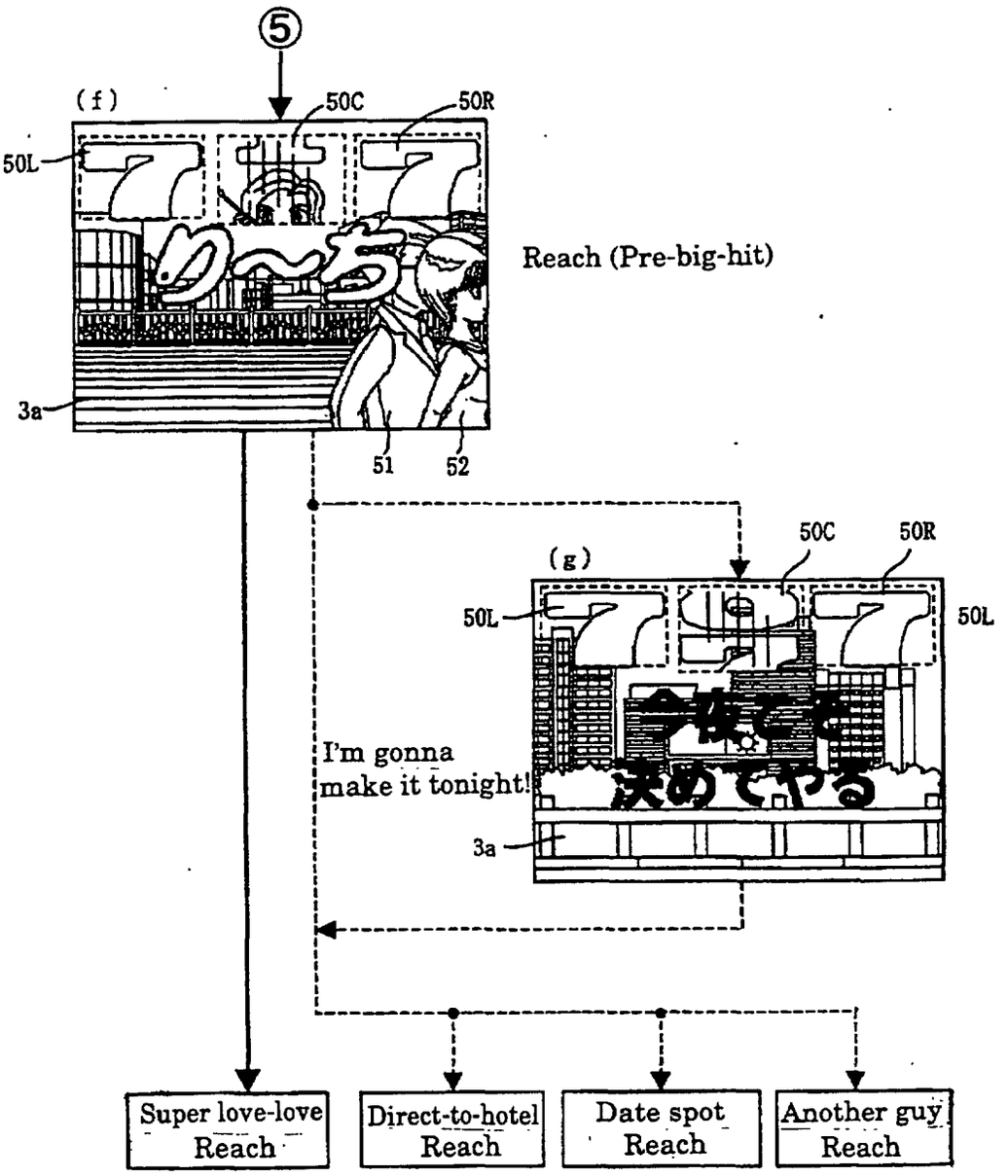
⑤
(f)
50C
50R
50L
Reach (Pre-big-hit)
3a
51
52
(g)
50C
50R
50L
50L
I'm gonna
make it tonight!
3a
Super love-love Reach
Direct-to-hotel Reach
Date spot Reach
Another guy Reach

FIG. 4

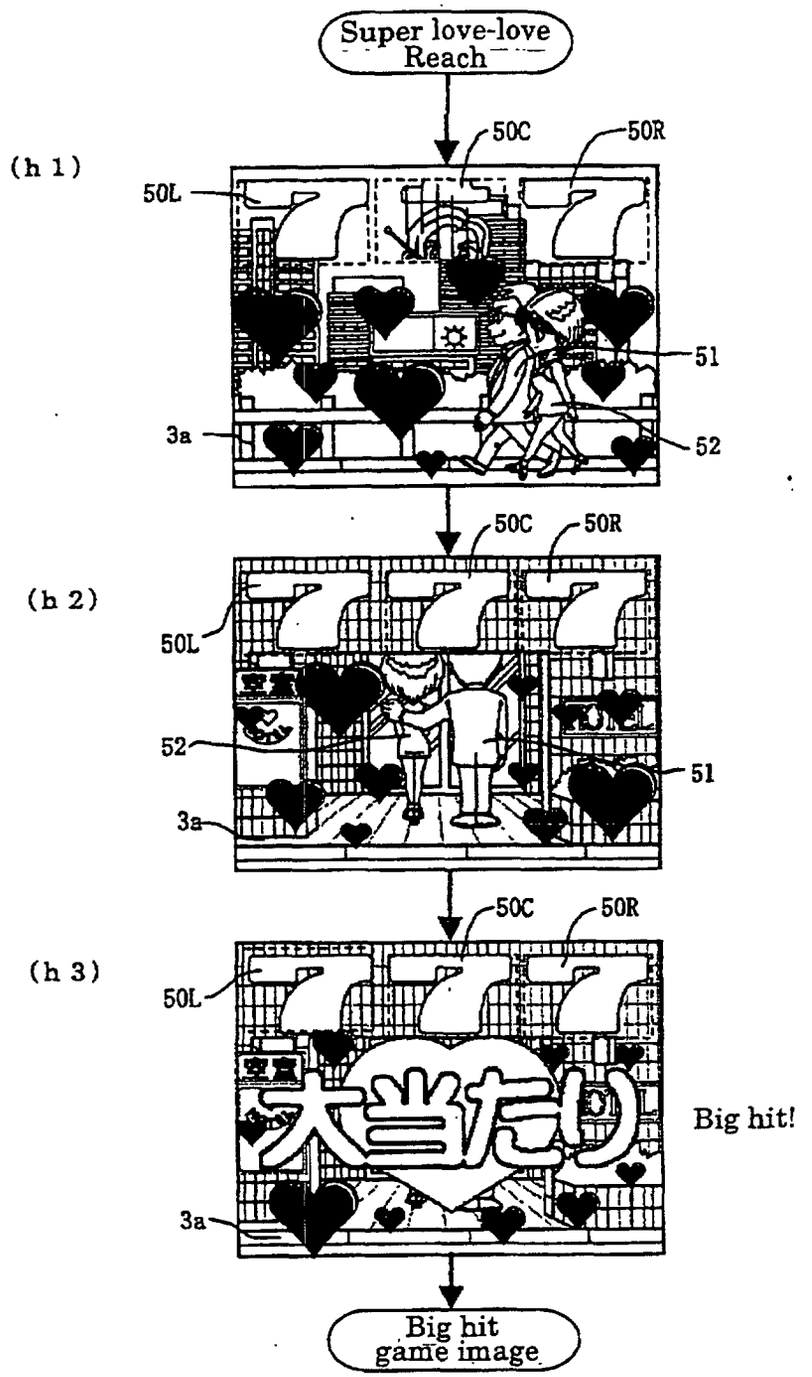
Super love-love Reach
(h 1)
50C
50R
50L
51
3a
52
(h 2)
50C
50R
50L
52
51
3a
(h 3)
50C
50R
50L
大当たり
Big hit!
3a
Big hit game image

FIG. 5

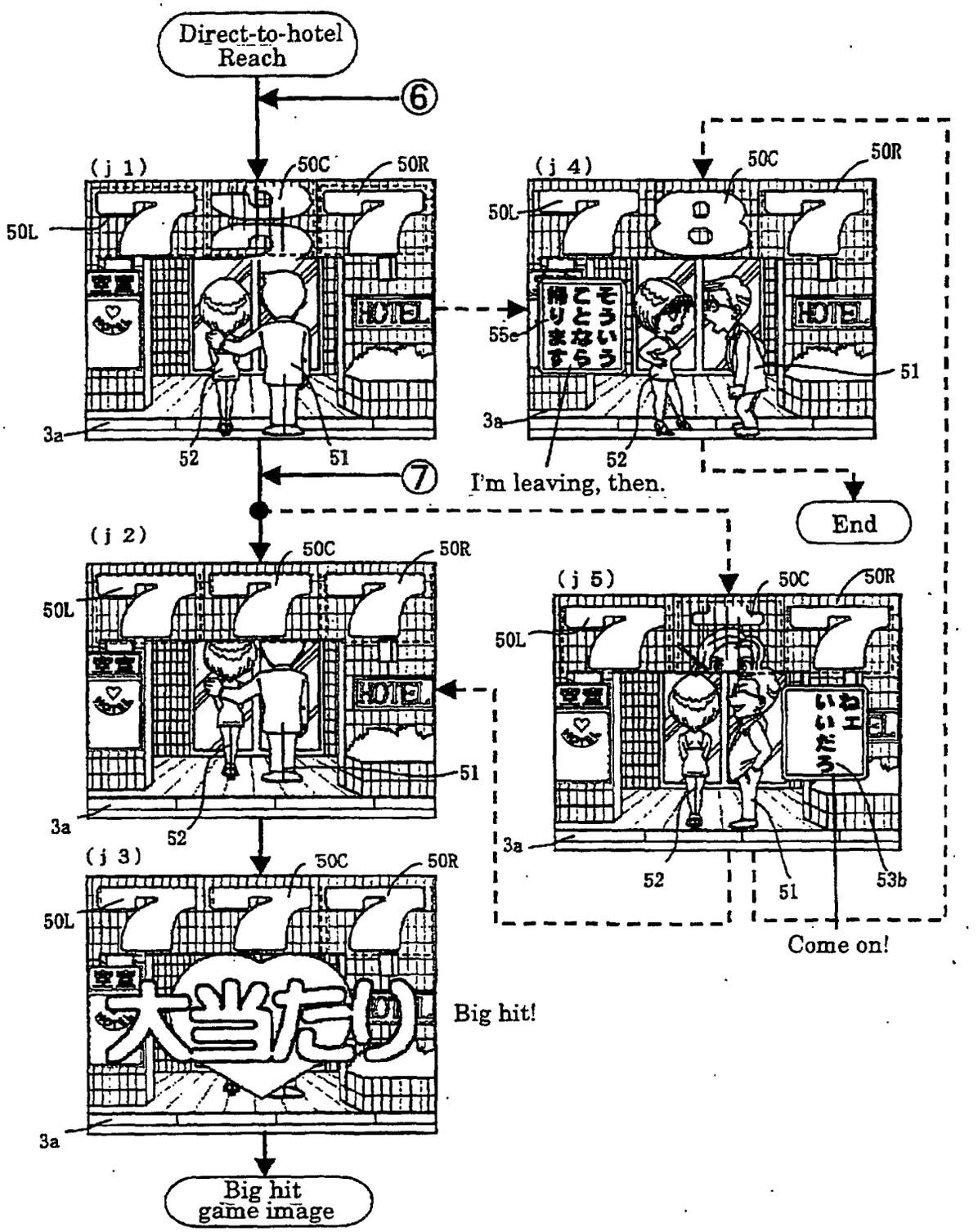
Direct-to-hotel Reach
⑥
(j 1)
50C
50R
50L
空室
HOTEL
3a
52
51
⑦
(j 4)
50C
50R
50L
そういうことならまないすらう
55e
HOTEL
51
3a
52
I'm leaving, then.
End
(j 2)
50C
50R
50L
空室
HOTEL
51
3a
52
(j 5)
50C
50R
50L
空室
ねエいいだろ
3a
52
51
53b
Come on!
(j 3)
50C
50R
50L
空室
大当たり
Big hit!
3a
Big hit game image

FIG. 6

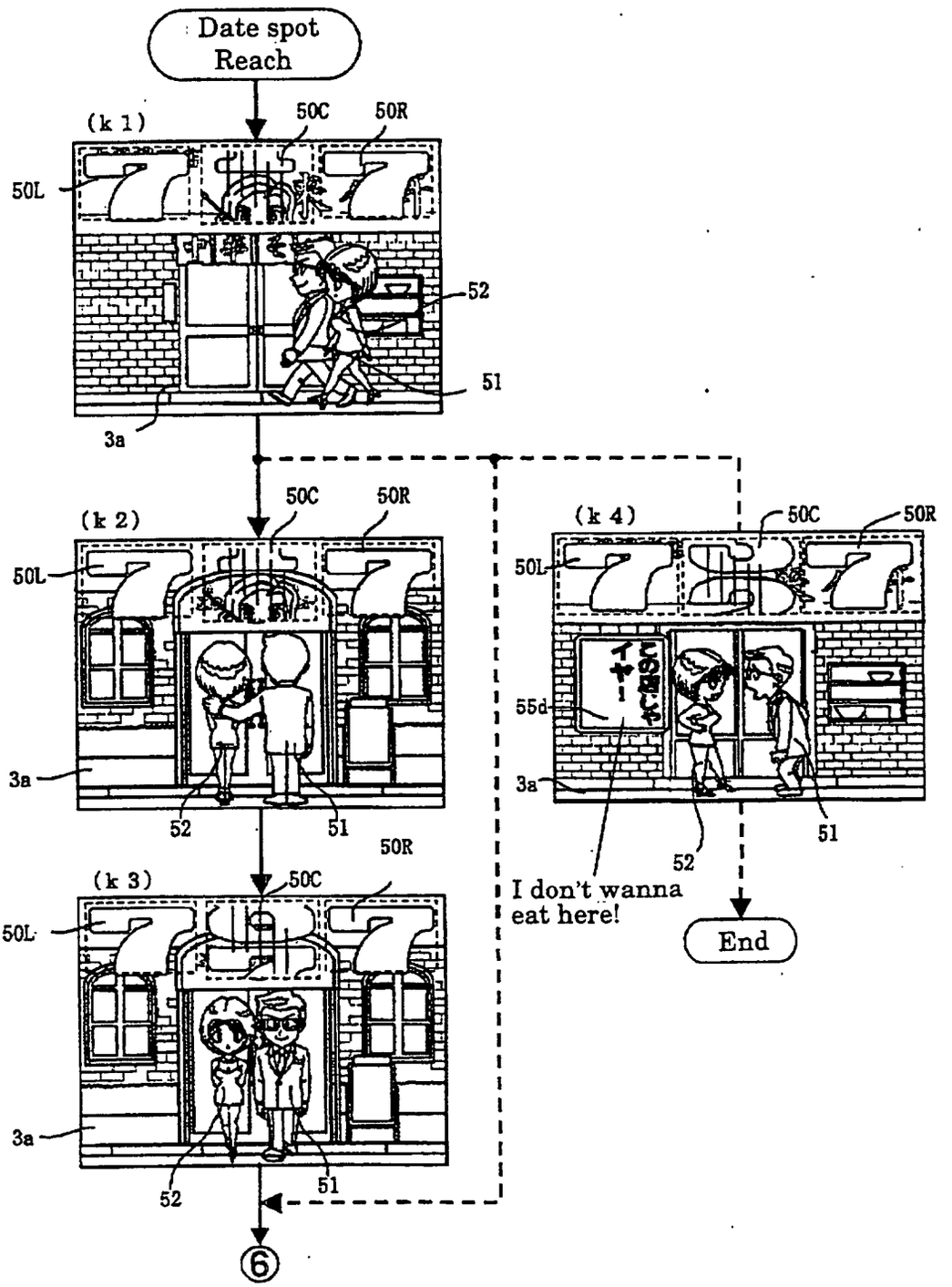
Date spot Reach
(k 1)
50C
50R
50L
52
51
3a
(k 2)
50C
50R
50L
3a
52
51
(k 3)
50R
50C
50L
3a
52
51
(k 4)
50C
50R
50L
55d
3a
52
51
I don't wanna eat here!
End
⑥

FIG. 7

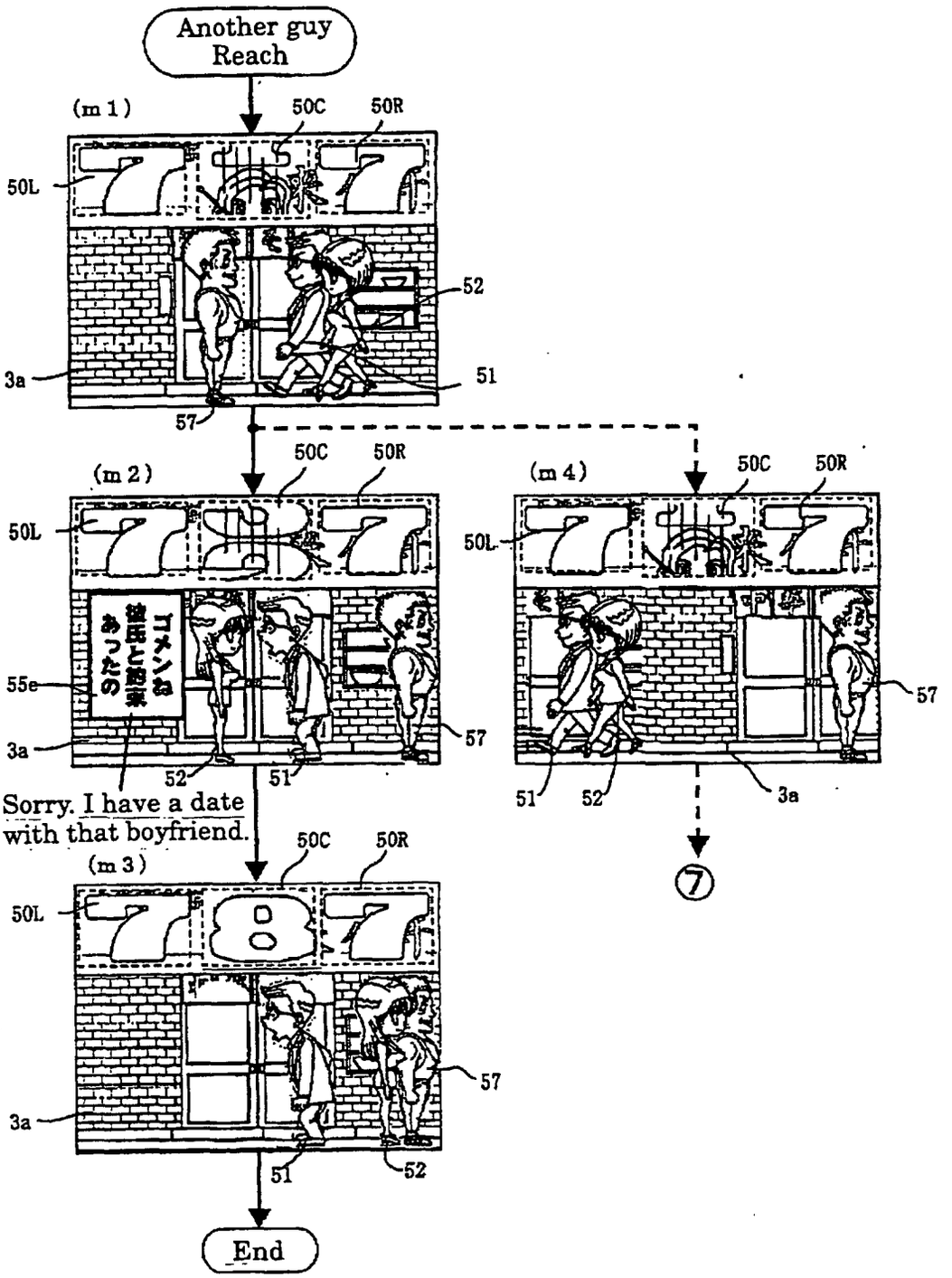
Another guy
Reach
(m 1)
50C
50R
50L
52
3a
51
57
(m 2)
50C
50R
50L
ゴメンね
彼氏と約束
あったの
55e
3a
57
52
51
Sorry. I have a date
with that boyfriend.
(m 3)
50C
50R
50L
3a
57
51
52
End
(m 4)
50C
50R
50L
57
51
52
3a
⑦

FIG. 8

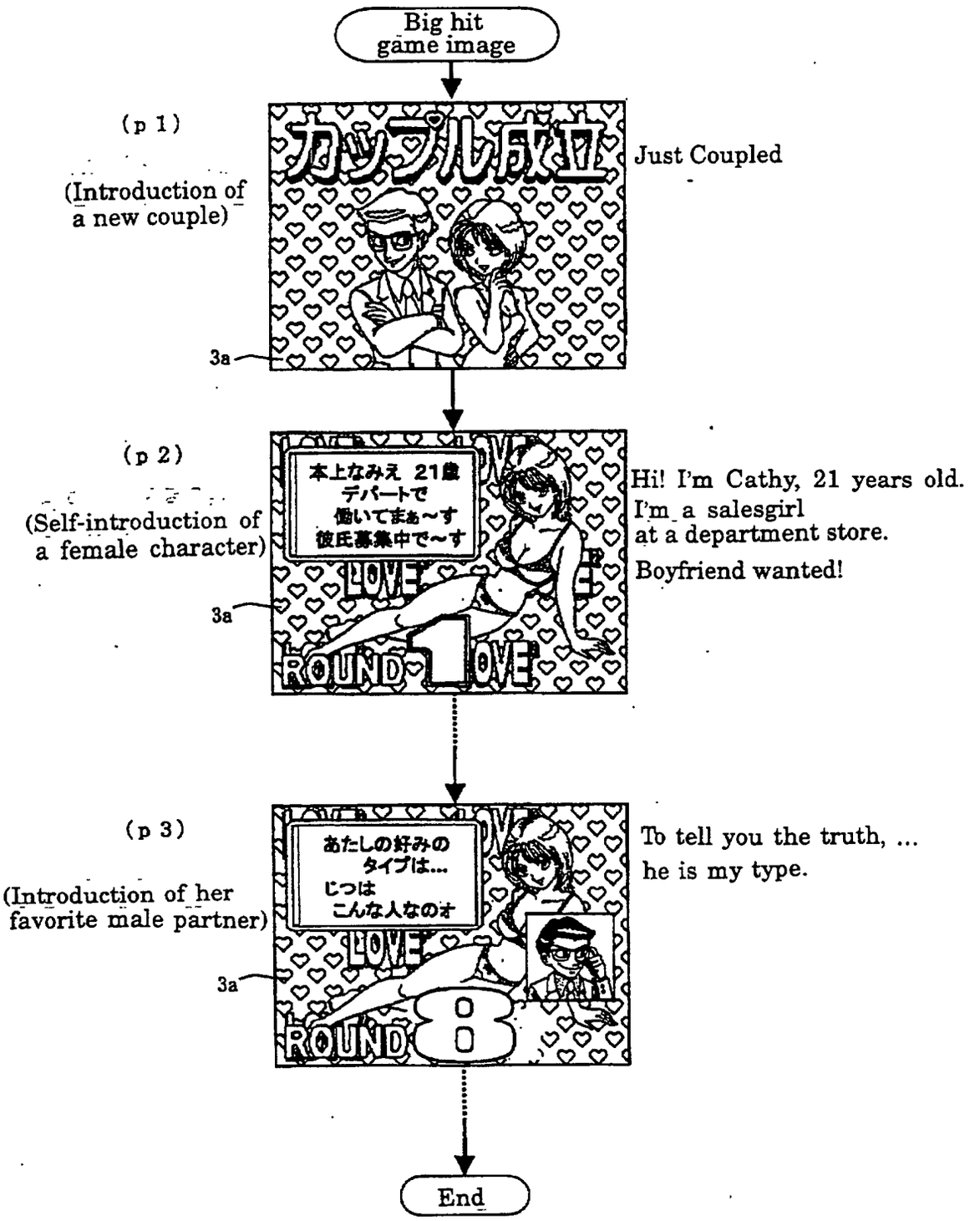
Big hit game image
(p 1)
(Introduction of a new couple)
カップル成立
Just Coupled
3a
(p 2)
(Self-introduction of a female character)
本上なみえ 21歳
デパートで
働いてまぁ～す
彼氏募集中で～す
LOVE
ROUND 1
Hi! I'm Cathy, 21 years old.
I'm a salesgirl
at a department store.
Boyfriend wanted!
3a
(p 3)
(Introduction of her favorite male partner)
あたしの好みの
タイプは...
じつは
こんな人なのォ
LOVE
ROUND 8
To tell you the truth, ...
he is my type.
3a
End

FIG. 9

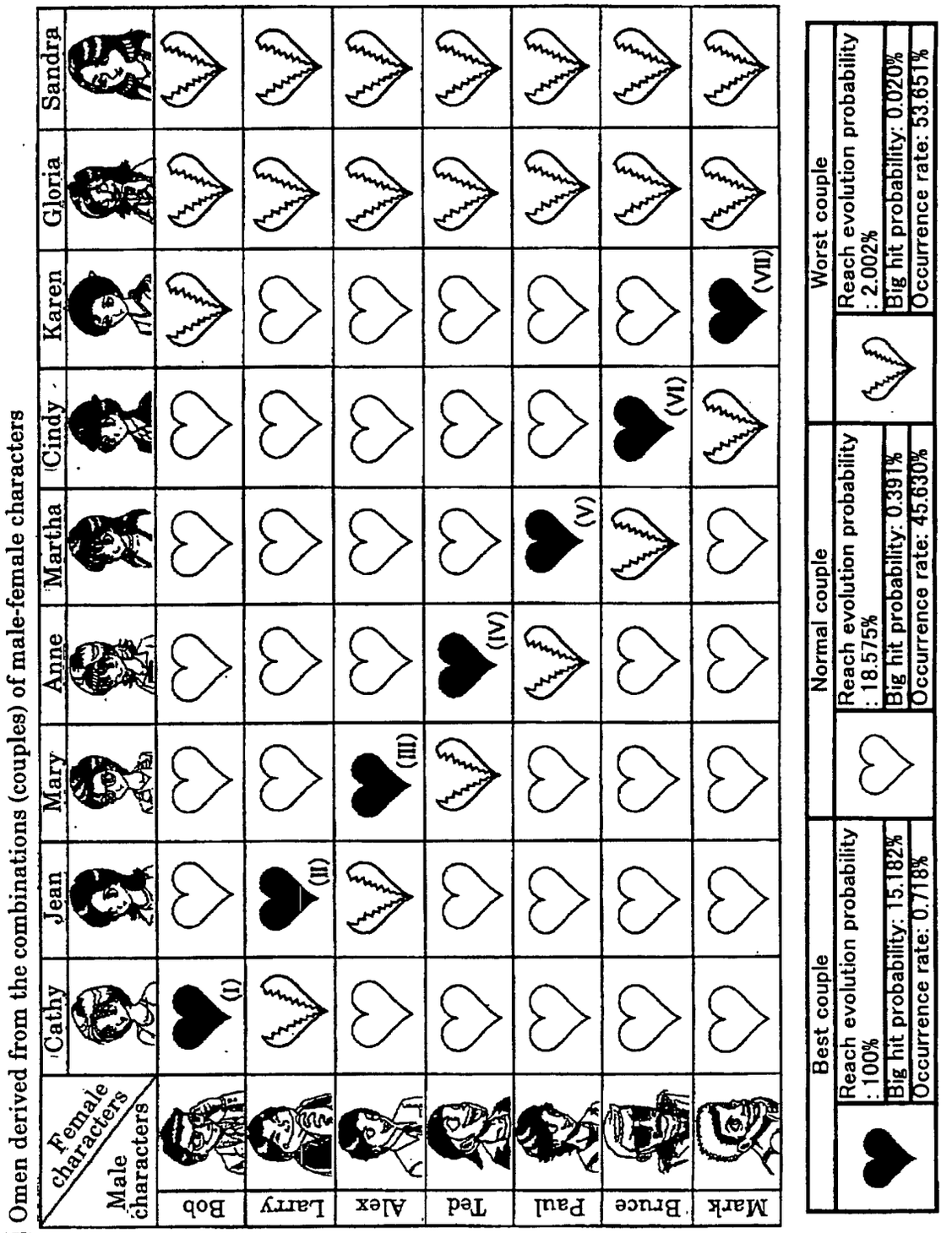
Omen derived from the combinations (couples) of male-female characters
Female characters
Male characters
Cathy
Jean
Mary
Anne
Martha
Cindy
Karen
Gloria
Sandra
Bob
Larry
Alex
Ted
Paul
Bruce
Mark
(I)
(II)
(III)
(IV)
(V)
(VI)
(VII)
Best couple
Reach evolution probability : 100%
Big hit probability: 15.182%
Occurrence rate: 0.718%
Normal couple
Reach evolution probability : 18.575%
Big hit probability: 0.391%
Occurrence rate: 45.630%
Worst couple
Reach evolution probability : 2.002%
Big hit probability: 0.020%
Occurrence rate: 53.651%

FIG. 10

Scene with the background of "station plaza"

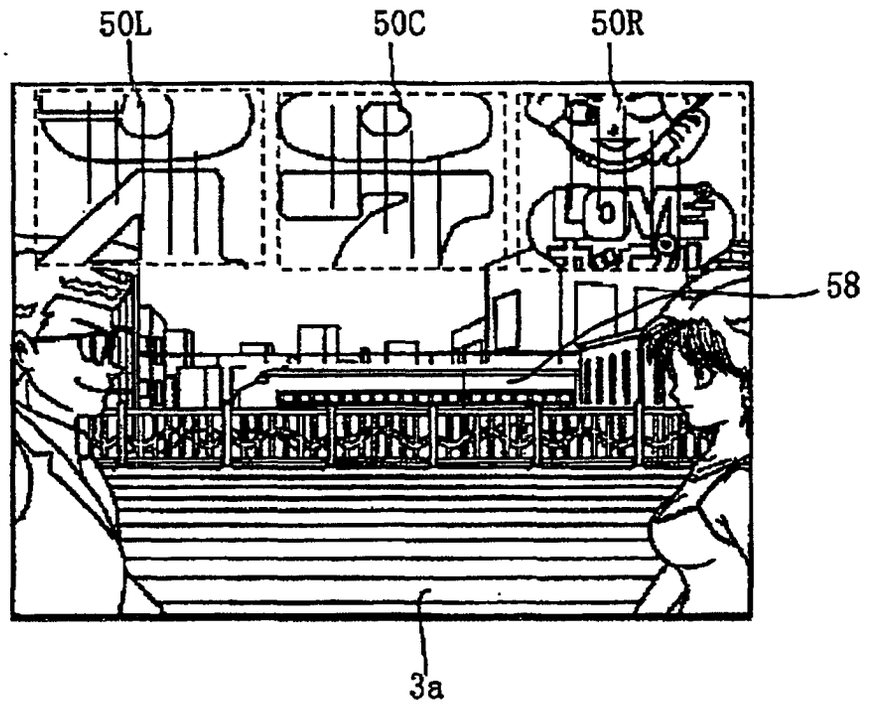

FIG. 11

Scene with the background of "seaside park"

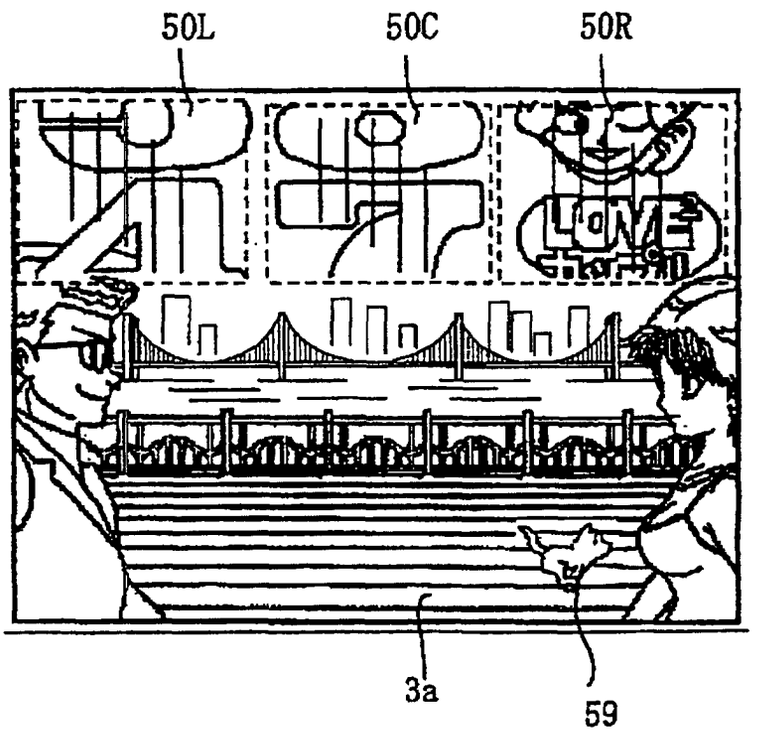

FIG. 12

Overview table of real intention designs

H1	H2	H3	H4
			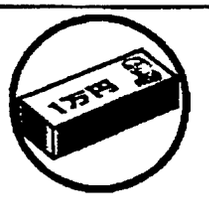
H5	H6	H7	H8
			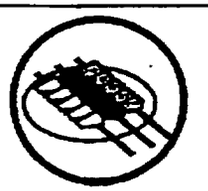
H9	H10	H11	H12
H13	H14	H15	H16
			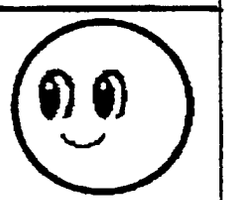
H17	H18	H19	H20

FIG. 13

Omen derived from the combinations of real intention designs

Combinations of real intention images	Omen rank		
	Love-love rank Occurrence rate: 7.35% Big hit probability: 2.47%	Date rank Occurrence rate: 23.60% Big hit probability: 0.28%	No-way rank Occurrence rate: 69.05% Big hit probability: 0.07%
1	H1 + H1	H3 + H16	H2 + H17
2	H6 + H6	H10 + H16	H2 + H18
3	H14 + H14	H16 + H7	H2 + H19
4	H15 + H15	H16 + H4	H3 + H17
5	H2 + H14	H8 + H11	H3 + H18
6	H3 + H15	H9 + H6	H14 + H19
7	H16 + H1	H10 + H10	H9 + H12
8	H14 + H4	H9 + H9	H13 + H8
9	H15 + H5	H11 + H11	H6 + H7
10	H1 + H16	H12 + H12	H12 + H9
		H13 + H13	H4 + H20
		H9 + H16	H3 + H20
		H11 + H16	H2 + H20
		H12 + H16	H18 + H14
			H17 + H15
			H17 + H5

FIG. 14

Best couples

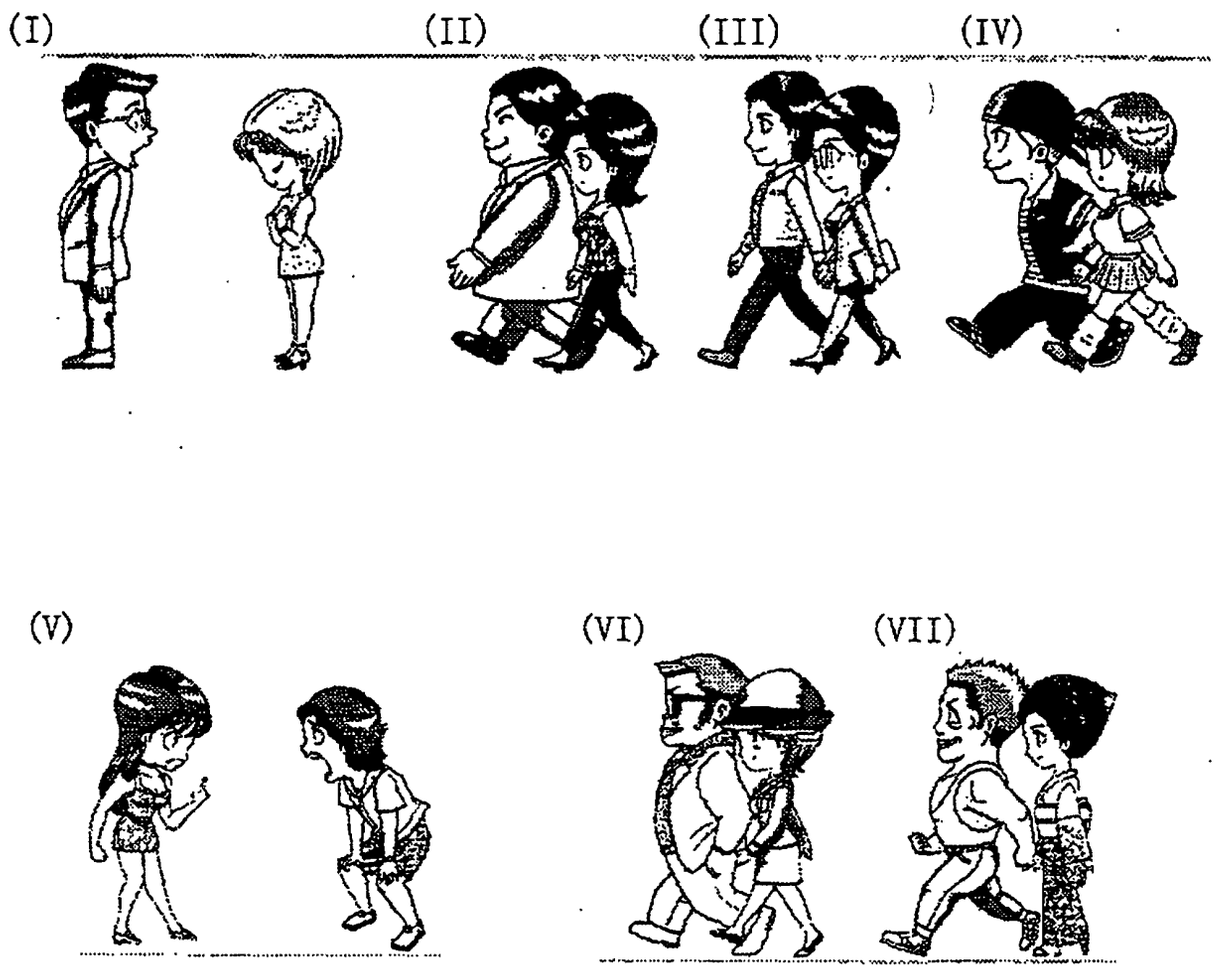

FIG. 15

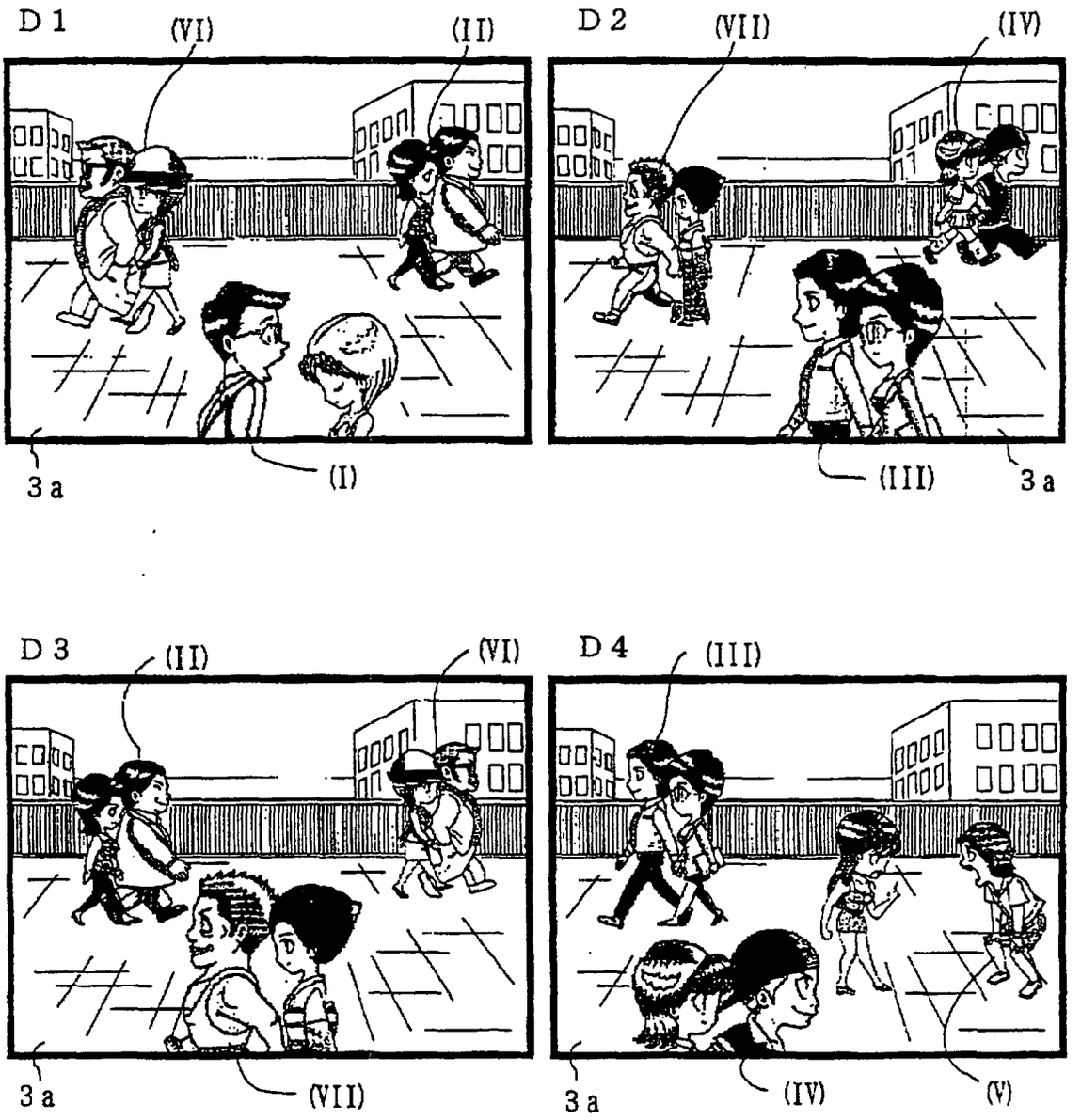

FIG. 16

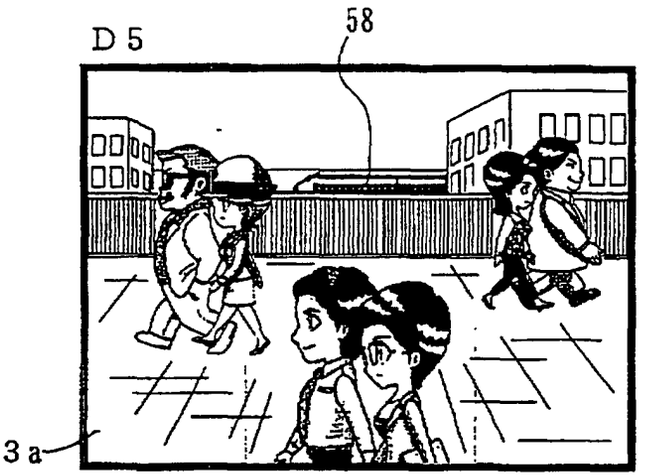

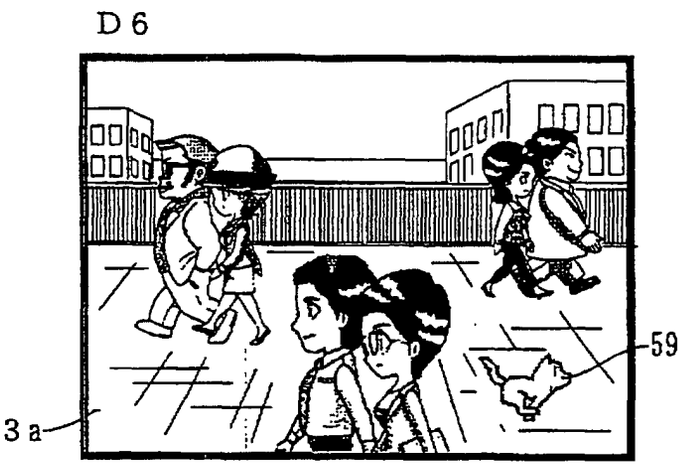

FIG. 17

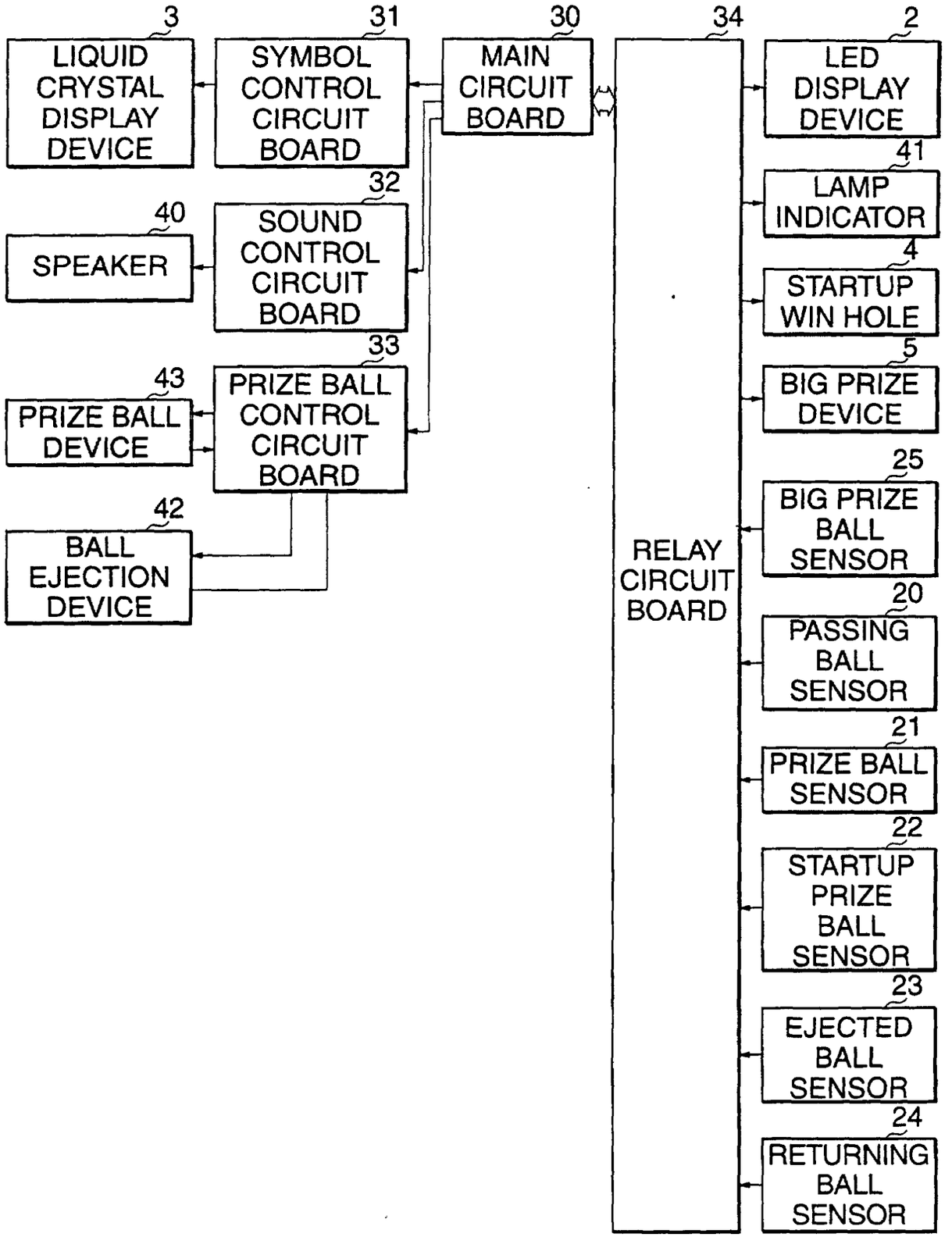
3
LIQUID CRYSTAL DISPLAY DEVICE
31
SYMBOL CONTROL CIRCUIT BOARD
30
MAIN CIRCUIT BOARD
34
RELAY CIRCUIT BOARD
2
LED DISPLAY DEVICE
41
LAMP INDICATOR
4
STARTUP WIN HOLE
5
BIG PRIZE DEVICE
25
BIG PRIZE BALL SENSOR
20
PASSING BALL SENSOR
21
PRIZE BALL SENSOR
22
STARTUP PRIZE BALL SENSOR
23
EJECTED BALL SENSOR
24
RETURNING BALL SENSOR
32
SOUND CONTROL CIRCUIT BOARD
40
SPEAKER
33
PRIZE BALL CONTROL CIRCUIT BOARD
43
PRIZE BALL DEVICE
42
BALL EJECTION DEVICE

FIG. 18

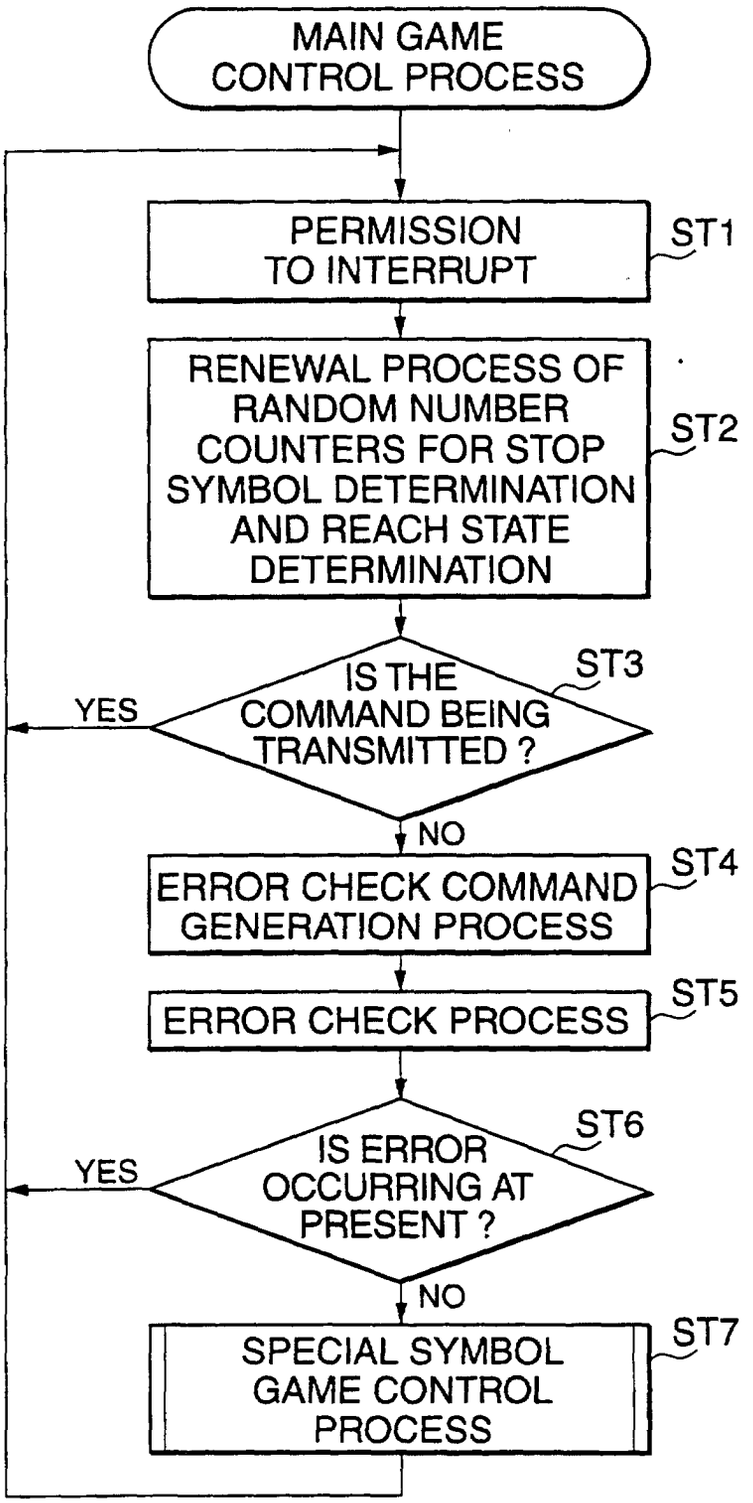
MAIN GAME CONTROL PROCESS
PERMISSION TO INTERRUPT
ST1
RENEWAL PROCESS OF RANDOM NUMBER COUNTERS FOR STOP SYMBOL DETERMINATION AND REACH STATE DETERMINATION
ST2
IS THE COMMAND BEING TRANSMITTED ?
ST3
YES
NO
ERROR CHECK COMMAND GENERATION PROCESS
ST4
ERROR CHECK PROCESS
ST5
IS ERROR OCCURRING AT PRESENT ?
ST6
YES
NO
SPECIAL SYMBOL GAME CONTROL PROCESS
ST7

FIG. 19

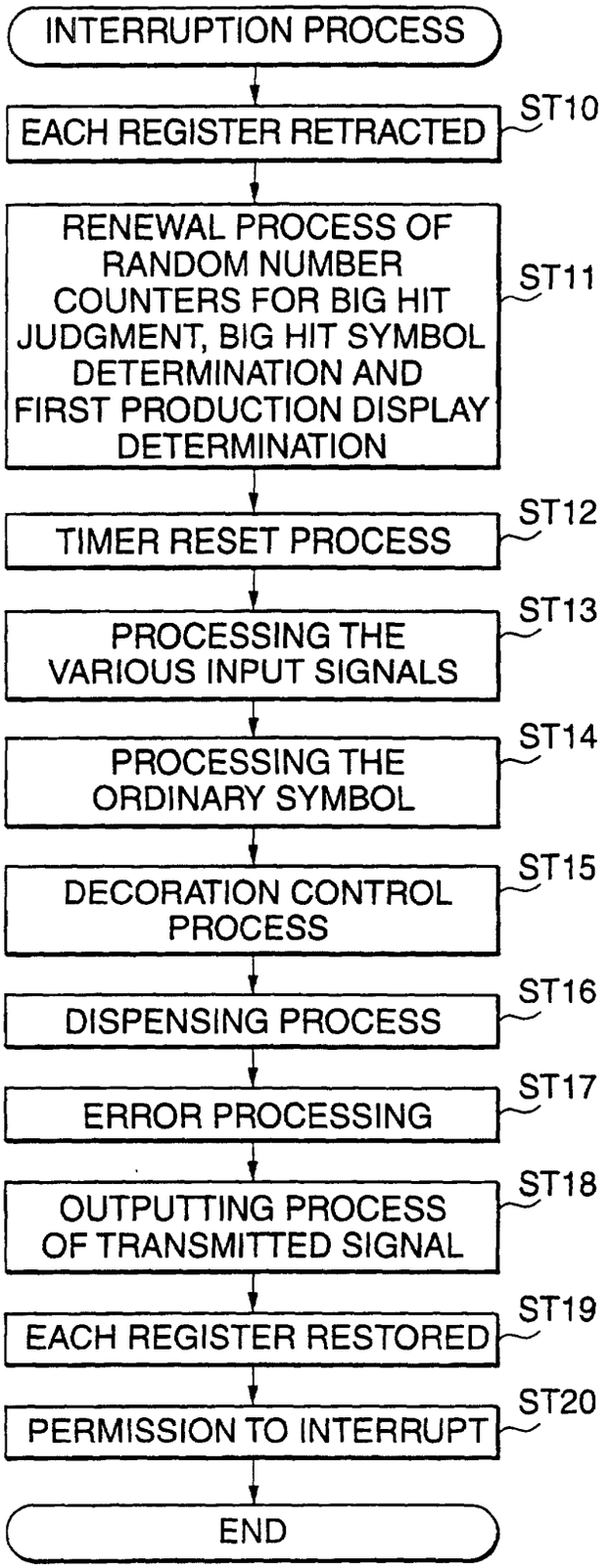
INTERRUPTION PROCESS
EACH REGISTER RETRACTED
ST10
RENEWAL PROCESS OF RANDOM NUMBER COUNTERS FOR BIG HIT JUDGMENT, BIG HIT SYMBOL DETERMINATION AND FIRST PRODUCTION DISPLAY DETERMINATION
ST11
TIMER RESET PROCESS
ST12
PROCESSING THE VARIOUS INPUT SIGNALS
ST13
PROCESSING THE ORDINARY SYMBOL
ST14
DECORATION CONTROL PROCESS
ST15
DISPENSING PROCESS
ST16
ERROR PROCESSING
ST17
OUTPUTTING PROCESS OF TRANSMITTED SIGNAL
ST18
EACH REGISTER RESTORED
ST19
PERMISSION TO INTERRUPT
ST20
END

FIG. 20

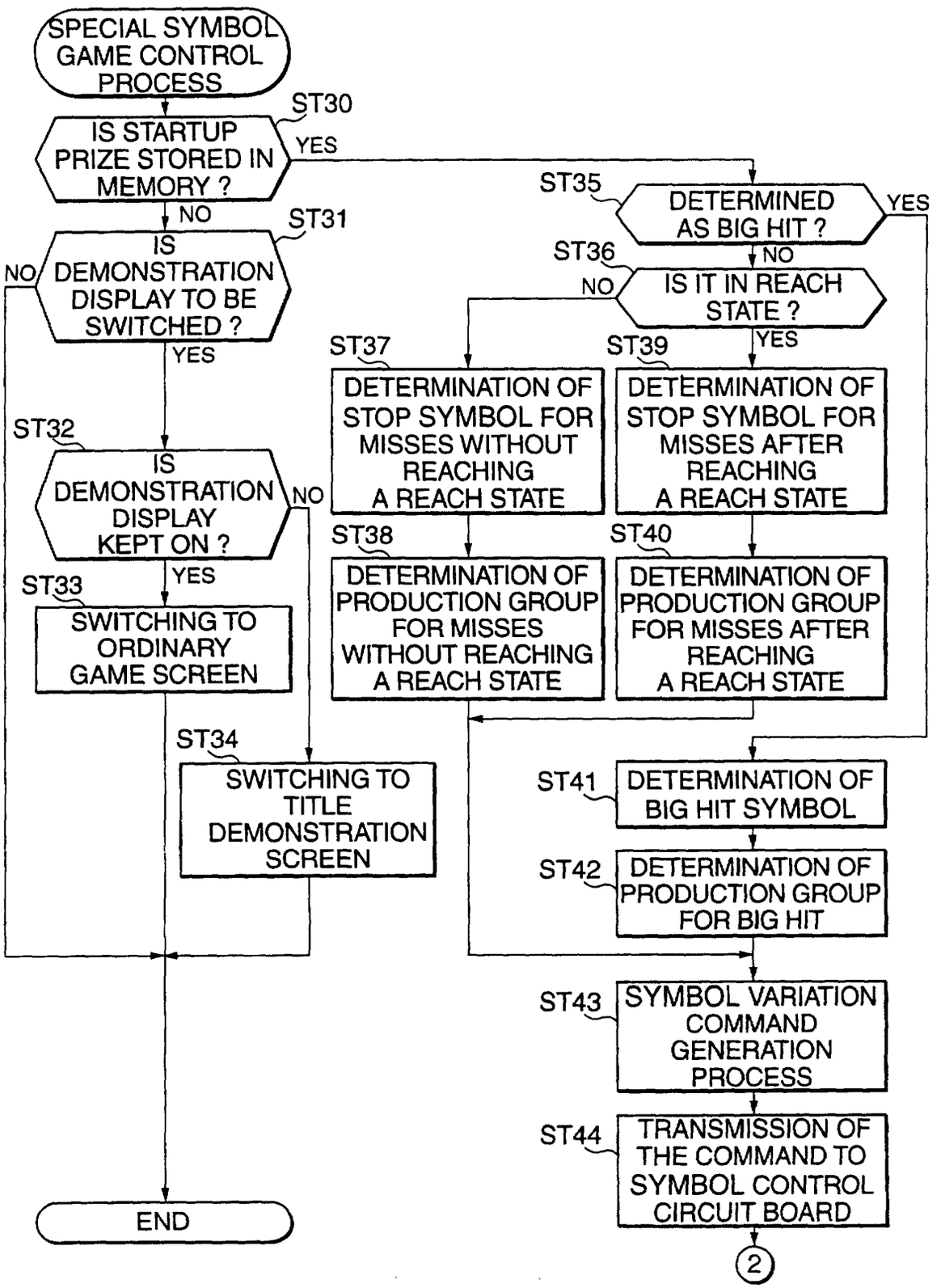
SPECIAL SYMBOL GAME CONTROL PROCESS
ST30
IS STARTUP PRIZE STORED IN MEMORY ?
YES
NO
ST31
IS DEMONSTRATION DISPLAY TO BE SWITCHED ?
NO
YES
ST32
IS DEMONSTRATION DISPLAY KEPT ON ?
NO
YES
ST33
SWITCHING TO ORDINARY GAME SCREEN
ST34
SWITCHING TO TITLE DEMONSTRATION SCREEN
END
ST35
DETERMINED AS BIG HIT ?
YES
NO
ST36
IS IT IN REACH STATE ?
NO
YES
ST37
DETERMINATION OF STOP SYMBOL FOR MISSES WITHOUT REACHING A REACH STATE
ST38
DETERMINATION OF PRODUCTION GROUP FOR MISSES WITHOUT REACHING A REACH STATE
ST39
DETERMINATION OF STOP SYMBOL FOR MISSES AFTER REACHING A REACH STATE
ST40
DETERMINATION OF PRODUCTION GROUP FOR MISSES AFTER REACHING A REACH STATE
ST41
DETERMINATION OF BIG HIT SYMBOL
ST42
DETERMINATION OF PRODUCTION GROUP FOR BIG HIT
ST43
SYMBOL VARIATION COMMAND GENERATION PROCESS
ST44
TRANSMISSION OF THE COMMAND TO SYMBOL CONTROL CIRCUIT BOARD
2

FIG. 21

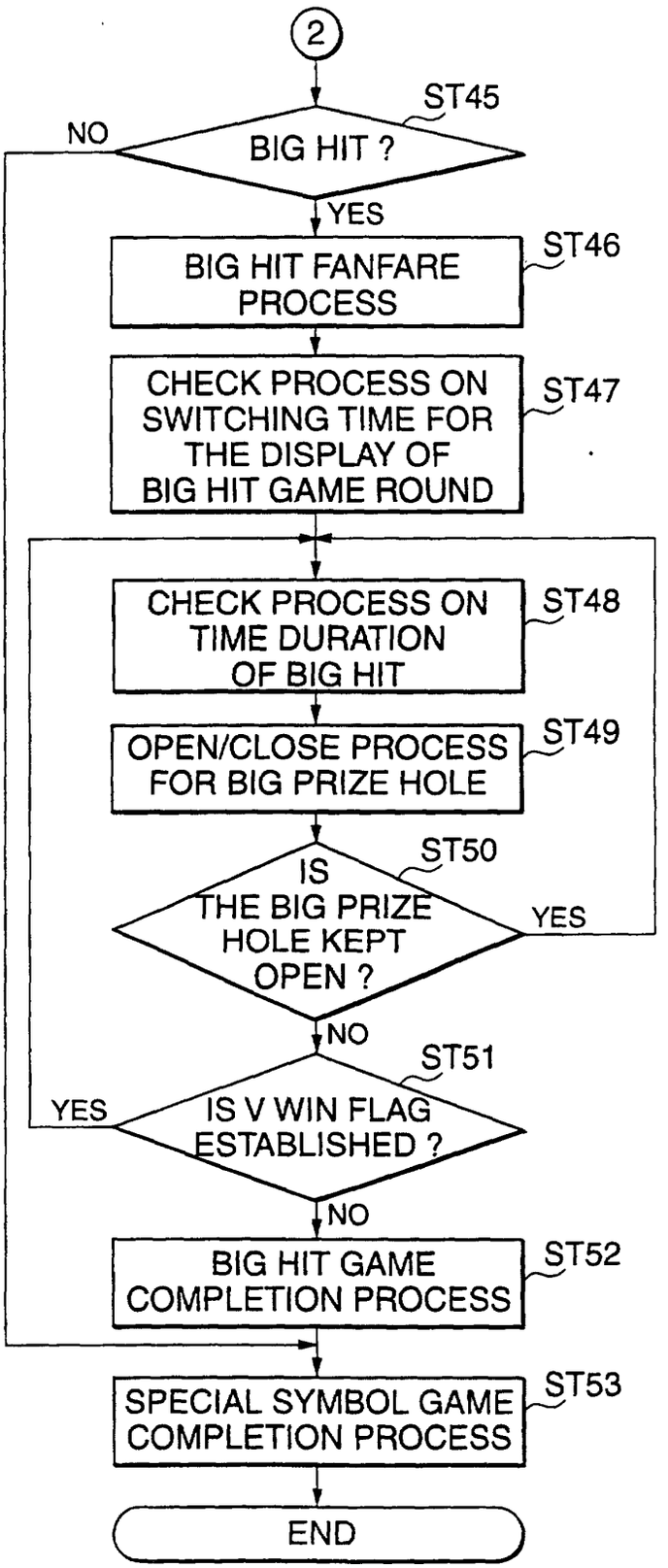
2
ST45
BIG HIT ?
NO
YES
BIG HIT FANFARE PROCESS
ST46
CHECK PROCESS ON SWITCHING TIME FOR THE DISPLAY OF BIG HIT GAME ROUND
ST47
CHECK PROCESS ON TIME DURATION OF BIG HIT
ST48
OPEN/CLOSE PROCESS FOR BIG PRIZE HOLE
ST49
IS THE BIG PRIZE HOLE KEPT OPEN ?
ST50
YES
NO
IS V WIN FLAG ESTABLISHED ?
ST51
YES
NO
BIG HIT GAME COMPLETION PROCESS
ST52
SPECIAL SYMBOL GAME COMPLETION PROCESS
ST53
END

FIG. 22

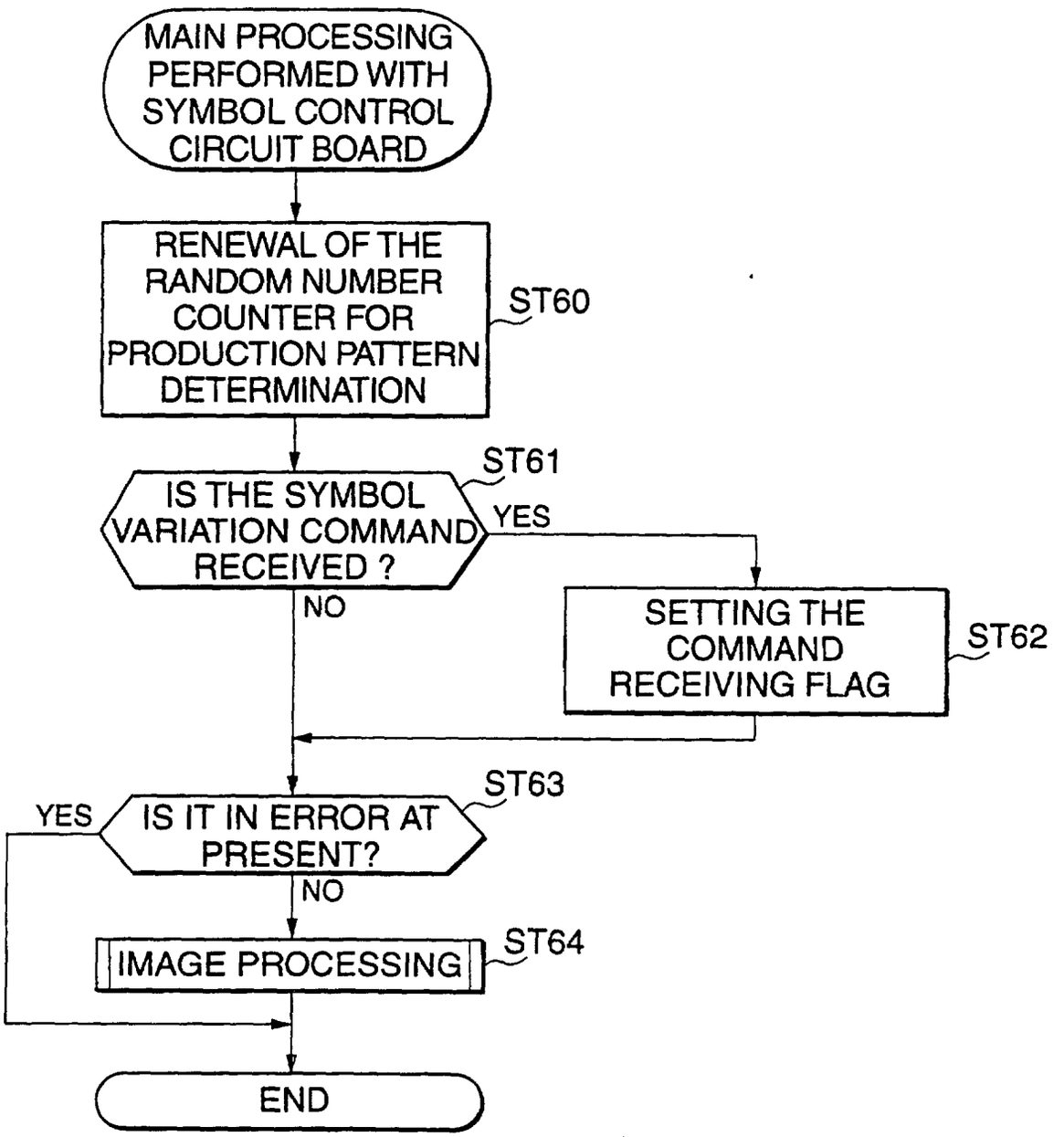
MAIN PROCESSING PERFORMED WITH SYMBOL CONTROL CIRCUIT BOARD
RENEWAL OF THE RANDOM NUMBER COUNTER FOR PRODUCTION PATTERN DETERMINATION
ST60
IS THE SYMBOL VARIATION COMMAND RECEIVED ?
ST61
YES
NO
SETTING THE COMMAND RECEIVING FLAG
ST62
IS IT IN ERROR AT PRESENT?
ST63
YES
NO
IMAGE PROCESSING
ST64
END

FIG. 23

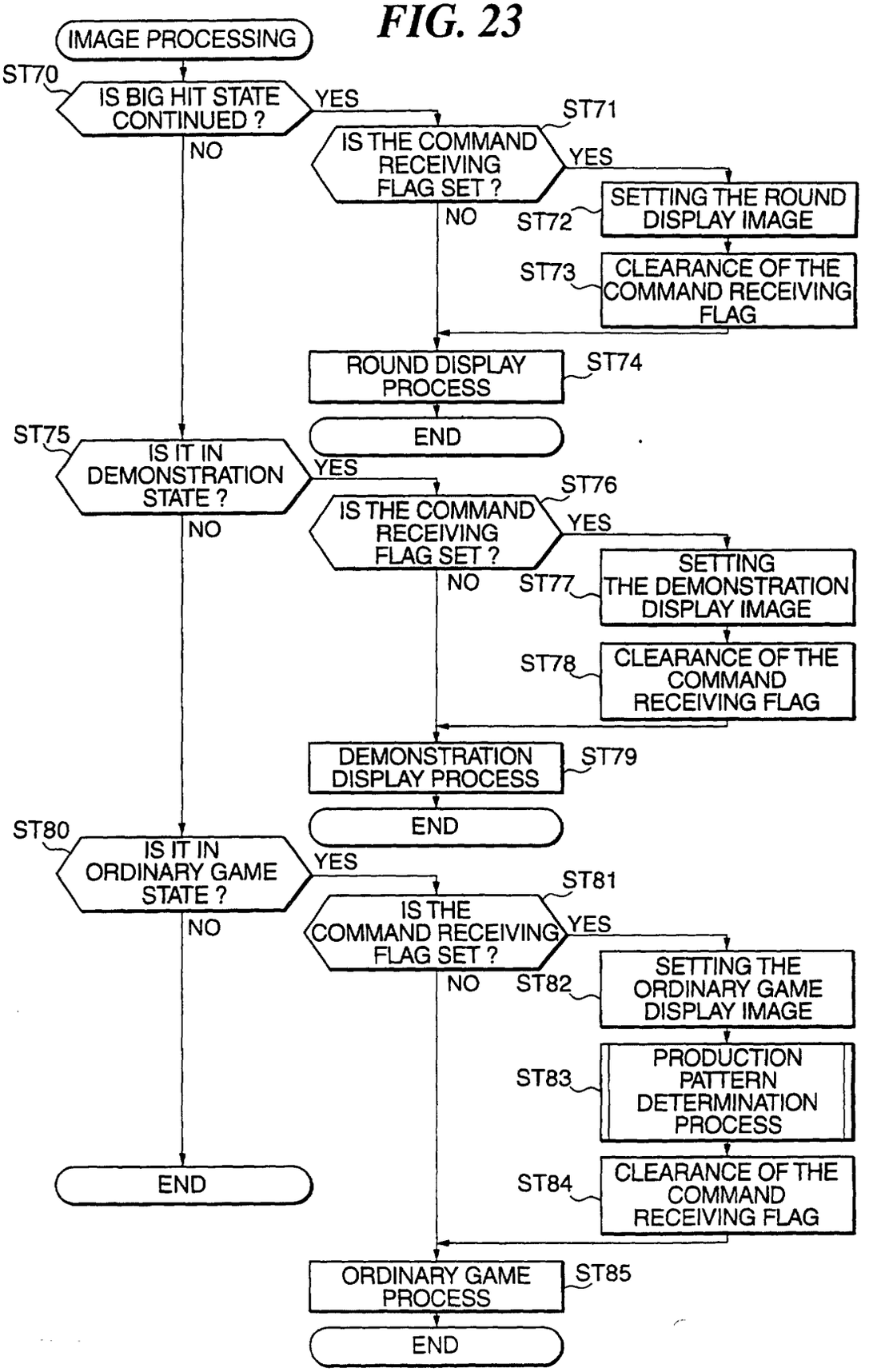
IMAGE PROCESSING
ST70
IS BIG HIT STATE CONTINUED ?
YES
NO
ST71
IS THE COMMAND RECEIVING FLAG SET ?
YES
NO
ST72
SETTING THE ROUND DISPLAY IMAGE
ST73
CLEARANCE OF THE COMMAND RECEIVING FLAG
ROUND DISPLAY PROCESS
ST74
END
ST75
IS IT IN DEMONSTRATION STATE ?
YES
NO
ST76
IS THE COMMAND RECEIVING FLAG SET ?
YES
NO
ST77
SETTING THE DEMONSTRATION DISPLAY IMAGE
ST78
CLEARANCE OF THE COMMAND RECEIVING FLAG
DEMONSTRATION DISPLAY PROCESS
ST79
END
ST80
IS IT IN ORDINARY GAME STATE ?
YES
NO
ST81
IS THE COMMAND RECEIVING FLAG SET ?
YES
NO
ST82
SETTING THE ORDINARY GAME DISPLAY IMAGE
ST83
PRODUCTION PATTERN DETERMINATION PROCESS
ST84
CLEARANCE OF THE COMMAND RECEIVING FLAG
END
ORDINARY GAME PROCESS
ST85
END

FIG. 24

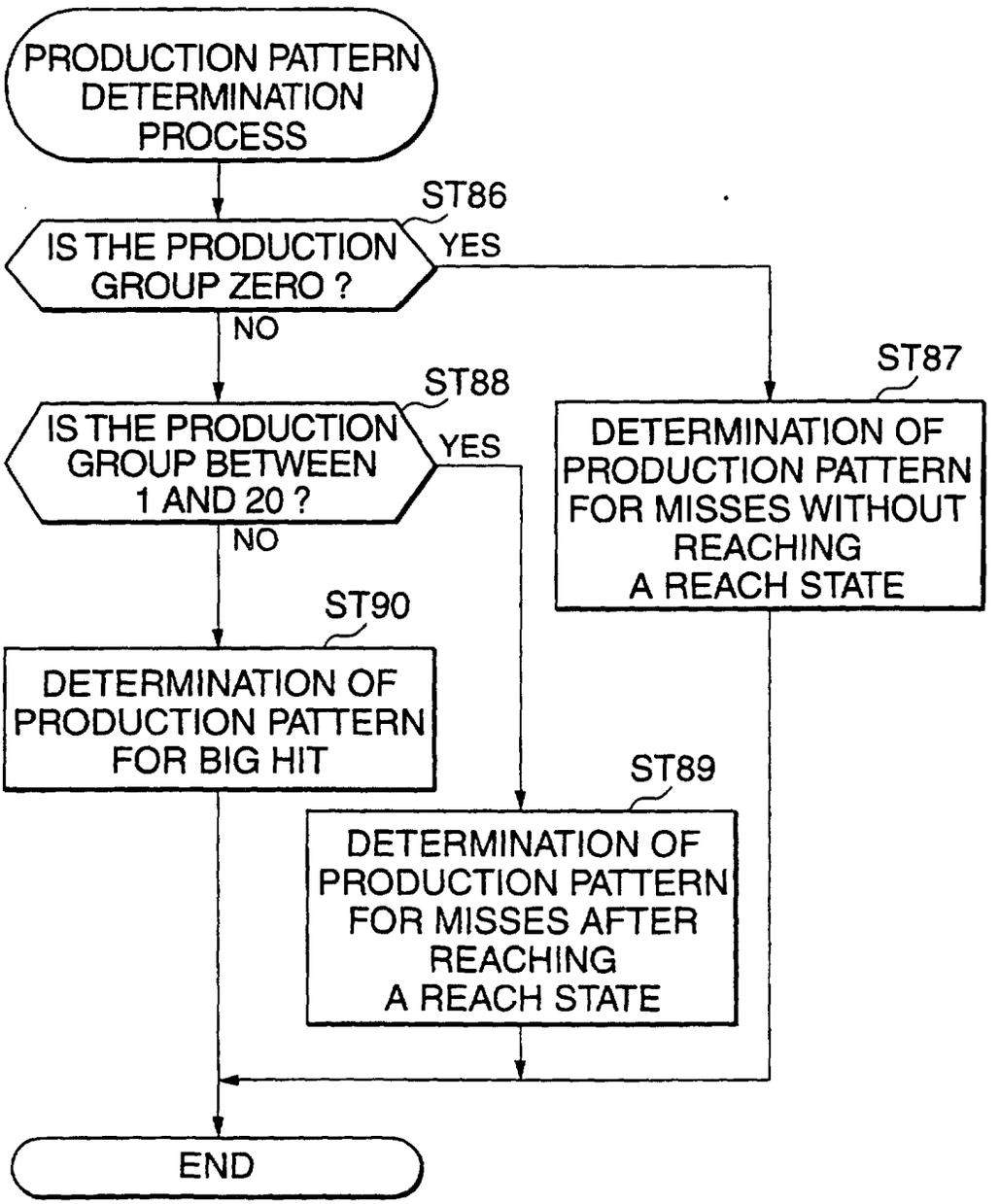
PRODUCTION PATTERN DETERMINATION PROCESS
ST86
IS THE PRODUCTION GROUP ZERO ?
YES
NO
ST87
DETERMINATION OF PRODUCTION PATTERN FOR MISSES WITHOUT REACHING A REACH STATE
ST88
IS THE PRODUCTION GROUP BETWEEN 1 AND 20 ?
YES
NO
ST90
DETERMINATION OF PRODUCTION PATTERN FOR BIG HIT
ST89
DETERMINATION OF PRODUCTION PATTERN FOR MISSES AFTER REACHING A REACH STATE
END

FIG. 25

Counter type	Count value renewal range
Random number counter for big hit judgment	0 ～334
Random number counter for Reach judgment	0 ～9
Random number counter for big hit symbol determination	0 ～11
Random number counter for production group determination	0 ～1023
Random number counter for left side stop symbol determination	0 ～11
Random number counter for central stop symbol determination	0 ～11
Random number counter for right side stop symbol determination	0 ～11
Random number counter for production pattern determination	0 ～127

FIG. 26

Big hit judgment table

Range of random number for big hit judgment	Items to be judged
7	Big hit
0～6, 8～324	Miss

FIG. 27

Range of random number for big hit symbol determination

Big hit symbol determination table

大当り図柄決定用乱数の範囲	Big hit symbol for selection
0	1 - 1 - 1
1	2 - 2 - 2
2	3 - 3 - 3
3	4 - 4 - 4
4	5 - 5 - 5
5	6 - 6 - 6
6	7 - 7 - 7
7	8 - 8 - 8
8	9 - 9 - 9
9	- -
10	- -
11	- -

FIG. 28

A. Determination table of production group for misses without reaching

Range of random number for production group determination	Production group for selection
0～1023	Production group 0

B. Determination table of production group for misses after reaching

Range of random number for production group determination	Production group for selection
0～99	Production group 1
100～149	Production group 2
150～249	Production group 3
250～349	Production group 4
350～399	Production group 5
400～459	Production group 6
460～519	Production group 7
520～559	Production group 8
560～589	Production group 9
590～619	Production group 10
620～643	Production group 11
644～663	Production group 12
664～713	Production group 13
714～773	Production group 14
774～833	Production group 15
834～893	Production group 16
894～933	Production group 17
934～973	Production group 18
974～1003	Production group 19
1004～1023	Production group 20

C. Determination table of production group for big hit

Range of random number for production group determination	Production group for selection
0～39	Production group 21
40～59	Production group 22
60～79	Production group 23
80～99	Production group 24
100～119	Production group 25
120～219	Production group 26
220～419	Production group 27
420～459	Production group 28
460～479	Production group 29
480～499	Production group 30
500～539	Production group 31
540～559	Production group 32
560～619	Production group 33
620～719	Production group 34
720～883	Production group 35
884～953	Production group 36
954～1023	Production group 37

FIG. 29

Reach state judgment table

Range of random number for Reach state judgment	Items to be judged
0	with Reach state
1～9	without Reach state

FIG. 30

Left side stop symbol determination table

左図柄決定用乱数の範囲	選択する停止図柄
0	1
1	2
2	3
3	4
4	5
5	6
6	7
7	8
8	9
9	
10	
11	

Central stop symbol determination table

左図柄決定用乱数の範囲	
0	1
1	2
2	3
3	4
4	5
5	6
6	7
7	8
8	9
9	
10	
11	

Right side stop symbol determination table

左図柄決定用乱数の範囲	
0	1
1	2
2	3
3	4
4	5
5	6
6	7
7	8
8	9
9	
10	
11	

FIG. 31

Production pattern determination table (1) for misses without reaching a Reach state

A

Production group	Production pattern	Random number for production pattern determination		Background	Left character				Right character			
		Range of random number	Width of random number		Name	Expression	Real intention design	Phrase	Name	Expression	Real intention design	Phrase
0	1	0	1	Station plaza	Larry	F2	H16	I, I love you.	Cathy	F3	H04	Sorry, you are not my type.
	2	1	1	Station plaza	Larry	F3	H11	Let's go.	Cathy	F4	H16	No. Try someone else.
	3	2	1	Seaside park	Larry	F3	H02	Stare	Cathy	F3	H17	Hey, what are you staring at?
	4	3	1	Station plaza	Larry	F3	H03	Aren't you ever lonely at night?	Cathy	F4	H16	Do you think I might wanna make love with you? Give me a break!
	5	4	1	Station plaza	Ted	F3	H03	Whistle	Cathy	F4	H16	I'm waiting for my boyfriend.
	6	5	1	Station plaza	Ted	F2	H12	Wanna come with me?	Cathy	F3	H16	I won't go with a bad singer.
	7	6	1	Seaside park	Alex	F3	H10	You're gonna be wild about me.	Cathy	F4	H19	Go away, bozo!
	8	7	1	Seaside park	Paul	F2	H03	Won't you have a serious talk with me?	Cathy	F4	H17	I've got no word with you.
	9	8	1	Seaside park	Paul	F3	H02	I'm dying to sleep with you.	Cathy	F3	H18	Cut it out! Pervert!
	10	9	1	Station plaza	Bruce	F3	H02	You are D-cup, right?	Cathy	F4	H19	Stop kidding me! I wear F.
	11	10	1	Station plaza	Mark	F2	H12	Why don't we go to a karaoke parlor and sing together?	Cathy	F4	H16	I'm afraid you and I have different tastes for songs.
	12	11	1	Seaside park	Alex	F2	H04	Let me borrow it.	Jean	F4	H20	No. Definitely not.
	13	12	1	Station plaza	Alex	F3	H16	I bet I'm gonna capture your heart.	Jean	F3	H07	Pick up another girl, will you?
	14	13	1	Station plaza	Alex	F2	H02	How about dinner with me?	Jean	F4	H18	I've just finished.
	15	14	1	Station plaza	Ted	F2	H03	Let's go to a beer garden.	Jean	F3	H19	Sorry, I've got some work to do.
	16	15	1	Station plaza	Ted	F3	H02	Glance	Jean	F4	H20	Don't cast a nasty look at me!
	17	16	1	Station plaza	Paul	F2	H12	Let's go to a karaoke parlor.	Jean	F4	H16	You are tone-deaf, you know.
	18	17	1	Seaside park	Paul	F3	H03	Pop!!	Jean	F3	H17	What the heck is that sound?
	19	18	1	Seaside park	Bruce	F2	H10	Won't you come?	Jean	F3	H16	I'll take a rain check.
	20	19	1	Seaside park	Mark	F2	H15	Why don't we get some stamina and make love?	Jean	F3	H15	You are really insensitive!
	21	20	1	Seaside park	Mark	F3	H06	Hey, babe!	Jean	F4	H07	Sorry, You are not my type.

FIG. 31 (Continue)

B

Production group	Production pattern	Random number for production pattern determination		Background	Left character				Right character				
		Range of random number	Width of random number		Name	Expression	Real intention design	Phrase	Name	Expression	Real intention design	Phrase
0	22	21	1	Station plaza	Bob	F2	H10	I love you from the bottom of my heart.	Mary	F3	H10	Sorry, I have a boyfriend.
	23	22	1	Seaside park	Bob	F3	H16	Why don't we go for a meal?	Mary	F3	H07	I have a date with my boyfriend.
	24	23	1	Seaside park	Larry	F3	H10	Ah-huh	Mary	F3	H16	Don't give me a nasty look!
	25	24	1	Seaside park	Larry	F2	H02	How about dinner with me?	Mary	F3	H17	Why don't you lose your weight?
	26	25	1	Station plaza	Ted	F2	H09	I'll treat you to dinner.	Mary	F3	H12	I've just dined.
	27	26	1	Seaside park	Ted	F2	H13	Let's go make money out of gambling.	Mary	F4	H08	Get a decent job, you bum!
	28	27	1	Seaside park	Ted	F3	H03	Will you please go out with me?	Mary	F2	H16	Sorry, I won't date guys younger than I.
	29	28	1	Station plaza	Paul	F2	H03	I wanna talk to you in a quiet place.	Mary	F2	H17	I'd rather paint the town red.
	30	29	1	Station plaza	Bruce	F3	H02	You are D-cup, right?	Mary	F3	H19	Your thing is small-size, right?
	31	30	1	Station plaza	Bruce	F2	H13	I'm a pachinko pro, you know.	Mary	F4	H08	So what?
	32	31	1	Station plaza	Mark	F2	H09	Noodles are my great favorite.	Mary	F3	H12	Not mine.
	33	32	1	Station plaza	Mark	F3	H06	Why don't we get some stamina and make love?	Mary	F4	H07	Don't embarrass me in public.
	34	33	1	Station plaza	Bob	F3	H03	Come on! You're gonna be all right.	Anne	F4	H20	You never know! Are you nuts? Do you really think I can hang around in there in school uniform?
	35	34	1	Seaside park	Larry	F3	H11	Let's go.	Anne	F4	H16	
	36	35	1	Station plaza	Alex	F3	H03	Glance	Anne	F4	H17	What are you looking at, jackass?
	37	36	1	Station plaza	Paul	F2	H09	Why don't you join me?	Anne	F3	H16	Sorry, I'm on a diet.
	38	37	1	Seaside park	Paul	F2	H04	Let's go to a pachinko parlor.	Anne	F4	H20	High school girls are not allowed to go.
	39	38	1	Station plaza	Bruce	F3	H09	What do you say?	Anne	F3	H16	Well, I'll pass.
	40	39	1	Station plaza	Bruce	F2	H09	Tonkotsu is the best.	Anne	F4	H16	I loathe greasy food.
	41	40	1	Station plaza	Mark	F3	H02	Why don't we get some stamina and make love?	Anne	F4	H19	Suit yourself. I don't care.

FIG. 31 (Continued)

C

Production group	Production pattern	Random number for production pattern determination		Background	Left character					Right character			
		Range of random number	Width of random number		Name	Expression	Real intention design	Phrase		Name	Expression	Real intention design	Phrase
0	42	41	1	Seaside park	Bob	F2	H03	I know a good restaurant.		Martha	F4	H19	I've just had dinner.
	43	42	1	Station plaza	Larry	F3	H02	Gehehe		Martha	F4	H17	Here we go again. That's always the case with nerds.
	44	43	1	Station plaza	Larry	F3	H03	I know a nice restaurant.		Martha	F3	H18	You're gonna be a pig!
	45	44	1	Station plaza	Alex	F3	H02	Gufufu		Martha	F4	H18	I know what you're are thinking about.
	46	45	1	Seaside park	Ted	F2	H03	You are pretty, huh?		Martha	F4	H15	Of course. I'm a model.
	47	46	1	Seaside park	Bruce	F2	H03	Yee hee hee		Martha	F3	H16	You pervert!
	48	47	1	Station plaza	Bruce	F3	H16	I damned like you.		Martha	F4	H07	Go away!
	49	48	1	Station plaza	Bruce	F3	H16	Won't you go out with me?		Martha	F4	H04	Don't you talk to me in such a manner!
	50	49	1	Seaside park	Bruce	F3	H13	Won't you come?		Martha	F3	H08	I won't. I won't.
	51	50	1	Seaside park	Mark	F3	H02	Slurp		Martha	F3	H19	What're you looking at, crackpot?
	52	51	1	Station plaza	Bob	F3	H11	Let's go.		Cindy	F4	H16	I'm at work, you see.
	53	52	1	Seaside park	Bob	F2	H03	I wanna do it right now.		Cindy	F4	H19	I'm at work, you see.
	54	53	1	Seaside park	Bob	F2	H12	Do you wanna hold my microphone?		Cindy	F2	H09	Tell me another, jerk!
	55	54	1	Seaside park	Larry	F3	H02	I know a nice restaurant.		Cindy	F4	H17	I thought you were on a diet, huh?
	56	55	1	Station plaza	Alex	F2	H03	I know a fancy restaurant.		Cindy	F4	H17	I don't like doggish restaurants.
	57	56	1	Seaside park	Alex	F2	H06	How about dinner with me?		Cindy	F4	H07	I'm at work, you see.
	58	57	1	Station plaza	Ted	F3	H03	Whistle		Cindy	F3	H15	Don't you see I'm on the job?
	59	58	1	Seaside park	Ted	F2	H13	Let's go make money out of gambling.		Cindy	F2	H08	Sorry, I have a party.
	60	59	1	Seaside park	Paul	F3	H14	I'll give you my whole love.		Cindy	F3	H04	No, thanks.
	61	60	1	Seaside park	Paul	F2	H04	Let's go to a pachinko parlor.		Cindy	F4	H20	No. You are a poor player, you know. Let me remind you. You can't come on to me. OK?
	62	61	1	Seaside park	Mark	F3	H10	Let's go.		Cindy	F4	H16	
	63	62	1	Station plaza	Mark	F2	H09	Noodles are my great favorite.		Cindy	F4	H16	Sorry? Did you say you like nudes?
	64	63	1	Station plaza	Mark	F3	H02	Huge...		Cindy	F4	H19	Hey! What're you looking at?
	65	64	1	Station plaza	Mark	F2	H09	Noodles are my great favorite.		Cindy	F3	H12	Sorry, I've got some work to do.

FIG. 32

A

Production pattern determination table (2) for misses without reaching a Reach state

Production group	Production pattern	Random number for production pattern determination		Background	Left character				Right character			
		Range of random number	Width of random number		Name	Expression	Real intention design	Phrase	Name	Expression	Real intention design	Phrase
0	66	65	1	Station plaza	Bob	F3	H03	Hey, won't you spend a night with me?	Karen	F3	H16	I have to work at night.
	67	66	1	Station plaza	Bob	F3	H16	Hey, sweetie, won't you go with me?	Karen	F4	H04	We got divorced last month, remember?
	68	67	1	Seaside park	Bob	F2	H03	Huge...	Karen	F2	H19	Cut it out! Pervert!
	69	68	1	Seaside park	Bob	F2	H03	Come on! You're gonna be all right.	Karen	F4	H20	You are really rude!
	70	69	1	Seaside park	Larry	F3	H02	I like chatting rather than making love, you know.	Karen	F3	H18	Don't tell me a fib.
	71	70	1	Station plaza	Larry	F2	H06	Do you love me?	Karen	F4	H07	I don't wanna get involved with you.
	72	71	1	Seaside park	Alex	F2	H12	Why don't we sing together?	Karen	F3	H09	I don't feel like karaoke.
	73	72	1	Station plaza	Alex	F3	H03	Stare	Karen	F4	H20	Hey! What're are you staring at?
	74	73	1	Station plaza	Ted	F2	H12	Won't you join me?	Karen	F4	H16	You are a bad singer, don't you know?
	75	74	1	Seaside park	Ted	F2	H06	Do you like it?	Karen	F4	H07	That might be first place in the food I hate.
	76	75	1	Station plaza	Paul	F2	H12	Won't you have some fun with me?	Karen	F4	H09	You are not my type, sorry.
	77	76	1	Seaside park	Paul	F3	H02	You're in your safe period today, right?	Karen	F3	H20	None of your business!

FIG. 32 (Continue)

B

Production group	Production pattern	Random number for production pattern determination: Range of random number	Random number for production pattern determination: Width of random number	Background	Left character: Name	Left character: Expression	Left character: Real intention design	Left character: Phrase	Right character: Name	Right character: Expression	Right character: Real intention design	Right character: Phrase
0	78	77	1	Station plaza	Bob	F2	H09	Wanna come with me?	Gloria	F3	H12	I'm not hungry now.
	79	78	1	Seaside park	Bob	F3	H03	Come on! You're gonna be all right.	Gloria	F2	H20	Actually, I'm still a virgin...
	80	79	1	Seaside park	Gloria	F2	H14	Will you please go out with me ?	Bob	F3	H18	Introduce some friends of yours to me, will you?
	81	80	1	Station plaza	Larry	F3	H03	Won't you go to a karaoke parlor?	Gloria	F4	H20	Definitely not. Don't you get it? You are tone-deaf.
	82	81	1	Seaside park	Larry	F3	H09	I know a nice restaurant.	Gloria	F4	H12	You know what? That's why you put on weight.
	83	82	1	Station plaza	Larry	F2	H04	I'm broke this month.	Gloria	F4	H20	Then I gotta say good-by to you.
	84	83	1	Seaside park	Gloria	F2	H05	Buy it for me, please, please, please.	Larry	F3	H17	Beg another guy!
	85	84	1	Station plaza	Alex	F2	H03	Oh, my!	Gloria	F2	H20	You are frustrated, aren't you?
	86	85	1	Station plaza	Alex	F3	H02	Gufufu	Gloria	F2	H20	You wanna make love with me, don't you, asshole?
	87	86	1	Seaside park	Gloria	F2	H14	Will you please go out with me ?	Alex	F2	H18	Sorry, I have a girlfriend.
	88	87	1	Station plaza	Gloria	F2	H15	I've been waiting for you for a long time.	Alex	F3	H17	Sorry, we better break up now.
	89	88	1	Station plaza	Ted	F2	H14	Hang out with me, will you?	Gloria	F2	H04	Let me tell you something. I've got costly tastes.
	90	89	1	Station plaza	Ted	F3	H03	Let's see...	Gloria	F3	H18	Shame on you!
	91	90	1	Seaside park	Ted	F2	H04	Hey, Let's go earn some money.	Gloria	F4	H20	No shoplifting!
	92	91	1	Seaside park	Gloria	F2	H14	Will you please go out with me ?	Ted	F3	H18	Not a chance, scag.
	93	92	1	Station plaza	Gloria	F2	H14	For goodness sake, will you marry me?	Paul	F2	H18	I tell you what. Every man has a certain inalienable right to choose women. you know.
	94	93	1	Seaside park	Gloria	F2	H05	Buy it for me, please, please, please.	Paul	F3	H17	Bullshit, pig!
	95	94	1	Station plaza	Gloria	F2	H15	I've been waiting for you for a long time.	Paul	F2	H17	I hope this is the last time to see you.
	96	95	1	Seaside park	Bruce	F2	H09	What do you say?	Gloria	F3	H16	I have a date with my boyfriend.
	97	96	1	Seaside park	Bruce	F3	H02	Hey, sweetie, wanna have fun with me, huh?	Gloria	F4	H20	Sorry, for your information, the "sugar daddy" thing is prohibited, you know.
	98	97	1	Seaside park	Gloria	F2	H05	Buy it for me, please, please, please.	Bruce	F3	H17	How come I have to do a favor for you?
	99	98	1	Station plaza	Mark	F3	H02	I mean no harm.	Gloria	F3	H17	Stop kidding me!
	100	99	1	Seaside park	Mark	F2	H03	Would you like a cup of coffee?	Gloria	F3	H18	And then what're we gonna do?
	101	100	1	Seaside park	Mark	F2	H13	Won't you come with me?	Gloria	F3	H08	You know I can't go in uniform.
	102	101	1	Seaside park	Mark	F3	H03	How about going out to eat?	Gloria	F3	H20	That's it? Are you sure?

FIG. 32 (Continue)

C

Production group	Production pattern	Random number for production pattern determination: Range of random number	Random number for production pattern determination: Width of random number	Background	Left character: Name	Left character: Expression	Left character: Real intention design	Left character: Phrase	Right character: Name	Right character: Expression	Right character: Real intention design	Right character: Phrase
0	103	102	1	Seaside park	Bob	F2	H03	I know a good yakitori parlor.	Sandra	F3	H19	Well, I'll be excused. I'm not in good shape today.
	104	103	1	Station plaza	Bob	F2	H06	I know a good restaurant.	Sandra	F3	H07	Sorry, I have a date with my friend.
	105	104	1	Station plaza	Bob	F3	H02	Hey, won't you spend a night with me?	Sandra	F4	H20	I'm not that kind of girl!
	106	105	1	Station plaza	Sandra	F2	H15	You are really good-looking.	Bob	F2	H17	Th...thanks.
	107	106	1	Station plaza	Larry	F2	H09	Won't you hang out with me?	Sandra	F3	H16	Sorry, I'm in kind of a hurry.
	108	107	1	Station plaza	Larry	F2	H01	I, I'm in love with you.	Sandra	F3	H16	Sorry, I'm in kind of a hurry.
	109	108	1	Station plaza	Larry	F2	H09	I know a good restaurant.	Sandra	F3	H12	Really, stinking gourmet!
	110	109	1	Seaside park	Alex	F3	H02	I won't let you go tonight.	Sandra	F3	H20	Sorry, I gotta go on urgent business.
	111	110	1	Seaside park	Sandra	F2	H14	I have a crush on you. Go with me, please.	Alex	F2	H18	Do you think you are pretty?
	112	111	1	Station park	Sandra	F2	H15	You are really good-looking.	Alex	F2	H17	Sorry, I'm not interested.
	113	112	1	Seaside park	Sandra	F2	H05	Thank you for your present, darling.	Alex	F3	H17	What the hell are you talking about?
	114	113	1	Seaside park	Ted	F3	H03	I'm gonna be done in a minute...	Sandra	F3	H18	Son of a bitch!
	115	114	1	Seaside park	Ted	F2	H12	Let' go.	Sandra	F3	H09	Be my guest.
	116	115	1	Station plaza	Ted	F2	H04	Hey, Let's go earn some money.	Sandra	F3	H20	I don't like gambling!
	117	116	1	Seaside park	Sandra	F2	H05	Thank you for your present, darling.	Ted	F2	H17	You've got the wrong man!
	118	117	1	Station plaza	Paul	F3	H12	Won't you have some fun with me?	Sandra	F3	H09	Sorry, I gotta go on urgent business.
	119	118	1	Seaside park	Paul	F2	H03	Won't you go to a karaoke parlor?	Sandra	F3	H20	Never. You always keep a mike to yourself.
	120	119	1	Seaside park	Sandra	F2	H15	You are really good-looking.	Paul	F2	H17	You have kind of a distinctive face, don't you.
	121	120	1	Station plaza	Bruce	F3	H01	I damned like you.	Sandra	F3	H16	You are not attractive enough to have a wonderful time, you know.
	122	121	1	Seaside park	Bruce	F2	H09	What do you say?	Sandra	F3	H16	Sorry, I'm going to a party.
	123	122	1	Seaside park	Bruce	F3	H13	Won't you come?	Sandra	F3	H08	No way! I'm going for a drink.
	124	123	1	Seaside park	Bruce	F2	H04	Hey, babe.	Sandra	F3	H20	If you wanna borrow some bucks from me, you are talking to a wrong person!
	125	124	1	Station plaza	Mark	F2	H11	Let's go.	Sandra	F4	H16	You are not attractive enough to have a wonderful time, you know.
	126	125	1	Station plaza	Mark	F3	H03	Yee hee hee	Sandra	F3	H18	I know what you're thinking about.
	127	126	1	Seaside park	Mark	F2	H04	Let's go for gambling.	Sandra	F3	H20	I don't like gambling!
	128	127	1	Seaside park	Mark	F3	H02	Hey, wanna fool around with me?	Sandra	F4	H20	I'm not that kind of girl!

FIG. 33

A

Production pattern determination table (1) for misses after reaching a Reach state

*Types of Reach: SLL...Super love-love Reach, DTH...Direct-to-hotel Reach, DSP...Date spot Reach, ANG...Another guy Reach

*Background:STP...Station plaza,SSP...Seaside park

Production group	Production pattern	Random number for production pattern determination		100% omen	*Background	Left character					Right character				Phrase before reaching a Reach state	*Types of Reach	Reach course
		Range of random number	Width of random number			Name	Expression	Real intention desiem	Phrase		Name	Expression	Real intention desiem	Phrase			
1	129	0~127	128		STP	Alex	F3	H02	Glance		Martha	F2	H14	A little bit, OK?		DTH	Direct-to-hotel→All the hotel rooms are occupied
2	130	0~127	128		SSP	Alex	F2	H03	Let me do it.		Cathy	F3	H16	All right, if you say so.	I'm in my safe period today...	DTH	Direct-to-hotel→All the hotel rooms are occupied
3	131	0~127	128		SSP	Paul	F2	H01	I'll give you my whole love.		Jean	F2	H16	What? What am I gonna do?		DTH	Direct-to-hotel→Girl leaves in front of the hotel
4	132	0~63	64		SSP	Larry	F2	H03	Why not have some fun with me?		Anne	F3	H16	What do you wanna do with me?	I can't stand it any longer. I can't stand it any longer.	DTH	Direct-to-hotel→Girl leaves in front of the hotel
	133	64~127	64		SSP	Paul	F3	H02	Shall we go?		Anne	F3	H20	Don't go ahead.		DTH	Direct-to-hotel→Girl leaves in front of the hotel

FIG. 33 (Continue)

B

Production group	Production pattern	Random number for production pattern determination: Range of random number	Random number for production pattern determination: Width of random number	100% omen	*Background	Left character: Name	Left character: Expression	Left character: Real intention design	Left character: Phrase	Right character: Name	Right character: Expression	Right character: Real intention design	Right character: Phrase	Phrase before reaching a Reach state	*Types of Reach	Reach course
5	134	0~8	9		STP	Paul	F2	H09	I know a good restaurant.	Mary	F2	H09	Really? Where?		DSP	Girl leaves in front of the lamen noodles shop
	135	9~17	9		STP	Alex	F2	H06	How about dinner with me?	Anne	F2	H07	Take me to a five-star restaurant.		DSP	Girl leaves in front of the lamen noodles shop
	136	18~26	9		STP	Bruce	F3	H13	I'm a pachinko pro, you know.	Anne	F2	H13	Wow! Let me see your play.		DSP	Girl leaves in front of the pachinko parlor
	137	27~35	9		STP	Bruce	F2	H04	Let's go to a pachinko parlor.	Karen	F4	H20	I can't loan you even a penny.		DSP	Girl leaves in front of the pachinko parlor
	138	36~44	9		SSP	Ted	F3	H12	Let's go hang around somewhere.	Karen	F3	H09	Sure, but where are we going, anyway?		DSP	Girl leaves in front of the karaoke parlor
	139	45~53	9		STP	Paul	F3	H02	Hey, let's get down to business.	Cathy	F2	H14	What? What do you mean "business"?		DTH	Direct-to-hotel→Girl leaves in front of the hotel
	140	54~62	9		SSP	Ted	F2	H16	Hang out with me, will you?	Anne	F3	H04	Can I give you one condition?		DTH	Direct-to-hotel→Girl leaves in front of the hotel
	141	63~71	9		SSP	Bob	F3	H03	Hey, won't you spend a night with me?	Martha	F2	H16	Well, OK, just for dinner.		DTH	Direct-to-hotel→Girl leaves in front of the hotel
	142	72~80	9		SSP	Paul	F3	H03	I'm dying to sleep with you.	Martha	F3	H16	What a nerve!		DTH	Direct-to-hotel→Girl leaves in front of the hotel
	143	81~89	9		STP	Larry	F2	H15	I, I'm in love with you.	Cindy	F3	H05	You don't mean it, right? Don't you have the slightest idea of proposing to me, do you?		DTH	Direct-to-hotel→Girl leaves in front of the hotel
	144	90~98	9		SSP	Mark	F3	H01	Hey, wanna fool around with me?	Karen	F3	H16	What're you driving at?		DTH	Direct-to-hotel→Girl leaves in front of the hotel
	145	99~107	9		SSP	Bob	F2	H02	Hey, won't you spend a night with me?	Gloria	F4	H20	Old geezers are not my type, sorry.		DTH	Direct-to-hotel→Girl leaves in front of the hotel
	146	108~117	10		STP	Bruce	F2	H05	You bet I'm gonna get you whatever you want.	Gloria	F3	H17	Buy it for me, please, please, please.		DTH	Direct-to-hotel→Boy leaves in front of the hotel
	147	118~127	10		STP	Paul	F2	H14	Well, Okay, as long as we're just friends.	Sandra	F2	H18	I have a crush on you. Go with me, please.		DTH	Direct-to-hotel→Boy leaves in front of the hotel

C

FIG. 33 (Continue)

Production group	Production pattern	Random number for production pattern determination: Range of random number	Random number for production pattern determination: Width of random number	100% omen	*Background	Left character: Name	Left character: Expression	Left character: Real intention design	Left character: Phrase	Right character: Name	Right character: Expression	Right character: Real intention design	Right character: Phrase	Phrase before reaching a Reach state	*Types of Reach	Reach course
6	148	0~127	128		SSP	Mark	F3	H03	Gehehe	Cathy	F3	H15	You're so dirty!	That F-cup belongs to me.	DTH	Direct-to-hotel→Girl leaves in front of the hotel
7	149	0~42	43		SSP	Larry	F2	H16	I, I'm in love with you.	Martha	F4	H04	Then prove it, will you?		DSP	In front of the restaurant→All the hotel rooms are occupied
	150	43~85	43		STP	Mark	F2	H02	How about going for a meal with me?	Anne	F2	H17	Buy me expensive food, OK?		DSP	In front of the lamen noodles shop → All the hotel rooms are occupied
	151	86~127	42		SSP	Mark	F2	H13	Won't you come with me?	Mary	F2	H08	Dinner's first, OK?		DSP	In front of the pachinko parlor→All the hotel rooms are occupied
8	152	0~25	26		SSP	Bob	F3	H03	I wanna have some talks with you around here somewhere.	Cindy	F2	H17	All right, but the thing is, I haven't got through my work yet.	I'm gonna make it tonight!	DSP	In front of the bar→ All the hotel rooms are occupied
	153	26~51	26		SSP	Alex	F3	H10	I've been in love with you through all my life.	Cindy	F3	H16	As for me, the later, the better.	Thank God, I changed my underwear!	DSP	In front of the bar→ All the hotel rooms are occupied
	154	52~77	26		SSP	Bruce	F3	H10	Won't you come?	Karen	F3	H10	I'd like to go to some place where the atmosphere is good.	I can give him my whole body if he wishes...	DSP	In front of the restaurant→All the hotel rooms are occupied
	155	78~102	25		SSP	Bruce	F3	H16	Won't you go out with me?	Jean	F3	H04	Well, let me think...	Boy, maybe I can make it!	DSP	In front of the pub→ All the hotel rooms are occupied
	156	103~127	25		STP	Bob	F2	H09	Won't you come with me?	Anne	F3	H12	Well..., all right.	I'm sure I'm gonna get her.	DSP	In front of the lamen noodles shop → All the hotel rooms are occupied
9	157	0~42	43		STP	Larry	F2	H09	Tonkotsu is tasty, huh?	Cindy	F2	H09	You can say that again! Kitakata was the good choice.	.	DSP	In front of the restaurant→Girl leaves in front of the hotel
	158	43~85	43		SSP	Bob	F2	H03	I know a good yakitori parlor.	Martha	F3	H19	Well, actually, I don't like chicken.		DSP	In front of the pub→ Girl leaves in front of the hotel
	159	86~127	42		SSP	Bruce	F2	H09	What do you say?	Cindy	F2	H06	I'm kind of hungry.		DSP	In front of the lamen noodles shop → Girl leaves in front of the hotel
10	160	0~42	43		SSP	Bruce	F3	H09	Why don't we go to a Chinese restaurant?	Cathy	F2	H06	Sounds good! We better get some stamina, you know.	I feel my body tingle.	DSP	In front of the lamen noodles shop → Girl leaves in front of the hotel
	161	43~85	43		SSP	Bob	F2	H13	Won't you have a good time with me?	Anne	F2	H08	Well, it depends on where we're going.	I wonder if I've got that much money.	DSP	In front of the pachinko parlor→ Girl leaves in front of the hotel
	162	86~127	42		STP	Ted	F2	H13	I'm a pachinko pro, you know.	Cindy	F2	H13	Teach me some tricks then.	I wonder if I've got that much money.	DSP	In front of the pachinko parlor→ Girl leaves in front of the hotel

FIG. 34

Production pattern determination table (2) for misses after reaching a Reach state

*Types of Reach: SLL...Super love-love Reach, DTH...Direct-to-hotel Reach, DSP...Date spot Reach, ANG...Another guy Reach

*Background:STP...Station plaza,SSP...Seaside park

A

Production group	Production pattern	Random number for production pattern determination: Range of random number	Random number for production pattern determination: Width of random number	100% omen	*Background	Left character: Name	Left character: Expression	Left character: Real intention desired	Left character: Phrase	Right character: Name	Right character: Expression	Right character: Real intention desired	Right character: Phrase	Phrase before reaching a Reach state	*Types of Reach	Reach course
11	163	0~17	18		SSP	Bob	F3	H15	Hey, sweetie, won't you go with me?	Mary	F2	H17	What do you say to having dinner somewhere?		DSP	In front of the bar→Pass the hotel
	164	18~35	18		SSP	Bob	F3	H10	Are you free tonight?	Martha	F3	H16	I'm kind of hungry, you know.		DSP	In front of the bar→Pass the hotel
	165	36~53	18		STP	Bob	F2	H16	I love you from the bottom of my heart.	Jean	F3	H07	I'd rather eat than talk about love.		DSP	In front of the restaurant→Pass the hotel
	166	54~71	18		SSP	Bruce	F3	H15	You know, I'm up to my neck in consolation money.	Mary	F3	H17	Are you sure you split up with your wife?		DSP	In front of the restaurant→Pass the hotel
	167	72~89	18		SSP	Mark	F2	H14	You are my sunshine.	Martha	F2	H04	Why don't you buy me something then?		DSP	In front of the restaurant→Pass the hotel
	168	90~108	19		SSP	Ted	F2	H11	Let's go.	Cathy	F2	H11	I'm thirsty.		DSP	In front of the pub→Pass the hotel
	169	109~127	19		STP	Mark	F2	H08	How about going for a meal with me?	Cathy	F2	H11	What're you gonna buy me?		DSP	In front of the pub→Pass the hotel
12	170	0~31	32		STP	Larry	F3	H08	I know a good restaurant.	Karen	F2	H11	Then shall we go there?		DSP	Girl leaves the pub
	171	32~63	32		STP	Larry	F2	H02	I know a good restaurant.	Sandra	F3	H19	Are you sure?		DSP	Girl leaves the lamen noodles shop
	172	64~95	32		STP	Bruce	F3	H03	Let's go to a karaoke parlor.	Cathy	F4	H20	You are tone-deaf, you know.		DSP	Girl leaves the karaoke parlor
	173	96~127	32		SSP	Paul	F2	H12	Let's go.	Karen	F2	H12	Promise me to sing seriously.		DSP	Girl leaves the karaoke parlor

FIG. 34 (Continued)

B

Production group	Production pattern	Random number for production pattern determination: Range of random number	Random number for production pattern determination: Width of random number	100% omen	*Background	Left character: Name	Left character: Expression	Left character: Real intention design	Left character: Phrase	Right character: Name	Right character: Expression	Right character: Real intention design	Right character: Phrase	Phrase before reaching a Reach state	*Types of Reach	Reach course
13	174	0~127	128		STP	Paul	F2	H02	I know a good restaurant.	Gloria	F3	H17	Are you sure?		DSP	Lamen noodles shop→All the hotel rooms are occupied
14	175	0~63	64		SSP	Paul	F2	H03	Won't you go out to eat...	Jean	F3	H15	Well, all right, just to eat... Say, why don't we hang around somewhere?	I feel my body tingle. Thank God, I changed my underwear!	DSP	Restaurant→All the hotel rooms are occupied
	176	64~127	64		STP	Ted	F2	H16	You are pretty.	Martha	F2	H01			DSP	Karaoke parlor→All the hotel rooms are occupied
15	177	0~42	43		STP	Larry	F2	H16	Will you please go out with me?	Jean	F3	H01	What do you say to having dinner somewhere? I don't know. Deep-fried chicken is the best, isn't it? Yamucha is good, don't you think?		DSP	Restaurant→Girl leaves in front of the hotel
	178	43~85	43		SSP	Paul	F2	H11	Green soybeans are the best appetizer.	Cindy	F2	H11			DSP	Pub→Girl leaves in front of the hotel
	179	86~127	42		SSP	Larry	F3	H09	Won't you come with me?	Karen	F3	H06			DSP	Lamen noodles shop→Girl leaves in front of the hotel
16	180	0~127	128		SSP	Alex	F2	H12	Let's go.	Anne	F2	H12	Did you practice hard?	I'm gonna make it tonight?	DSP	Karaoke parlor→Girl leaves in front of the hotel
17	181	0~31	32		SSP	Larry	F2	H02	I, I'm in love with you.	Mary	F2	H17	So you wanna go somewhere with me? I'd rather have a drink than make love to you. Will you buy me something? I'm picky about food, you know.		DSP	Bar→Pass the hotel
	182	32~63	32		SSP	Paul	F3	H14	Why don't we go to a hotel?	Mary	F3	H04			DSP	Bar→Pass the hotel
	183	64~95	32		STP	Bruce	F2	H15	Won't you go out with me?	Anne	F2	H05			DSP	Bar→Pass the hotel
	184	96~127	32		SSP	Mark	F2	H02	How about going for a meal with me?	Anne	F3	H18			DSP	Restaurant→Pass the hotel
18	185	0~63	64		SSP	Alex	F2	H02	How about dinner with me?	Martha	F3	H18	I wonder if we have the same taste in food.	I can give him my whole body if he wishes... Boy, maybe I can make it!	DSP	Restaurant→Pass the hotel
	186	64~127	64		STP	Bob	F2	H03	Why don't you have dinner with me?	Cathy	F2	H18	Just dinner?		DSP	Pub→Pass the hotel

FIG. 34 (Continue)

C

Production group	Production pattern	Random number for production pattern determination: Range of random number	Random number for production pattern determination: Width of random number	100% omen	*Background	Left character: Name	Left character: Expression	Left character: Real intention design	Left character: Phrase	Right character: Name	Right character: Expression	Right character: Real intention design	Right character: Phrase	Phrase before reaching a Reach state	*Types of Reach	Reach course
19	187	0~42	43		STP	Mark	F2	H08	How about going for a meal with me?	Mary	F3	H11	Well,...		ANG	Alex appears→Mary leaves with Alex
	188	43~85	43		SSP	Ted	F2	H12	Wanna come with me?	Karen	F2	H12	Okay,...maybe we can relieve stress.		ANG	Mark appears→Karen leaves with Mark
	189	86~127	42		STP	Bruce	F3	H16	I damned like you.	Karen	F2	H07	Then how about dinner with me?		ANG	Mark appears→Karen leaves with Mark
20	190	0~42	43		STP	Alex	F2	H16	I bet I'm gonna capture your heart.	Cathy	F2	H07	Wanna go somewhere with me?	That F-cup belongs to me.	ANG	Bob appears→Cathy leaves with Bob
	191	43~85	43		SSP	Ted	F2	H10	Let's go for a drink.	Jean	F3	H16	OK, just a little while.	I'm sure I'm gonna get her.	ANG	Larry appears→Jean leaves with Larry
	192	86~127	42		SSP	Alex	F2	H15	OK. Anytime.	Jean	F3	H17	Stay with me tonight.	I'm in my safe period today...	ANG	Larry appears→Jean leaves with Larry

FIG. 35

Production pattern determination table (1) for big hits

*Types of Reach: SLL...Super love-love Reach, DTH...Direct-to-hotel Reach, DSP...Date spot Reach, ANG...Another guy Reach

*Background:STP...Station plaza,SSP...Seaside park

*100% omen:ST...Shinkansen bullet train,YT...Yellow train, WD...White dog,BD...Brown dog

Production group	Production pattern	Random number for production pattern determination: Range of random number	Random number for production pattern determination: Width of random number	100% omen	*Background	Left character: Name	Left character: Expression	Left character: Real intention desired	Left character: Phrase	Right character: Name	Right character: Expression	Right character: Real intention desired	Right character: Phrase	Phrase before reaching a Reach state	*Types of Reach	Reach course
21	193	0~63	64	ST	STP	Bob	F2	H14	You wanna make love with me, yeah?	Cathy	F2	H14	That's what I want to say!		SLL	A heart is displayed on the screen→Go into the hotel
	194	64~127	64		SSP	Bob	F2	H01	Hold it tight, will you?	Cathy	F2	H16	All right.		SLL	A heart is displayed on the screen→Go into the hotel
22	195	0~127	128		STP	Mark	F3	H01	Shall I give you a shot?	Karen	F3	H01	Make sure that you satisfy me.		DTH	Direct-to-hotel→Go into the hotel
23	196	0~127	128	WD	SSP	Ted	F3	H03	Oh, my!	Martha	F3	H16	You are frustrated, aren't you?	I feel my body tingle.	DTH	Direct-to-hotel→Go into the hotel
24	197	0~127	128	YT	STP	Larry	F3	H02	Why not have some fun with me?	Jean	F3	H14	I won't let you go to sleep tonight.		DTH	Direct-to-hotel→Go into the hotel
25	198	0~127	128	ST	STP	Mark	F3	H14	Shall I give you a shot?	Martha	F4	H14	I want more.	I can't stand it any longer.	DTH	Direct-to-hotel→Go into the hotel
26	199	0~127	128		STP	Bruce	F3	H01	Hey, sweetie, wanna have fun with me, huh?	Cindy	F3	H01	Well, I'm still at work, but...		DSP	Bar→Go into the hotel
27	200	0~127	128		SSP	Alex	F3	H03	Glance	Anne	F3	H15	You wanna see more?	I feel my body tingle.	DSP	Bar→Go into the hotel
28	201	0~127	128		SSP	Bob	F3	H03	Hey, won't you spend a night with me?	Cathy	F2	H16	All right.		DSP	Bar→Go into the hotel
29	202	0~25	26		STP	Alex	F2	H01	I've been in love with you through all my life.	Cathy	F2	H01	As for me, the later, the better.	That F-cup belongs to me.	DSP	Bar→Go into the hotel
	203	26~51	26		SSP	Bruce	F2	H16	Won't you go out with me?	Cathy	F2	H04	All right.	That F-cup belongs to me. Thank God, I changed my underwear!	DSP	Bar→Go into the hotel
	204	52~77	26		SSP	Alex	F2	H10	I want to know more about you.	Mary	F3	H10	Why don't we have a talk somewhere? I will look much better if I take off my clothes, you know.	That F-cup belongs to me.	DSP	Bar→Go into the hotel
	205	78~102	25	ST	STP	Bruce	F3	H14	You have a really nice body, huh?	Karen	F3	H14			DSP	Bar→Go into the hotel
	206	103~127	25		STP	Paul	F2	H02	You are really wet, aren't you?	Martha	F2	H14	Look who's talking!		DSP	Restaurant→To the hotel

FIG. 35 (Continue)

B

Production group	Production pattern	Random number for production pattern determination: Range of random number	Random number for production pattern determination: Width of random number	100% omen	*Background	Left character: Name	Left character: Expression	Left character: Real intention desired	Left character: Phrase	Right character: Name	Right character: Expression	Right character: Real intention desired	Right character: Phrase	Phrase before reaching a Reach state	*Types of Reach	Reach course
30	207	0~12	13		STP	Bob	F3	H01	I understand you are a hussy.	Jean	F4	H01	You are really rude!		DSP	Bar→Go into the hotel
	208	13~25	13		STP	Alex	F2	H01	I love you.	Cindy	F2	H01	I love you, too.		DSP	Bar→Go into the hotel
	209	26~38	13		STP	Alex	F2	H15	I want to know more about you.	Karen	F2	H15	So why don't we have a good time tonight?		DSP	Bar→Go into the hotel
	210	39~51	13		STP	Mark	F2	H16	Oh, you are really beautiful!	Karen	F2	H01	You are so handsome!		DSP	Bar→Go into the hotel
	211	52~64	13		STP	Paul	F2	H15	I wanna eat your homemade miso soup.	Cathy	F2	H05	You are proposing to me, aren't you?		DSP	Restaurant→Go into the hotel
	212	65~77	13	ST	STP	Larry	F2	H14	Will you go out with me on the marriage basis?	Jean	F2	H14	Of course, if I'm really fine with you.		DSP	Restaurant→Go into the hotel
	213	78~90	13		SSP	Alex	F2	H11	Aren't you thirsty?	Martha	F2	H11	Absolutely!		DSP	Pub→Go into the hotel
	214	91~103	13		SSP	Bruce	F2	H03	You know what? You are my type.	Cindy	F2	H15	I darned like wild men!		DSP	Pub→Go into the hotel
	215	104~115	12		STP	Mark	F2	H03	Let's go to karaoke. Come on!	Martha	F3	H20	Heck, you went down there yesterday with another girl. huh?		DSP	Karaoke parlor→Go into the hotel
	216	116~127	12		STP	Bruce	F2	H13	Do you know which machine is a jackpot?	Mary	F2	H13	Love-love couple!		DSP	Pachinko parlor→Go into the hotel
31	217	0~25	26	YT	STP	Ted	F3	H15	Are you free tonight?	Cathy	F2	H05	Will you buy me something?	I wonder if I've got that much money.	DSP	Bar→Go into the hotel
	218	26~51	26		STP	Ted	F3	H01	Hang out with me, will you? I want to spend the rest of my life together with you. Why not have some fun with me?	Mary	F2	H01	Sure, my boy.	Thank God, I changed my underwear! I can give him my whole body if he wishes... I'm in my safe period today...	DSP	Bar→Go into the hotel
	219	52~77	26		STP	Bob	F3	H15		Jean	F2	H05	I bet I'm gonna be a good wife.		DSP	Restaurant→Go into the hotel
	220	78~102	25	YT	STP	Ted	F2	H16		Martha	F2	H01	What do you mean "fun"? You bet I'm gonna hold and suck it!	I'm in my safe period today...	DSP	Restaurant→Go into the hotel
	221	103~127	25		SSP	Ted	F3	H12	Do you wanna hold my microphone?	Anne	F2	H12		I'm in my safe period today...	DSP	Karaoke parlor→Go into the hotel

FIG. 36

A

Production pattern determination table (2) for big hits

*Types of Reach: SLL...Super love-love Reach, DTH...Direct-to-hotel Reach, DSP...Date spot Reach, ANG...Another guy Reach

*Background:STP...Station plaza,SSP...Seaside park

*100% omen:ST...Shinkansen bullet train,YT...Yellow train, WD...White dog,BD...Brown dog

Production group	Production pattern	Random number for production pattern determination: Range of random number	Random number for production pattern determination: Width of random number	100% omen	*Background	Left character: Name	Left character: Expression	Left character: Real intention design	Left character: Phrase	Right character: Name	Right character: Expression	Right character: Real intention design	Right character: Phrase	Phrase before reaching a Reach state	*Types of Reach	Reach course
32	222	0～10	11		STP	Bruce	F3	H15	Won't you go out with me?	Jean	F2	H15	You know, I darned like men from the Kansai area.		DSP	Bar→Go into the love hotel
	223	11～21	11	ST	STP	Alex	F3	H14	I won't let you go tonight.	Mary	F3	H14	Don't be rough on me, OK?		DSP	Bar→Go into the love hotel
	224	22～32	11		STP	Mark	F3	H03	You are my sunshine.	Jean	F4	H18	Wow! Thank you so much.		DSP	Restaurant→Go into the love hotel
	225	33～43	11	ST	STP	Paul	F2	H14	I have a crush on you.	Anne	F2	H14	Am I really enough for you?		DSP	Restaurant→Go into the love hotel
	226	44～55	12		STP	Paul	F2	H15	I dreamed about you last night.	Martha	F2	H15	Do you love me that much...?		DSP	Restaurant→Go into the love hotel
	227	56～67	12		SSP	Larry	F2	H14	Let me take a picture of you.	Cindy	F3	H04	No nude pictures, OK?		DSP	Restaurant→Go into the love hotel
	228	68～79	12		STP	Mark	F2	H06	Do you like gyoza?	Cathy	F2	H07	Would you like to have a stinking affair with me?		DSP	Lamen noodles shop→Go into the love hotel
	229	80～91	12		SSP	Paul	F2	H09	How about dinner with me?	Cindy	F2	H06	I'm starving.		DSP	Lamen noodles shop→Go into the love hotel
	230	92～103	12		SSP	Bruce	F3	H06	Why don't we go to our usual restaurant?	Cindy	F3	H06	Sounds great!		DSP	Lamen noodles shop→Go into the love hotel
	231	104～115	12		STP	Mark	F2	H09	Noodles are my great favorite.	Anne	F2	H12	Why don't we eat at a karaoke parlor?		DSP	Karaoke parlor→Go into the love hotel
	232	116～127	12		SSP	Bruce	F2	H13	I'm a pachinko pro, you know.	Jean	F2	H08	Then let's go for a drink on you.		DSP	Pachinko parlor→Go into the love hotel

B

FIG. 36 (Continue)

Production group	Production pattern	Random number for production pattern determination: Range of random number	Random number for production pattern determination: Width of random number	100% omen	*Background	Left character: Name	Left character: Expression	Left character: Real intention desired	Left character: Phrase	Right character: Name	Right character: Expression	Right character: Real intention desired	Right character: Phrase	Phrase before reaching a Reach state	*Types of Reach	Reach course
33	233	0~13	14		SSP	Alex	F3	H10	I won't let you go tonight. Will you go out with me on the marriage basis?	Karen	F3	H16	Hold me tight... What? Did you say "marriage"?	I'm in my safe period today... I can give him my whole body if he wishes...	DSP	Bar→Go into the love hotel
	234	14~27	14		STP	Larry	F2	H01	Won't you go out to eat?	Anne	F3	H01	I know a nice restaurant. Wanna go?	I wonder if I've got that much money.	DSP	Restaurant→Go into the love hotel
	235	28~41	14		STP	Paul	F2	H08	Let's go for Tonkotsu lamen noodles.	Karen	F3	H11	That's a good idea! Let's go.	I'm sure I'm gonna get her.	DSP	Pub→Go into the love hotel
	236	42~55	14	WD	SSP	Larry	F2	H09	How about going for a meal with me?	Jean	F2	H06	OK, I'm going with you 'cause today is my birthday.	Boy, maybe I can make it!	DSP	Lamen noodles shop→Go into the love hotel
	237	56~69	14		STP	Larry	F2	H02	Let's eat something to perk ourselves up.	Mary	F2	H18	We're gonna be really energetic, aren't we?	I feel my body tingle.	DSP	Lamen noodles shop→Go into the love hotel
	238	70~83	14		STP	Paul	F3	H02	Noodles are my great favorite.	Martha	F2	H19	Why don't we make ourselves really hot?	Boy, maybe I can make it!	DSP	Lamen noodles shop→Go into the love hotel
	239	84~97	14		STP	Mark	F2	H09	Let's sing animated cartoon songs.	Karen	F2	H09	You are a real animaniac!	I wonder if I've got that much money.	DSP	Karaoke parlor→Go into the love hotel
	240	98~112	15	BD	SSP	Larry	F2	H12	You look really gorgeous!	Anne	F2	H12	You are so sweet!	I'm sure I'm gonna get her.	DSP	Karaoke parlor→Go into the love hotel
	241	113~127	15		STP	Ted	F3	H16		Anne	F3	H01	Are you sure? We can separate the bill, if you like.		DSP	Restaurant→Go into the love hotel
34	242	0~127	128		SSP	Ted	F2	H02	I'll buy you dinner.	Jean	F2	H18	Is that really enough for you?	Boy, maybe I can make it! I can't stand it any longer.	DSP	Restaurant→Go into the love hotel
35	243	0~31	32		SSP	Alex	F3	H01	I bet I'm gonna capture your heart.	Mary	F2	H16	Lech!		DSP	Restaurant→Go into the love hotel
	244	32~63	32		STP	Alex	F3	H02	Pop!	Mary	F3	H14	What're you talking about? You are really enthusiastic about costume plays, aren't you?	I'm gonna make it tonight!	DSP	Restaurant→Go into the love hotel
	245	64~95	32		STP	Larry	F2	H15	I, I'm in love with you.	Martha	F2	H15			DSP	Restaurant→Go into the love hotel
	246	96~127	32	ST	STP	Ted	F3	H14	Are you free tonight?	Cindy	F3	H14		I'm gonna make it tonight!	DSP	Restaurant→Go into the love hotel

FIG. 36 (Continue)

C

Production group	Production pattern	Random number for production pattern determination: Range of random number	Random number for production pattern determination: Width of random number	100% omen	*Background	Left character: Name	Left character: Expression	Left character: Real intention desire	Left character: Phrase	Right character: Name	Right character: Expression	Right character: Real intention desire	Right character: Phrase	Phrase before reaching a Reach state	*Types of Reach	Reach course
36	247	0~63	64		STP	Bob	F2	H15	You wanna sleep with me, yeah?	Jean	F3	H15	If you're satisfied with me...		ANG	Alex passes by, Lamen noodles shop→Go into the love hotel
	248	64~127	64		STP	Mark	F3	H02	How much is it per night?	Jean	F3	H20	Not that cheap.		ANG	Bob passes by, Lamen noodles shop→Go into the love hotel
37	249	0~31	32		STP	Bob	F2	H12	You said it! I love you.	Mary	F2	H09	Are you sure you divorce your wife?	I can give him my whole body if he wishes...	ANG	Mark passes by, Lamen noodles shop→Go into the love hotel
	250	32~63	32		STP	Paul	F2	H16	I want all about you.	Mary	F2	H07	I wanna get to know you, too.	I'm sure I'm gonna get her.	ANG	Ted passes by, Lamen noodles shop→Go into the love hotel
	251	64~95	32		STP	Bob	F3	H14	Why don't we have sugar daddy business?	Anne	F3	H04	Well, let me think...	I can't stand it any longer.	ANG	Bruce passes by, Lamen noodles shop→Go into the love hotel
	252	96~127	32		STP	Ted	F2	H15	Hang out with me, will you?	Anne	F3	H15	Am I really enough for you?	I'm gonna make it tonight!	ANG	Paul passes by, Lamen noodles shop→Go into the love hotel

FIG. 37

Table of Expressions of male characters in the standard game

Expressions in expressing the phrase

Expression in a miss

Name of character	Basic Expression F1	セリフを表示する際の表情 F2	F3	はずれの際の表情 F4
Bob				
Larry				
Alex				
Ted				
Paul				
Bruce				
Mark				

FIG. 38

Expressions in expressing the phrase

Table of Expressions of female characters in the standard game

Name of character	Basic Expression F1	セリフを表示する際の表情 F2	F3	F4
Cathy				
Jean				
Mary				
Anne				
Martha				
Cindy				
Karen				
Gloria				
Sandra				

INTERNATIONAL SEARCH REPORT

International application No.
PCT/JP00/05693

A. CLASSIFICATION OF SUBJECT MATTER
Int.Cl[7] A63F7/02

According to International Patent Classification (IPC) or to both national classification and IPC

B. FIELDS SEARCHED

Minimum documentation searched (classification system followed by classification symbols)
Int.Cl[7] A63F7/02

Documentation searched other than minimum documentation to the extent that such documents are included in the fields searched
Jitsuyo Shinan Koho 1922-1996 Toroku Jitsuyo Shinan Koho 1994-2000
Kokai Jitsuyo Shinan Koho 1971-2000 Jitsuyo Shinan Toroku Koho 1996-2000

Electronic data base consulted during the international search (name of data base and, where practicable, search terms used)

C. DOCUMENTS CONSIDERED TO BE RELEVANT

Category*	Citation of document, with indication, where appropriate, of the relevant passages	Relevant to claim No.
X Y	JP, 11-192351, A (Taiyo Elec Co., Ltd.), 21 July, 1999 (21.07.99), Full text; Figs. 1 to 27 Full text; Figs. 1 to 27 (Family: none)	1-7,9,10 8,11-17
Y	JP, 10-127877, A (Sophia Co., Ltd.), 19 May, 1998 (19.05.98), Full text; Figs. 1 to 19 (Family: none)	8,12-17
Y	JP, 8-117408, A (Sammy Ind. Co., Ltd.), 14 May, 1996 (14.05.96), Par. No. [0022] (Family: none)	16

☐ Further documents are listed in the continuation of Box C. ☐ See patent family annex.

* Special categories of cited documents:
"A" document defining the general state of the art which is not considered to be of particular relevance
"E" earlier document but published on or after the international filing date
"L" document which may throw doubts on priority claim(s) or which is cited to establish the publication date of another citation or other special reason (as specified)
"O" document referring to an oral disclosure, use, exhibition or other means
"P" document published prior to the international filing date but later than the priority date claimed
"T" later document published after the international filing date or priority date and not in conflict with the application but cited to understand the principle or theory underlying the invention
"X" document of particular relevance; the claimed invention cannot be considered novel or cannot be considered to involve an inventive step when the document is taken alone
"Y" document of particular relevance; the claimed invention cannot be considered to involve an inventive step when the document is combined with one or more other such documents, such combination being obvious to a person skilled in the art
"&" document member of the same patent family

Date of the actual completion of the international search	Date of mailing of the international search report
07 December, 2000 (07.12.00)	19 December, 2000 (19.12.00)
Name and mailing address of the ISA/ Japanese Patent Office Facsimile No.	Authorized officer Telephone No.

Form PCT/ISA/210 (second sheet) (July 1992)