(19) Europäisches Patentamt
European Patent Office
Office européen des brevets

(11) EP 1 164 261 B2

(12) **NEW EUROPEAN PATENT SPECIFICATION**
After opposition procedure

(45) Date of publication and mention of the opposition decision:
14.09.2011 Bulletin 2011/37

(45) Mention of the grant of the patent:
06.07.2005 Bulletin 2005/27

(21) Application number: **01113249.5**

(22) Date of filing: **31.05.2001**

(51) Int Cl.:
F01M 11/03 *(2006.01)*

(54) **Plug for a machine**

Dichtungszapfen für Maschine

Bouchon pour machine

(84) Designated Contracting States:
AT BE CH CY DE DK ES FI FR GB GR IE IT LI LU MC NL PT SE TR

(30) Priority: **16.06.2000 DK 200000208**

(43) Date of publication of application:
19.12.2001 Bulletin 2001/51

(73) Proprietor: **Bjarne Thorup Andreasen**
7700 Thisted (DK)

(72) Inventor: **Bjarne Thorup Andreasen**
7700 Thisted (DK)

(74) Representative: **Nielsen, Henrik Sten**
Budde Schou A/S
Vester Søgade 10
1601 Copenhagen V (DK)

(56) References cited:
US-A- 4 174 231 **US-A- 4 507 199**
US-A- 4 854 277 **US-A- 5 454 355**

EP 1 164 261 B2

Description

[0001] The present invention concerns the use of a plug for covering connection apertures with the purpose of preventing fluid leakage from a machine, where the plug has a fastening means for fastening the plug to the machine in place of equipment that is connected to the connection apertures during normal operation of the machine. The plug is provided with a sealing flange which is arranged for sealingly covering at least two connection apertures simultaneously.

[0002] For environmental reasons, there are regulations determining the rules for preventive environmental measures to be observed by destruction of machines, e.g. engines, pumps, compressors, hydraulic units, and similar, so that unwanted materials, like oil, chemicals and poisons do not escape to the ambient environment.

[0003] For example, by scrapping cars it is an environmental requirement that lubricating oil and other liquids contained in the vehicle, is drained and collected in a secure way. In that connection, the oil filter of the engine constitutes a special problem as the filter cartridge contains a certain amount of oil which can not readily be drained. It is an environmental law requirement that the oil filter is dismounted and collected separately for controlled destruction. By dismounting the oil filter, the inlet and outlet ducts of the cylinder block for the lubricating oil are exposed. This includes: A) the outlet duct for the lubricant from the cylinder block to the oil filter which is placed on a pipe stub with external thread. The pipe stub is driven into the block, and the filter cartridge is fitted on the engine by screwing onto this stub. B) Inlet ducts (one or more distribution ducts) for the lubricant having passed the oil filter and returning to the block.

[0004] The oil ducts constitute a certain risk of leakage of lubricating oil from the cylinder block as emptying the block completely of lubricants is not possible in practice when the oil is drained in the usual way via drain plugs in the oil pan on the block. The many internal lubricating ducts and cavities in the cylinder block and associated engine components means that a residual content of about 1.5 1 of oil may remain in the engine when the oil has been drained out via the oil pan. Under favourable circumstances, e.g. in the engine lies down on the side during transport and storage, the residue with leak out through the exposed oil ducts.

[0005] In order to solve the general environmental problem of leaking undesirable liquids from machines, the different connection apertures have been e.g. covered with plugs, e.g. DBI-dut® plugs, which means more work when the connection apertures are of varying number, dimension and shape.

[0006] Furthermore, there are developed methods/apparatuses for emptying machines from undesired liquids. The emptying may e.g. occur:

- by dripping off liquid over a collecting container
- by flushing the machines with water or a cleansing liquid which is collected subsequently.
- by sucking the liquid out of the machine by means of underpressure

[0007] These methods demand costs for apparatuses for emptying the machine and possibly space for storing the emptied liquid. Furthermore, the methods are time-consuming.

[0008] By the scrapping of cars, it has been attempted to solve the problem by dismounting the oil filter and place it with the threaded hole facing downwards for a certain number of hours for natural dripping off over a waste tray, after which the oil filter is remounted and functions as a closing plug for the lubricant ducts. Another known solution consists of fitting a new oil filter on the engine. The new unused oil filter can be accepted by the environmental authorities as a plug and thus constitutes an effective solution to the problem. Due to relative high prices on new car parts, including new oil filters, the solution is not attractive to the car breakers.

[0009] From US 4,854,277, the use of a plug having a separate sealing element which is arranged for sealingly covering at least two connection apertures simultaneously of a machine and having a sealing flange which is arranged to bear against the machine and also having means for fastening the plug to the machine is known, thereby sealingly covering the connection apertures on an engine after dismounting the oil filter.

[0010] The purpose of the invention is to indicate a cheap, easily fitted and environmentally friendly plug whereby at least two connection apertures on a machine may be covered simultaneously for preventing leakage of unwanted liquids to the environment.

[0011] According to the present invention, this is achieved with the use of plug of the kind mentioned in the introduction as defined in independent claim 1. With the use of such a plug is achieved a very simple and cheap solution which enables a quick plugging and simultaneously covering two or more connection apertures.

[0012] By the fastening of the plug there is used the part on the machine to which the equipment attached during normal operation of the machine has been connected. By using an injection moulded plug of thermoplastic material, preferably polypropylene or polyethylene the plug may be made with a very low cost per item. Particularly polypropylene has appeared in practice to have a flexibility and softness suitable for the purpose, making the plug self-sealing when the sealing flange is clamped against the machine by screwing the plug, whereby sealing means are avoided, such as rubber sealing rings and the like, between the sealing flange and the machine.

[0013] In order that the plug is to be fitted readily without using sophisticated tools, the plug is provided with a finger grip situated at the opposite side of the flange relative to the sealing flange. The form of the grip depends on the way in which the plug is to be fastened.

[0014] This may be, for example:

- A plug with a finger grip with a number of radial wings, allowing the plug to be screwed onto a threaded stub or into a threaded hole.
- A plug with a finger grip with minimum two recesses for the fingers, allowing the plug to be screwed on a threaded stub or into a threaded hole, and which also may be fitted by hammering.
- A plug with a finger grip with knurled side edge, to a certain degree allowing the plug to be screwed on a threaded stub or into a threaded hole, and which also may be fitted by hammering.

[0015] Instead of a finger grip there are other possible ways of mounting a plug. E.g. a plug with an internal or external shape or arrangement for engaging corresponding members on a screwing tool, for example a screwdriver, a spanner, an Allan key, or similar.

[0016] Alternatively, the plug to be used in accordance with the present invention may be designed as a combination of a finger grip and an engaging arrangement. For example, a crosshead located at the centre of the radial wings of the finger grip so that the plug may be mounted either with the fingers or with a screwdriver.

[0017] The plug to be used in accordance with the present invention has a fastening means enabling clamping of the plug against a machine. The fastening means depends on the machine having the connection apertures to be covered and may e.g. comprise.

- A plug with a threaded hole which may be screwed onto an existing threaded stub
- A plug with a threaded stub to be screwed into an existing threaded hole,
- A plug with a stub of soft material that may be driven with blows into a central hole, enabling fitting the plug on machines having e.g. connection apertures without external and internal thread.
- A plug with an inner section of resilient or yielding material that may be deformed by blows, enabling mounting the plug on machines which, for example, have lesser shafts, pipes and the like projecting out from the surface of the machine.

[0018] These embodiments will be the most common with plugs to be used in accordance with the present invention to cover connection apertures on most machines if easy mounting is to be achieved. Alternatively, the plug will be designed with attachments with holes so that the plug may be fastened by screwing/riveting.

[0019] The plug is made of a cheap material:

- which is resistant against the liquids to be retained.
- which is resistant to the weather during outdoor storage.
- which may be combusted or melted without further environmental damage by remelting the machine.

[0020] Hence, the material may be selected among thermoplastic materials, elastomers or metal alloys.

[0021] By using a plug for sealing by covering connection apertures on engines after dismounting the oil filter, the plug will be provided with a central, internal threaded hole (blind hole) which is adapted for the external thread of the pipe stub on which the oil filter is normally fitted.

[0022] Furthermore, the plug to be used in accordance with the present invention may be provided with an annular sealing flange, the external diameter mainly corresponding to the diameter of the corresponding sealing face (sealing ring) of the dismounted oil filter so that the sealing flange seals off against the same plane clamping surface on the cylinder block as the oil filter.

[0023] When the plug has been clamped against the cylinder block, all exposed lubricating oil ducts are closed. The finger grip of the plug is shaped as a wing grip enabling screwing the plug on manually without use of sophisticated tools.

[0024] By using the plug described, one may achieved the intended environmental goals required by law as the plug efficiently prevents leakage of liquids from the connecting apertures of a machine.

[0025] The invention may find application in different areas where connection apertures of different kinds and shapes are wanted to be covered. For example, connection apertures may have other geometries than annular and other connecting means than threads.

[0026] The invention is now explained in more detail with reference to the accompanying drawings where a non-limiting embodiment of a plug for use on a car engine after dismounting the oil filter is shown, and where:

Fig. 1	shows side view of a first embodiment of a plug according to the invention which is not part of the invention,
Fig. 2	shows the same as Fig. 1 but in a front view,
Fig. 3	shows the plug of Fig. 1 as seen from side of the threaded hole,
Fig. 4	shows the plug of Fig. 1 in a section along the line A-A in Fig. 1,
Fig. 5	shows a detail of a cylinder block with threaded stub for an oil filter before fitting a plug which is not part of the invention,
Fig. 6	shows a detail of plug screwed on a cylinder block,
fig. 7	shows a detail of Fig. 4 with sealing flange with several annular elevations,
Fig. 8	shows a detail of Fig. 4 in another embodiment with several annular elevations and sealing beads to be used in accordance with the present invention,
Fig. 9	shows a front view of a second embodiment of a plug with an alternative finger grip,
Fig. 10	shows a side view of the embodiment of Fig. 9.

[0027] In the embodiment shown in Figs. 1 - 4, the plug 1 consists of a circular disc-shaped flange 2 which at one

side (the closure side) is provided with a central threaded hole 3 and an annular sealing flange 4, and which on the opposite side is provided with a number of radial wings 5, which together form a finger grip 6. The threaded hole 3 forms a blind hole, and between the threaded hole and the sealing flange 4, the plug is designed with a recess-like indentation 7 as the sealing flange, with regard to the sealing effect, is slightly projecting relative to the remaining part of the plug by screwing onto the cylinder block.

[0028] In this way it is ensured that the axial clamping force provided when the plug is screwed tightly onto the block is concentrated in the sealing flange. The thread in the central threaded hole 3 is adapted to the oil filter stub 8 on the cylinder block M for which the plug 1 is intended.

[0029] The plug is fitted on the place of the oil filter as shown in Figs. 5 and 6, whereby all the oil ducts 9 and 10 of the block adjacent to the oil filter are covered.

[0030] On the detail in Fig. 7, the sealing flange 4a is shown with several steps, and in the detail in Fig. 8, the sealing flange 4a is shown with several steps and with sealing lips or beads 11. These extra steps and sealing beads enables using the plug against an uneven contact surface and still achieving a satisfactory degree of sealing.

[0031] In Figs. 9 and 10 is shown a plug 13 with an alternative finger grip with recesses or indentations 12 as compared with the finger grip of Fig. 1 and 2.

[0032] After analysis of different common car models (and associated engines), in these embodiments for covering oil ducts by dismounting the oil filter, an assortment of five different plugs with five different thread sizes and flange diameters appears to be sufficient to satisfy the entire need for plugs 1.

[0033] The plug 1 is made by injection moulding of polypropylene and is intended for following the cylinder block all the way to remelting. By remelting, the polypropylene is completely combusted. As it is a material based purely on hydrocarbons and as the combustion occurs at a very high temperature, the combustion is not contaminating, i.e. without further environmental problems.

[0034] The invention is not limited to the embodiment described above with reference to the drawing. Other materials and other features of the individual elements of the plug are feasible with the scope of the claims.

Claims

1. Use of a plug (1) for covering connection apertures with the purpose of preventing fluid leakage from a machine, where the plug (1) has a fastening means (3) for fastening the plug to the machine (M) in place of equipment that is connected to the connection apertures during normal operation of the machine (M), where the plug is provided with a sealing flange (4) which is arranged for sealingly covering at least two connection apertures simultaneously, and where the sealing flange (4), which is arranged to bear against the machine by the fastening of the plug, is profiled with at least one peripheral and annular elevation designed with two annular sealing lips (11) and integrally formed together with the plug being an injection moulded plug, by sealingly covering connection apertures (9, 10) on an engine (M) after dismounting the oil filter.

2. Use of a plug according to claim 1, **characterised in that** the plug is provided with a finger grip (6) situated at the opposite side of the flange (2) relative to the sealing flange (4).

3. Use of a plug according to claim 2, **characterised in that** the plug is provided with at least one of the following:

   - a finger grip (6) with a number of radial wings (5),
   - a finger grip (6) with minimum two recesses (12), or
   - a finger grip (6) with knurled side edge.

4. Use of a plug according to any of claims 1-3, **characterised in that** the plug is designed in a way to be fastened comprising one of the following:

   - with a threaded hole (3) which may be screwed onto an existing threaded stub (8),
   - with a threaded stub to be screwed into an existing threaded hole,
   - with an inner section of resilient or yielding material that may be deformed by blows,
   or
   - with a stub of resilient or yielding material that may be driven into a central hole.

5. Use of a plug according to any of claims 1-4, **characterised in that** the plug is made of material which is resistant to the fluid to be retained and which is friendly to the environment when destroyed, the material being from the group of thermoplastic materials, preferably polypropylene or polyethylene, from the group og elastomers, or from the group of metal alloys.

6. Use of a plug according to any of claims 1-5 **characterised in that** the plug has an internal or external shape or arrangement for engaging corresponding members on a screwing tool, for example a screwdriver, a spanner, an Allan key, or similar.

Patentansprüche

1. Benutzung eines Dichtungsstopfens (1) zum Verschließen von Anschlussöffnungen mit dem Zweck,

Fluidleckagen aus einer Maschine zu verhindern, wobei der Dichtungsstopfen (1) Befestigungsmittel (3) zum Befestigen des Dichtungsstopfens an der Maschine (M) an Stelle des Ausrüstungsteiles aufweist, das während des normalen Betriebes der Maschine (M) mit den Anschlussöffnungen verbunden ist, wobei der Dichtungsstopfen mit einem Abdichtungsflansch (4) ausgestattet ist, welcher so angeordnet ist, dass er mindestens zwei Anschlussöffnungen gleichzeitig abdichtend verschließt, und wobei der Abdichtungsflansch (4), welcher angeordnet ist, um durch das Befestigen des Dichtungsstopfens an der Maschine anzuliegen, mit mindestens einer peripheren und ringförmigen Erhöhung profiliert ist, welche mit zwei ringförmigen Abdichtungslippen (11) ausgebildet ist und mit dem Dichtungsstopfen, welcher ein Spritzguss-Dichtungsstopfen ist, integral geformt ist, wodurch Anschlussöffnungen (9, 10) an einer Maschine (M) nach Abmontieren des Ölfilters abdichtend verschlossen werden.

2. Benutzung eines Dichtungsstopfens nach Anspruch 1, **dadurch gekennzeichnet, dass** der Dichtungsstopfen mit einem Fingergriff (6) ausgestattet ist, welcher in Bezug auf den Abdichtungsflansch (4) auf der gegenüberliegenden Seite des Flansches (2) angeordnet ist.

3. Benutzung eines Dichtungsstopfens nach Anspruch 2, **dadurch gekennzeichnet, dass** der Dichtungsstopfen mit mindestens einem der folgenden Merkmale ausgestattet ist:

- einem Fingergriff (6) mit einer Anzahl von radialen Flügeln (5);
- einem Fingergriff (6) mit mindestens zwei Vertiefungen (12), oder
- einem Fingergriff (6) mit gerändelter Seitenkante.

4. Benutzung eines Dichtungsstopfens nach irgendeinem der Ansprüche 1 bis 3, **dadurch gekennzeichnet, dass** der Dichtungsstopfen zur Befestigung ausgestaltet ist, wobei er eines der folgenden Merkmale umfasst:

- eine Gewindeöffnung (3), welche auf einen vorhandenen Gewindebolzen (8) aufgeschraubt werden kann;
- einen Gewindebolzen, welcher in eine vorhandene Gewindeöffnung eingeschraubt werden soll;
- einen inneren Abschnitt aus elastischem oder nachgebendem Material, das durch Schläge verformt werden kann, oder
- einen Bolzen aus elastischem oder nachgebendem Material, der in eine zentrale Öffnung eingetrieben werden kann.

5. Benutzung eines Dichtungsstopfens nach irgendeinem der Ansprüche 1 bis 4, **dadurch gekennzeichnet, dass** der Dichtungsstopfen aus einem Material hergestellt ist, welches gegen das zurückzuhaltende Fluid resistent ist, und welches umweltfreundlich ist, wenn es zerstört wird, wobei das Material aus der Gruppe von thermoplastischen Materialien stammt, vorzugsweise Polypropylen oder Polyethylen, aus der Gruppe von Elastomeren oder aus der Gruppe von Metalllegierungen.

6. Benutzung eines Dichtungsstopfen nach irgendeinem der Ansprüche 1 bis 5, **dadurch gekennzeichnet, dass** der Dichtungsstopfen eine innere und äußere Form oder eine Anordnung aufweist, um mit entsprechenden Teilen eines Schraubwerkzeugs einzugreifen, beispielsweise einem Schraubendreher, einem Schraubenschlüssel, einem Innensechskantschlüssel, oder dergleichen.

Revendications

1. Utilisation d'un bouchon (1) pour couvrir des ouvertures de raccordement ayant pour objectif de prévenir des fuites de liquide d'une machine, où le bouchon (1) a un moyen de fixation (3) pour fixer le bouchon à la machine (M) en place d'équipement qui est relié aux ouvertures de raccordement lors de l'opération normale de la machine (M), où le bouchon est muni d'une arête d'étanchéité (4) qui est disposée afin de couvrir de manière étanchéifiante au moins deux ouvertures de raccordement simultanément, et où l'arête d'étanchéité (4), qui est disposée de manière à reposer sur la machine par la fixation du bouchon, est profilée avec au moins une élévation circonférentielle et annulaire qui est conçu avec deux lèvres étanchéifiantes annulaires (11) et formée en partie intégrante avec le bouchon qui est un bouchon moulé par injection, en couvrant de manière étanchéifiante les ouvertures de raccordement (9, 10) sur un moteur (M) après le démontage du filtre à huile.

2. Utilisation d'un bouchon selon la revendication 1, **caractérisée en ce que** le bouchon est muni d'une prise pour les doigts (6) située du côté opposé de l'arête (2) relative à l'arête d'étanchéité (4).

3. Utilisation d'un bouchon selon la revendication 2, **caractérisée en ce que** le bouchon est muni d'au moins un des éléments suivants:

- une prise pour les doigts (6) avec un nombre d'ailes radiales (5),
- une prise pour les doigts (6) avec au moins deux cavités (12), ou
- une prise pour les doigts (6) avec un côté latéral

à rainures.

4. Utilisation d'un bouchon selon l'une quelconque des revendications 1 à 3, **caractérisée en ce que** le bouchon est conçu de manière à être fixé et comprenant un des éléments suivants:

- avec un trou taraudé (3) qui peut être vissé sur un bout fileté (8),
- avec un bout fileté qui peut être visé à l'intérieur d'un trou taraudé existant,
- avec une section intérieure d'une matière élastique ou souple qui peut être déformée par des soufflures,

ou

- avec un bout d'une matière élastique ou souple qui peut être dirigé à l'intérieur d'un trou central.

5. Utilisation d'un bouchon selon l'une quelconque des revendications 1 à 4, **caractérisée en ce que** le bouchon est fait d'une matière qui est résistante au liquide à être retenu et laquelle matière est favorable à l'environnement lorsqu'elle est détruite, la matière venant du groupe des matières thermoplastiques, préférablement du polypropylène ou du polyéthylène ou du groupe des élastomères ou du groupe d'alliages métalliques.

6. Utilisation d'un bouchon selon l'une quelconque des revendications 1 à 5, **caractérisée en ce que** le bouchon a une forme interne ou externe ou un arrangement pour accoupler des membres correspondants sur un outil de vis, par exemple un tournevis, une clé de serrage, une clé mâle coudée ou similaire.

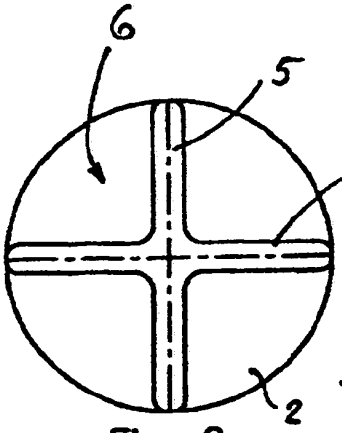

Fig. 2

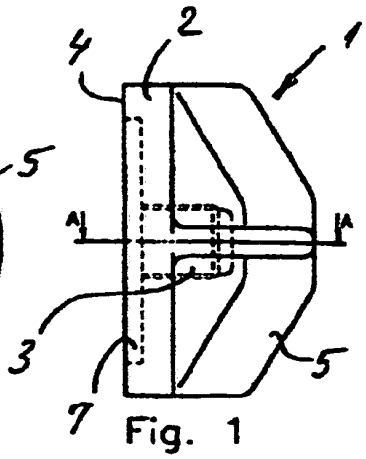

Fig. 1

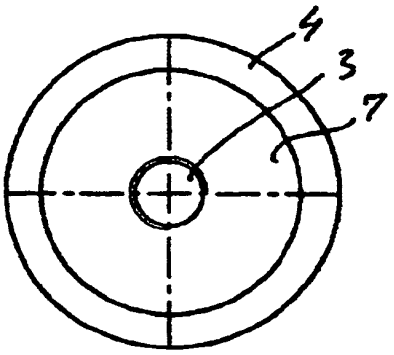

Fig. 3

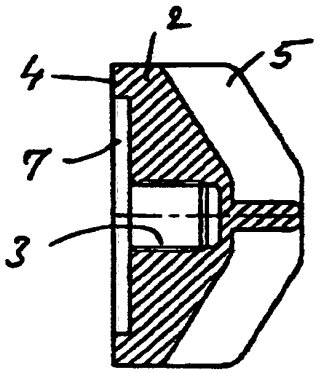

Fig. 4

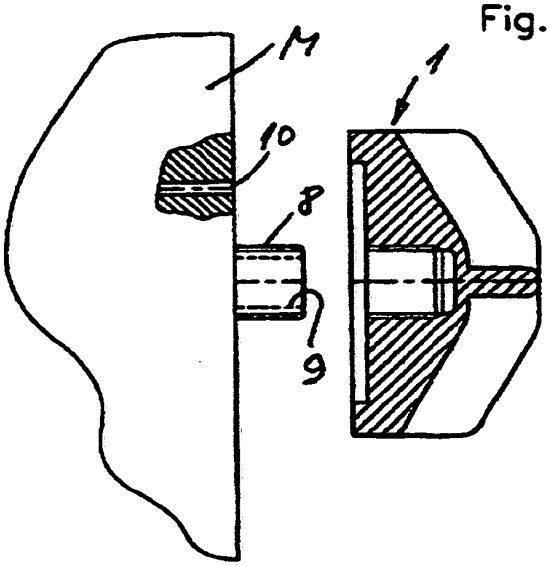

Fig. 5

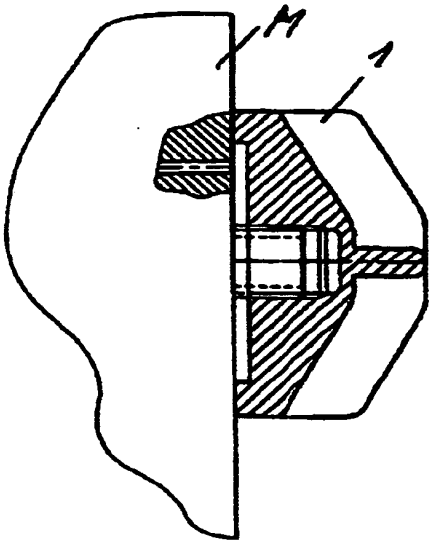

Fig. 6

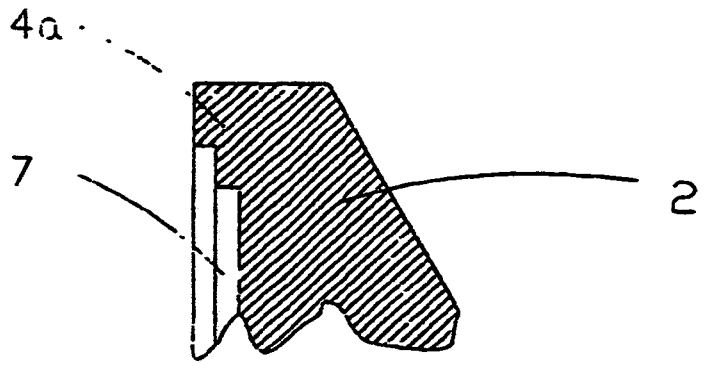

Fig. 7

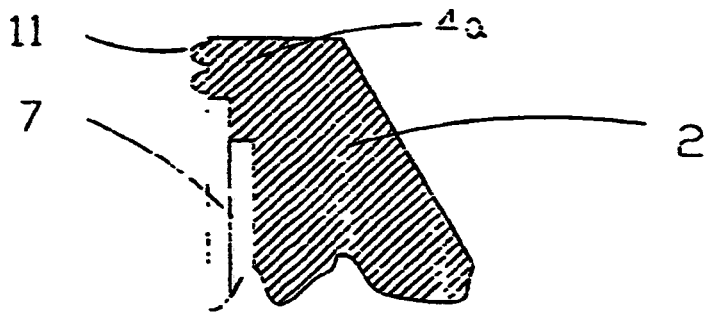

Fig. 8

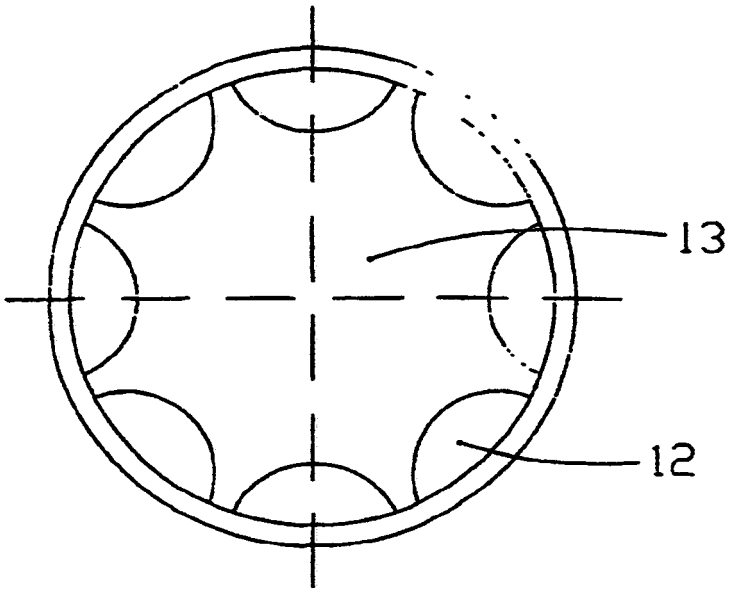

Fig. 9

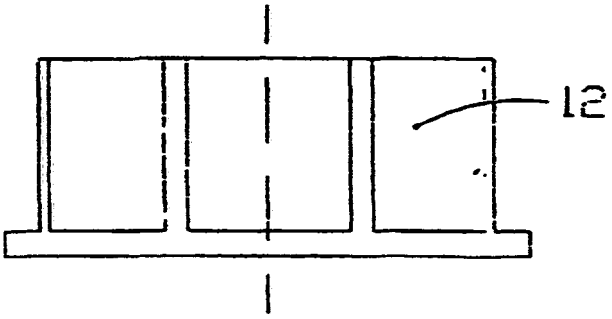

Fig. 10

REFERENCES CITED IN THE DESCRIPTION

This list of references cited by the applicant is for the reader's convenience only. It does not form part of the European patent document. Even though great care has been taken in compiling the references, errors or omissions cannot be excluded and the EPO disclaims all liability in this regard.

Patent documents cited in the description

- US 4854277 A **[0009]**