(19) Europäisches Patentamt
European Patent Office
Office européen des brevets

(11) EP 1 384 512 A8

(12) **CORRECTED EUROPEAN PATENT APPLICATION**
Note: Bibliography reflects the latest situation

(15) Correction information:
Corrected version no 1 (W1 A2)
Corrections, see page(s) 1
Corrected Kind of Document code A2
Previously published as A1

(48) Corrigendum issued on:
26.05.2004 Bulletin 2004/22

(43) Date of publication:
28.01.2004 Bulletin 2004/05

(21) Application number: **03016000.6**

(22) Date of filing: **14.07.2003**

(51) Int Cl.[7]: **B04B 5/04**

(84) Designated Contracting States:
AT BE BG CH CY CZ DE DK EE ES FI FR GB GR HU IE IT LI LU MC NL PT RO SE SI SK TR
Designated Extension States:
AL LT LV MK

(30) Priority: **17.07.2002 JP 2002207987**

(71) Applicant: **KABUSHIKI KAISHA KUBOTA SEISAKUSHO**
Toshima-ku Tokyo (JP)

(72) Inventor: **Minoru, Hara**
Fujioka-shi, Gunma (JP)

(74) Representative:
von Puttkamer, Nikolaus, Dipl.-Ing. et al
Franziskanerstrasse 38
81669 München (DE)

(54) **Rotor for centrifugal separator and adapter for centrifugal separator**

(57) A centrifugal separator includes a rotor (2B). In the rotor (2B), contact portions (32) each for coming into contact with an outer surface of the cap (6) of a sample tube (4) are formed in open end (31) sides of storing holes (3). The contact portions (32) respectively have notches (33) at portions thereof which face an axis (X). An adapter for a centrifugal separator is also disclosed.

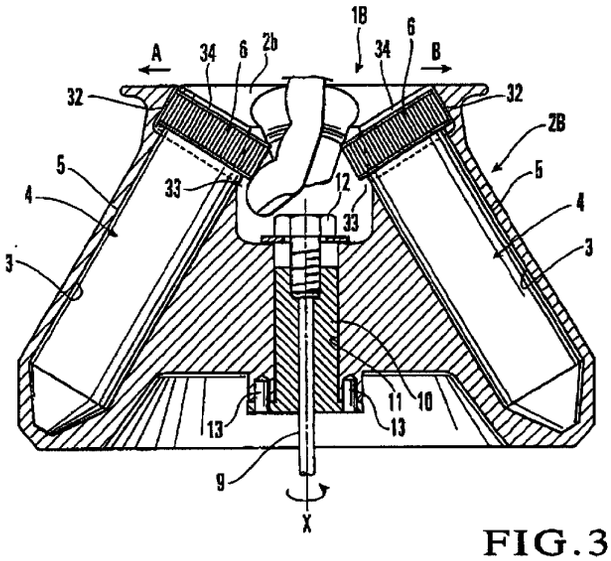

FIG.3

EP 1 384 512 A8