(19) Europäisches Patentamt
European Patent Office
Office européen des brevets

(11) EP 1 425 983 A1

(12) **EUROPEAN PATENT APPLICATION**

(43) Date of publication:
09.06.2004 Bulletin 2004/24

(51) Int Cl.[7]: **A44C 5/20**

(21) Application number: **03425603.2**

(22) Date of filing: **17.09.2003**

(84) Designated Contracting States:
AT BE BG CH CY CZ DE DK EE ES FI FR GB GR HU IE IT LI LU MC NL PT RO SE SI SK TR
Designated Extension States:
AL LT LV MK

(30) Priority: **20.09.2002 IT FI20020174**

(71) Applicant: **UNO-A-ERRE ITALIA S.p.A.**
I-52100 Arezzo (IT)

(72) Inventor: **Scatragli, Fortunato**
52100 Arezzo (IT)

(74) Representative:
Mannucci, Gianfranco, Dott.-Ing. et al
Ufficio Tecnico Ing. A. Mannucci S.R.L.,
Via della Scala 4
50123 Firenze (IT)

(54) **Fastening device for jewelry chains**

(57) The device comprises two hollow elements (3, 5) which are interpenetrating and axially slidable with respect to each other, forming a compartment (7) within which is placed a spring (9) which reacts to the axial sliding; each of said two elements (3, 5) has one end formed into a hook (3A, 5A) and the other end formed into a tab to form a base (38, 5B) on which the spring reacts by compression (9); when the two elements (3, 5) are joined together, each has its hook end (3A, 5A) closed against the base (3B, 5B) of the other element by the action of the spring (9).

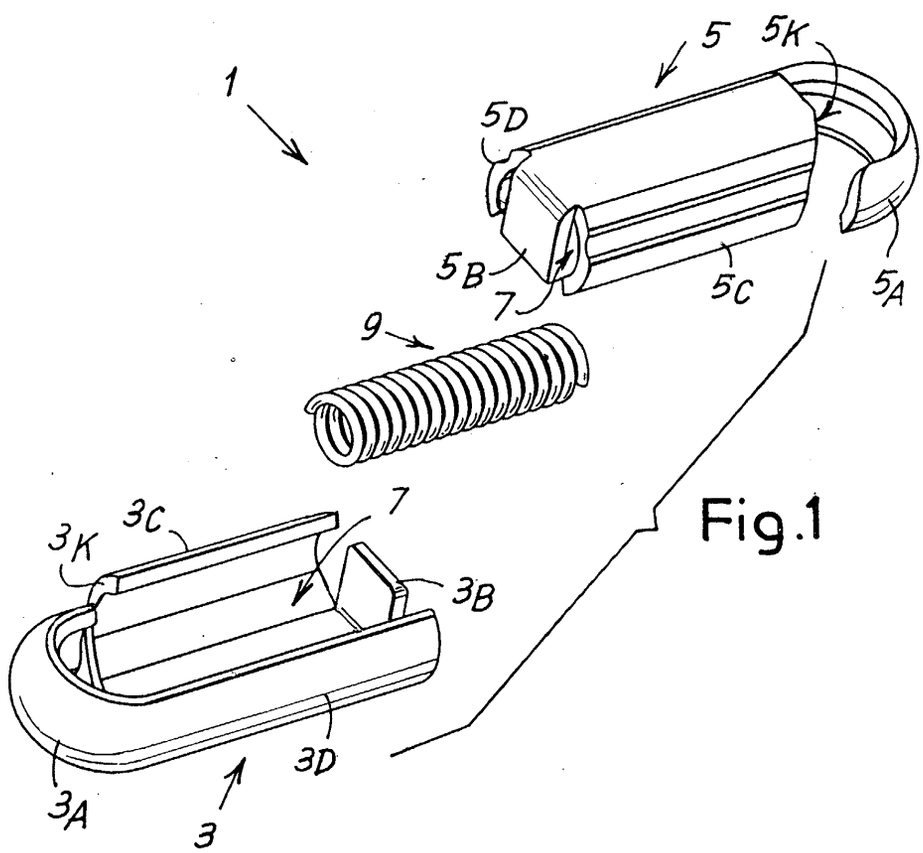

Fig.1

EP 1 425 983 A1

Description

[0001] The invention relates to the field of jewelry chains and the like, and, in particular, to a fastener for necklaces, bracelets or other items.

[0002] The object of the invention is to provide a fastener for chains which consists of a limited number of components, thus reducing its production costs, and which permits easy and simplified assembly, thus also reducing production time.

[0003] The device according to the invention comprises two hollow elements which are interpenetrating and axially slidable with respect to each other, and which when joined together form a compartment within which a spring is placed. Each of said two elements has one end formed into a hook and the other end formed into a tab bent to form a base on which the compression spring reacts. When the two elements are joined together, the hook end of each element is closed against the base of the other element by the action of the spring. A sliding action is therefore required to open the hooks. The ends of said spring press on the bases of the two elements, and the sliding of the two elements with respect to each other entails a further compression of the spring which tends to bring the two elements into the closed position.

[0004] The hollow interpenetrating elements can be formed in such a way that their outer surface is shaped to be cylindrical or prismatic with a polygonal or elliptical cross section.

[0005] The shapes and the operating mechanism of a fastening device according to the invention have the additional advantage of not requiring soldering, end pieces or joining links for application to a chain. The components can be made by cutting and bending, in other words by plastic forming.

[0006] The invention will be more clearly understood from the description and the attached drawing, which shows a practical example, without restrictive intent, of the invention. In the drawing,

Fig. 1 shows an exploded perspective view of a fastener according to the invention;
Figs. 2 and 3 show two perspective views of the fastener of Fig. 1 in the open and closed states;
Fig. 4 shows a plan view of the fastener according to the invention shown in Fig. 1;
Fig. 5 shows a view in the direction V-V of Fig. 4;
Fig. 6 shows a view in the direction VI-VI of Fig. 4;
Fig. 7 shows a view in the direction VII-VII of Fig. 4;
Fig. 8 shows a view in the direction VIII-VIII of Fig. 4;
Fig. 9 shows an exploded perspective view of a further embodiment of a fastener according to the invention;
Figs. 10 and 11 show two perspective views of the fastener of Fig. 9 in the open and closed states;
Fig. 12 shows a plan view of the fastener according to the invention shown in Fig. 9;
Fig. 13 shows a view in the direction XIII-XIII of Fig. 12;
Fig. 14 shows a view in the direction XIV-XIV of Fig. 12;
Fig. 15 shows a view in the direction XV-XV of Fig. 12;
Fig. 16 shows a view in the direction XVI-XVI of Fig. 12;
Fig. 17 shows a section through XVII-XVII of Fig. 12, in the closed state; and
Fig. 18 shows the section of Fig. 17 in the open state.

[0007] In the illustrations in the attached drawing, the numbers 1 and 101 indicate in a general way two fastening devices according to the invention. Each fastening device comprises two hollow flat elements 3 and 5 which are interpenetrating and slide axially with respect to each other. Said elements form a compartment 7 within which a spring 9 is placed. Each of said two elements 3, 5, 103 and 105 has one end 3A, 5A, 103A and 105A formed into a hook, while the other end 3B, 5B, 103B and 105B, formed into a tab, is bent to form a base.

[0008] Each of said hollow elements 3, 5, 103, 105 which are interpenetrating and slidable with respect to each other has two lateral parts 3C, 5C, 103C, 105C, 3D, 5D, 103D, 105D shaped to permit the two elements to be joined to each other and to permit the sliding of the two elements 3, 5, 103, 105 with respect to each other and to delimit the compartment 7 forming the housing for the spring 9. In the embodiment of the fastener according to the invention shown in the attached figures, the two elements 3, 5, 103, 105 are formed in such a way that the outer surface of the side of the element 5, 105 slides on the inner surface of the element 3, 103. The spring 9 is housed in the compartment 7, and reacts by compression between the two bases 3B, 5B, 103B, 105B.

[0009] When the two elements 3, 5 and 103, 105 are joined together, each of their corresponding hook ends 3A, 5A and 103A, 105A is closed against the base 3B, 5B and 103B, 105B of the other element as a result of the compressive thrust provided by the spring 9.

[0010] To open the device, it is necessary to act on it in the direction of the arrows F to cause said two hollow elements 3, 5, 103, 105 to slide against the action of the spring 9, thus reducing the length of the housing 7 of the spring 9 and increasing the compression of said spring 9. This action provides access to the shaped areas 3K, 5K or equivalent, designed to facilitate the insertion and removal of said terminal rings. When the action in the direction of the arrows F ceases, the spring 9 returns the two elements 3, 5, 103, 105 to the position in which the hooks 3A, 5A; 103A, 105A are closed.

[0011] This enables terminal rings of a chain to be inserted into the hooks 3, 5 and 103, 105 and extracted therefrom.

[0012] The sides of the hollow elements 3, 5 and 103, 105 can be formed in such a way that the outer surface

is cylindrical (see Figs. 9 to 16) or prismatic with a cross section which is polygonal (see Figs. 1 to 8) or possibly elliptical.

[0013] The shape and operating mechanism of a fastener for jewelry chains according to the invention are such that the fastener can be easily and conveniently applied to a chain without any need for soldering; it is simply necessary for two rings or links of a chain to be present at the ends to be fastened in order to engage the two hooks 3A, 5A, 103A, 105A with them.

[0014] The components of the fastener according to the invention can be made by cutting and bending, in other words by plastic forming of sheet material, and can be joined by snap fitting or by permanent deformation.

[0015] In addition to the advantageous characteristics mentioned above, a fastener according to the present invention can eliminate the use of end pieces and/or connecting links for application to a chain; can also be opened with equal ease at both its right and left ends; and, once assembled, can no longer be separated into its individual parts except by the use of suitable equipment.

[0016] Clearly, the drawing shows only an example provided solely as a practical demonstration of the invention, and this invention can be varied in its forms and arrangements without departure from the scope of the guiding principle of the invention. The presence of any reference numbers in the attached claims is intended to facilitate the reading of the claims with reference to the description and to the drawing, and does not limit the scope of protection represented by the claims.

Claims

1. A fastening device for jewelry chains, **characterized in that** it comprises two hollow elements (3, 5; 103, 105) which are interpenetrating and slidable with respect to each other, forming a compartment (7) within which a spring (9) is housed; each of said two elements (3, 5; 103, 105) has one end formed into a hook (3A, 5A; 103A, 105A) while the other end (3B, 5B; 103B, 105B) is bent to form a base, on which the spring (9) reacts by compression, thus pushing the device into the closed state.

2. Device according to Claim 1, **characterized in that** said hollow interpenetrating elements (3, 5; 103, 105) are formed in such a way that the outer surfaces of the sides (3C, 5C; 103C, 105C and 3D, 5D; 103D, 105D) are shaped to be cylindrical or prismatic with elliptical or polygonal cross section; said sides (3C, 5C; 103C, 105C and 3D, 5D; 103D, 105D) being shaped in such a way that the outer sides engage with the inner sides.

3. Device according to Claims 1 and 2, **characterized in that**, when the two elements (3, 5; 103, 105) are joined together, each has its corresponding hook end (3A, 5A; 103A, 105A) closed against the base (3B, 5B, 103B, 105B) of the other element by the action of the compressed spring (9).

4. Device according to at least one of the preceding claims, **characterized in that** the sliding of said two elements (3, 5; 103, 105) for opening the hooks requires an increase in the compression of the spring (9), which tends to bring the two elements (3, 5; 103, 105) into the position in which the hooks (3A, 5A; 103A, 105A) are closed against the bases (3B, 5B; 103B, 105B).

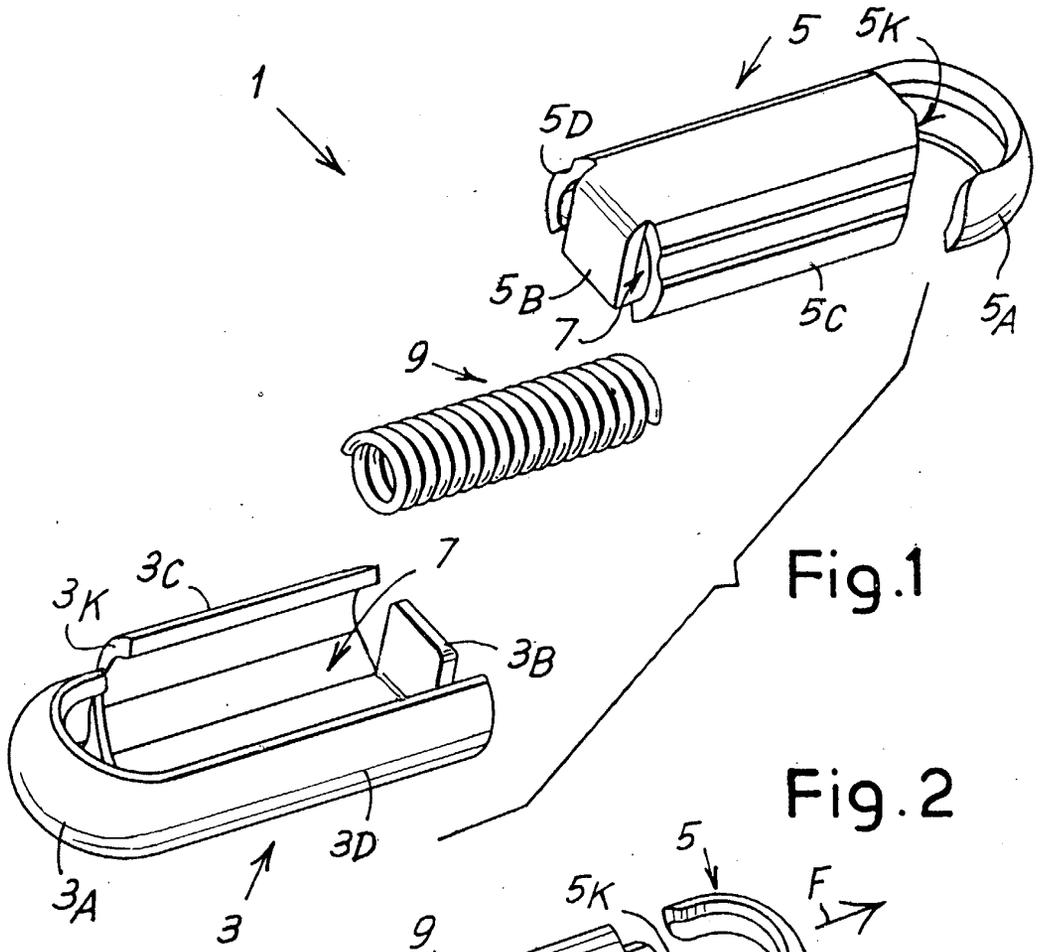

Fig.1

Fig.2

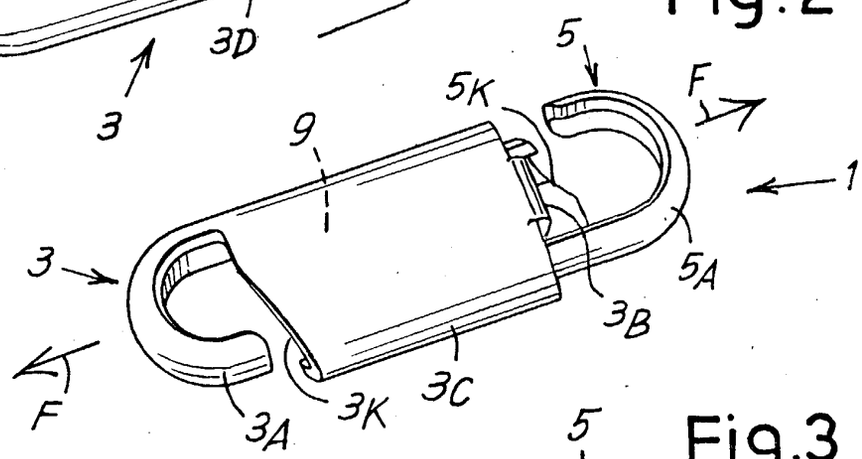

Fig.3

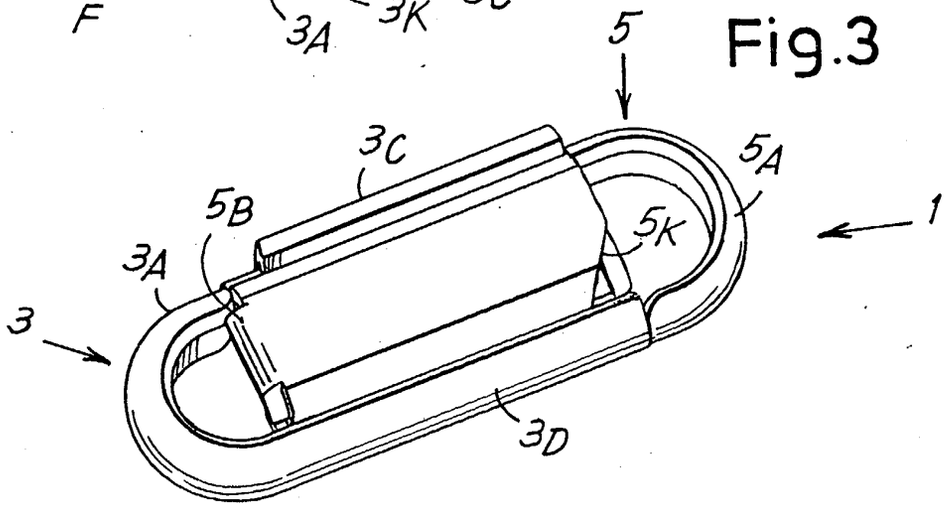

Fig.5

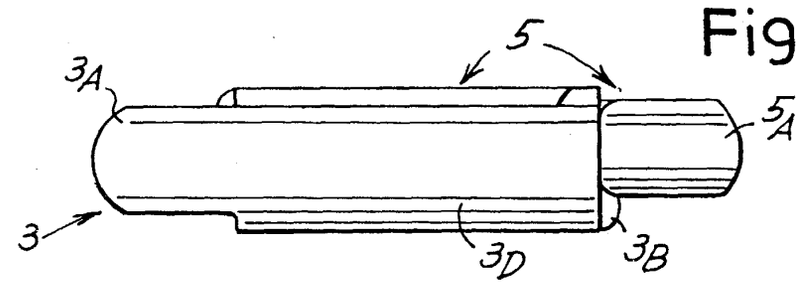

Fig.4

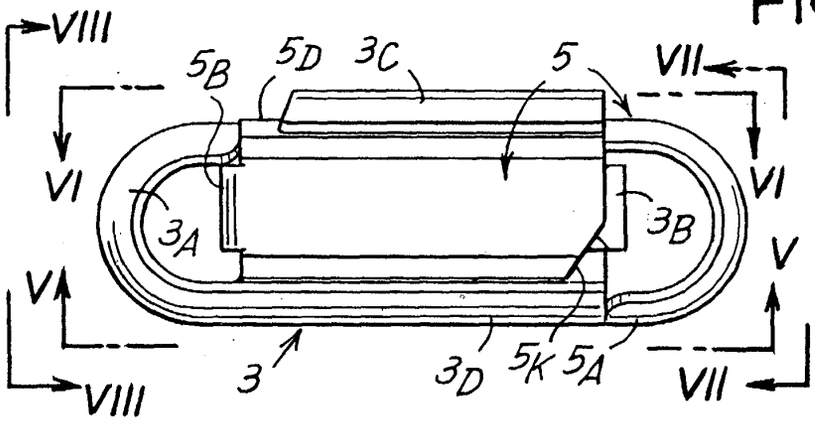

Fig.6

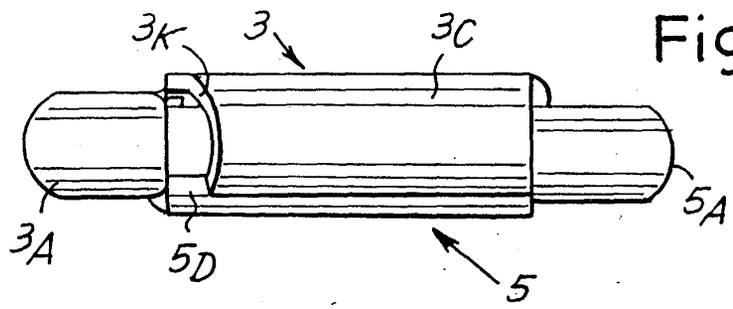

Fig.7

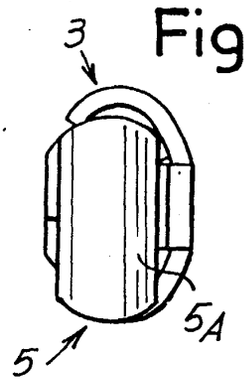

Fig.8

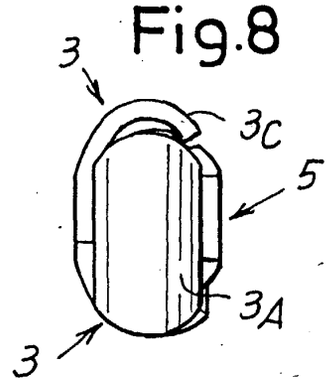

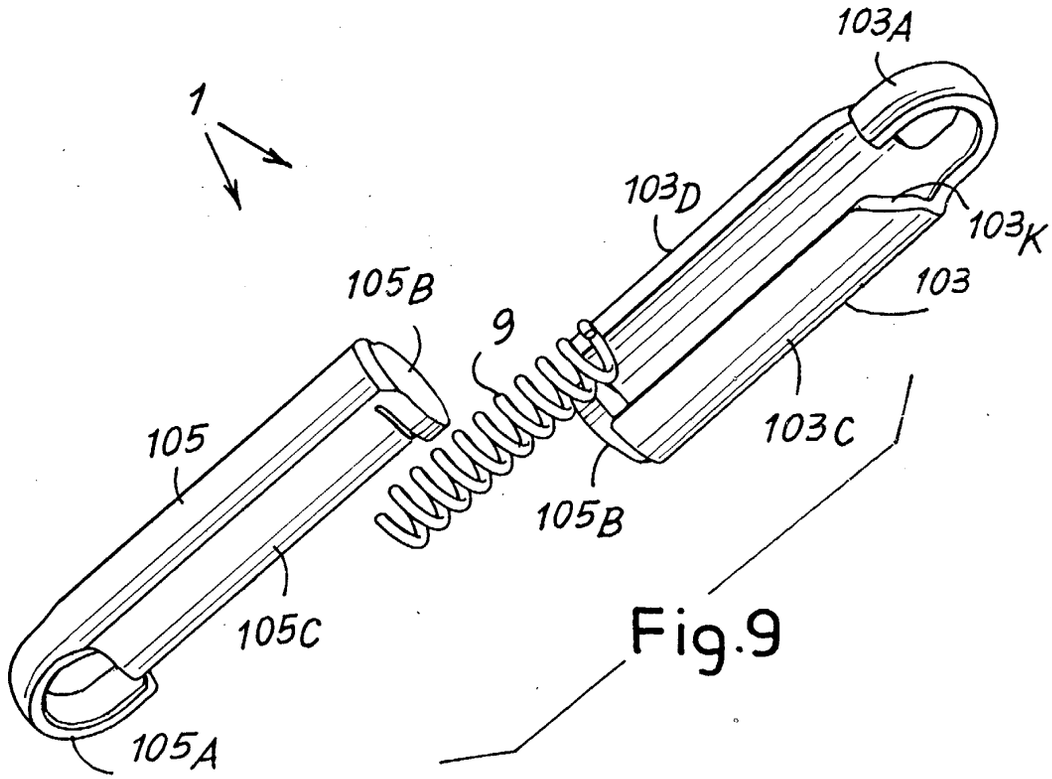

Fig.9

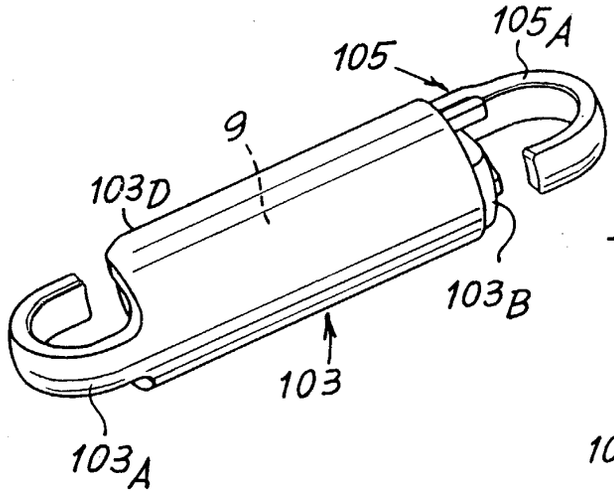

Fig.10

Fig.11

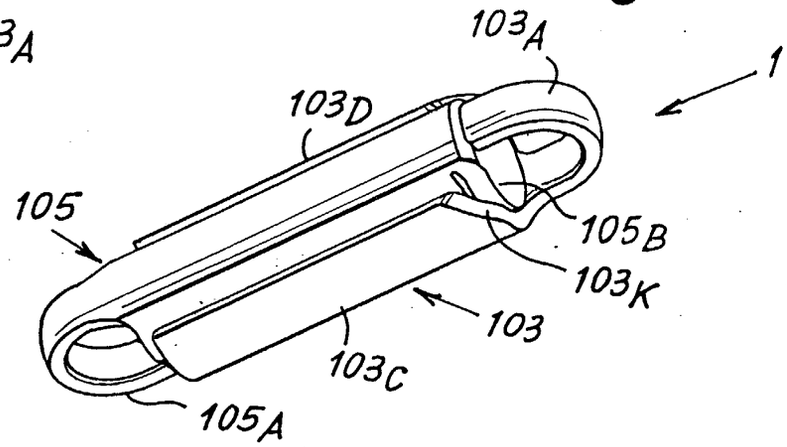

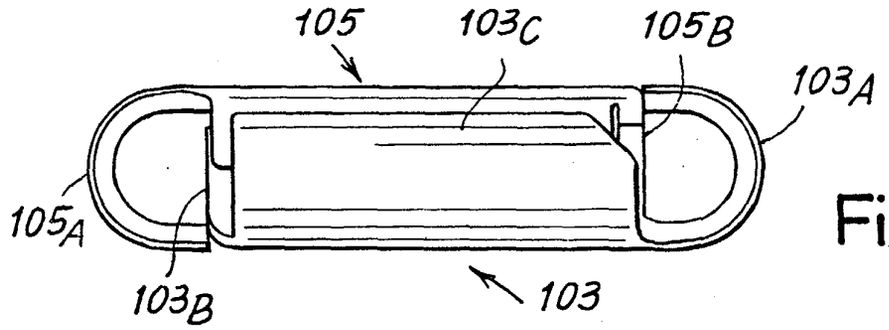

Fig.13

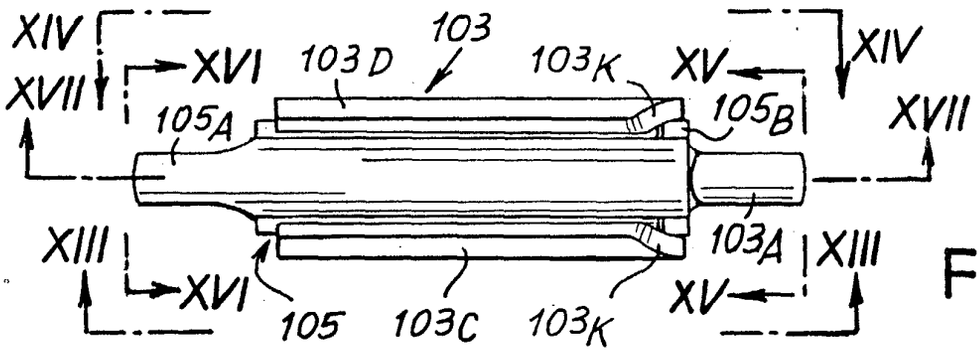

Fig.12

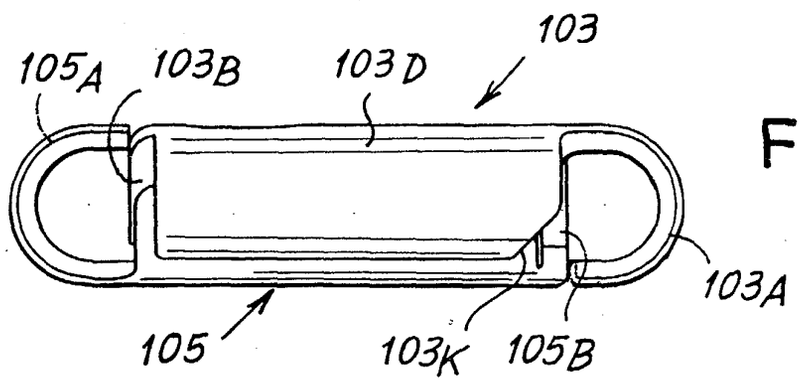

Fig.14

Fig.15

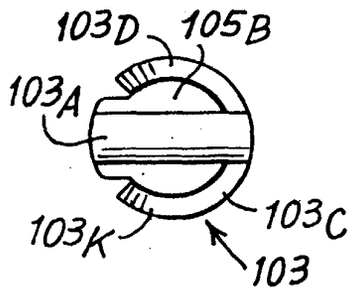

Fig.16

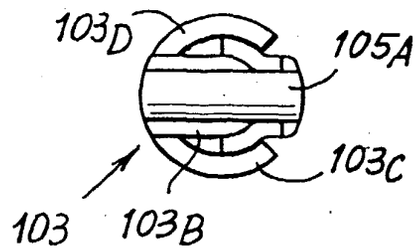

Fig.17

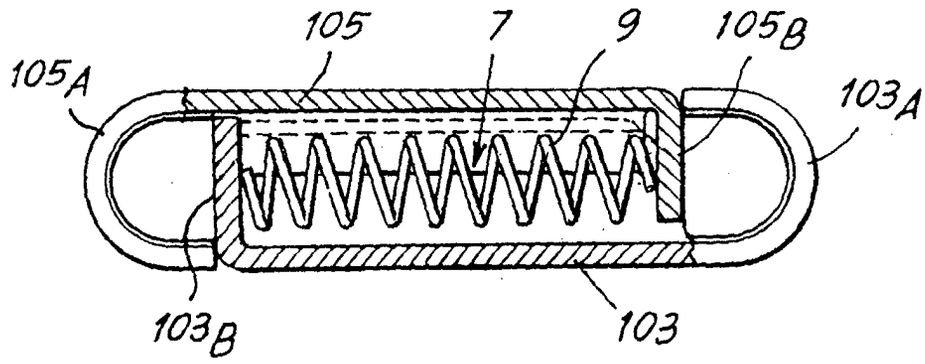
105
7
9
105B
105A
103A
103B
103

Fig.18

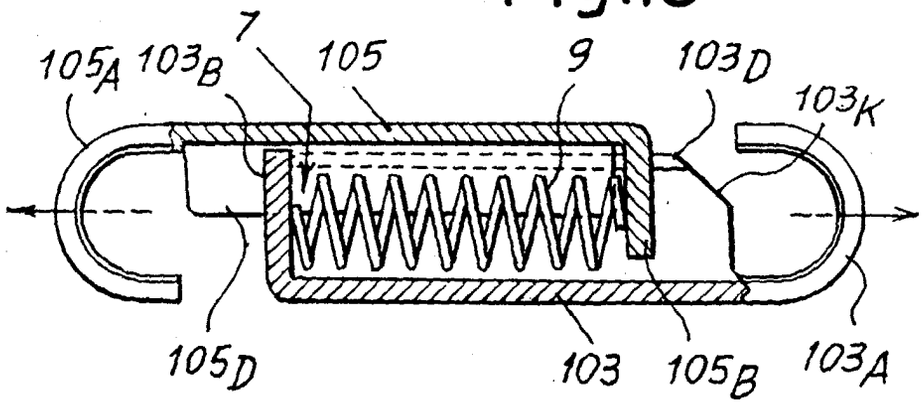
7
105A
103B
105
9
103D
103K
105D
103
105B
103A

European Patent Office

EUROPEAN SEARCH REPORT

Application Number
EP 03 42 5603

DOCUMENTS CONSIDERED TO BE RELEVANT

Category	Citation of document with indication, where appropriate, of relevant passages	Relevant to claim	CLASSIFICATION OF THE APPLICATION (Int.Cl.7)
X	GB 415 869 A (G. WALL) 6 September 1934 (1934-09-06) * the whole document * -----	1-4	A44C5/20
			TECHNICAL FIELDS SEARCHED (Int.Cl.7) A44C

The present search report has been drawn up for all claims

Place of search	Date of completion of the search	Examiner
THE HAGUE	1 December 2003	Garnier, F

CATEGORY OF CITED DOCUMENTS

X : particularly relevant if taken alone
Y : particularly relevant if combined with another document of the same category
A : technological background
O : non-written disclosure
P : intermediate document

T : theory or principle underlying the invention
E : earlier patent document, but published on, or after the filing date
D : document cited in the application
L : document cited for other reasons

& : member of the same patent family, corresponding document

EPO FORM 1503 03.82 (P04C01)

ANNEX TO THE EUROPEAN SEARCH REPORT ON EUROPEAN PATENT APPLICATION NO. EP 03 42 5603

This annex lists the patent family members relating to the patent documents cited in the above-mentioned European search report.
The members are as contained in the European Patent Office EDP file on
The European Patent Office is in no way liable for these particulars which are merely given for the purpose of information.

01-12-2003

Patent document cited in search report	Publication date	Patent family member(s)	Publication date
GB 415869 A	06-09-1934	NONE	

EPO FORM P0459

For more details about this annex : see Official Journal of the European Patent Office, No. 12/82