(19) Europäisches Patentamt
European Patent Office
Office européen des brevets

(11) EP 1 426 526 A3

(12) **EUROPEAN PATENT APPLICATION**

(88) Date of publication A3:
08.06.2005 Bulletin 2005/23

(43) Date of publication A2:
09.06.2004 Bulletin 2004/24

(21) Application number: **03026439.4**

(22) Date of filing: **20.11.2003**

(51) Int Cl.[7]: **E04G 13/02**, E04G 9/05, E04G 11/06

(84) Designated Contracting States:
AT BE BG CH CY CZ DE DK EE ES FI FR GB GR HU IE IT LI LU MC NL PT RO SE SI SK TR
Designated Extension States:
AL LT LV MK

(30) Priority: **22.11.2002 PT 10287502**

(71) Applicant: **CivilPlas-Aplicacoes Modulares, Lda.**
2431-956 Marinha Grande (PT)

(72) Inventors:
- **Silva, Hermino Costa da**
  Picassinos, 2430-463 Marinha Grande (PT)
- **Ramalhao, Emanuel Alcino Dias Martins**
  Picassinos, 2430-463 Marinha Grande (PT)
- **Jesus, Leonel de**
  Picassinos, 2430-463 Marinha Grande (PT)
- **Sousa, Rui Pedro Romero Amandi de**
  Picassinos, 2430-463 Marinha Grande (PT)
- **Rebelo, Antonio Joachim Ferreira**
  Picassinos, 2430-463 Marinha Grande (PT)

(74) Representative: **Alves Moreira, Pedro**
Rua do Patrocinio, 94
1399-019 Lisbon (PT)

(54) **Formwork**

(57) The present invention refers to a formwork and to the respective fixation components for construction of concrete pillars of circular or oval cross-section and support walls that are made of a rigid thermoplastic or composite material. The low density of the formwork allow its easy and inexpensive transportation inside and outside the construction site, as well as its manipulation and assembly by a single worker. The assembly of the components can be made around the steel structure that eases its use. This formwork produces a very good surface finishing of the pillar, avoiding the need of lubricating oils and reducing the finishing steps. This formwork can be disassembled after drying of the concrete and can be reused many times, which makes the ratio between unitary cost/number of times used very low.

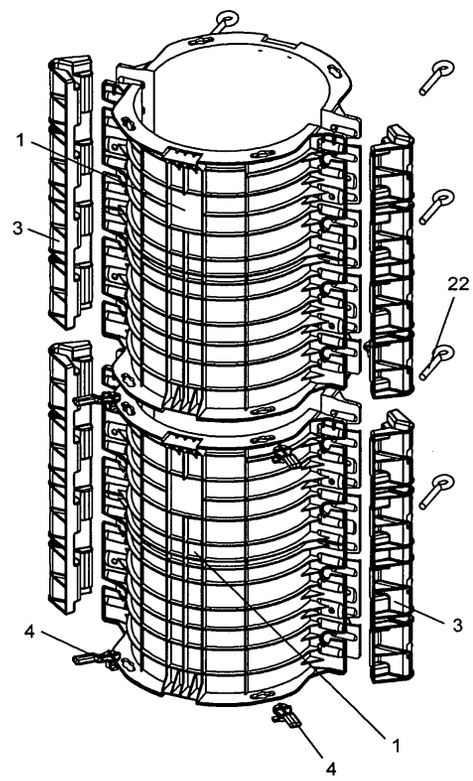

FIG.1

EP 1 426 526 A3

European Patent Office

EUROPEAN SEARCH REPORT

Application Number
EP 03 02 6439

DOCUMENTS CONSIDERED TO BE RELEVANT

Category	Citation of document with indication, where appropriate, of relevant passages	Relevant to claim	CLASSIFICATION OF THE APPLICATION (Int.Cl.7)
A	DE 199 47 487 A1 (HAHN BAUMASCHINEN GMBH) 5 April 2001 (2001-04-05) * the whole document *	1,5,6,12	E04G13/02 E04G9/05 E04G11/06
A	US 5 255 888 A (WORKMAN ET AL) 26 October 1993 (1993-10-26) * column 3, line 4 - column 4, line 68; figures 1-8 *	1,3,5,6, 10,16	
A	DE 94 10 525 U1 (NOE-SCHALTECHNIK GEORG MEYER-KELLER GMBH + CO, 73079 SUESEN, DE) 18 August 1994 (1994-08-18) * page 4, line 32 - page 7, line 36; claim 1; figure 1 *		
A	US 3 171 185 A (ANDERSON WILLIAM) 2 March 1965 (1965-03-02) * column 2, line 14 - column 5, line 36; figures 1-4 *	2,8,10, 13,14	
A	DE 14 09 954 A1 (GERHARDS,GUENTER) 12 December 1968 (1968-12-12) * page 3, line 6 - page 4, line 21; figures 1-3 *	1,4,5	TECHNICAL FIELDS SEARCHED (Int.Cl.7) E04G
A	DE 29 26 780 A1 (SCHLIEPHACKE, HEINRICH) 15 January 1981 (1981-01-15) * page 8, line 1 - page 11, line 5 *	2,6,7,9, 12	
A	US 3 357 673 A (WILLIAMS WALTER D) 12 December 1967 (1967-12-12) * figures 1,2 *	9-11	
A	DE 196 17 602 A1 (MAX FRANK GMBH & CO KG, 94339 LEIBLFING, DE; MAX FRANK GMBH & CO KG) 6 November 1997 (1997-11-06) * figures 3,4 *	4	

The present search report has been drawn up for all claims

Place of search	Date of completion of the search	Examiner
Munich	18 April 2005	Khera, D

CATEGORY OF CITED DOCUMENTS

X : particularly relevant if taken alone
Y : particularly relevant if combined with another document of the same category
A : technological background
O : non-written disclosure
P : intermediate document

T : theory or principle underlying the invention
E : earlier patent document, but published on, or after the filing date
D : document cited in the application
L : document cited for other reasons
.....
& : member of the same patent family, corresponding document

2

EPO FORM 1503 03.82 (P04C01)

ANNEX TO THE EUROPEAN SEARCH REPORT ON EUROPEAN PATENT APPLICATION NO. EP 03 02 6439

This annex lists the patent family members relating to the patent documents cited in the above-mentioned European search report.
The members are as contained in the European Patent Office EDP file on
The European Patent Office is in no way liable for these particulars which are merely given for the purpose of information.

18-04-2005

Patent document cited in search report		Publication date	Patent family member(s)		Publication date
DE 19947487	A1	05-04-2001	NONE		
US 5255888	A	26-10-1993	CA	2070090 A1	08-12-1992
DE 9410525	U1	18-08-1994	NONE		
US 3171185	A	02-03-1965	NONE		
DE 1409954	A1	12-12-1968	NONE		
DE 2926780	A1	15-01-1981	BR	8002996 A	23-12-1980
			ES	8101177 A1	01-03-1981
US 3357673	A	12-12-1967	NONE		
DE 19617602	A1	06-11-1997	NONE		

EPO FORM P0459

For more details about this annex : see Official Journal of the European Patent Office, No. 12/82