(19) Europäisches Patentamt
European Patent Office
Office européen des brevets

(11) EP 1 469 702 B1

(12) **EUROPEAN PATENT SPECIFICATION**

(45) Date of publication and mention of the grant of the patent:
23.11.2016 Bulletin 2016/47

(51) Int Cl.:
H04R 25/00 *(2006.01)*

(21) Application number: **04006073.3**

(22) Date of filing: **15.03.2004**

(54) **Feedback suppression**

Rückkopplungsunterdrückung

Suppression de la réaction acoustique

(84) Designated Contracting States:
CH DE DK LI

(43) Date of publication of application:
20.10.2004 Bulletin 2004/43

(73) Proprietor: **Sonova AG**
8712 Stäfa (CH)

(72) Inventor: **Roeck, Hans-Ueli**
8634 Hombrechtikon (CH)

(74) Representative: **Troesch Scheidegger Werner AG**
Schwäntenmos 14
8126 Zumikon (CH)

(56) References cited:
EP-A- 0 656 737 **EP-A- 1 080 606**
WO-A-00/19605 **WO-A-00/33634**

- **HERBORDT W ET AL: "Computationally Efficient Frequency-Domain Combination of Acoustic Echo Cancellation and Robust Adaptive Beamforming" PROCEEDINGS EUROSPEECH, vol. 2, September 2001 (2001-09), pages 1001-1004, XP007004503 AALBORG, DANMARK**
- **HSIANG-FENG CHI, SHAWN X. GAO, SIGFRID D. SOLI, ABEER ALWAN: "Band-limited feedback cancellation with a modified filtered-X LMS algorithm for hearing aids" SPEECH COMMUNICATION, vol. 39, no. 1-2, January 2003 (2003-01), pages 147-161, XP002295470 ELSEVIER SCIENCE**
- **MAXWELL J A ET AL: "REDUCING ACOUSTIC FEEDBACK IN HEARING AIDS" IEEE TRANSACTIONS ON SPEECH AND AUDIO PROCESSING, IEEE INC. NEW YORK, US, vol. 3, no. 4, 1 July 1995 (1995-07-01), pages 304-313, XP000633074 ISSN: 1063-6676**
- **HOSHUYAMA O ET AL: "A ROBUST ADAPTIVE BEAMFORMER FOR MICROPHONE ARRAYS WITH A BLOCKING MATRIX USING CONSTRAINED ADAPTIVE FILTERS" IEEE TRANSACTIONS ON SIGNAL PROCESSING, IEEE, INC. NEW YORK, US, vol. 47, no. 10, October 1999 (1999-10), pages 2677-2684, XP000947154 ISSN: 1053-587X**

Note: Within nine months of the publication of the mention of the grant of the European patent in the European Patent Bulletin, any person may give notice to the European Patent Office of opposition to that patent, in accordance with the Implementing Regulations. Notice of opposition shall not be deemed to have been filed until the opposition fee has been paid. (Art. 99(1) European Patent Convention).

EP 1 469 702 B1

Description

[0001] The present invention deals with a method for suppressing feedback between an acoustical output of an electrical/acoustical output converter arrangement- also called "output converter" - and an acoustical input of a acoustical/electrical input converter arrangement - also called "input converter" - of a hearing device, wherein acoustical signals impinging on the input converter arrangement are converted into a first electrical signal, by a controllably variable transfer characteristic and which is dependent on the angle at which said acoustical signals impinge on the input converter. The first electrical signal is processed and a resulting signal is applied to the output converter. There is further provided an electrical feedback-compensating signal, generated in dependency of the result signal which is applied via a feedback signal path upstream the processing.

Definition

[0002] A unit to which the output of the input converter is input and which provides a signal transfer characteristic to its output which has an amplification dependent on spatial angle at which acoustical signals impinge on the acoustic input of the input converter is called a beamformer unit. The transfer characteristic in polar representation is called the beam.

[0003] An adaptive beamformer unit is a beamformer unit, the beam generated therefrom being controllably variable.

[0004] From the EP 0 656 737 and the WO 00/19605 there is known such a method which nevertheless does not apply beamforming. The input of a feedback-compensator is operationally connected to the input of the output converter of the device, the output of the feedback-compensator is operationally connected to the output of the input converter, thereby forming a feedback signal path.

[0005] Due to the complex task of estimating the acoustical feedback signal to be suppressed e.g. by correlation at the feedback-compensator, the feedback-compensation process has a relatively long adaptation time constant to adapt from one feedback situation to be suppressed to another by appropriately varying its gain. Such an adaptation time constant is customarily in the range of hundreds of milliseconds.

[0006] Acoustical feedback signals to be suppressed impinge upon the input converter substantially from distinct spatial angles. As schematically shown in Fig. 1, a behind-the-ear hearing device 3 with an input converter 5 applied at the pinna 1 of an individual, experiences acoustical feedback signals to be suppressed from a distinct direction as shown at d1. An in-the-ear hearing device 7 according to Fig. 2 which has, as an example, a vent 9 and two acoustical ports 11 to the input converter, experiences acoustical feedback signals to be suppressed from the distinct directions d2.

[0007] Therefore, a further approach for suppressing acoustical feedback is to install high signal attenuation between the input and the output converters of the device for signals which impinge on the input converter under such distinct spatial angles. This accords with applying a beamformer technique generating a beam having zero or minimum amplification at such angles.

[0008] Hearing devices which have adaptive beamformer ability are known e.g. from the WO 00/33634. For acoustical feedback suppression at a hearing device with adaptive beamforming ability, it seems, at first, quite straight forward to combine on the one hand feedback-compensation techniques as e.g. known from the EP 0 656 737 or the WO 00/19605 with adaptive beamformer technique as e.g. known from the WO 00/33634 and thereby to place minimum amplification of the beam at those angles which are specific for acoustical feedback signals to be suppressed impinging on the input converter. This especially because these angles are clearly different from the target direction range within which maximum amplification of the beam is to be variably set.

[0009] Thereby, it has to be noted that the adaptation time constant of an adaptive beamformer unit is considerably smaller, in the range of single to few dozen milliseconds, than the adaption time constant of a feedback-compensator which is, as mentioned above, in the range of hundreds of milliseconds.

[0010] One approach is known where a beamformer unit is provided, the input thereof being operationally connected to two mutually distant microphones of an input converter. As both spaced apart microphones experience the feedback signal to be suppressed differently, two feedback-compensators are provided with inputs operationally connected to the input of the output converter. The respective output signals are superimposed to the respective output signals of the two microphones.

[0011] The fact that the adaptation time constant of the beamformer unit is much shorter than the adaptation time constant of the compensators does not pose a problem in this configuration, because the fast adapting beamformer unit is placed within the closed feedback loop formed by the feedback-compensation feedback paths.

[0012] Nevertheless, this known approach has the serious drawback that for each of the microphones one compensator feedback path must be provided which unacceptably raises computational load.

[0013] A further approach for beamformer/feedback-compensation combination is known from M. Brandenstein et al. "Microphone arrays", Springer Verlag 2001. Here the feedback-compensation path is fed back to the output of the beamformer unit. By this approach only one compensation path is necessary and thus computational load is reduced. Nevertheless, here the fast adapting beamformer is outside the negative feedback loop. Thus, whenever the adaptive beamformer is controlled to rapidly change its beam pattern, the compensator will not be able to adequately rapidly deal with the new situation of feedback to be suppressed.

[0014] Therefore, M. Brandenstein et al. "Microphone arrays" considers this approach as, at least, very difficult to realise.

[0015] A third approach is proposed in M. Brandenstein et al. as mentioned and in W. Herboldt et al. "Computationally efficient frequency domain combination of acoustic echo cancellation and robust adaptive beamforming". A generalised side lobe cancelling technique for the beamformer is used whereat only a not-adaptive beamformer is placed upstream the compensation feedback path, thus eliminating the adaptation time problem as well as double computational load. Nevertheless, by this approach placing minimum amplification of the beam in the direction of acoustical feedback signal arrival may not be realised.

[0016] It is an object of the present invention to provide a method for suppressing acoustical feedback as addressed above at a hearing device which has an adaptive beamformer on the one hand, and a feedback-compensator on the other hand, thereby avoiding the drawbacks as addressed above.

[0017] This is achieved on the one hand by superimposing the fed back feedback-compensating signal to the signal downstream the beamforming, and, on the other hand, by controlling the adaptation rate of beamforming in dependency of the gain along feedback signal path with the compensator.

[0018] Thus, there is proposed a method for suppressing acoustical feedback between an acoustical output of an electrical/acoustical output converter arrangement and an acoustical input of an acoustical/electrical input converter arrangement of a hearing device, wherein acoustical signals impinging on the input converter arrangement are converted into a first electric signal by a controllably variable transfer characteristic which is dependent on the angle at which said acoustical signals impinge on said input converter arrangement. The first electric signal is processed and a resulting signal is applied to the output converter. The acoustical feedback to be suppressed is compensated by a feedback-compensating signal which is generated in dependency of the resulting signal and is fed back by a feedback signal path to a location along the signal path upstream the processing. Thereby, the feedback-compensating signal is fed back to the first electric signal - thus downstream the beamformer - and the adaptation rate of converting to variations of the transfer characteristic - and thus of beamforming - is controlled in dependency of gain along the feedback-compensator feedback signal path.

Definition

[0019] We understand by the adaptation rate of the adaptive beamformer unit the speed with which the beamformer unit reacts on an adaptation command to change beamforming operation as e.g. changing target enhancement or noise suppression direction. The adaptation rate accords with an adaptation time constant to change from one beamforming polar pattern to another.

[0020] We understand by the adaptation rate of feedback-compensating the rate with which the respective feedback-compensator reacts on a detected change of acoustical feedback situation until the compensator has settled to a new setting. The compensator thereby estimates the prevailing situation of feedback to be suppressed e.g. by a correlation technique between the signal applied to the output converter and the signal received from the input converter as e.g. described in the EP 0 656 737. The adaptation rate of the compensator accords with an adaptation time constant too. Whenever the loop gain along the feedback-compensating feedback signal path increases, this is caused by an increasing amount of acoustical feedback to be suppressed and thus to be compensated. This means that the adaptation rate of the beamformer unit is to be slowed down so that the feedback-compensator feedback signal may model the response of the beamformer unit too. Thus, in a preferred embodiment, the adaptation rate of converting, i.e. of beamforming, is slowed down with increasing loop gain along the feedback signal path.

[0021] As was addressed above, feedback signals, which are acoustical and which have to be suppressed, impinge on the acoustical input of the input converter arrangement substantially and dependent on the specific device at specific angles. Thus, in a most preferred embodiment of the method according to the present invention, amplification of the transfer characteristic representing beamforming is minimized at one or more than one specific angles which accord to angles at which the feedback to be suppressed predominantly impinges on the input converter arrangement.

[0022] Thus, and considered in combination with slowing down the adaptation rate of beamforming with increasing gain along feedback-compensation feedback signal path, it becomes apparent that the compensator may still model the beamformer without losing the established minimum or minima in the direction of the said specific angles.

[0023] Further, it has to be noted that the acoustical feedback to be suppressed is a narrow band acoustical signal, thus in a further improvement of the method according to the present invention, it is not necessary - so as to deal with an acoustical feedback to be suppressed - to control and especially to slow down the adaptation rate of beamforming conversion in the entire frequency range beamforming is effective at, but it suffices to controllably adapt the adaptation rate of the beamforming conversion at frequencies which are significant for the acoustical feedback signal to be suppressed. Therefore, in a further preferred embodiment of the present invention, controlling of the adaptation rate of the beamforming conversion is performed frequency selectively.

[0024] In spite of the fact that the principal according to the present invention may be applied at hearing devices where signal processing is performed in analog technique, it is preferred to perform the method in devices

where signal processing is performed digitally. Thereby, and in view of the addressed preferred frequency selective control, in a most preferred embodiment, at least signal processing in the beamforming conversion as well as along the feedback-compensation feedback signal path, is performed in frequency domain, whereby time domain to frequency domain conversion may be realised in a known manner, be it by FFT, DCT, wavelet transform or other suitable transforms. The respective re-conversion for the signal applied to the output converter is performed with the respective inverse processes. The adaptation rate is controlled at selected frequencies in dependency of the feedback-compensator gain at these selected frequencies. Thereby the following approach is achieved:

[0025] As beamforming is only effective with respect to the acoustical feedback to be suppressed at specific frequencies or at a specific frequency band on the one hand the control of the adaptation rate of beamforming is in fact only to be performed at these specific frequencies or for the addressed frequency band. Further, selecting minimum amplification at the specific feedback impingement angles must be provided at the beamformer only for the specific frequencies or for the frequency band of the feedback to be suppressed too. Thus, this leads to the recognition that in fact beamforming may be subdivided in beamforming for frequencies which are not significant for the acoustical feedback to be suppressed and beamforming for frequencies or the frequency band which is specific for the acoustical feedback signal to be suppressed. Thus, beamforming in the addressed specific frequencies may be performed and its adaptation rate controlled independently from tailoring beamforming at frequencies which are not specific for the acoustical feedback signal to be suppressed. This beamforming may be performed at adaption rates which are independent from feedback-compensation and thus faster and which generates a beam which is not dealing with the specific impinging angles of the acoustical feedback signal to be suppressed.

[0026] Therefore, in a further preferred embodiment of the method according to the present invention, performing controlling of beamforming is done selectively at frequencies which are significant for the acoustical feedback to be suppressed. Further preferred minimalising the amplification of the beamforming transfer characteristic is only done at specific angles in a frequency selective manner. In fact two independent beamforming actions are superimposed, a first dealing with the generically desired beamforming behaviour, a second dealing with acoustical feedback-suppression as concerns frequencies and as concerns beamshaping. It becomes possible e.g. to switch off first beamforming, thereby maintaining the second and thereby preventing acoustical feedback to become effective. The method according to the present invention may be applied to behind-the-ear hearing devices or to in-the-ear hearing devices, monaural or binaural systems, and further may be applied to such devices which are conceived as ear protection devices i.e. protecting the human ear from excess acoustical load, or to hearing improvement devices be it just to improve or facilitate hearing by an individual, or in the sense of a hearing aid, to improve hearing of a hearing impaired individual.

[0027] It is to be noted that feedback caused not by acoustical but by electrical or mechanical reasons is often fed into the microphones of the input converter with equal gains and phases, thus appearing to originate from a direction perpendicular to the port axis of the input converter arrangement. In an endfire array, as typically used in hearing instruments, this conforms to a 90° direction or arrival, and may be suppressed by a technique according to the present invention as well.

[0028] Thus, when we speak of "acoustical feedback" to be suppressed we understand also such other feedback fed into the microphones.

[0029] To resolve the object as mentioned above, there is further, and according to the present invention, provided a hearing device which comprises:

- an acoustical/electrical input converter arrangement and a adaptive beamformer unit generating at an output an electric output signal dependent on acoustical signals impinging on said acoustical/electrical input converter arrangement and in dependency of angle at which said acoustical signals impinge, said beamformer unit having a first control input for varying beamforming characteristics and a second control input for controllably adjusting adaptation rate;

- a processing unit with an input operationally connected to the output of said beamformer unit with an output operationally connected to an input of an electrical/acoustical output converter arrangement;

- a feedback-compensator unit, the input thereof being operationally connected to said input of said electrical/acoustical output converter arrangement, the output thereof being operationally connected to the input of said processing unit and having a loop gain output, said loop gain output being operationally connected to said second control input of said beamformer unit.

[0030] Preferred embodiments of the method according to the present invention, as well as of a hearing device according to the present invention, shall additionally become apparent from the following detailed description of preferred embodiments with the help of further figures and from the claims. The figures show:

Figs. 1 & 2: as discussed above, schematically specific angles at which acoustical feedback signals impinge on the acoustical input port of outside-the-ear (Fig. 1) and in-the-ear (Fig. 2) hearing devices.

Fig. 3: by means of a simplified functional block/signal flow-diagram, a device according to the present invention operated according to the method of the present invention.

Fig. 4: in polar diagram representation preferred beamforming at the device according to Fig. 3 taking into account specific angles with which the acoustical feedback to be suppressed impinges on the acoustic input as exemplified in the Figs. 1 or 2.

Fig. 5a: as an example and quantitatively, beamforming by the device of Fig. 3 at specific frequencies which are significantly present in the feedback signal to be suppressed.

Fig. 5b: beamforming at the device of Fig. 3 for frequencies which are not significantly present in the feedback signal to be suppressed.

[0031] In Fig. 3 there is schematically shown, by means of a signal flow-/functional block-diagram a device according to the present invention, whereat the method according to the invention is realised. The device comprises an acoustical/electrical input converter arrangement 10, which cooperates with a beamformer unit 12. The conversion characteristics of the input converter 10 together with signal processing in beamformer unit 12 provides a beamformer characteristic between acoustical input E_{10} to input converter 10 and electrical output A_{12} of the beamformer unit 12. The beamformer unit 12 has an adaptation control input C_{12A} and an adaptation rate control input C_{12R}.

[0032] The transfer characteristic between E_{10} and A_{12} has an amplification which is dependent on the angle α at which acoustical signals impinge on the acoustical port of input converter 10. Thus, there is generated by the combined units 10 and 12 a beam characteristic as exemplified with B in unit 12.

[0033] As further schematically shown by the variation arrow V within block 12, the transfer characteristic, in polar representation the beam B, may be varied with respect to its characteristics as e.g. with respect to target direction, maximum amplification etc. as shown in dotted line within block 12. Variation of the beam characteristic B is controlled by control input C_{12A} which latter is, as shown in dotted line, normally connected to a processing unit 14 for adapting the beam characteristic B e.g. to prevailing acoustical situations automatically or program controlled or by an individual wearing the hearing device. Beamforming units which may be adapted are known. One example thereof is described in the WO 00/33634.

[0034] Variation of the beam characteristic B may also be, caused at the beamformer itself, i.e. by beamformer internal reasons.

[0035] Therefore, it must be emphasised that the input C_{12A} and control signals applied thereto are merely a schematic representation of beam characteristic variation ability or occurrence.

[0036] The electrical output of beamforming unit 12, A_{12}, is operationally connected to an input E_{14}, of the signal processing 14 unit whereat input signals are processed and output at an output A_{14} operationally connected to an electric input E_{16} of an output electrical/acoustical converter arrangement 16 so as to provide desired ear protection or hearing improvement to the individual carrying such device. We understand under ear protecting ability the ability of reducing or even cancelling acoustical signals which impinge on the input converter arrangement 10, so as to protect individual's hearing or even provide the individual with silent perception in non-vanishing acoustical surrounding. Under hearing improvement, we understand the improvement of individual's hearing in an acoustical surrounding, be it for customary applications of normal hearing individual or be it in the sense of hearing aid to improve individual's impaired hearing.

[0037] As perfectly known to the skilled artisan, one ongoing problem in context with such hearing devices is the acoustical feedback AFB between the acoustical output of the output converter 16 and acoustical input E_{10} of the input converter 10. As principally known e.g. from the EP 0 656 737, there is provided a feedback-compensator 18 whereat the prevailing acoustical feedback AFB, which is to be suppressed, is estimated e.g. with a correlation technique, correlating the signal applied to output converter 16 with a signal dependent on the output of input converter 10 as shown in dashed line at A. Thereby the gain G of feedback-compensator 18 is estimated so a to compensate for the AFB by negative feedback.

[0038] By means of feedback-compensator 18, a signal as predicted is fed back to the input of processor unit 14 downstream the output of beamformer unit 12 so as to compensate for the feedback AFB. As shown in Fig. 3, the feedback-compensator 18 has an input E18 which is operationally connected to the output A_{14} of the processing unit 14 and has an output A_{18} which is superimposed to the output E_{12} of beamformer unit 12, the result of such superimposing at a unit 20 being input to input E_{14} of processing unit 14.

[0039] Customarily, the feedback-compensator 18, which computes estimation of the acoustical feedback to be suppressed, has an adaptation rate in the range of several hundred ms and is thus considerably slower than the adaptation rate of beamforer unit 12. Thus without additional measures according to the present invention, whenever the beamformer unit 12 is controlled or caused to vary its beamforming characteristic B as schematically represented by a control at input C_{12A}, the feedback-compensator 18 will not be able to accurately rapidly deal with the varied situation with respect to acoustical feedback AFB.

[0040] Therefore, there is provided a control of the adaptation rate of beamformer unit 12 which control is performed by the feedback-compensator 18, according to

Fig. 3 at control input C_{12R}. Whenever the feedback signal loop gain via feedback-compensator 18 rises, indicating the increase in acoustical feedback AFB to be suppressed, the adaptation rate or time constant of beamformer unit 12 is lowered to or below the adaptation rate of compensator unit 18.

[0041] The loop gain may at be least estimated e.g. by multiplying the linear gains along the loop, primarily consisting of the feedback-compensator 18 and the processing unit 14 in Fig. 3 or by adding these gains in dB.

[0042] Thereby, it is prevented that an adjustment of the beamformer unit 12 with respect to its beamforming characteristic B may not be dealt with by compensator unit 18.

[0043] Thus, in fact, adaptation rate control of beamformer unit 12 is performed in dependency of the loop gain along the feedback loop with feedback-compensator 18. The rate control input C_{12R} to beamforming unit 12 is operationally connected to a loop gain output A_G of feedback-compensator 18. With the embodiment according to the present invention as shown in Fig. 3, it becomes possible to slow down the adaptation rate of the beamformer unit 12 at least down to the adaptation rate of the feedback-compensator 18 in dependency of prevailing feedback thereof.

[0044] Thereby, combination of adaptive beamforming and feedback compensating becomes feasible.

[0045] As has already been mentioned, the direction with which acoustical feedback signals AFB to be suppressed impinge on the acoustical port of the input converter 10 is specific. Therefore, at the beamformer unit 12, there is generated a beam characteristic B_{AFB}, as shown in Fig. 4, which has minimum amplification for these specific angles or, as shown e.g. for an in-the-ear hearing device, at two specific angles α_{AFB}. Thus and in addition to compensation of AFB by feedback-compensator 18, beamforming is realised with minimum amplification for those spatial angles α_{AFB} with which the acoustical feedback AFB to be suppressed impinges on the input converter 10.

[0046] Further, it has to be noticed that acoustical feedback AFB to be suppressed occurs substantially within a specific frequency band. This frequency band is dependent, among others, on the specific output converter 16 used, the type of device e.g. in-the-ear or outside-the-ear device. Therefore, in a further improved embodiment, overall feedback-suppression may be performed within that specific frequency band, thereby leaving beamforming in frequencies not within this specific frequency band unaffected and tailored according to needs different from acoustic feedback-suppression. According to Fig. 5 (a), beamforming B_{AFB} for minimum amplification of acoustical feedback AFB to be suppressed, is performed frequency selectively for frequencies f_{AFB} of the acoustical feedback signal AFB.

[0047] Beamforming for frequencies $f_{\overline{AFB}}$ which are not significantly present in the acoustical feedback AFB is performed by a second beamforming $B_{\overline{AFB}}$ which may be selected independently from B_{AFB}, according to fig. 5(b).

[0048] In fact, two independent beam forms are superimposed each operating in respective, distinct frequency-bands. Frequency selective feedback-compensation and adaptation beamforming may easily be realised, if at least beamforming in unit 12 as well as feedback-compensation in feedback-compensator 18 are performed in frequency domain or, respectively, in sub-bands. Beamforming is then realised at the frequencies f_{AFB} with minimum amplification at the specific angles α_{AFB}, whereas beamforming at other frequencies $f_{\overline{AFB}}$ is performed according to other needs. Consequently the adaptation rate of beamforming in unit 12 is only controlled by the gain of feedback-compensator 18 at the frequencies f_{AFB}.

[0049] Thus, even when beamforming $B_{\overline{AFB}}$ is switched off to minimum overall amplification, beamforming B_{AFB} may be maintained active to suppress acoustical feedback also in such "quiet" mode. Thereby, and with an eye on processing in frequency domain, in each sub-band, which is significant for AFB, the loop gain, as estimated in feedback-compensator 18, may be compared with a threshold value and adaptation rate control at C_{12R} is only established, if the instantaneous loop gain at least reaches such threshold. The control of the adaptation rate may then be lowered to practically zero, which means that beamforming is switched off for frequencies f_{AFB}. This establishes a hard on/off-switching of beamforming in the f_{AFB} frequency-range. In a further approach, such switching may be performed steadily which may be realised on the one hand by lowering the adaptation rate of B_{AFB} steadily and/or by reducing beamforming amplification of B_{AFB} steadily.

[0050] Due to the inventively improved suppression of acoustical feedback from the output of the output converter to the input of the input converter, there is reached additional stability of the device. The inter dependencies of vent tailoring at in-the-ear hearing devices and acoustical feedback problems is resolved to a significantly higher degree than was possible up to now when the device had the ability of adaptive beamforming.

Claims

1. A method for suppressing acoustical feedback between an acoustical output of an electrical/acoustical output converter arrangement and an acoustical input of an acoustical/electrical input converter arrangement of a hearing device, by

   • converting acoustical signals impinging on the acoustical/electrical input converter arrangement into a first electric signal by a controllably variable transfer characteristic which is depend-

ent on the angle at which said acoustical signals impinge on said acoustical/electrical input converter arrangement; wherein
• said first electric signal is processed and a resulting signal is applied to the electrical/acoustical output converter arrangement;
• said acoustical feedback to be suppressed is compensated by an electrical feedback-compensating signal which is generated in dependency of the resulting signal and is fed back by a feedback signal path upstream said processing;
• said electrical feedback-compensating signal is fed back to and superimposed upon the first electric signal and wherein further
• the adaptation rate of said converting to variations of said transfer characteristic is controlled in dependency of the loop gain along said feedback signal path.

2. The method of claim 1, further comprising slowing down the adaptation rate of said converting with increasing loop gain along said feedback signal path.

3. The method of claims 1 or 2, further comprising minimising amplification of said transfer characteristic at one or more specific angles which accord to angles at which said acoustical feedback to be suppressed predominantly impinges on said input converter arrangement.

4. The method of one of claims 1 to 3, further comprising frequency selectively controlling said adaptation rate.

5. The method of one of claims 1 to 4, further comprising performing said converting in said first electric signal, and said processing along said feedback signal path in frequency domain and controlling said adaptation rate at selected frequencies in dependency of said loop gain at said selected frequencies.

6. The method of one of claims 1 to 5, further comprising minimizing amplification of said transfer characteristic at specific angles frequency selectively.

7. The method of one of claims 1 to 6, further comprising performing said converting into said first electric signal independently for frequencies present in said acoustical feedback to be suppressed and for frequencies substantially not present in said acoustical feedback to be suppressed.

8. The method of one of claims 1 to 7, further comprising performing said control of said adaptation rate selectively for frequencies present in said acoustical feedback to be suppressed, said control comprising switching said converting on and off.

9. The method of claim 8, further comprising performing switching from on to off and/or vice versa steadily during a predetermined timespan.

10. The method of one of claims 1 to 9, said hearing device being a behind-the-ear or a in-the-ear hearing device.

11. The method of one of claims 1 to 10, said hearing device being a ear protection or a hearing improvement device.

12. A hearing device, comprising:

• an acoustical/electrical input converter arrangement and an adaptive beamformer unit, generating at an output an electric output signal dependent on acoustical signals impinging on said acoustical/electrical input converter arrangement and in dependency of an angle at which said acoustical signals impinge, said beamformer unit having a first control input for varying beamforming characteristics
• a processing unit with an input operationally connected to the output of said beamformer unit and with an output operationally connected to an input of an electrical/acoustical output converter arrangement
• a feedback-compensator unit, the input thereof being operationally connected to said input of said electrical/acoustical output converter arrangement, an output thereof being operationally connected to the input of said processing unit, wherein
• said output of said feedback-compensator unit is operationally superimposed with the output of said beamformer unit,

and Wherein further

• said beamformer unit has a second control input for adjusting its adaptation rate, and
• said feedback-compensator unit has an output for a loop gain indicative signal, being operationally connected to said second control input of said beamformer unit.

13. The device of claim 12 being a behind-the-ear hearing device or an in-the-ear hearing device.

14. The device of one of claims 12 or 13, being a hearing protection device or a hearing improvement device.

Patentansprüche

1. Verfahren zur Unterdrückung von akustischer Rückkopplung zwischen einem akustischen Ausgang ei-

ner elektrisch/akustischen Ausgangswandleranordnung und einem akustischen Eingang einer akustisch/elektrischen Eingangswandleranordnung einer Hörvorrichtung, durch

• Umwandeln akustischer Signale, die auf die akustisch/elektrische Eingangswandleranordnung auftreffen in ein erstes elektrisches Signal, durch eine auf steuerbare Weise variable Übertragungskennlinie, die von dem Winkel abhängt, mit dem die akustischen Signale auf die akustisch/elektrische Eingangswandleranordnung auftreffen; wobei
• das erste elektrische Signal verarbeitet wird und ein resultierendes Signal auf die elektrisch/akustische Ausgangswandleranordnung angewendet wird;
• Kompensieren der zu unterdrückenden akustischen Rückkopplung durch ein elektrisches Rückkopplungskompensationssignal, das in Abhängigkeit von dem resultierenden Signal erzeugt wird und das durch einen Rückkopplungssignalpfad stromaufwärts von der Verarbeitung zurückgeführt wird;
• Zurückführen des elektrischen Rückkopplungskompensationssignals zum ersten elektrischen Signal und Überlagern mit dem ersten elektronischen Signal und wobei ferner
• die Adaptionsrate der Umwandlung an Veränderungen der Übertragungskennlinie in Abhängigkeit von der Kreisverstärkung entlang des Rückkopplungssignalpfads gesteuert wird.

2. Verfahren nach Anspruch 1, ferner aufweisend das Verlangsamen der Adaptionsrate der Umwandlung mit zunehmender Kreisverstärkung entlang des Rückkopplungssignalpfads.

3. Verfahren nach Anspruch 1 oder 2, ferner aufweisend das Minimieren der Verstärkung der Übertragungskennlinie bei einem oder mehreren spezifischen Winkeln, die Winkeln entsprechen, mit denen die zu unterdrückende akustische Rückkopplung vorwiegend auf die Eingangswandleranordnung auftrifft.

4. Verfahren nach einem der Ansprüche 1 bis 3, ferner aufweisend das frequenzselektive Steuern der Adaptionsrate.

5. Verfahren nach einem der Ansprüche 1 bis 4, ferner aufweisend das Durchführen der Umwandlung in das erste elektrische Signal und die Verarbeitung entlang des Rückkopplungssignalpfads im Frequenzbereich und das Steuern der Adaptionsrate bei ausgewählten Frequenzen in Abhängigkeit von der Kreisverstärkung bei den ausgewählten Frequenzen.

6. Verfahren nach einem der Ansprüche 1 bis 5, ferner aufweisend das frequenzselektive Minimieren der Verstärkung der Übertragungskennlinie bei spezifischen Winkeln.

7. Verfahren nach einem der Ansprüche 1 bis 6, ferner aufweisend das unabhängige Durchführen der Umwandlung in das erste elektrische Signal für Frequenzen, die in der zu unterdrückenden akustischen Rückkopplung vorhanden sind, und für Frequenzen, die in der zu unterdrückenden akustischen Rückkopplung weitgehend nicht vorhanden sind.

8. Verfahren nach einem der Ansprüche 1 bis 7, ferner aufweisend das Ausführen der Steuerung der Adaptionsrate selektiv für Frequenzen, die in der zu unterdrückenden akustischen Rückkopplung vorhanden sind, wobei die Steuerung das Ein- und Ausschalten der Umwandlung aufweist.

9. Verfahren nach Anspruch 8, ferner aufweisend das Durchführen einer ständigen Umschaltung von ein zu aus und/oder umgekehrt während einer vorbestimmten Zeitspanne.

10. Verfahren nach einem der Ansprüche 1 bis 9, wobei die Hörvorrichtung eine hinter dem Ohr oder eine im Ohr tragbare Hörvorrichtung ist.

11. Verfahren nach einem der Ansprüche 1 bis 10, wobei die Hörvorrichtung ein Gehörschutz oder eine Hörverbesserungsvorrichtung ist.

12. Hörvorrichtung, aufweisend:

• eine akustisch/elektrische Eingangswandleranordnung und eine adaptive Schallbündlereinheit, die in Abhängigkeit von den akustischen Signalen, die auf die akustisch/elektrische Eingangswandleranordnung auftreffen, und in Abhängigkeit von einem Winkel, mit dem die akustischen Signale auftreffen, an einem Ausgang ein elektrisches Ausgangssignal erzeugt, wobei die Schallbündlereinheit einen ersten Steuerungseingang aufweist, um die schallbündelnden Eigenschaften zu verändern,
• eine Prozessoreinheit mit einem Eingang, der operativ mit dem Ausgang der Schallbündlereinheit verbunden ist, und mit einem Ausgang, der operativ mit einem Eingang einer elektrisch/akustischen Ausgangswandleranordnung verbunden ist,
• eine Rückkopplungs-Kompensationseinheit, deren Eingang operativ mit dem Eingang der elektrisch/akustischen Ausgangswandleranordnung verbunden ist, wobei ein Ausgang von dieser operativ mit dem Eingang der Prozessoreinheit verbunden ist, wobei

• der Ausgang der Rückkopplungs-Kompensationseinheit operativ mit dem Ausgang der Schallbündlereinheit überlagert ist und wobei ferner
• die Schallbündlereinheit einen zweiten Steuerungseingang zur Einstellung ihrer Adaptionsrate aufweist, und
• die Rückkopplungs-Kompensationseinheit einen Ausgang für ein Kreisverstärkungsanzeigesignal aufweist, der operativ mit dem zweiten Steuerungseingang der Schallbündlereinheit verbunden ist.

13. Vorrichtung nach Anspruch 12, wobei es sich um eine hinter dem Ohr oder eine im Ohr tragbare Hörvorrichtung handelt.

14. Vorrichtung nach einem der Ansprüche 12 oder 13, wobei es sich um eine Gehörschutzvorrichtung oder eine Hörverbesserungsvorrichtung handelt.

Revendications

1. Un procédé pour supprimer le retour acoustique entre une sortie acoustique d'un dispositif convertisseur de sortie électrique/acoustique et une entrée acoustique d'un dispositif convertisseur d'entrée acoustique/électrique d'un dispositif auditif, par

• convertir des signaux acoustiques empiétant sur le dispositif convertisseur d'entrée acoustique/électrique en un premier signal électrique par une caractéristique de transfert variable de façon contrôlable qui dépend de l'angle auquel lesdits signaux acoustiques empiètent sur ledit dispositif convertisseur d'entrée acoustique/électrique ; où
• ledit premier signal électrique étant traité et un signal résultant étant appliqué au dispositif convertisseur de sortie électrique/acoustique ;
• compenser ledit retour acoustique à supprimer par un signal de compensation de retour électrique qui est généré en dépendance du signal résultant et qui est restitué par un chemin de signal de retour en amont dudit traitement ;
• restituer ledit signal de compensation de retour électrique au premier signal électrique et superposer au premier signal électrique, et où en autre
• le taux d'adaptation de ladite conversion aux variations de ladite caractéristique de transfert étant contrôlée en fonction du gain de boucle le long dudit chemin de signal de retour.

2. Le procédé selon la revendication 1, comprenant en outre à freiner le taux d'adaptation de ladite conversion en augmentant le gain de boucle le long dudit chemin de signal de retour.

3. Le procédé selon la revendication 1 ou 2, comprenant en outre à réduire au minimum l'amplification de ladite caractéristique de transfert à un ou plusieurs angles spécifiques, essentiellement au niveau des angles auxquels ledit retour acoustique à supprimer affecte principalement ledit dispositif convertisseur d'entrée.

4. Le procédé selon l'une des revendications 1 à 3, comprenant en outre à contrôler de façon sélective ledit taux d'adaptation.

5. Le procédé selon l'une des revendications 1 à 4, comprenant en outre à réaliser ladite conversion dans ledit premier signal électrique, et ledit traitement le long dudit chemin de signal de retour dans le domaine fréquentiel et à contrôler ledit taux d'adaptation aux fréquences sélectionnées en dépendance dudit gain de boucle auxdites fréquences sélectionnées.

6. Le procédé selon l'une des revendications 1 à 5, comprenant en outre à réduire au minimum l'amplification de ladite caractéristique de transfert à des angles spécifiques, sélectifs en fréquence.

7. Le procédé selon l'une des revendications 1 à 6, comprenant en outre à réaliser ladite conversion dans ledit premier signal électrique indépendamment pour les fréquences présentes dans ledit retour acoustique à supprimer ainsi que pour les fréquences essentiellement non présentes dans ledit retour acoustique à supprimer.

8. Le procédé selon l'une des revendications 1 à 7, comprenant en outre à effectuer ledit contrôle dudit taux d'adaptation sélectivement pour les fréquences présentes dans ledit retour acoustique à supprimer, ledit contrôle comprenant à lancer et arrêter ladite conversion.

9. Le procédé selon la revendication 8, comprenant en outre à lancer et arrêter et vice-versa en continu pendant un laps de temps prédéterminé.

10. Le procédé selon l'une des revendications 1 à 9, ledit dispositif auditif étant un dispositif à porter derrière l'oreille ou dans l'oreille.

11. Le procédé selon l'une des revendications 1 à 10, ledit dispositif auditif étant un dispositif de protection d'oreille ou un dispositif d'amélioration de l'audition.

12. Un dispositif auditif, comprenant :

• un dispositif convertisseur d'entrée acousti-

que/électrique et une unité génératrice de faisceau adaptable générant au niveau d'une sortie un signal de sortie électrique dépendant de signaux acoustiques empiétant sur ledit dispositif convertisseur d'entrée acoustique/électrique et en fonction d'un angle au niveau duquel lesdits signaux acoustiques empiètent, ladite unité génératrice de faisceau ayant une première entrée de contrôle pour faire varier les caractéristiques de formation du faisceau

• une unité de traitement avec une entrée raccordée de façon opérationnelle à la sortie de ladite unité génératrice de faisceau et avec une sortie raccordée de façon opérationnelle à une entrée d'un dispositif convertisseur de sortie électrique/acoustique

• une unité de compensation de retour, l'entrée de cette dernière étant raccordée de façon opérationnelle à ladite entrée dudit dispositif convertisseur de sortie électrique/acoustique, et une sortie de cette dernière étant raccordée de façon opérationnelle à l'entrée de ladite unité de traitement, où

• ladite sortie de ladite unité de compensation de retour est superposée de façon opérationnelle à la sortie de ladite unité génératrice de faisceau, et où en autre

• ladite unité génératrice de faisceau a une deuxième entrée de contrôle pour ajuster son taux d'adaptation, et

• ladite unité de compensation de retour a une sortie pour un signal indicatif du gain de boucle, cette dernière étant raccordée de façon opérationnelle à ladite deuxième entrée de contrôle de ladite unité génératrice de faisceau.

13. Le dispositif selon la revendication 12, ce dispositif étant un dispositif auditif à porter derrière l'oreille ou dans l'oreille.

14. Le dispositif selon l'une des revendications 12 ou 13, ce dispositif étant un dispositif de protection d'oreille ou un dispositif d'amélioration de l'audition.

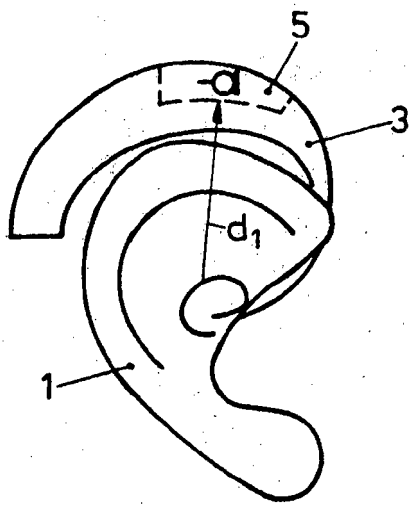

FIG.1

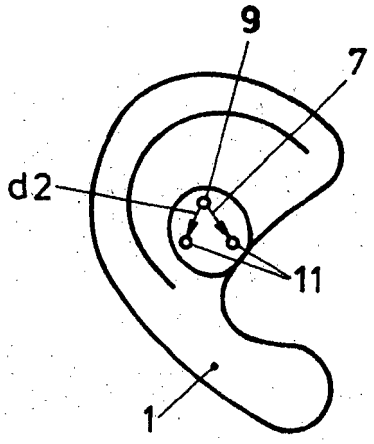

FIG.2

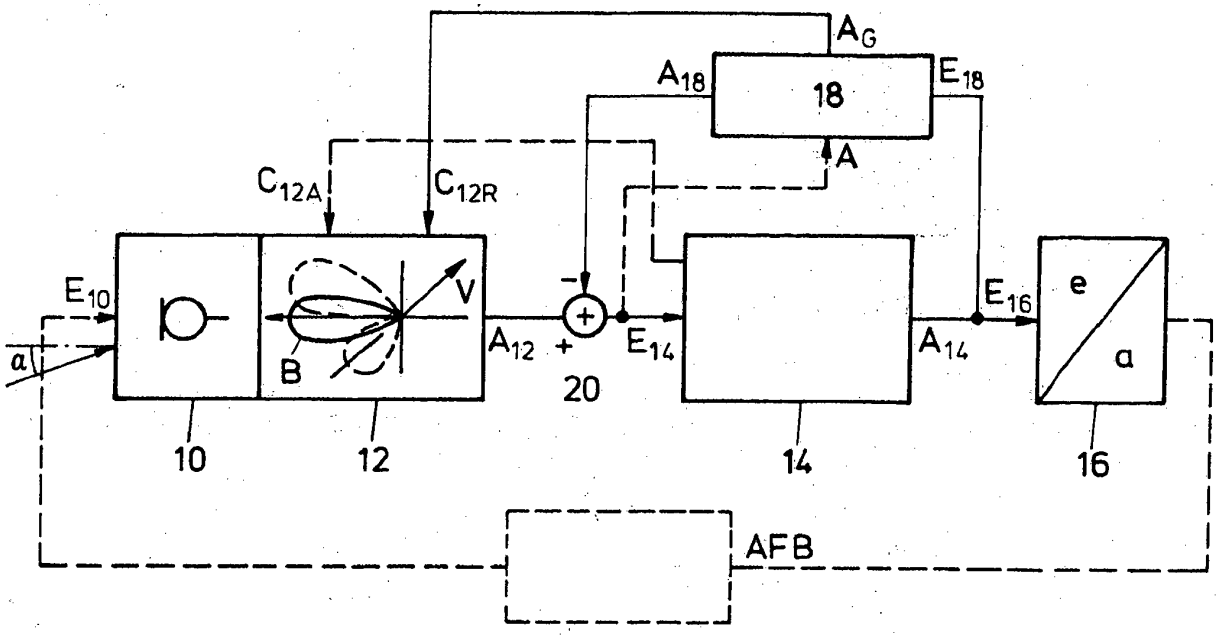

FIG. 3

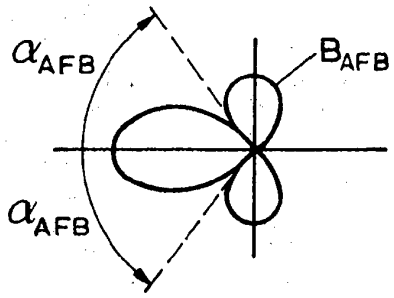

FIG. 4

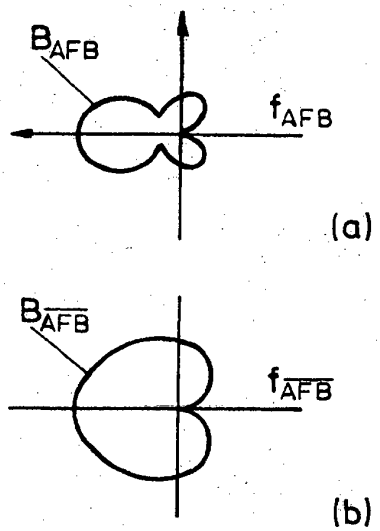

FIG. 5

REFERENCES CITED IN THE DESCRIPTION

This list of references cited by the applicant is for the reader's convenience only. It does not form part of the European patent document. Even though great care has been taken in compiling the references, errors or omissions cannot be excluded and the EPO disclaims all liability in this regard.

Patent documents cited in the description

- EP 0656737 A **[0004] [0008] [0020] [0037]**
- WO 0019605 A **[0004] [0008]**
- WO 0033634 A **[0008] [0033]**

Non-patent literature cited in the description

- **M. BRANDENSTEIN et al.** Microphone arrays. Springer Verlag, 2001 **[0013]**
- **M. BRANDENSTEIN et al.** *Microphone arrays* **[0014]**
- **W. HERBOLDT et al.** *Computationally efficient frequency domain combination of acoustic echo cancellation and robust adaptive beamforming* **[0015]**