(19) Europäisches Patentamt
European Patent Office
Office européen des brevets

(11) EP 1 772 273 B1

(12) **EUROPEAN PATENT SPECIFICATION**

(45) Date of publication and mention of the grant of the patent:
13.08.2008 Bulletin 2008/33

(51) Int Cl.:
B41J 2/175 *(2006.01)*

(21) Application number: **06012995.4**

(22) Date of filing: **23.06.2006**

(54) **Ink cartridge**

Tintenpatrone

Cartouche d'encre

(84) Designated Contracting States:
AT BE BG CH CY CZ DE DK EE ES FI FR GB GR HU IE IS IT LI LT LU LV MC NL PL PT RO SE SI SK TR

(30) Priority: **08.03.2006 JP 2006063251**
28.11.2005 JP 2005342697
28.12.2005 JP 2005377987
29.09.2005 JP 2005284646
23.03.2006 JP 2006081806

(43) Date of publication of application:
11.04.2007 Bulletin 2007/15

(73) Proprietor: **Brother Kogyo Kabushiki Kaisha**
Nagoya-shi, Aichi-ken 467-8561 (JP)

(72) Inventors:
- **Hattori, Shingo**
Mizuho-ku
Nagoya-shi
Aichi 467-8562 (JP)
- **Kanbe, Tomohiro**
Mizuho-ku
Nagoya-shi
Aichi 467-8562 (JP)
- **Sasaki, Toyonori**
Mizuho-ku
Nagoya-shi
Aichi 467-8562 (JP)

(74) Representative: **Hofer, Dorothea et al**
Prüfer & Partner GbR
Patentanwälte
Sohnckestrasse 12
81479 München (DE)

(56) References cited:
EP-A- 1 258 362
EP-A1- 1 164 025
US-A- 6 074 042

Note: Within nine months of the publication of the mention of the grant of the European patent in the European Patent Bulletin, any person may give notice to the European Patent Office of opposition to that patent, in accordance with the Implementing Regulations. Notice of opposition shall not be deemed to have been filed until the opposition fee has been paid. (Art. 99(1) European Patent Convention).

EP 1 772 273 B1

Printed by Jouve, 75001 PARIS (FR)

Description

Technical Field

[0001] The invention relates to ink cartridges and ink jet recording apparatuses, especially to an ink cartridge configured to prevent ink from dripping inside an ink jet recording apparatus when the ink cartridge is attached to and removed from the ink jet recording apparatus.

Background

[0002] EP 0 478 244 A2 discloses an ink cartridge which has a projection to prevent an erroneous loading.

[0003] As disclosed in Japanese Laid-Open Patent Publication No. 2005-238815, known is an ink jet recording apparatus in which a plurality of ink cartridges are placed side by side with their wider surfaces lying down. A container body of the ink cartridge includes a first surface formed with an ink supply port. An ink supply needle provided in the ink jet recording apparatus is inserted into the ink supply port so that ink in the cartridge is supplied to the inkjet recording apparatus. The container body of the ink cartridge contains an ink bag inside, communication between an inside and an outside of the ink bag is interrupted by a seal supply lid. The seal supply lid includes a spring seat inside. The spring seat is urged toward the seal supply lid by a spring, and the seal supply lid and the spring seat make contact with each other, thereby interrupting the communication. Thus, when the ink supply needle is inserted into the ink supply port, the spring seat is pressed in a direction opposite to the urging direction, and an ink passage is provided.

Problems to be solved by the invention

[0004] However, in the above described inkjet recording apparatus, the ink passage is formed so as to project horizontally. If ink adheres to the tip of the ink supply needle during installation and removal of the ink cartridge, the adhered ink may drip in an installation portion for the ink cartridge. If ink drips in the installation portion for the ink cartridge, the ink jet recording apparatus may get soiled inside. In addition, during ink cartridge replacement, the dripping ink may adhere to a replaced ink cartridge or different ink cartridge.

[0005] Especially when the ink supply port is blocked by a valve mechanism using an urging force of a spring, it is difficult to completely prevent ink from flowing out from the ink supply port during installation and removal of the ink cartridge. As a result, ink flowing out during installation and removal of the ink cartridge may drip from the ink supply port to the outside. In this case, the inside of the ink jet recording apparatus is liable to get soiled due to both the ink adhering to the tip of the ink supply needle and ink dripping from the ink supply port.

[0006] In the above ink cartridge, the ink supply port is formed in the first surface of the ink cartridge. Another-type of ink cartridge is provided with an ink supply portion projecting outward from the first surface, and an ink supply port formed at an end of the ink supply portion. Even if the ink cartridge is provided with the ink supply port, which is formed at the end of the ink supply portion, ink running may occur on condition that the ink cartridge has a valve mechanism using an urging force and is placed with its wider surface lying down. In other words, in the ink jet recording apparatus in which the ink cartridge having the valve mechanism using the urging fore is placed with its wider surface lying down, ink running is liable to occur and the installation portion is liable to get soiled regardless of a shape of the ink cartridge.

[0007] The invention is made to solve the above drawbacks, and has an object to provide an ink cartridge and an ink jet recording apparatus that can reduce ink running inside the ink jet recording apparatus during installation and removal of the ink cartridge.

[0008] Another solution is found in US 6,074,042.

Means to solve the problem

[0009] The object is solved by an ink cartridge according to claim 1 and an ink jet recording apparatus according to claims 19 or 20. Further developments are given in the dependent claims.

[0010] In claim 1, the "case" of the invention is a thing designed to shape a contour of the ink cartridge, and the ink chamber disposed inside the case may be defined by inner walls of the case. The "end surface" of the invention is not limited to just a thing clearly regarded as a surface. The end surface may include an area defined as an end of the case.

[0011] In claim 9, the position adjacent to the lower end of the case is below at least a center of the case with respect to the vertical direction. With a simple structure where the ink supply part is disposed at a lower end of the case, so that ink can be consumed well, the ink cartridge may have the first projection disposed at the lowest end of the case.

Advantageous effect of the invention

[0012] According to an aspect of the invention, the first projection is disposed vertically below the ink supply part when the ink cartridge is in the installation posture. Thus, ink flowing from the ink supply part during installation and removal of the ink cartridge runs onto the first projection. As a result, the ink jet recording apparatus can be prevented from getting soiled inside with the ink. Even if the ink supply part has a valve mechanism using an urging force, the inkjet recording apparatus can be prevented from getting soiled inside with ink because the ink runs onto the first projection. In addition, even if the ink supply part projects outward from the end surface of the case, the first projection projects further outward than the ink supply part, and dirt due to ink can be reduced, irrespective of the ink cartridge shape.

[0013] According to another aspect of the invention, the first projection projects horizontally when the ink cartridge is in the installation posture. Comparing a case where the first projection is inclined downward, ink running onto the first projection can be prevented from running further down.

[0014] According to another aspect of the invention, the first projection is provided so that, when the ink cartridge is in the installation posture, at least a part of the first projection is disposed on a line vertically passing through a center of the opening of the ink supply part. Thus, ink running from the opening of the ink supply part can be reliably received onto the first projection.

[0015] According to another aspect of the invention, the opening of the ink supply part completely falls within an area occupied by the first projection when the ink cartridge in the installation posture is viewed in a vertical direction. Namely, the first projection is formed wider than the opening of the ink supply part with respect to the horizontal direction. Thus, ink running from the opening of the ink supply portion can be reliably received onto the first projection.

[0016] According to the ink cartridge of the invention, the surface of the first projection which faces the ink supply part is formed flat or recessed and can prevent ink running onto the first projection from running further downward.

[0017] According to the ink cartridge of the invention, the first projection is disposed at a lower end of the case, and the ink supply part is disposed in a position closer to the lower end of the case than to an upper end thereof. Thus, a distance from the ink supply part to the first projection is short. If the distance is long, ink running from the ink supply part may run down away from the vertical direction, so that the first projection may not be able to receive the ink running down. However, as the ink supply part is disposed at the position adjacent to the lower end of the case, ink runs vertically from the ink supply part, and thus it can be reliably received by the first projection. With a simple structure where the ink supply part is disposed at a lower end of the case, so that ink can be consumed well It is preferable that the ink cartridge has the first projection disposed at the lower end of the case.

[0018] According to another aspect of the invention, the first projection, which is disposed at a lower portion when the ink cartridge is installed in the ink jet recording apparatus, includes an inclined surface extending upward continuously from a bottom surface of the case. Thus, the ink cartridge can be installed smoothly. Unless the first projection includes an inclined surface, when the ink cartridge is installed in the ink jet recording apparatus, a corner portion of the first projection may collide with the insertion opening of the ink jet recording apparatus, and the ink cartridge may not be installed smoothly.

[0019] According to another aspect of the invention, the first projection is configured to operate an installation detection switch disposed in the ink jet recording apparatus when the ink cartridge is installed in the ink jet recording apparatus. Thus, the first projection can not only reduce ink running but also detect whether the ink cartridge is installed. In addition, as the first projection projects further than the ink supply part projects, the installation detection switch can be disposed inward, with respect to a direction where the ink cartridge is installed, deeper than at least a place where ink is supplied. If the installation detection switch is disposed toward the front, it may contact other elements of the ink cartridge, so that it may get damaged and detection errors may occur. As the installation switch can be disposed inward, occurrence of damage and detection errors can be reduced.

[0020] According to another aspect of the invention, the ink cartridge includes a light radiated part configured to be radiated with light emitted from an optical sensor provided in the ink jet recording apparatus. When the ink cartridge is installed in the ink jet recording apparatus, the light is applied to the light radiated part. Thus, it is possible to accurately detect whether the ink cartridge is installed based on a detection result of the optical sensor. In addition, by use in conjunction with a detection result of the installation detection switch, the reliability to detect the installation of the ink cartridge can be improved. Further, it is possible to detect abnormality of either of the sensor and the switch based on the change in the output state of the sensor and the switch. This is because the first projection and the light radiated part project in the same direction and their output state changes at substantially the same timing. Thus, when there is a change in the output state of one of the first projection and the light radiated part and there is no change in the output state of the other one of the first projection and the light radiated part abnormality of the other one can be recognized.

[0021] According to another aspect of the invention, the light radiated part is provided with an inner space communicating with the ink chamber, and the movable member, which is configured to move in response to a change of an ink level in the ink chamber, is disposed in the inner space. Thus, the amount of light received by the optical sensor can be changed. As a result, with the ink cartridge installed, the remaining amount of ink can be detected by the optical sensor.

[0022] According to another aspect of the invention, the first projection projects in the same direction as the extracting member extends. Thus, if ink adhering to the end of the extracting member runs down, the ink running down can be received onto the first projection, and thus the ink jet recording apparatus can be prevented from getting soiled inside. In addition, as the ink jet recording apparatus includes an accommodating portion defining a space corresponding to a contour of the ink cartridge and configured to receive the ink cartridge installed in a horizontal direction. Thus, this can prevent the projecting directions of the extracting member and the first projection from deviating from each other during installation and removal of the ink cartridge. As a result, ink running from the end of the extracting member can be accurately

received onto the first projection.

[0023] According to another aspect of the invention, the installation detection device detects that the ink cartridge is installed when the installation detection device recognizes that the installation detection switch has been operated and an amount of light that the optical sensor received has been changed, and the controlling device allows the recording device to perform recording when the installation detection device detects that the ink cartridge is installed. Thus, installation detection is performed using a detection result of the installation detection switch and a detection result of the optical sensor, the reliability to detect the installation of the ink cartridge can be improved. Thus, as the recording device does not perform recording when the ink cartridge is not installed, the occurrence of recording errors can be prevented. In addition, it is possible to detect abnormality of one of the optical sensor or the installation detection switch based on output change of the sensor and the switch. This is because the first projection and the light radiated part project in the same direction and their output state changes at substantially the same timing. Thus, when there is a change in the output state of one of the first projection and the light radiated part and there is no change in the output state of the other one of the first projection and the light radiated part, abnormality of the other one can be recognized.

[0024] Further features and advantages will arise from the following description of embodiments when taken in conjunction with the enclosed drawings, of which:

FIG. 1 is an angled diagram showing the external appearance of the multifunction device of the present invention.

FIG. 2 is an angled diagram of the refill unit.

FIG 3 is a side view showing the state in which the door of the refill unit has been opened.

FIG. 4 is a cross-sectional diagram showing the refill unit in Figure 2 along the IV-IV line.

FIG. 5 is a cross-sectional diagram showing the refill unit in Figure 2 along the V-V line.

FIG. 6 is an exploded perspective view showing the door of the refill unit.

FIG. 7 is an angled diagram showing the external appearance of the color ink cartridge.

FIG. 8 is an angled diagram showing the details of the color ink cartridge.

FIG. 9 is a diagram showing the protector, where (a) is a top-surface diagram of the protector in Figure 8 as seen from the IXa perspective, and (b) is a cross-sectional diagram of the protector in Figure 9(a) along the IXb-IXb line.

FIG. 10 is an angled diagram showing the external appearance of the black ink cartridge.

FIG. 11 is an angled diagram showing the details of the black ink cartridge.

FIG. 12 is an angled diagram showing the external appearance of the large capacity black ink cartridge.

FIG. 13 is an angled diagram showing the details of the large capacity black ink cartridge.

FIG. 14 is a diagram showing the ink reservoir element, where (a) is a front view of the ink reservoir element and (b) is a side view of the ink reservoir element.

FIG. 15 is a diagram showing the supply path formation part, where (a) is a diagram showing a summary of the supply path formation part (a side view of the frame part), (b) is a cross-sectional diagram showing the supply path formation part in Figure 15(a) along the XVb-XVb line, (c) is a diagram showing the state in which the amount of ink has been reduced, and (d) is a diagram showing the completion of the ink supply.

FIG. 16 is a diagram showing the ambient air path formation part, where (a) is an angled diagram showing a summary of the ambient air path formation part, (b) is a diagram showing the ambient air path formation part in Figure 16 (a) along the arrow XVIb perspective, and (c) is a diagram showing the ambient air path formation part in Figure 16(a) along the arrow XVIc perspective.

FIG. 17 is a diagram showing the injection path formation part, where (a) is a diagram showing a summary of the injection path formation part, and (b) is a cross-sectional diagram of the injection path formation part in Figure 17 (a) along the XVIIb-XVIIb line.

FIG. 18 is a diagram showing the detection part vicinity, where (a) is a diagram showing a summary of the detection part vicinity, (b) is a cross-sectional diagram of the detection part in Figure 18(a) along the XVIIIb-XVIIIb line, and (c) is a cross-sectional diagram of the detection part in Figure 18(a) along the XVIIIc-XVIIIc line.

FIG. 19 is a diagram showing the sensor arm, where (a) is a front view of the sensor arm and (b) is a diagram showing the sensor arm in Figure 19(a) along the arrow XIXb perspective.

FIG. 20 is a diagram showing one part of the ink reservoir element, where (a) is a diagram showing the side of the ink reservoir element, (b) is a diagram showing one side of the front of the ink reservoir element, and (c) is a cross-sectional diagram of Figure 20(a) along the XXc-XXc line.

FIG. 21 is a diagram showing the details of the ink reservoir element.

FIG. 22 is an exploded diagram of the ink supply mechanism and the ambient air intake mechanism, where (a) is an exploded diagram of the ink supply mechanism and (b) is an exploded diagram of the ambient air intake

mechanism.

FIG. 23 is a diagram showing the supply cap, where (a) is a diagram showing the side of the supply cap, (b) is a diagram showing the side surface of the supply cap in Figure 23(a) along the arrow XXIIIb perspective, (c) is a diagram showing the planar surface of the supply cap, (d) is a diagram showing the bottom surface of the supply cap, and (e) is a cross-sectional diagram of the supply cap in Figure 23(c) along the XXIIIe-XXIIIe line.

FIG. 24 is a diagram showing the supply joint, where (a) is a diagram showing the side of the supply joint, (b) is a diagram showing the planar surface of the supply joint, (c) is a diagram showing the bottom surface of the supply joint, and (d) is a cross-sectional diagram of the supply joint in Figure 24(b) along the XXIVd-XXIVd line.

FIG. 25 is a diagram showing the supply valve, where (a) is a diagram showing the side of the supply valve, (b) is a diagram showing the side of the supply valve in Figure 25(a) along the arrow XXVb perspective, (c) is a diagram showing the planar surface of the supply valve, (d) is a diagram showing the bottom surface of the supply valve, and (e) is a cross-sectional diagram of the supply valve in Figure 25(c) along the XXVe-XXVe line.

FIG. 26 is a diagram showing the first supply spring, where (a) is a diagram showing the side of the first supply spring, (b) is a diagram showing the planar surface of the first supply spring, (c) is a diagram showing the bottom surface of the first supply spring, and (d) is a cross-sectional diagram of the first supply spring in Figure 26(b) along the XXVId-XXVId line.

FIG. 27 is a diagram showing the supply slider, where (a) is a diagram showing the side of the supply slider, (b) is a diagram showing the side of the supply slider in Figure 27(a) along the arrow XXVIIb perspective, (c) is a diagram showing the planar surface of the supply slider, (d) is a diagram showing the bottom surface of the supply slider, and (e) is a cross-sectional diagram of the supply slider in Figure 27(c) along the XXVIIe-XXVIIe line.

FIG. 28 is a diagram showing the valve seat, where (a) is a diagram showing the side of the valve seat, (b) is a diagram showing the planar surface of the valve seat, (c) is a diagram showing the bottom surface of the valve seat, and (d) is a cross-sectional diagram of the valve seat in Figure 28(b) along the XXVIIId-XXVIIId line.

FIG. 29 is a diagram showing the check valve, where (a) is a diagram showing the side of the check valve, (b) is a diagram showing the planar surface of the check valve, (c) is a diagram showing the bottom surface of the check valve, and (c) is a cross-sectional diagram of the check valve in Figure 29(a) along the XXIXd-XXIXd line.

FIG. 30 is a diagram showing the cover, where (a) is a diagram showing the side of the cover, (b) is a diagram showing the planar surface of the cover, (c) is a diagram showing the bottom surface of the cover, and (d) is a cross-sectional diagram of the cover in Figure 30(b) along the XXXd-XXXd line.

FIG. 31 is a diagram showing the ambient air cap, where (a) is a diagram showing the side of the ambient air cap, (b) is a diagram showing the side of the ambient air cap in Figure 31 (a) along the arrow XXXIb perspective, (c) is a diagram showing the planar surface of the ambient air cap, (d) is a diagram showing the bottom surface of the ambient air cap, and (e) is a cross-sectional diagram of the ambient air cap in Figure 31(c) along the XXXIe-XXXIe line.

FIG. 32 is a diagram showing the ambient air joint, where (a) is a diagram showing the side of the ambient air joint, (b) is a diagram showing the planar surface of the ambient air joint, (c) is a diagram showing the bottom surface of the ambient air joint, and (d) is a cross-sectional diagram of the ambient air joint in Figure 32(b) along the XXXIId-XXXIId line.

FIG. 33 is a diagram showing the ambient air valve, where (a) is a diagram showing the side of the ambient air valve, and (b) is a diagram showing the bottom surface of the ambient air valve.

FIG. 34 is a partial cross-sectional diagram showing the state in which the inky supply mechanism and the ambient air intake mechanism have been assembled into the ink supply unit and the ambient air intake unit.

FIG. 35 is a diagram showing the manufacturing processes prior to welding the film.

FIG. 36 is a diagram showing the welding processes for the film, where (a) is a diagram showing the welding surface of the film onto the frame part, and (b) is a diagram showing the welding process to weld the film onto the frame part.

FIG. 37 is a diagram showing the manufacturing processes that are performed after the film welding, where (a) is a diagram showing the attachment process to attach the ink supply mechanism and the ambient air intake mechanism onto the frame part, (b) is a diagram showing the pressure reducing process, and (c) is a diagram showing the ink injection process.

FIG. 38 is a diagram showing the attachment process for the case, where (a) is a diagram showing the process to sandwich the frame part by the case, and (b) is a diagram showing the welding process to weld the case.

FIG. 39 is a diagram showing the manufacturing processes that are performed prior to shipment of the ink cartridge, where (a) is a diagram showing the process to attach the protective cap, and (b) is a diagram showing the process to package the ink cartridge using the packaging unit.

FIG. 40 is a diagram showing the method of attaching the ink cartridge to the multifunction device.

FIG. 41 is a diagram showing the state in which the ink cartridge has been attached to the multifunction device.

FIG. 42 is a diagram showing the operation of the sensor arm corresponding to the amount of ink remaining within the ink reservoir chamber, where (a) shows the state in which there is ink remaining, and (b) shows the state in which there is no ink remaining.

FIG. 43 is a diagram showing the operation theory of the sensor arm diagrammatically.

FIG. 44 is a cross-sectional diagram showing the state in which the ink cartridge has been attached to the multifunction device 1 in the wrong orientation.

FIG.45 is a diagram showing the method of removing the ink cartridge from the inkjet recording device.

FIG. 46 is a diagram showing the front perspective of the ink cartridge and the state in which it is removed from the multifunction device.

FIG. 47 is a diagram showing the structure to reduce adherence of the ink onto the detection surface of the detection part of the ink cartridge, where (a) shows the state in which the ink cartridge has been removed from the refill unit, (b) is a diagram showing the surface on which the detection part is formed on the ink cartridge, and (c) is an angled view of the ink cartridge.

FIG. 48 is a diagram showing the front of the case, where (a) is a front view of the case that can store either the large capacity blank ink cartridge or the black ink cartridge and the color ink cartridge, and (b) is a front view of the case that can store the black ink cartridge and the color ink cartridge.

FIG. 49 is a cross-sectional diagram showing a summary of the cross section of the case, where (a) is a cross-sectional diagram showing a summary of the case in Figure 48(a) along the XXXXIXa-XXXXIXa line, and (b) is a cross-sectional diagram showing a summary of the case in Figure 48(b) along the XXXXIXb-XXXXIXb line.

FIG. 50 is a cross-sectional diagram showing the state in which each ink cartridge has been attached within the case.

FIG. 51 is a diagram showing the combination of the case members diagrammatically.

FIG. 52 is a diagram showing the ink cartridge and refill unit according to the second example of embodiment, where (a) is a diagram showing the side of the ink cartridge according to the second example of embodiment, and (b) is a diagram showing the cross-section of the state in which the ink cartridge has been attached within the refill unit.

FIG. 53 is an angled diagram showing the external appearance of the ink cartridge according to the third and fourth examples of embodiment, where (a) is an angled diagram showing the external appearance of the ink cartridge according to the third example of embodiment, and (b) is an angled diagram showing the external appearance of the ink cartridge according to the fourth example of embodiment.

FIG. 54 is an angled diagram showing the ink cartridge according to the fifth example of embodiment.

FIG. 55 is a cross-sectional diagram showing the state in which the ink cartridge according to the fifth example of embodiment has been attached within the refill unit.

FIG. 56 is a cross-sectional diagram showing the state in which the ink cartridge according to the sixth example of embodiment has been attached within the refill unit.

FIG. 57 is a block diagram showing a summary of the electrical structure of the multifunction device according to the sixth example of embodiment.

FIG. 58 is a flowchart showing the ink cartridge attachment detection process that is executed by the CPU.

FIG. 59 is an angled diagram showing the external appearance of the ink cartridge according to the seventh and eighth examples of embodiment, where (a) is an angled diagram showing the external appearance of the ink cartridge according to the seventh example of embodiment, and (b) is an angled diagram showing the external appearance of the ink cartridge according to the eighth example of embodiment.

FIG. 60 is a diagram showing the ink cartridge and refill unit according to the ninth example of embodiment.

FIG. 61 is an angled diagram showing the external appearance of the ink cartridge according to the tenth example of embodiment.

FIG. 62 is an exploded perspective diagram showing

the ink cartridge according to the tenth example of embodiment.

FIG. 63 is a diagram showing the interchange procedure for the ink reservoir unit.

FIG. 64 is a diagram showing the ink reservoir unit according to the eleventh example of embodiment.

FIG. 65 is a diagram showing a modified example of the combination of the case members.

FIG. 66 is a diagram showing a modified example of the combination of the case members.

FIG. 67 is a diagram showing a modified example of the combination of the case members.

(Embodiments of the Invention)

[0025] Preferable embodiments of the present invention will be described hereafter with reference to the attached drawings. Figure 1 is an oblique view showing the appearance of multifunction device 1 in which ink cartridge 14 of the present invention is installed.

[0026] Printer part 11 is provided on the lower part of multifunction device 1, and scanner part 12 is provided on the upper part of this printer part 11. Multifunction device 1 is an MFD (Multi Function Device) in which printer part 11 and scanner part 12 are provided as a unit, and it has various functions such as a printer function, scanner function, copy function, and facsimile function.

[0027] Multifunction device 1 is primarily connected to a computer (external PC; not illustrated in the figure), and it records images or documents to recording paper used as a recording medium based on image data or document data sent from this computer. Multifunction device 1 can also be connected to an external device such as a digital camera (not illustrated in the figure) such that it records image data outputted from the digital camera to recording paper. Moreover, by using receiver 2, multifunction device 1 can communicate with a device of another party and send image data to the device of the other party. Furthermore, multifunction device 1 is equipped with slot part 23, which is described below, and by loading various types of recording media such as memory cards into this slot part 23, the device can record data such as image data recorded on the recording medium to recording paper.

[0028] In multifunction device 1, printer part 11 is configured as an inkjet recording device, and refill unit 13, which stores ink that is supplied to a recording head (not illustrated in the figure) that discharges ink drops in advance, is equipped at the base of the front surface of multifunction device 1. Refill unit 13 has a compact design and is configured such that ink cartridge 14 can be easily replaced, and this will be described in detail below.

[0029] Scanner part 12 is equipped with document bed 15, which functions as an FBS (Flatbed Scanner), and document cover 16, which is provided on the upper part of this document bed 15 (top of figure 1). Document cover 16 is equipped with automatic document feeder (ADF: Auto Document Feeder; called "ADF" hereafter) 17, and it is attached to the back side of document bed 15 (back side of Figure 1) using a hinge such that it can be freely opened and closed. Therefore, document cover 16 is opened and closed by rotating in the direction of arrow A with respect to document bed 15. In this embodiment, document bed 15 constitutes a portion of the housing of multifunction device 1, and document cover 16 constitutes a portion of the top surface of multifunction device 1.

[0030] Document bed 15 is equipped with a contact glass sheet (not illustrated in the figure) between the document bed and document cover 16, and it is equipped with an image reading unit (not illustrated in the figure) on the inside. A document is placed between document cover 16 and the contact glass sheet, and the image reading unit reads images from the document by moving along the contact glass sheet from the bottom of the contact glass sheet.

[0031] Document cover 16 is equipped with ADF 17, and this ADF 17 is configured such that it can consecutively feed up to a prescribed number of documents from document tray 18 to paper ejection tray 19. Moreover, ADF 17 has a known structure, so its detailed description will be omitted. In this embodiment, a configuration that is not equipped with ADF 17 may also be used. In this configuration, document cover 16 is opened by the user, and documents are placed on the contact glass sheet.

[0032] Printer part 11 is equipped with an image recording part that has an inkjet recording head (not illustrated in the figure), and this is configured as an inkjet recording device. Printer part 11 is equipped with refill unit 13 on the front side of multifunction device 1 (front side of Figure 1) and on the bottom side of multifunction device 1 (bottom side of Figure 1). In other words, refill unit 13 is built in to the front surface 1a side and the bottom surface 1b side of multifunction device 1. In this embodiment, refill unit 13 is configured such that it can house and hold four ink cartridges 14, and black, yellow, magenta, and cyan colored ink is stored in each of these ink cartridges 14. The ink of each color stored in ink cartridges 14 is supplied to the recording head through ink tube 53 (see Figure 5).

[0033] Moreover, opening/closing cover 20 that opens and closes opening 21 formed at the end of front surface 1a (end of the front right side in Figure 1) is provided on the front surface of refill unit 13 (front of Figure 1). Opening/closing cover 20 is configured such that it can be freely rotated between a position in which it exposes refill unit 13 through opening 21 and a position in which it closes opening 21 and houses refill unit 13 by folding it over to the front (front direction in Figure 1).

[0034] Opening 22 is formed in the center of front surface 1a of multifunction device 1, and a paper feed tray (not illustrated in the figure) is positioned inside this opening 22 (in Figure 1, the state in which the paper feed tray is disengaged is illustrated). After the recording paper that is sent from the paper feed tray is sent to the back side, it is sent to the top and finally fed to the front side,

and images are recorded onto the recording paper while the recording paper is fed. The recording paper is then discharged to a paper ejection tray (not illustrated in the figure) that is provided on the upper part of the paper feed tray inside opening 22.

[0035] Operation panel 30 is attached to the top surface of the front surface side of multifunction device 1 (upper part of the front surface in Figure 1). This operation panel 30 is an operation part for the purpose of performing the operations of printer part 11 and scanner part 12, and it is equipped with various operation keys 31-34 and liquid crystal display part 35. The various operation keys 31-34 arranged on operation panel 30 are connected to a control device (or a control circuit board; not illustrated in the figure) used as a control means for controlling major functions through flat cables not illustrated in the Figure. In addition to processing commands from the various operation keys 31-34, the control device processes commands from receiver 2 described above and controls the operation of multifunction device 1. Further, in cases in which a device such as a personal computer is connected to multifunction device 1, the control device controls the operation of multifunction device 1 based on instructions sent from this personal computer in addition to the instructions from operation panel 30.

[0036] Slot part 23 through which recording media such as various small memory cards can be loaded is equipped on the bottom of operation panel 30 (bottom of Figure 1). Image data is stored on the small memory card, and the image data (or information related to image data) that is read out from the small memory card is displayed on liquid crystal display part 35. The device is configured such that arbitrary images displayed on liquid crystal display 35 can then be recorded to recording paper by the operation of operation panel 30.

[0037] Next, refill unit 13 will be described with reference to Figures 2-6. Figure 2 is an oblique view of refill unit 13. Figure 3 is a side view of the state in which door 41 of refill unit 13 has been opened. Figure 4 is a cross-sectional view of refill unit 13 through line IV-IV of Figure 2, and the state in which ink cartridges 14 are installed is illustrated. Figure 5 is a cross-sectional view of refill unit 13 through line V-V of Figure 2, and the state in which ink cartridges 14 are installed is illustrated. Figure 6 is an exploded perspective view of door 41 of refill unit 13. Figures 3 and 4 illustrate the state in which needle forming member 48 is removed.

[0038] As illustrated in Figure 2, refill unit 13 is primarily equipped with case 40, into which ink cartridges 14 are inserted and removed, and door 41, which is connected to this case 40. Case 40 is formed into a roughly rectangular parallelepiped on the whole, and, as illustrated in Figure 4, accommodating chambers 50 (housing parts) that house and hold ink cartridges 14 are partitioned and formed on the inside. In this embodiment, case 40 has four accommodating chambers 50, and four ink cartridges 14 are inserted into and removed from each accommodating chamber 50. The inner wall surface shape of each accommodating chamber 50 is formed such that it demarcates space corresponding to the outside shape of ink cartridge 14, and when each ink cartridge 14 is installed in case 40, it is held inside case 40 without rattling.

[0039] As illustrated in Figure 2, case 40 is equipped with bottom plate part 42, side plate parts 43 that are provided on the left and right sides of this bottom plate part 42 (side plate part 43 on the back left side is not illustrated in Figure 2), and ceiling plate part 44 that is positioned such that it spans the space between each side plate part 43, and the inside of accommodating chambers 50 is further equipped with partition wall parts 47 (see Figure 4) for partitioning each accommodating chamber 50. The number of these partition wall parts 47 arranged is determined by the number of ink cartridges 14 housed in case 40, and the positions in which they are arranged are determined by the thicknesses of ink cartridges 14 in the width direction. As illustrated in Figure 4, partition walls 47 are formed in a rib shape provided from the top and bottom of bottom plate part 42 and ceiling plate part 44. Further, partition wall parts 47 do not need to completely partition each accommodating chamber 50, so they may be of any shape as long as the shape protrudes to the inside from at least one of bottom plate part 42 or ceiling plate part 44 and divides the space between adjacent accommodating chambers 50.

[0040] Moreover, as illustrated in Figure 2, cutout part 40a (opening part) that is opened is formed on the back side of case 40 (back right side of Figure 2), and needle forming member 48 is fitted into this cutout part 40a. Needle 49 (extraction member) that extracts the ink inside ink cartridges 14 is formed on needle forming member 48 based on the number of ink cartridges 14 housed in accommodating chambers 50 of case 40.

[0041] As illustrated in Figure 5, needle 49 extends along the direction of opening 45 of case 40 and in a roughly horizontal direction (ink cartridge installation direction) in the state in which needle forming member 48 is engaged with cutout part 40a. When an ink cartridge 14 is installed in an accommodating chamber 50, this needle 49 is inserted into ink supply part 120 (see Figure 8) of ink cartridge 14, and an ink supply path is formed as supply valve 620 (see Figure 22) of ink supply mechanism 500 (see Figure 22) is pressed. Needle 49 communicates with ink extraction opening 52 that projects upward on the back side of case 40 (right side of Figure 5), and ink tube 53 is connected to this ink extraction opening 52. Ink tube 53 is connected to an inkjet recording head (not illustrated in the figure), and it is able to supply the ink inside ink cartridges 14 to the inkjet recording head.

[0042] Passage 54, which introduces ambient air into ink cartridges 14, is formed on the side wall of case 40, which forms the top of needle 49 (top of Figure 5). When the ink inside ink cartridges 14 is extracted through needle 49, ambient air corresponding to the extracted ink passes through passage 54 and is supplied into ink car-

tridges 14.

[0043] Further, protrusion 55 that projects to the ink cartridge 14 side (left side of Figure 5) is formed on the top of passage 54. This protrusion 55 is a guide protrusion that is fitted into case fitting grooves 214b2 and 224b2 described below (see Figure 8). Moreover, when an ink cartridge 14 is about to be installed upside-down, the upside-down insertion of ink cartridge 14 is prevented by this protrusion 55. A detailed description of this prevention of the backwards insertion of ink cartridge 14 is given below. A detailed description of the internal structure of ink cartridge 14 is also given below.

[0044] On the back side of case 40, remaining ink detection sensor 57, which detects the height of the ink liquid level (remaining ink) inside ink cartridge 14, is provided between needle 49 and passage 54. This remaining ink detection sensor 57 is a transmissive optical sensor that has light emitting part 57a and light receiving part 57b, and it is provided according to the number of ink cartridges 14 housed in accommodating chambers 50. Remaining ink detection sensor 57 is provided in a position corresponding to detection part 140 (see Figure 8) of ink cartridge 14 in the state in which ink cartridge 14 is housed inside accommodating chamber 50, and it is arranged in a position in which light emitting part 57a and light receiving part 57b can sandwich both sides of detection part 140 of ink cartridge 14 housed inside accommodating chamber 50. (See Figure 18(b)) Remaining ink detection sensor 57 is connected to a control device, and the amount of remaining ink stored in each ink cartridge 14 is constantly monitored by this control device.

[0045] Rib 44a is provided on ceiling plate part 44, and this improves the rigidity of case 40. Further, ceiling plate part 44 is equipped with swing arm mechanism 44b. A tension spring is attached between swing arm mechanism 44b and ceiling plate part 44, and swing arm mechanism 44b is always elastically biased in the direction of door 41 (front left side of Figure 2; left side of Figures 3-5). Swing arm mechanism 44b is configured such that the ends that project into case 41 (accommodating chamber 50) engage with latch parts 217a and 227a (see Figure 8) of ink cartridge 14, for example, in the state in which it is elastically biased. It is therefore possible to reliably hold ink cartridge 14 that is installed in case 40.

[0046] Opening 45 is provided on the front surface of case 40 (insertion hole through which ink cartridge 14 is installed). This opening 45 is provided on each of the accommodating chambers 50. In other words, each accommodating chamber 50 is successively provided inside case 40 on each opening 45, and the four ink cartridges 14 are respectively inserted into and removed from each accommodating chamber 50 through openings 45.

[0047] Door 41 opens and closes opening 45, and is provided on each opening 45. The position of door 41 switches between a position in which it closes opening 45 (blocked position) as with the 1st, 3rd and 4th door 41 from the back in figure 2 and a position in which it opens opening 45 (open position), as with the 2nd door 41 from the back left in Figure 2, and opening 45 can thereby be opened and closed. When door 41 is in the blocked position, ink cartridge 14 is reliably held inside accommodating chamber 50, and when door 41 is in the open position, ink cartridge 14 can be easily inserted into and removed from accommodating chamber 50.

[0048] Here, the structure of door 41 will be described in detail with reference to Figure 6. Door 41 is equipped with door main body 60, pressing retaining member 61 that is provided on this door main body 60, door lock member 62 (lock bar) that fastens (locks) door 41 to case 40, and lock release lever 63 that releases door 41 from the fastened state. Door main body 60, pressing retaining member 61, door lock member 62, and lock release lever 63 are each molded using resins.

[0049] As illustrated in Figure 6, door main body 60 is roughly formed into a sheet in the shape of a long and thin rectangle. The external shape of door main body 60 is formed according to the shape of opening 45 of case 40. Rotating shaft part 64, which is supported on the lower part of the front surface of case 40, is formed on the bottom end of door main body 60 (bottom side end in Figure 6). Specifically, bearing part 42a is formed on the front end of bottom plate part 42 of case 40 (see Figures 2, 3, and 4), and rotating shaft part 64 is fitted into this bearing part 42a such that it can rotate freely. As a result, door main body 60 can close opening 45 by standing up or open opening 45 by folding over.

[0050] Pullout member 65, which is formed as a unit with door main body 60, is provided on the bottom end of door main body 60. This pullout member 65 is roughly formed into an L-shape, and it has extension part 65a and curved part 65b. Extension part 65a is successively provided on the bottom end of door main body 60 (rotating shaft part 64), and curved part 65b is successively provided forming an approximately 90° angle with extension part 65a.

[0051] When door 41 is in the blocked position (state illustrated in Figure 4), the tip of curved part 65b projects even further upwards than installation surface 51 of accommodating chamber 50 (bottom surface inside accommodating chamber 50 that makes contact with the bottom surface of ink cartridge 14; see Figure 4). Door main body 60 rotates around rotating shaft part 64 as a rotational center, and as a result, pullout member 65 that is formed in an L-shape also rotates around rotating shaft part 64 as a rotational center. When door 41 changes to the open position (state illustrated in Figure 3), curved part 65b of pullout member 65 rotates around rotating shaft part 64 as a rotational center. At this time, as a result of the rotation of curved part 65b, outer wall surface 65c changes from a state in which it stands roughly perpendicularly (state illustrated in Figure 4) to a roughly horizontal state (state illustrated in Figure 3). The length of extension part 65a of pullout member 65 is set to a prescribed dimension, so when curved part 65b is rotated, outer wall surface 65c is slightly higher than installation surface 51 of

case 40 and is roughly parallel to installation surface 51.

[0052] Outer wall surface 65c functions as a guide surface that guides ink cartridge 14 onto installation surface 51 inside accommodating chamber 50 in the state in which door 41 is in the open position. As a result, pullout member 65 functions not only as a member for pulling ink cartridge 14 out of accommodating chamber 50, but also as a guiding member when inserting ink cartridge 14 into accommodating chamber 50.

[0053] In this embodiment, two pullout members 65 are provided on each door main body 60. In other words, pullout members 65 are configured such that they are positioned opposite the width direction of door main body 60 and support ink cartridge 14 by sandwiching it in the width direction. Moreover, in this embodiment, the spacing between each of the pullout members 65 is set to be smaller than the width direction of ink cartridge 14.

[0054] Claw 61a is provided on both sides of pressing retaining member 61 such that it protrudes to the outside from the side surface, and claw accommodating part 60a, in which claw 61 a is housed, is provided on door main body 60. Claw accommodating part 60a is configured from a groove that extends in a direction that is roughly perpendicular to the longitudinal direction of door main body 60 (vertical direction in Figure 6). Claw 61 a is fitted into claw accommodating part 60a such that it can slide freely, so pressing retaining member 61 is supported such that it can advance and retreat in a direction that is perpendicular to the longitudinal direction of door main body 60. In other words, pressing retaining member 61 can change positions between a projected position in which it is raised from the inside surface of door main body 60 (state illustrated in Figure 3) and a retreated position in which it has retreated from the projected position to the side of door main body 60 (state illustrated in Figure 4). Moreover, coil spring 66 is placed between pressing retaining member 61 and door main body 60. Therefore, pressing retaining member 61 is elastically biased such that it is always in the projected position.

[0055] When door 41 is in the blocked position, pressing retaining member 61 makes contact with the side surface of ink cartridge 14 and is displaced to the retreated position side as it is relatively pressed by ink cartridge 14 (state illustrated in Figure 4). As a result, ink cartridge 14 receives the elastic force of coil spring 66 through pressing retaining member 61 and is pressed against the back side of case 40 (back side of the direction in which ink cartridge 14 is installed). Therefore, ink cartridge 14 is held in a state in which it is positioned with respect to case 40.

[0056] In this embodiment, pressing retaining member 61 is formed in the shape of a flat plate, while wall surface 61 b of this pressing retaining member 61 (surface that makes contact with the side surface of ink cartridge 14 when door 41 is in the blocked position) is formed into a flat surface, and a pair of projecting strips 61c is formed on this wall surface 61b. Therefore, when door 41 is in the blocked position, these strips 61c make contact with and press against the side surface of ink cartridge 14.

[0057] Moreover, pressing retaining member 61 is configured such that, when in the blocked position, it presses slightly downward from the center position in the vertical direction of ink cartridge 14 (vertical direction in Figure 4). In other words, pressing retaining member 61 is provided in a position in which it makes contact and presses downward from the center position in the vertical direction of ink cartridge 14. This is for the purpose of improving the operationality in the case in which the user operates door 41. For example, when pressing retaining member 61 is positioned at or above the center position in the vertical direction of ink cartridge 14, the user operates door 41 by holding it in the vicinity of lock release lever 63, so the distance between the part that is operated by the user and the pressing retaining member 61 becomes small. Therefore, the force induced by coil spring 66 of pressing retaining member 61 becomes large, and a force that is large enough to operate door 41 therefore becomes necessary. On the other hand, when pressing retaining member 61 is positioned below the center position in the vertical direction of ink cartridge 14, the distance between the part that is operated by the user and pressing retaining member 61 is large, so the user is able to operate door 41 with a small amount of force. Moreover, when pressing retaining member 61 is positioned too far downward in the vertical direction of ink cartridge 14, it presses against the end of ink cartridge 14, so ink cartridge 14 sometimes slopes inside accommodating chamber 50, making it unable to hold ink cartridge 14 correctly. However, in this embodiment, pressing retaining member 61 is positioned slightly below the center position in the vertical direction of ink cartridge 14, so ink cartridge 14 can be installed or held correctly and can be installed smoothly with a small amount of force. Further, slightly below the center position in the vertical direction of ink cartridge 14 means that the center of the vertical direction of pressing retaining member 61 is positioned even lower than the center in the vertical direction of ink cartridge 14, and as long as this positional relationship is maintained, a portion of the top end of pressing retaining member 61 (upper edge of Figure 4) may be above the center position of ink cartridge 14.

[0058] Moreover, as will be described below, ink cartridge 14 of this embodiment is equipped with ink supply part 120 and ambient air intake part 130 on the side surface opposite the side surface that makes contact with pressing retaining member 61, and this ink supply part 120 and ambient air intake part 130 are equipped with valve mechanisms having an elastic force. In other words, they have a biasing force (first and second supply springs 630 and 650 and first and second ambient air springs 730 and 750) that presses the valves (supply valve 620 and ambient air valve 720) outward such that they block communication between the interior and exterior or ink cartridge 14. Therefore, in order to reliably enable communication between ink cartridge 14 and the exterior, the elastic force of pressing retaining member

61 of this embodiment is set such that it is larger than the elastic force of the valve mechanisms of ink supply part 120 and ambient air intake part 130. As a result, when ink cartridge 14 is installed inside accommodating chamber 50, the ink inside ink cartridge 14 is reliably supplied, and ambient air can be reliably introduced into ink cartridge 14. Moreover, ink supply part 120 is on the bottom end and ambient air intake part 130 is on the top part in the position in which ink cartridge 14 is installed in accommodating chamber 50, so pressing retaining member 61 presses against a position that is relatively close to the center position in the vertical direction of ink cartridge 14. Therefore, in comparison to the case in which it presses against either the top or bottom end of ink cartridge 14, the direction in which the momentum acts stabilizes, so ink cartridge 14 can be stabilized and held.

[0059] Door lock member 62 is attached to the top end of door main unit 60 (end of the top side in Figure 6). Door lock member 62 has main shaft part 62a, key part 62b that projects in the direction of the inside of case 40 continuing from the upper end of main shaft part 62a (upper side of Figure 6), and seat part 62c (contact part) that projects in the direction of the outside of case 40 continuing from the lower end of main shaft part 62a (lower side of Figure 6).

[0060] Door lock member 62 is supported such that it can advance and retreat in the vertical direction with respect to door main body 60 (vertical direction in Figure 6). Slide rail 60b extends in the vertical direction on the top end of door main body 60. Slide groove 62d, which extends in the vertical direction, is provided on main shaft part 62a of door lock member 62. Slide rail 60b of door main body 60 is inserted into this slide groove 62d, and door lock member 62 is configured such that it can freely slide up and down.

[0061] Claw 62e is provided on the bottom part of both sides of key part 62b of main shaft part 62a. When door lock member 62 is fitted into door main unit 60, claw 62e is housed in claw accommodating part 60c provided on door main body 60. This claw accommodating part 60c is configured from a groove that extends to exactly a prescribed length in the vertical direction. Therefore, when door lock member 62 slides upward or downward, claw 62e makes contact with the inside wall surface of claw accommodating part 60c, and the sliding of door lock member 62 in the vertical direction is thus restricted.

[0062] The sliding range of door lock member 62 is defined as a result of the setting of the length of the groove that constitutes claw accommodating part 60c to a prescribed dimension. When door lock member 62 slides upward with respect to door main body 60 and claw 62e makes contact with the top edge of the inside wall surface of claw accommodating part 60c, door lock member 62 is in the position in which it projects upward from the upper end of door main body 60. When door lock member 62 slides downward with respect to door main body 60 and claw 62e makes contact with the bottom edge of the inside wall surface of claw accommodating part 60c, door lock member 62 is in the position in which it retreats to the inside of door main body 60. In this specification, the position at which door lock member 62 makes contact with the top edge of the inside wall surface of claw accommodating part 60c is defined as the "projected position", and the position at which door lock member 62 makes contact with the bottom edge of claw accommodating part 60c is defined as the "retreated position".

[0063] Coil spring 67 (elastic member) is placed between door lock member 62 and door main body 60. Therefore, door lock member 62 is elastically biased such that it always projects upward from door main body 60 - in other words, in the direction in which it is displaced to the projection position.

[0064] The top surface of key part 62b of door lock member 62 is a sloped surface that slopes downward. Therefore, when door 41 changes from the open position to the blocked position, the top surface of door lock member 62 makes contact with the top edge of opening 45 of case 40, and when door 41 is rotated towards the blocked position, door lock member 62 retreats to the inside of door main body 60 as it is relatively pressed against the top edge of opening 45. When door 41 then completely changes to the blocked position, door lock member 62 once again projects from door main body 60, and key part 62b engages with the top edge of case 40.

[0065] At this time, key part 62b of door lock member 62 is in a state in which it is fitted into lock member fitting part 46 (see Figures 2 and 5), which is provided on the top edge of opening 45 of case 40. Door lock member 62 is elastically biased such that it always projects from door main body 60 due to coil spring 67, so it is pressed inside lock member fitting part 46, but the position of door lock member 62 is an intermediate position such that it retreats slightly more to the retreated position side than the projecting side. Door lock member 62 is always elastically pressed against lock member fitting part 46 when it is in the intermediate position, so door lock member 62 never easily deviates from lock member fitting part 46.

[0066] Lock release lever 63 is formed into the shape of a rectangular plate, and it is attached to the top of the outside of door main body 60 in a state in which it is fastened to case 40. Door main body 60 is equipped with accommodating part 60d, which houses lock release lever 63. This accommodating part 60d consists of a concave part that is provided on door main body 60. This will be described below, and when lock release lever 63 changes positions, lock release lever 63 is fitted into accommodating part 60d.

[0067] Supporting pin 63a is provided on the bottom end of lock release lever 63. At the same time, pin support hole 60e, into which supporting pin 63a is fitted, is provided on door main body 60. Because supporting pin 63a is fitted into this pin support hole 60e, lock release lever 63 is configured such that it can rotate freely around the rotational center of supporting pin 63a. Specifically, lock release lever 63 is configured such that it can be freely

rotated and displaced between a position that is roughly parallel to the outer surface of door main body 60, a position in which it is inclined at approximately 45° (degrees) (state of door 41 on right side of Figure 2), and a position in which it is folded over roughly horizontally (state of the 2nd door 41 from the right side of Figure 2) by moving the lever. In this specification, the position of lock release lever 63 when it is housed inside accommodating part 60d is defined as the "housed position", and the position of lock release lever 63 when lock release lever 63 is inclined at approximately 45° is defined as the "neutral position", while the position of lock release lever 63 when it is folded over roughly horizontally is defined as the "folded position".

[0068] The bottom end of lock release lever 63 is interlocking cam 63b, and interlocking cam 63b is for sliding door lock member 62 up and down when the position of lock release lever 63 changes. Because interlocking cam 63b is provided, when lock release lever 63 is rotated from the housed position, through the neutral position, and to the folded position, door lock member 62 slides from the projected position, through the intermediate position, and to the retreated position. Put the other way around, when door lock member 62 is in the projected position, lock release lever 63 is placed in the housed position and door 41 is closed, and in the state in which door lock member 62 makes contact with lock member fitting part 46 of case 40, lock release lever 63 can be freely displaced between the housed position and the neutral position. At this time, the central position of lock release lever 63 is set such that it always moves to the neutral position due to its own weight. Because lock release lever 63 arrives in the neutral position due to its own weight, it is possible to improve the operationality into the folded position.

[0069] Here, the outline of the operation of lock release lever 63 will be described. Interlocking cam 63b of lock release lever 63 makes contact with seat part 62c of door lock member 62. In the state in which door 41 is closed (state illustrated in Figure 4), lock release lever 63 attempts to further rotate door lock member 62 through interlocking cam 63b in a direction pressing downward. However, door lock member 62 is always elastically biased upward by coil spring 67, so door lock member 62 is not displaced by the action of the weight of lock release lever 63 alone, and door lock member 62 is maintained in the intermediate position.

[0070] However, when lock release lever 63 is forcibly rotated - for example, in the case in which a user attempting to replace ink cartridge 14 operates and rotates lock release lever 63 - lock release lever 63 is rotated and displaced to the folded position. When lock release lever 63 is displaced to the folded position, interlocking cam 63b rotates and changes the position centered on supporting pin 63a and presses seat part 62c of door lock member 62 downward. As a result, door lock member 62 moves downward in opposition to the elastic force of coil spring 67 and is displaced to the retreated position. When door lock member 62 is displaced to the retreated position, the lock of door 41 is released, and this door 41 changes from the blocked position to the open position.

[0071] Door lock member 62 constantly receives the elastic force of coil spring 67, so if the rotational force that acts upon lock release lever 63 disappears - in other words, if the user releases his or her hand from lock release lever 63 - door lock member 62 arrives in a position in which it projects most from door main body 60, and lock release lever 63 is forcibly displaced to the housed position. In other words, when door 41 is in the open position, lock release lever 63 is in the position in which it is almost completely housed inside door main body 60. Therefore, when replacing ink cartridge 14, because lock lever 92 is almost completely housed inside door main unit 60, rotating is possible with rotating shaft part 64 as the center of rotation to the point that door 41 is nearly horizontal, so the user can easily replace ink cartridge 14. Moreover, the two strips 61c that are provided on wall surface 61b of pressing retaining member 61 also operate as guides when housing ink cartridge 14 inside accommodating chamber 50 in cooperation with a guide part between curved parts 65b. In other words, when ink cartridge 14 is to be inserted into accommodating part 50, the user may load the bottom surface of ink cartridge 14 onto strips 61 c, place the tip part of ink cartridge 14 between curved parts 65b, and then press ink cartridge 14 in the direction of accommodating chamber 50. Further, when ink cartridge 14 is to be removed from accommodating chamber 50, the user should remove it until the bottom surface of ink cartridge 14 reaches the top of strips 61c from between curved parts 65b.

[0072] When multifunction device 1 is in normal use, door 41 of refill unit 13 is closed, and lock release lever 63 is placed in the neutral position. Therefore, as illustrated in Figure 1, when opening/closing cover 20 is opened when replacing ink cartridge 14, lock release lever 63 slopes to the front surface side. As a result, there is the advantage that the user can easily operate lock release lever 63. Incidentally, as illustrated in Figure 1, refill unit 13 is placed on front surface 1a of multifunction device 1, so if lock release lever 63 is placed in the neutral position (if it slopes to the front surface side), then it is necessary for a space that is wide enough to accommodate refill unit 13 to be secured inside multifunction device 1. Therefore, it is necessary for refill unit 13 to be placed further back from the rim of opening 21, resulting in the risk that the external dimensions of multifunction device 1 will become large. However, in this embodiment, lock release lever 63 can rotate freely between the neutral position and the housed position when door 41 is in the blocked position with respect to case 40, so refill unit 13 can be placed in the vicinity of the rim of opening 21. This is because even if refill unit 13 placed on the rim of opening 21, the inside wall surface of opening/closing cover 20 makes contact with lock release lever 63 when opening/closing cover 20 is closed, and when opening/closing cover 20 is completely closed, lock release lever 63 is

displaced to the housed position as it is pressed by opening/closing cover 20. Therefore, in this embodiment, a compact design for multifunction device 1 can be realized.

[0073] Next, ink cartridges 14 that are used in this embodiment will be described with reference to Figures 7 to 13. Ink cartridges 14 are for the purpose of storing ink in advance, and cyan, magenta, yellow, and black colored ink is stored in each ink cartridge 14. However, with regard to the structure of each ink cartridge 14, ink cartridge 14 that stores black ink is formed such that it is slightly thicker than the ink cartridges 14 that store the other colors of ink. This is because the demand for black ink is generally the highest and it is expended in large quantities and because black ink consists of pigmented inks, while colored inks consist of dyed inks, so when black ink is mixed with colored ink, large quantities of colored ink must be expended for the recovery process. Therefore, the external shape of the black ink is formed into a large shape such that colored ink and black ink can be visually confirmed. Moreover, the structures of ink cartridges 14 that store colored inks are all formed into the same shapes.

[0074] First, colored ink cartridges 14 for storing colored ink will be described with reference to Figures 7 to 9. Figure 7 is an oblique view showing the external appearance of a colored ink cartridge 14. Figure 8 is an exploded oblique view of the colored ink cartridge 14. Figure 9 is a diagram showing protector 300, and (a) is a top surface view of protector 300 from the perspective of IXa in Figure 8, while (b) is a cross-sectional view of protector 300 through line IXb-IXb in Figure 9(a). In the following description, the X-direction indicates the longitudinal direction of ink cartridge 14 (case 200, ink reservoir element 100), the Y-direction indicates the height direction of ink cartridge 14 (case 200, ink reservoir element 100), which is orthogonal to the X-direction, and the Z-direction indicates the width direction (thickness direction) of ink cartridge 14 (case 200, ink reservoir element 100), which is orthogonal to the X-direction and the Y-direction. Arrow B illustrated in Figure 8 is parallel to the X-direction, which indicates the longitudinal direction of ink cartridge 14, and it indicates the direction in which ink cartridge 14 is installed into refill unit 13.

[0075] As illustrated in Figure 7, colored ink cartridge 14 is equipped with case 200, which covers roughly the entire body of ink reservoir element 100 that stores ink (see Figure 8), and protector 300, which is attached to this case 200 and protects ink reservoir element 100 when ink cartridge 14 is fed. As is clear from Figure 7, case 200 is formed into a rectangular parallelepiped that contains a pair of largest surfaces 210a and 220a that oppose one another (cases 1200 and 2200 explained below are the same). In this embodiment, ink reservoir element 100, case 200, protector 300, and all of the members contained in ink cartridge 14 described below are formed from resin materials and do not contain metal materials, so they can be burned at the time of disposal. For example, nylon, polyester, or polypropylene can be used as resin materials.

[0076] As illustrated in Figure 8, ink reservoir element 100 is primarily equipped with frame part 110, which forms ink reservoir chamber 111 that stores ink (inner space and reservoir space including ink reservoir chamber 111), ink supply part 120, which supplies ink stored in this frame part 110 to multifunction device 1 (see Figure 1), ambient air intake part 130, which introduces ambient air into frame part 110, detection part 140 (irradiated part), which is provided in order to detect the amount of remaining ink stored inside frame part 110, ink dispensing part 150, which dispenses ink into frame part 110, and film 160, which is welded to both sides of frame part 110 (both top and bottom surfaces in Figure 8) in order to form an ink reservoir chamber on frame part 110. Descriptions of frame part 110, ink supply part 120, ambient air intake part 130, detection part 140, ink dispensing part 150, and film 160 and the manufacturing process for ink reservoir element 100 will be given below.

[0077] Case 200 comprises two case elements 210 and 220 that sandwich ink reservoir element 100 from above and below (top and bottom of Figure 8; Z-direction). First case member 210 is a member that covers the bottom side surface of ink reservoir element 100 in Figure 8, and second case element 220 is a member that covers the top side surface of ink reservoir element 100 in Figure 8. First and second case members 210 and 220 are made of resin materials and are manufactured using injection molding. The depths of first and second case members 210 and 220 (lengths in the upward direction of Figure 8 (lengths in the Z-direction)) are formed such that they are roughly equivalent, and they are formed such that the sum of these depths is roughly equivalent to the thickness of ink reservoir element 100. As a result, the distance between ink reservoir element 100 and the inside surface of case 200 becomes small (the gap becomes narrow), so even if pressure were applied inward from the outside of case 200, the amount of deformation of case 200 would become small, so it would be possible to reduce the damage of case 200.

[0078] First case member 210 comprises a plate-shaped part that forms largest surface 210a and vertical wall parts 210b-210e that are provided in roughly orthogonal directions (vertical directions and Z-direction in Figure 8) from the outer edge portions of the four sides of this plate-shaped part. Regarding vertical wall parts 210d-210e, the vertical wall that forms the protector 300 side of first case member 210 is 210b, the vertical wall that is placed opposite this vertical wall part 210b is 210c, and the vertical walls that are respectively connected to vertical wall parts 210c and 210b are vertical wall parts 210d and 210e (the right side of Figure 8 is vertical wall part 210d, and the left side of Figure 8 is vertical wall part 210d).

[0079] Two case cutout parts 211 and 212 for the purpose of exposing ink supply part 120 and ambient air intake part 130 to the outside of case 200 are formed on

vertical wall part 210b of first case member 210. Case cutout parts 211 and 212 are formed into roughly semicircular shapes from the edges of vertical wall part 210b, and case cutout part 211 on the right front side of Figure 8 is a cutout corresponding to ink supply part 120, while case cutout part 212 on the left back side of Figure 8 is a cutout corresponding to ambient air intake part 130. Rectangular case cutout part 213, which is cut out into a rectangular shape, is formed between case cutout part 211 and case cutout part 212, and this is a cutout for inserting remaining ink detection sensor 57 (see Figure 5) to the position at which it sandwiches detection part 140. Contact groove 211a, which makes contact with ink supply part 120, is formed on the inside surface connecting to case cutout part 211 of first case member 210, and contact groove 212b, which makes contact with ambient air intake part 130, is formed on the inside surface connecting to case cutout part 212 of first case member 210. Because these contact grooves 212a and 212b are provided, the alignment of ink reservoir element 100 with first case member 210 becomes easy.

[0080] Moreover, two case projecting parts 214a and 214b, which project in the direction of protector 300 (left front direction and X-direction in Figure 8) from the surface on which case cutout parts 211-213 are formed (vertical wall part 210b), are formed on first case member 210. Case projecting parts 214a and 214b are formed on both sides of first case member 210 in the Y-direction (right front side end and left back side end of Figure 8) such that they sandwich case cutout parts 211 to 213, and the ink supply part 120 side (right front side of Figure 8) is case projecting part 214a, while the ambient air intake part 130 side (left back side of Figure 8) is case projecting part 214b. Case projecting part 214a has sloping surface 214a2, which slopes in the direction of case cutout parts 211 to 213 (direction of the inside of first case member 210) towards the edge from the portion that connects to the outside surface of vertical wall part 210d of the case member 210 (protector 300 direction; left front direction in Figure 8). When ink cartridge 14 is to be installed into multifunction device 1 (see Figure 1), it is installed such that case projecting part 214a is on the bottom side. As a result, in the case in which ink cartridge 14 is installed, when sloping surface 214a2 makes contact with bottom wall part 41 of refill unit 13, ink cartridge 14 is smoothly led to the prescribed installation position due to its slope.

[0081] On case projecting part 214a, case projecting cutout part 214a1, which is cut out into a rectangular shape, is formed on the inside surface that forms the side of case cutout parts 211 to 213. On case projecting part 214b, Case projecting cutout part 214b1, which is also cut out into a rectangular shape, is also formed on the inside surface that forms the side of case cutout parts 211 to 213. These case projecting cutout parts 214a1 and 214b1 are provided in order to prevent the natural desorption of protector 300 in the state in which protector 300 is attached to case 200, and protruding parts 330a1 and 330b1 of protector 300, which will be described below, are fitted into these parts (see Figure 9).

[0082] Further, case fitting groove 214b2, which is used as a fitting part into which first protector fitting part 320 of protector 300 (see Figure 9) described below, is formed on case projecting part 214b. This case fitting groove 214b2 is formed across a portion of vertical wall part 210e from the edge of case projecting part 214b (edge of the protector 300 side).

[0083] Moreover, rod member 215a, which protrudes in the direction of second case member 220 (Z-direction) in the vicinity of vertical wall part 210d on the ink supply part 120 side (right front side of Figure 8) and determines the position of ink reservoir element 100 sealed inside case 200, and rod members 215b and 215c, which protrude in the direction of second case member 220 (Z-direction) in the vicinity of vertical wall part 210e on the ambient air intake part 130 side (left back side of Figure 8) and determine the position of ink reservoir element sealed inside case 200, are formed on first case member 210. The position of ink reservoir element 100 is determined by the three locations of these rod members 215a to 215c, so they can prevent the attachment of ink reservoir element 100 in mistaken directions.

[0084] Second case member 220 comprises a plate-shaped part that forms largest surface 220a and vertical wall parts 220b to 220e that are provided in roughly orthogonal directions (vertical directions and Z-direction in Figure 8) from the outer edge portions of the four sides of this plate-shaped part. Regarding vertical wall parts 220b to 220e, the vertical wall that forms the protector 300 side of second case member 220 is 220b, the vertical wall that is placed opposite this vertical wall part 220b is 220c, and the vertical walls that are respectively connected to vertical wall parts 220c and 220b are vertical wall parts 220d and 220e (the right side of Figure 8 is vertical wall part 220d, and the left side of Figure 8 is vertical wall part 220d).

[0085] Second case member 220 has a symmetrical structure that is roughly symmetrical to first case member 210. As with first case member 210, three case cutout parts 221 to 223 are formed on vertical wall part 220b, and contact groove 221a connected to case cutout part 221 and contact groove 222a connected to case cutout part 222 are also formed. Case cutout parts 221 and 222 are formed into the same shapes as case cutout parts 211 and 212 of first case member 210 (roughly semicircular shapes), and case cutout part 223 is formed into the same shape as case cutout part 213 of first case member 210 (roughly rectangular shape). Moreover, case projecting parts 224a and 224b are formed on both sides of case cutout parts 221 to 223, and case projecting part 224a has sloping surface 224a2 that slopes in the direction of case cutout parts 221 to 223 towards the edge from the portion that connects to the outside surface of vertical wall part 210d of second case member 220. Case projecting cutout part 224a1 (not illustrated in the figure) is formed on case projecting part 224a, and case

projecting cutout part 224b1 and case fitting groove 224b2 are formed on case projecting part 224b across a portion of vertical wall part 220e from the edge of case projecting part 224b. On second case member 220, fitting hole parts 225a to 225c (not illustrated in the figure) having holes into which rod members 215a-215c fit after passing through in the direction of first case member 210 (Z-direction) corresponding to the positions at which rod members 215a to 215c of first case member 210 are formed.

[0086] As described above, first case member 210 and second case ember 220 of case 200 are formed into roughly the same shapes, and when they are in the state in which they hold ink reservoir element 100, roughly circular through-holes that expose a portion of ink supply part 120 to the outside are formed by case cutout parts 211 and 221, while roughly circular through-holes that expose a portion of ambient air intake part 130 to the outside are formed by case cutout parts 212 and 222. Through-holes into which remaining ink detection sensor 57 (see Figure 5) can be inserted are formed on both sides of detection part 140 (both the top and bottom sides in Figure 8; both sides in the Z-direction) by case cutout holes 213 and 223 and the side wall of detection part 140. Further, a protrusion ("first projecting part", or "other projecting part") that contributes to the prevention of ink contamination of refill unit 13, the prevention of the installation of the cartridge into refill unit 13 in the wrong position, and the prevention of the damage of ink supply part 120 and ambient air intake part 130 is formed by case projecting part 214a and case projecting part 224a, and a protrusion ("second projecting part", or "one projecting part") that contributes to the prevention of the aforementioned installation in the wrong position together with the protrusion that is formed from case projecting part 214a and case projecting part 224a and the prevention of the damage of parts such as ink supply part 120 is formed by case projecting part 214b and case projecting part 224b. These protrusions will be described in detail below. Moreover, as is clear from Figure 8, ink supply part 120 is positioned closer to the protrusion formed from case projecting part 214a and case projecting part 224a than the protrusion formed by case projecting part 214b and case projecting part 224b. A through-hole into which projecting part 330a1 of protector 300 (see Figure 9) is loosely inserted is formed by case projecting cutout parts 214a1 and 224a1, and a through-hole into which projecting part 330b1 of protector 300 (see Figure 9) is loosely inserted is formed by case projecting cutout parts 214b1 and 224b1, while a fitting groove in the shape of a roughly rectangular parallelepiped into which first protector fitting part 320 of protector 300 (see Figure 9) is fitted is formed by case fitting grooves 214b2 and 224b2.

[0087] As is clear from the above explanations, first case member 210 and second case member 220 do not only have the same overall external appearance, but they are formed such that details such as case projecting parts 214a, 214b, 224a, and 224b and case cutout parts 211 to 213 and 221 to 223 also have the same shapes. Therefore, when first case member 210 and second case member 220 are resin-molded, their die shapes are similar, so costs associated with die design can be reduced.

[0088] Next, the external shape of case 200 will be described. On first and second case members 210 and 220, vertical wall parts 210d, 210e, 220d, and 220e (side surfaces of both sides) in directions (Y-direction) that are orthogonal to longitudinal direction B (X-direction connecting the right back side of Figure 8 and the left front side of Figure 8; arrow B in Figure 8) are formed into concave shapes, and steps are formed with respect to largest surfaces 210a and 220a (surfaces) of first and second case members 210 and 220. First and second case members 210 and 220 are welded to these step portions, and ink reservoir element 110 is fastened to case 200. Regarding these step portions, the step portions on the side of ink supply part 120 (right front side of Figure 8) are first case welded parts 216 and 226, and the step portions on the side of ambient air intake part 130 (left back side in Figure 8) are second case welded parts 217 and 227.

[0089] In the following explanation, longitudinal direction B of first and second case members 210 and 220 (direction parallel to the X-direction) refers to the longitudinal direction of ink cartridge 14, the longitudinal direction or ink reservoir element 100, and the longitudinal direction of case 200.

[0090] Here, first and second case welded parts 226 and 227 of second case 220 will be described. First case welded part 226 is connected to case projecting part 224a in the same plane, and on the opposite side as case projecting part 224a, it has concave part 226a, which is formed into a concave shape in the direction of the inside of second case member 220, and engagement part 226b that engages with pullout member 65 of door 41 (see Figure 6) when ink cartridge 14 is removed from refill unit 13 (see Figure 1). Concave part 226a is a region for securing the oscillating range when pullout member 65 rotates. Case welded part 227 has latch part 227a, which is formed into a concave shape in roughly intermediate position of longitudinal direction B of second case member 220, and this latch part 227a is a part that engages with swing arm mechanism 44b (see Figure 2) in the state in which it is installed in refill unit 13.

[0091] Although a detailed description will be omitted here, concave part 216a (not illustrated in the figure), engagement part 216b (not illustrated in the figure), and latch part 217a (not illustrated in the figure), which are formed with roughly the same shapes as concave part 226a, engagement part 226b, and latch part 227a of second case member 220, are also formed on first case member 210.

[0092] Next, protector 300 will be described with reference to Figures 8 and 9. Figure 9 is a diagram that shows protector 300, and Figure 9(a) is a top view of protector 300 from the perspective of IXa in Figure 8, while Figure 9(b) is a cross-sectional view of protector

300 through line IXb-IXb in Figure 9(a). Protector 300 is a member for protecting ink supply part 120 and ambient air intake part 130, in particular, of ink reservoir element 100 when ink cartridge 14 is shipped. Protector 300 is made from a resin material and is manufactured using injection molding.

[0093] As illustrated in Figure 8, protector through-hole 310 is formed on protector 300 in a location corresponding to the side of ambient air intake part 130 (left back side in Figure 8) on the bottom surface. This is because valve open part 721a for operating ambient air valve 720 (see Figure 33) projects outward from ambient air intake part 130, and protector through-hole 310 is formed in order to protect this valve open part 721 a.

[0094] As illustrated in the top view of Figure 9(a), first protector fitting part 320, which is fitted into the fitting groove formed by case fitting grooves 214b2 and 224b2 (see Figure 8), is formed in the vicinity of the end of the side of protector through-hole 310 of protector 300 (left side in Figure 9(a)). Second protector fitting part 330a, which is fitted into the through-hole formed by case projecting cutout parts 214a1 and 224a1 (see Figure 8) and fastens protector 300 to case 200, is formed in the vicinity of the end of the opposite side as the side on which first protector fitting part 320 is formed (right side in Figure 9 (a)), and second protector fitting part 330b, which is fitted into the through-hole formed by case projecting cutout holes 214b1 and 224b1 (see Figure 8) and fastens protector 300 to case 200, is provided between first protector fitting part 320 and protector through-hole 310.

[0095] Moreover, protector loose insertion parts 340a and 340b, which are lightly inserted into the through-holes formed by case cutout parts 213 and 223 and the side wall of detection part 140 (see Figure 8), are formed in roughly intermediate positions in longitudinal direction C of protector 300 (Y-direction in Figures 8 and 9). Protector loose insertion parts 340a and 340b are connected to both side walls formed parallel to longitudinal direction C (top and bottom side walls in Figure 9(a)), and they are formed such that they project upward (X-direction on the front side of the page in Figure 9(a) and on the side of ink reservoir element 100 in Figure 8). Multiple ribs are formed from the bottom surface of protector 300, and these ribs maintain the strength of protector 300.

[0096] First protector fitting part 320 is positioned such that it extends in a direction parallel to a direction orthogonal to longitudinal direction C of protector 300 (vertical direction in Figure 9(a); X-direction), and consists of protector vertical wall 321 provided from the bottom wall of protector 300 and two protector vertical walls 322 that are connected to the side wall on the opposite side as protector through-hole 310 from protector vertical wall 321 (left side in Figure 9(a)). As illustrated in Figure 9(b), each protector vertical wall 322 consists of a top part formed parallel to protector vertical wall 321 from the top end of first protector fitting part 320 (top side end in Figure 9(b)) and a bottom part connected to the side wall of protector 300 from a roughly intermediate position in the projecting direction of first protector fitting part 320 (upward in Figure 9(b); X-direction), and they have steps.

[0097] As a result, when fitted into the fitting groove formed by case fitting grooves 214b2 and 224b2 (see Figure 8), protector vertical wall 321 and the top of protector vertical wall 322 are inserted into the fitting groove. When first protector fitting part 320 is inserted into the fitting groove, it is inserted as it is restricted by both ends of protector vertical wall 321, which extends in the Z-direction orthogonal to longitudinal direction C (Y-direction), and the end of protector vertical wall 322 in longitudinal direction C. Here, if first protector fitting part 320 is formed with roughly the same shape as the fitting groove formed by case fitting grooves 214b2 and 224b2 (see Figure 8), the attachment of protector 300 takes time and effort, and if protector fitting part 320 is extremely small in comparison to the fitting groove, the position of the attachment direction of protector 300 cannot be determined. However, because it is inserted as it is restricted by protector vertical walls 321 and 322 at one surface (flat surface of protector vertical wall 321) and four points (ends of both sides of protector vertical wall 321 and two ends of protector vertical wall 322) the installation properties of protector 300 are improved, and mistaken installation can be prevented.

[0098] As illustrated in Figure 9(b), protruding parts 330a1 and 330b1, which protrude away from one another, are formed on the edges of second protector fitting parts 330a and 330b in the direction in which second protector fitting parts 330a and 330b mutually separate (edges on the top side of Figure 9(b)), and shaft parts 330a2 and 330b2, which are formed into roughly cylindrical shapes, are formed in the direction of the bottom surface of protector 300 from these edges (downward in Figure 9(b)). Shaft parts 330a2 and 330b2 have elasticity because protector 300 is formed from a resin material, and protector 300 is attached and removed as second protector fitting parts 330a and 330b are elastically deformed in the inside direction.

[0099] Here, black ink cartridge 14 will be described with reference to Figures 10 and 11. Figure 10 is an oblique view that shows the external appearance of black ink cartridge 14. Figure 11 is an exploded oblique view of black ink cartridge 14.

[0100] As illustrated in Figures 10 and 11, black ink cartridge 14 is configured such that its external profile is larger (the thickness (length in the Z-direction) is larger) than that of colored ink cartridges 14. Specifically, second case member 220, which constitutes case 1200, is identical to second case member 220 for colored ink, and first case member 1210, which constitutes case 1200, is formed such that it is thicker (the length in the Z-direction is large) than first case member 210 for colored ink. Ink reservoir element 100 has sufficient capacity to store black ink, so it is configured with the same shape as colored ink reservoir element 100 and uses the same parts. Moreover, protector 1300 is formed corresponding to case 1200, and it is formed such that it is thicker in the

vertical direction (Z-direction) than protector 300. Therefore, black ink cartridge 14 will be described with regard to first case member 1210, and descriptions of second case member 220, ink reservoir element 100, and protector 1300 will be omitted here. Only the depth of first case member 1210 (the thickness of vertical directions (length of Z-direction) in Figure 11) the differs from that of first case member 210, and the rest of its configuration is the same, so it detailed description will be omitted here.

[0101] As illustrated in Figure 11, first case member 1210 comprises a plate-shaped part that forms largest surface 1210a and vertical wall parts 1210b to 1210e that are provided in roughly orthogonal directions (vertical directions and Z-direction in Figure 11) from the outer edge portions of the four sides of this plate-shaped part. Regarding vertical wall parts 1210b to 1210e, the vertical wall that forms the protector 1300 side of first case member 1210 is 1210b, the vertical wall that is placed opposite this vertical wall part 1210b is 1210c, and the vertical walls that are respectively connected to vertical wall parts 1210c and 1210b are vertical wall parts 1210d and 1210e (the right side of Figure 11 is vertical wall part 1210d, and the left side of Figure 11 is vertical wall part 1210d). Black ink cartridge 14 is formed such that the vertical wall heights of vertical wall parts 1210b to 1210e are roughly twice the vertical wall heights of vertical wall parts 210b to 210e of first case member 210 for colored ink, and the thickness of ink cartridge 14 is accordingly increased.

[0102] As with first case member 210, case cutout parts 1211 and 1212, which are formed into roughly semicircular shapes on vertical wall part 1210b, are formed on first case member 1210 in order to expose ink supply part 120 and ambient air intake part 130 to the outside of case 200, and case cutout part 1213, which is cut out into a rectangular shape, is formed between case cutout part 1211 and case cutout part 1212. Two case projecting parts 1214a and 1214b are formed on both sides of first case member 1210, and case projecting part 1214a has sloping surface 1214a2. Rod members 1215a, 1215b and 1215c, which determine the position of ink reservoir element 100, are formed on first case member 1210.

[0103] Further, rib 1218 is formed on roughly the entire inside surface of first case member 1210 (roughly the entire largest surface 1210a). This rib 1218 projects in the Z-direction towards the side of ink reservoir element 100 to the degree that the external profile of first case member 1210 is enlarged with respect to first case member 210 (difference in heights of vertical wall parts 210b to 210e of first case member 210 and vertical wall parts 1210b to 1210e of first case member 1210). Because this rib 1218 is provided, the space (gap) formed between ink reservoir element 100 and first case 1210 can be filled. It is therefore possible to maintain the strength of case 1200 against pressure from the outside.

[0104] Moreover, by making the external profile of black ink cartridge 14 larger than that of colored ink cartridge 14, it is possible to differentiate between black ink cartridge 14 and other ink cartridges 14. Black is a darker color than other colors, so it is not preferable for it to be mistakenly loaded into refill unit 13 and used. However, because the external profile of black ink cartridge 14 is made large, it can be differentiated from other ink cartridges 14, so mistaken installations can be reduced. Further, accommodating chamber 50 inside refill unit 13 is formed according to the size of each ink cartridge 14, so black ink cartridge 14 is never installed into accommodating chamber 50 corresponding to a colored ink cartridge 14.

[0105] In black ink cartridge 14, the thicknesses of first case member 1210 and second case member 220 in the vertical direction (Z-direction) differ, so ink supply part 120, ambient air supply part 130, and detection part 140 are positioned in positions shifted from the center position in the vertical direction (biased position).

[0106] Next, large-capacity black ink cartridge 14 will be described with reference to Figures 12 and 13. Figure 12 is an oblique view that shows the external appearance of large-capacity black ink cartridge 14. Figure 13 is an exploded oblique view of large-capacity black ink cartridge 14.

[0107] As illustrated in Figures 12 and 13, the external profile of large-capacity black ink cartridge 14 is configured such that it is larger (longer in the Z-direction) than colored and black ink cartridges 14. Specifically, the vertical wall heights of vertical wall parts 2220b to 2220e of second case member 2220 are formed such that they are roughly twice the vertical wall heights of vertical wall parts 220b to 220e of second case member 220, and second case member 2220, which constitutes case 2200, is simply made thicker than second case member 220 for colored and black ink. Moreover, in first case member 2210, which constitutes case 2200, rib 1218 of first case member 1210 for black ink is simply removed. Further, ink reservoir element 2100 is simply thickened such that the capacity increases with respect to colored and black ink reservoir element 100. Therefore, detailed descriptions of large-capacity black ink cartridge 14 will be omitted here. For the reference numerals attached to large-capacity black ink cartridge 14, the reference numeral 2000 is added to the reference numerals attached to colored ink cartridge 14. The thicknesses of first case member 2210 and second case member 2220 in the vertical direction (Z-direction) are roughly equivalent, so ink supply part 2120, ambient air supply part 2130, and detection part 2140 are positioned in the center position in the vertical direction.

[0108] Corresponding to ink cartridges with the three types of sizes described above, it is desirable for refill unit 13 of multifunction device 1 to be configured such that it is equipped with multiple accommodating chambers 50 that house cored ink cartridges 14 and a single accommodating chamber 50 that selectively houses black ink cartridge 14 and large-capacity black ink cartridge 14 (the inner space of this accommodating chamber 50 has a sized corresponding to large-capacity black ink cartridge 14). This is because the frequency of text

printing using only black ink is generally higher than that of color printing. However, a type of multifunction device 1 in which refill unit 13 is configured such that it is equipped with multiple accommodating chambers 50 that house colored ink cartridges 14 and a single accommodating chamber 50 that houses black ink cartridge 14 may be provided for users that infrequently use text printing. This will be described once again below.

[0109] Next, ink reservoir element 100 will be described with reference to Figure 14. Figure 14 is a diagram that shows ink reservoir element 100, and Figure 14(a) is a front view of ink reservoir element 100, while Figure 14(b) is a back view of ink reservoir element 100. The state of ink reservoir element 100 illustrated in Figure 14 is the position in which ink cartridge 14 is installed in multifunction device 1 (see Figure 1). As illustrated in Figure 14, this is a position in which the longitudinal direction (X-direction) and the width direction (Z-direction) of ink cartridge 14 (ink reservoir element 100) are horizontal directions, and it is a state in which ink supply part 120, ambient air intake part 130, and detection part 140 are positioned on the side surface, ink supply part 120 is positioned on the bottom part side, and ambient air intake part 130 is positioned on the ceiling side. Ink reservoir element 2100 differs from ink reservoir element 100 only with regard to its thickness (length in the X-direction), so its detailed description will be omitted here.

[0110] As described above, ink reservoir element 100 is primarily equipped with frame part 110, ink supply part 120, ambient air intake part 130, detection part 140, ink dispensing part 150, and film 160. Moreover, ink reservoir element 100 is configured roughly as a flat hexahedron. The pair of surfaces that constitute the largest area of this hexahedron is the front surface side and the back surface side of ink reservoir element 100 illustrated in Figure 14, and it is configured with approximately six surfaces with the side surfaces (side walls) positioned in four directions that connect this front surface side and the back surface side. The pair of surfaces that constitute the largest area of ink reservoir element 100 are parallel to the pair of largest surfaces 210a and 220a of case 200 when loaded into case 200. Moreover, film 160 is welded to both the front surface side and the back surface side of frame part 110, so the thickness of ink reservoir element 100 (length in the Z-direction), which is formed into a flat shape, can be reduced in comparison to the case in which both sides are blocked by plate materials.

[0111] First, frame part 110 will be described in detail. Frame part 110 is manufactured by injection molding using a resin material, and it has translucence because it is formed to be translucent (or transparent). This is because, as described below, light that is emitted from light emitting part 57a of remaining ink detection sensor 57 positioned on both sides of detection part 140 is transmitted to light receiving part 57b in order to detect the amount of remaining ink in ink reservoir element 100.

[0112] As illustrated in Figure 14(a), outer circumference welded part 400a, which welds film 160 to the vicinity of the outer edge part, and multiple inner circumference welded parts 411a to 417a, which are provided on the inside of this outer circumference welded part 400a, are formed on the front surface side of frame part 110. Outer circumference welded part 400a is a vertical wall that demarcates the inner space of frame part 100 (space on the side of first chamber 111a of ink reservoir chamber 111). Moreover, the blackened edge portions of the inner circumference welded parts (ribs or first ribs) 411a to 417a illustrated in Figure 14(a) are welded surface parts (rib fixed parts or first rib fixed parts), and the front surface side edge (blackened portion) of outer circumference welded part 400a is the welded surface part (fixed part) on the periphery of first opening 112a. Film 160 is welded to this welded surface part by ultrasonic welding.

[0113] As illustrated in Figure 14(b), outer circumference welded part 400b, which welds film 160 to the vicinity of the outer edge part, and multiple inner circumference welded parts 411a to 417b, which are provided on the inside of this outer circumference welded part 400b, are formed on the back surface side of frame part 110. Outer circumference welded part 400b is a wall demarcating the interior space of frame 100. Outer circumference welded part 400b is a vertical wall that demarcates the inner space of frame part 100 (space on the side of second chamber 111 b of ink reservoir chamber 111). Moreover, the blackened edge portions of inner circumference welded parts (ribs or second ribs) illustrated in Figure 14(b) are welded surface parts (rib fixed parts or second rib fixed parts) 411b to 417b, and the back surface side edge (blackened portion) of the outer circumference welded part 400b is the welded surface part (fixed part) on the periphery of the opening. Film 160 is welded to this welded part by ultrasonic welding.

[0114] The inside of outer circumference welded parts 400a and 400b constitutes ink reservoir chamber 111 in which ink is stored. The region on the front surface side illustrated in Figure 14(a) is first chamber 111a of ink reservoir chamber 111, and the region on the back surface side illustrated in Figure 14(b) is second chamber 111b of ink reservoir chamber 111. Moreover, outer circumference welded part 400a illustrated in Figure 14(a) is first opening 112a of frame part 110, and outer circumference welded part 400b illustrated in Figure 14(b) is second opening 112b of frame part 110.

[0115] Frame 110 is primarily equipped with supply path forming part 420 (see Figures 14(a) and 14(b)), which communicates with ink supply part 120 and supplies ink stored inside ink reservoir chamber 111 to the outside, ambient air communicating passage forming part 430 (see Figure 14(a)), which communicates with ambient air intake part 130 and introduces ambient air into ink reservoir chamber 111, plate-shaped link forming part 440 (see Figures 14(a) and 14(b)), which is formed in roughly the center of frame part 110 (or ink reservoir chamber 111) and connects the vicinity of ambient air intake part 130 to the vicinity of ink dispensing part 150,

and dispensing passage forming part 450 (see Figure 14 (b)), which communicates with ink dispensing part 150 and dispenses ink into ink reservoir chamber 111. Here, link forming part 440 partitions first chamber 111a and second chamber 111b of ink reservoir chamber 111 in a state in which they communicate with one another, and it is a linking plate that is between virtual plane R (not illustrated in the figure), in which film 160 that is welded to outer circumference welded part 400a extends, and virtual plane S (not illustrated in the figure), in which film 160 that is welded to outer circumference welded part 400b extends, and extends in a plane parallel to these virtual planes. This link forming part 440 will be described in detail in a later process. Ambient air passage forming part 430 is formed such that it is positioned only on the front surface side of frame part 110 (side of first chamber 111a of ink reservoir chamber 111), and it is roughly partitioned by plate part 438, which extends parallel to these planes between a portion of outer circumference welded part 400a and inner circumference welded part 412a and virtual planes R and S. This ambient air communicating passage forming part 430 will be described in detail in a later process. In this embodiment, ink reservoir chamber 111 inside frame part 110 (inner space) is provided as the region containing supply path forming part 420, ambient air communicating passage forming part 430, link forming part 440, and dispensing passage forming part 450, but ambient air communicating passage forming part 430 is an ambient air passage for introducing ambient air into ink reservoir chamber 111, so it may alternatively be provided as a region other than ink reservoir chamber 111 of frame part 110 (inner space). This means that the space from ink reservoir chamber 111 (inner space) described above excluding ambient air communicating passage forming part 430 is essentially considered the space in which ink is stored.

[0116] Moreover, on the outer edge of frame part 110, thin plate-shaped protruding parts are formed in one location on the bottom part (bottom part of Figure 14(a) and bottom part of Figures 14(b)) and in two locations on the top part (top part of Figure 14(a) and top part of Figure 14(b)), and through-holes 460a to 460c, into which rod members 215a to 215c (see Figure 8) of first case member 210 described above are inserted, are formed on these protruding parts.

[0117] First, inner circumference welded parts 411a to 417a will be described with reference to Figure 14(a). Inner circumference welded parts 411a to 417a consist of inner circumference welded part 411a, which is provided on supply path forming part 420, inner circumference welded part 412a, which is provided on ambient air communicating passage forming part 430, and inner circumference welded parts 413a to 417a, which are provided on link forming part 440. Moreover, the welded surface parts of inner circumference welded parts 411a to 417a are positioned on the same virtual plane as the welded surface part of outer circumference welded part 400a, and film 160 can be welded on the same plane (virtual plane R).

[0118] Inner circumference welded part 411a is provided on supply path forming part 420, and it consists of a downward-sloping vertical wall that slopes in a direction that intersects with longitudinal direction B of frame part 110 (see Figure 8; left/right direction in Figure 14(a)). Inner circumference welded part 412a forms one side wall (vertical wall) of ambient air connection passage 433, which will be described below, in ambient air communicating passage forming part 430, and it consists of a downward-sloping vertical wall that slopes in a direction that intersects with longitudinal direction B of frame part 110 (X-direction). Inner circumference welded part 413a is provided in the vicinity of ambient air intake part 130, and it consists of a downward-sloping vertical wall that slopes in a direction that intersects with longitudinal direction B of frame part 110, and a vertical wall that extends from this vertical wall in a direction that is roughly orthogonal to longitudinal direction B of frame part 110 (vertical direction in Figure 14(a)), which are arranged such that they are roughly T-shaped. Inner circumference welded part 414a is roughly formed into a leftward-facing horseshoe shape, and it consists of a vertical wall that is parallel to longitudinal direction B of frame part 110, a vertical wall that extends from this vertical wall in a direction that is roughly orthogonal to longitudinal direction B of frame part 110, and a downward-sloping vertical wall that slopes from this vertical wall in a direction that intersects with longitudinal direction B of frame part 110. Inner circumference welded part 415a consists of a vertical wall that is parallel to longitudinal direction B of frame part 110, a vertical wall that curves roughly perpendicularly such that it faces the direction of the bottom part of frame part 110 from this vertical wall, and a vertical wall that slopes downward from this vertical wall in a direction that intersects with longitudinal direction B of frame part 110 (Y-direction). Inner circumference welded part 416a is provided in the vicinity of ink dispensing part 150, and it consists of a downward-sloping vertical wall that slopes in a direction that intersects with longitudinal direction B of frame part 110. Inner circumference welded part 417a is provided in the vicinity of ink dispensing part 150, and it consists of a vertical wall that extends in a direction that is roughly orthogonal to longitudinal direction B of frame part 110 and a downward-sloping vertical wall that slopes from this vertical wall in a direction that intersects with longitudinal direction B of frame part 110.

[0119] In other words, at least a portion of the vertical walls of inner circumference welded parts 411a to 417a extends in a direction that slopes downward or is roughly orthogonal to longitudinal direction B of frame part 110 (in other words, the bottom part side of ink reservoir chamber 111 in the position in which ink cartridge 14 is installed), and the end of this bottom part side (bottom part side in Figure 14(a)) is a free end. As a result, even when multiple inner circumference welded parts 411a to 417a are provided on the inside of outer circumference welded part 400a in order to suppress the slackening of

film 160 when film 160 is to be welded to frame part 110, these multiple inner circumference welded parts 41 1a to 417a do not significantly inhibit the flow of ink facing ink supply part 120. Moreover, inner circumference welded parts 411a to 417a are spread around the inside of outer circumference welded part 400a (scattered in multiple units), so they efficiently prevent the generation of slack in film 160 and avoid inhibiting the flow of ink.

[0120] As illustrated in Figure 14(b), regarding inner circumference welded parts 411b to 417b, inner circumference welded part 411b and inner circumference welded parts 413b to 417b are formed with roughly the same shapes as inner circumference welded part 411a and inner circumference welded parts 413a to 417a described above and in positions corresponding to those of inner circumference welded part 411a and inner circumference welded parts 413a to 417a, and only inner circumference welded part 412b is formed with a different shape and in a different position than those of inner circumference welded part 412a. Moreover, the welded surface parts of inner circumference welded parts 411b to 417b are positioned on the same virtual plane as that of the welded surface part of outer circumference welded part 400b, and film 160 can be welded on the same plane (virtual plane S).

[0121] Inner circumference welded part 412b comprises inner circumference welded part 412b1, which consists of a vertical wall that extends from outer circumference welded part 400b in a direction that is roughly orthogonal to longitudinal direction B of frame part 110 (Y-direction), and inner circumference welded part 412b2, which likewise consists of a vertical wall that extends from outer circumference welded part 400b in a direction that is roughly orthogonal to longitudinal direction B [of frame part 110]. Inner circumference welded part 412b1 and inner circumference welded part 412b2 are provided from plate part 438, which demarcates ambient air communicating passage forming part 430. This is because ambient air communicating passage forming part 430 is formed only on the front surface side of frame part 110, and inner circumference welded part 412b1 and inner circumference welded part 412b2 are provided in order to suppress the generation of slack in film 160 in the portion corresponding to the back surface side of this ambient air communicating passage forming part 430. Moreover, as with the front surface side, inner circumference welded parts 411b to 417b become free ends and are spread around on the back surface side of frame part 110 as well (scattered in multiple units), so they efficiently reduce the inhibition of ink flow while suppressing the generation of slack in film 160.

[0122] Because inner circumference welded parts 411a to 417a and 411b to 417b are equipped in a spread-out orientation (scattered in multiple units), in the case in which case 200 is formed from a flexible resin material, it is possible to restrict case deformation with inner circumference welded parts 411a to 417a and 411b to 417b even if the case deforms on the side of ink reservoir element 100. As a result, it is possible to prevent the damage of the case and the damage of film 160. Further, outer circumference welded parts 400a and 400b and inner circumference welded parts 411a to 417a and 411b to 417b are formed with vertical walls that are provided on the front surface side or the back surface side, so extremely complex dies are not required when frame part 110 is to be injection-molded. It is therefore possible to reduce the manufacturing cost of ink cartridge 14.

[0123] Next, supply path forming part 420 will be described with reference to Figure 15. Figure 15 is a diagram that shows supply path forming part 420. Figure 15 (a) is a diagram that shows the outline of supply path forming part 420 (diagram of the back surface side of frame part 110), Figure 15(b) is a diagram that shows a cross-sectional view of supply path forming part 420 through line XVb-XVb in Figure 15(a), Figure 15(c) is a diagram that shows the state in which the amount of remaining ink has decreased, and Figure 15(d) is a diagram that shows the state in which the supply of ink has been completed.

[0124] As illustrated in Figure 15(a), supply path forming part 420 is primarily equipped with first supply communicating hole 421, which communicates with ink supply part 120, supply partition wall 422, which is formed into a roughly triangular frame when viewed from the direction perpendicular to the page in Figure 15(a) such that it encloses this first supply communicating hole 421, plate part 427, which covers the region on the inside of supply partition wall 422 and extends parallel to virtual planes R and S between the planes, second supply communicating hole 423, which is formed as a portion of supply partition wall 422 is cut out, supply concave part 424, which is formed by making a portion of the bottom part of ink reservoir chamber 111 (bottom part of Figure 15 (a); portion of wall part of part 400b1 that forms the bottom part of ink reservoir chamber 111 in outer circumference welded part 400b) into a concave shape (stepped shape), plate part 428, which extends from outer circumference welded part 400b and supply partition wall 422 and extends parallel to virtual planes R and S between the planes, arm sandwiching part 425, which is provided on the free end of plate part 428 and has sensor arm 470 ("displacement member", see Figure 19) that is attached as a rotating member (described below), and inner circumference welded part 411a, which is provided in the direction of detection part 140 (see Figure 14(b)) from this arm sandwiching part 425. Moreover, film 160 is welded to supply partition wall 422, and its welded surface part is positioned on the same virtual plane as the welded surface part of outer circumference welded part 400b (virtual plane S). The space enclosed by supply partition wall 422 and plate part 427 is ink supply chamber 426, which temporarily stores the ink that is supplied to ink supply part 120, and the space formed by supply concave part 424 and plate part 428 is concave part space 424a. As illustrated in Figure 14(b), this concave part space 424a is lower than part 400b1 that forms the bot-

tom part of ink reservoir chamber 111 (inner space) in the height direction (Y-direction) of cartridge 14, and it constitutes the portion of space that is positioned on the bottommost side (lowest side) of ink reservoir chamber 111. As illustrated in Figure 15(a), first supply communicating hole 421 is formed above bottom part 400b1 (same height as the top end of recessed space 424a), and second supply communicating hole 423 is formed below bottom part 400b1. In other words, second supply communicating hole 423 is positioned on the lower side of ink reservoir chamber 111 (bottom part side) that is lower than first supply communicating hole 421. Arm sandwiching part 425 is formed in a roughly leftward-facing C shape when viewed from the direction perpendicular to the page in Figure 15(a), and a portion of the side opposite ink supply part 120 (left side in Figure 15(a)) is opened. As illustrated in Figures 14(a) and 14(b), welded part 411b and welded part 411a described above are provided such that they face the opposite sides as one another from plate part 428.

[0125] As illustrated in Figure 15(b), supply partition wall 422 is formed such that, when film 160 is to be welded, it separates the inside of frame part 110 (ink reservoir chamber 111) and first supply communicating hole 421. In other words, ink supply chamber 426 that is enclosed by supply partition wall 422 communicates with the inside of frame part 110 only through second supply communicating hole 423. As a result, ink that is stored inside frame part 110 is supplied into ink supply chamber 426 from second supply communicating passage 423, and it is then supplied to ink supply part 120 from first supply communicating hole 421 (path illustrated by arrow D in Figure 15(c) (ink flow path)).

[0126] Next, ink flow path D, through which ink inside frame part 110 is supplied to ink supply part 120, will be described with reference to Figures 15(c) and 15(d). As illustrated in Figure 15(c), when liquid surface I of ink that is stored inside frame 110 is higher than supply concave part 424, the ink is supplied to ink supply part 120 through the ink flow path indicated by arrow D in Figure 15(c). In this case, recessed space 424a is filled with ink, so the inside of ink supply chamber 426 that is enclosed by supply partition wall 422 is also filled with ink. In other words, in the state illustrated in Figure 15(c), ink fills the inside of ink supply chamber 426, so even if liquid surface I of the ink drops below first supply communicating hole 421, the ink can be supplied to ink supply part 120 through second supply communicating hole 423. In this embodiment, ink supply part 120 is roughly cylindrically shaped, as illustrated in Figure 8, and, as described below, a portion of ink supply mechanism 500 and check valve 670 are housed inside ink supply element 116, while shaft part 672 of check valve 670 (see Figure 29) is inserted into first supply communicating hole 421. Therefore, taking into consideration the space occupied by ink supply mechanism 500 and check valve 670, there is a limit to the formation of first supply communicating hole 421 on the bottom side of ink reservoir chamber 111 (frame part 110). In a configuration in which supply partition wall 422 is not provided, when liquid surface I of the ink drops below first supply communicating hole 421, it becomes impossible to supply the ink, and the full use of the ink inside ink reservoir chamber 111 becomes poor. However, by supplementing supply partition wall 422 and forming second supply communicating hole 433 on the bottom part side lower than first supply communicating hole 431, it is possible to supply ink until liquid surface I of the ink falls below second supply communicating hole 433, so it is possible to facilitate the full use of the ink.

[0127] When ink is further supplied from the state illustrated in Figure 15(c) and liquid surface I of the ink drops below the upper end of supply concave part 424 and becomes lower than second supply communicating hole 423, ambient air flows into ink supply chamber 426 enclosed by supply partition wall 422 through second supply communicating hole 423, and as a result, additional ink can no longer he supplied (state illustrated in Figure 15(d)).

[0128] As illustrated in Figure 15(d), a difference of distance t1 is provided between part 400b1 that forms the bottom part of ink reservoir chamber 111 in outer circumference welded part 400b and the lower end of second supply communicating hole 423. Here, if second supply communicating hole 423 is above part 400b1 that forms the bottom part of ink reservoir chamber 111, additional ink cannot be supplied after liquid surface I of the ink reaches second supply communicating hole 423, so the full use of the ink becomes poor. Therefore, supply concave part 424 is provided, and it is configured such that second communicating hole 423 is positioned lower than part 400b1 that forms the bottom part of ink reservoir chamber 111 by distance t1. As a result, as illustrated in Figure 15(d), in the state in which the supply of ink has been completed, only a slight amount of ink remains in the vicinity of the bottom part of supply concave part 424 (part below second supply communicating hole 423), and the amount of ink that cannot be supplied can be markedly reduced. Moreover, supply concave part 424 is formed on the bottommost part of ink reservoir chamber 111 (see Figure 14), so the ink inside reservoir chamber 111 flows into supply concave part 424 and accumulates in supply concave part 424 when the amount of ink becomes small. Therefore, by establishing supply concave part 424, it is possible to facilitate the full use of the ink inside ink reservoir chamber 111.

[0129] Debris E remains inside the ink remaining inside supply concave part 424. This is because the difference of distance t2 is provided between second supply communicating hole 423 and the bottom part side wall of supply concave part 424 (side wall on the lower side in Figure 15(d)). As described above, when liquid surface I of the ink drops below second supply communicating hole 423, additional ink cannot be supplied, so the ink that is between second supply communicating hole 423 and supply concave part 424 remains inside supply concave part 424 without being supplied to ink supply part 120. Dust

or plastic debris that is left over inside frame part 110 when ink cartridge 14 is manufactured sometimes remains inside the ink, but the specific gravity of this dust or plastic debris is greater than that of the ink, so it remains in the vicinity of the bottom part of frame part 110. Therefore, as illustrated in Figure 15(d), debris E remains inside the ink remaining inside supply concave part 424. When debris E is supplied to ink supply part 120 and supplied to multifunction device 1 (see Figure 1), there is a possibility that ink clogging will occur, making accurate printing impossible. However, as described above, because distance t2 is provided between second supply communicating hole 423 and the bottom part side wall of supply concave part 424, debris E remains inside supply concave part 424, so the occurrence of ink clogging can be reduced.

[0130] Next, ambient air communicating passage forming part 430 will be described with reference to Figure 16. Figure 16 is a diagram that shows ambient air communicating passage forming part 430. Figure 16(a) is an oblique view that shows the outline of ambient air communicating passage forming part 430, Figure 16(b) is a diagram that shows ambient air communicating passage forming part 430 from the perspective of arrow XVIb in Figure 16(a), and Figure 16(c) is a diagram that shows ambient air communicating passage forming part 430 from the perspective of arrow XVIc in Figure 16(a).

[0131] As illustrated in Figure 16(a), ambient air communicating passage forming part 430 is primarily equipped with first ambient air communicating chamber 431, which is formed into a roughly rectangular parallelepiped that communicates with ambient air intake part 130, second ambient air communicating chamber 432, which is formed into a roughly rectangular parallelepiped that communicates with ink reservoir chamber 111, and ambient air connection passage 433, which communicates with first ambient air communicating chamber 431 and second ambient air communicating chamber 432 on the side of first surface 437a on which film 160 is welded (left front side of Figure 16; first surface 437a is a surface that is contained in virtual plane R). The chambers and passage of first ambient air communicating chamber 431 and second ambient air communicating chamber 432 and ambient air connection passage 433 are formed as film 160 is welded on the front side of Figure 16(a).

[0132] First ambient air communicating hole 434, which communicates with ambient air intake part 130, is formed on the side of second surface 437b that opposes first surface 437a of first ambient air communicating chamber 431 (second surface 437b is the surface of plate part 438 described above). In second ambient air communicating chamber 432, second ambient air communicating hole 435, which communicates with first chamber 111a of ink reservoir chamber 111, is formed on the side of first surface 437a, and third ambient air communicating hole 436, which communicates with second chamber 111b of ink reservoir chamber 111, is formed on second surface 437b (plate part 438). First ambient air communicating hole 434 is formed on side wall surface 431a of first ambient air communicating chamber 431 on the side of ambient air intake part 130 (left back side in Figure 16), and communicating opening 433b is formed on side wall surface 432a of second ambient air communicating chamber 432 on the side of first ambient air communicating chamber 431 (left back side in Figure 16). As described above, one of the side walls of ambient air connection passage 433 (side wall on the lower side in Figure 16(a)) is inner circumference welded part 412a.

[0133] In ambient air connection passage 433, communicating openings 433a and 433b, which communicate with first ambient air communicating chamber 431 and second ambient air communicating chamber 432, respectively, are formed on the side of first surface 437a, and these communicating openings 433a and 433b have opening areas that are substantially smaller than the side wall areas of first ambient air communicating chamber 431 and second ambient air communicating chamber 432 (side wall surfaces 431a and 432a on which communicating openings 433a and 433b are formed). Because a part having a passage that introduces ambient air with extremely small cross-sectional area (ambient air connection passage 433) is provided (so-called labyrinth), the resistance of the flow path when ambient air passes through becomes large. As a result, it is possible to reduce the evaporation of more ink than necessary through ambient air connection passage 433.

[0134] As is clear from Figure 14(a), ambient air connection passage 433 slopes downward in the direction of second ambient air communicating chamber 432 from first ambient air communicating chamber 431. Because ambient air connection passage 433 slopes downward, the device is in the position in which ink cartridge 14 is installed in refill unit 13 of multifunction device 1, ink that has penetrated into ambient air connection passage 433 can be naturally returned to ink reservoir chamber 111 due to gravity. Moreover, because the cross-sectional area of ambient air connection passage 433 is made small, the penetration of ink stored inside ink reservoir chamber 111 into ambient air connection passage 433 can be reduced. Here, when ink penetrates into ambient air connection passage 433, a meniscus is formed, and it is sometimes impossible to introduce ambient air normally as a result. As described above, because ambient air connection passage 433 slopes downward, even if ink penetrates into the passage, the ink is returned to ink reservoir chamber 111, so the formation of meniscuses can be substantially prevented. Further, ambient air connection passage 433 is formed as a result of the welding of film 160, so at least one of the surfaces is a side wall that can be deformed by bending. In other words, ambient air connection passage 433 is configured such that its cross-sectional area changes easily. Therefore, even if a meniscus forms, the meniscus can be easily broken due to the bending and deformation of this film 160, so ambient air can be introduced normally. A portion of the surface of second ambient air communicating hole 435

is also formed by film 160, so the formation of a meniscus on second ambient air communicating hole 435 can be substantially prevented.

[0135] Third ambient air communicating hole 436 is formed on the uppermost part of second ambient air communicating chamber 432 in the position in which ink cartridge 14 is installed in multifunction device 1 (see Figure 1) (state illustrated in Figure 16(a)). Therefore, even in cases in which an amount of ink is stored such that a meniscus is formed on second ambient air communicating hole 435 and second ambient air communicating hole 435 is blocked, ambient air can be reliably introduced into ink reservoir chamber 111 through third ambient air communicating hole 436.

[0136] Next, the mechanism that prevents the leakage of ink from ambient air communicating passage forming part 430 will be described with reference to Figures 16 (b) and 16(c). As described above, case 200 of ink cartridge 14 is formed into a cubic shape containing a pair of largest surfaces that oppose one another, so when this is loaded onto a flat bed, the device may assume one of two loading positions in which one of largest surfaces 210a and 220a forms the lower surface (bottom surface). At this time, ambient air intake part 130 is positioned on the side surface of case 200, but, as described below, it is difficult for ink to leak from ambient air communicating passage forming part 430 in either of the positions.

[0137] Figures 16(b) and 16(c) show the positions of ambient air communicating passage forming part 430 corresponding to each of the two loading positions. Figure 16(b) shows the case in which ink cartridge 14 is placed such that ambient air connection passage 433 is positioned on the lower side (the side of first chamber 111a of frame part 110 is the lower side and first surface 437a is the lower side), and Figure 16(c) shows the case in which ink cartridge 14 is placed such that ambient air connection passage 433 is positioned on the upper side (the side of second chamber 111b of frame part 110 is the lower side and second surface 437b is the lower side).

[0138] As illustrated in Figure 16(b), when ink cartridge 14 is placed such that ambient air connection passage 433 is positioned on the lower side during the transportation of ink cartridge 14, the ink stored inside ink reservoir chamber 111 passes through second ambient air communicating chamber 432 and ambient air communicating chamber 433 and penetrates into first ambient air communicating chamber 431. Moreover, as described above, ambient air connection passage 433 communicates through communicating opening 433b, which has markedly smaller area than the side surface of second ambient air communicating chamber 432, so there are cases in which the ink inside ink reservoir chamber 111 does not necessarily pass through ambient air communicating chamber 433 and penetrate into first ambient air communicating chamber 431. In the state illustrated in Figure 16(b), liquid surface I of the ink has not reached the position of the opening of first ambient air communicating hole 434, so even if ink cartridge 14 is placed such that ambient air connection passage 433 is positioned on the lower side, the efflux of ink from ambient air intake part 130 to the outside can be prevented.

[0139] As illustrated in Figure 16(c), when ink cartridge 14 is placed such that ambient air connection passage 433 is positioned on the upper side during the feeding of ink cartridge 14, the ink stored inside ink reservoir chamber 111 flows into second ambient air communicating chamber 432, but liquid surface I of the ink does not reach the opening position of communicating opening 433b of ambient air connection passage 433. As a result, the ink does not flow into ambient air connection passage 433 from communicating opening 433b, so the ink does not flow into first ambient air communicating chamber 431. Therefore, even if ink cartridge 14 is placed such that ambient air connection passage 433 is positioned on the upper side, the efflux of ink from ambient air intake part 130 to the outside can be prevented.

[0140] As described above, by configuring first ambient air communicating chamber 431, second ambient air communicating chamber 432, and ambient air connection passage 433 as described above and establishing the opening position of first ambient air communicating hole 434 and the opening position of communicating opening 433b in positions that are symmetrical to ambient air connection passage 433, it is possible to prevent the leakage of ink from ambient air intake part 130. Further, by making the cross-sectional area of ambient air connection part 433 small, it is possible to reduce the evaporation of ink and to prevent the flow of ink into first ambient air communicating chamber 431.

[0141] Here, link forming part 440 will be explained by returning to Figure 14. Link forming part 440 connects the vicinity of ambient air intake part 130 and ink dispensing part 150 inside ink reservoir chamber 111, and it is formed in roughly the center position in ink reservoir chamber 111. Therefore, link forming part 440 connects two locations that oppose frame part 110, so it is also a reinforcement member that maintains the strength of frame part 110. Link forming part 440 is also a divider plate that divides the chamber such that the side of first opening 112a and the side of second opening 112b are in roughly the same region of space (divider plate that divides first chamber 111a and second chamber 111b of ink reservoir chamber 111 in the state in which they communicate with one another).

[0142] Link forming part 440 consists of ambient air side linking part 441, which is provided on the side of ambient air intake part 130 (left side in Figure 14(a) or right side in Figure 14(b)) using inner circumference welded parts 415a and 415b as boundaries, and dispensing side linking part 442, which is provided on the side of ink dispensing part 150 (right side in Figure 14(a) or left side in Figure 14(b)). On ambient air side linking part 441, inner circumference welded parts 413a, 413b, 414a, and 414b are respectively provided on the sides of first and second openings 112a and 112b (front side and back

side when viewed in the direction perpendicular to the page in Figure 14(a) and the front side and the back side when viewed in the direction perpendicular to the page in Figure 14(b); here, the direction perpendicular to the page is parallel to the Z-direction) from this ambient air side linking part 441. Further, the upper end of the height direction (Y-direction) of ambient air side linking part 441 communicates with inner circumference welded part 412a of ambient air communicating passage forming part 430. Moreover, on dispensing side connecting part 442, inner circumference welded parts 416a, 416b, 417a, and 417b are respectively provided on the sides of first and second openings 112a and 112b (front side and back side when viewed in the direction perpendicular to the page in Figure 14(a) and the front side and the back side when viewed in the direction perpendicular to the page in Figure 14(b); here, the direction perpendicular to the page is parallel to the Z-direction) from this dispensing side linking part 442.

[0143] First linking communicating hole 443, which communicates between first chamber 111a and second chamber 111b, is formed on ambient air side linking part 441, and second through fourth linking communicating holes 444-446, which connect first chamber 111a and second chamber 111b, are formed on dispensing side linking part 442. Here, if linking communicating holes 443-446 are not formed on linking forming part 440, first chamber 111a and second chamber 111b do not communicate in the center region of ink reservoir chamber 111, so slight differences sometimes arise in the amounts of ink in first chamber 111a and second chamber 111b. If there are differences in the amounts of ink in first chamber 111a and second chamber 111b, differences arise in the air pressure inside ink reservoir chamber 111, so the adverse effect that ink cannot be smoothly (or accurately) supplied arises. However, by forming linking communicating holes 443-446 such they are spread across link forming part 440, it is possible to make the amounts of ink in first chamber 111a and second chamber 111b equivalent and to supply ink smoothly (or accurately).

[0144] The part enclosed by ambient air side linking part 441, dispensing side linking part 442, and ambient air communicating passage forming part 430 is first reservoir chamber internal opening 113, which communicates between first chamber 111a and second chamber 111b, and the part enclosed by ambient air side linking part 441, dispensing side linking part 442, and supply path forming part 420 is second reservoir internal opening 114, which communicates between first chamber 111a and second chamber 111b. In other words, the part that introduces ambient air into ink reservoir chamber 111 and the part that supplies ink stored inside ink reservoir chamber 111 to the outside communicate in the absence of link forming part 440 and without the division of first chamber 111a and second chamber 111b. As a result, the introduction of ambient air and the supply of ink can be performed in a stable space.

[0145] Linking rib 418a, which connects multiple inner circumference welded parts 412a-417a provided on the side of first opening 112a from link forming part 440, and linking rib 418b, which connects inner circumference welded part 412b to 417b provided on the side of second opening 112b from link forming part 440, are formed on link forming part 440. These linking ribs 418a and 418b are not illustrated in the figure, but they are formed into thin-walled shapes with vertical walls that are lower than inner circumference welded parts 412a-417a and inner circumference welded parts 412b to 417b. Further, most of these linking ribs 418a and 418b are formed on the edge of link forming part 440. As a result, linking ribs 418a and 418b connect inner circumference welded parts 412a to 417a and 412b to 417b, and they are formed on the edge of link forming part 440, so they can maintain the strength of link forming part 440. Moreover, linking ribs 418a and 418b are formed into thin-walled shapes, and they are formed with vertical walls that are lower than inner circumference welded parts 412a-417a and 412b-417b, so it becomes difficult to inhibit the flow of ink.

[0146] Next, dispensing passage forming part 450 will be explained with reference to Figure 17. Figure 17 is a diagram that shows dispensing passage forming part 450. Figure 17(a) is a diagram that shows the outline of dispensing passage forming part 450, and Figure 17(b) is a cross-sectional view of dispensing passage forming part 450 through line XVIIb-XVIIb in Figure 17(a). In dispensing passage forming part 450, in the position in which ink is dispensed, it is in the highest part inside ink reservoir chamber 111, and the dispensed ink flows downward in the direction of ink supply part 120 and ambient air intake part 130.

[0147] As illustrated in the figure, dispensing passage forming part 450 is primarily equipped with dispensing cylinder part 451, which is formed into a roughly cylindrical shape into which ink dispensing plug 520 (see Figure 21), which will be described below, is pressed, first dispensing communicating hole 452, which communicates between this dispensing cylinder part 451 and the inside of ink reservoir chamber 111, roughly U-shaped dispensing partition wall 453, which is provided from the outer surface of dispensing cylinder part 451, wherein the provided edge forms the forms the welded surface part on which film 160 is welded, and partitions first dispensing communicating hole 452 with respect to ink reservoir chamber 111, and second dispensing communicating hole 454, which forms the opening part of dispensing partition wall 453. The opened part of dispensing cylinder part 451 is opening 451a, which is formed on the outside end surface of frame part 110, and the surface that opposes this opening 451 a is bottom part 451 b of dispensing cylinder part 451. The region demarcated by dispensing partition wall 453 and film 160 is dispensing partition wall flow path 453a.

[0148] Dispensing partition wall 453 forms the inner circumference welded part to which film 160 is welded, and dispensing partition wall flow path 453a and second dispensing communicating hole 454 are formed in the

state in which film 160 is welded. As with the welded end part of the other inner circumference welded parts 411b to 417b, the welded end part of dispensing partition wall 453 is positioned on the same virtual plane as the welded end part of outer circumference welded part 400b.

[0149] A detailed description will be given below, but when ink is dispensed into ink reservoir chamber 111, ink is dispensed in a state in which second dispensing communicating hole 454 is positioned on top and first dispensing communicating hole 452 is positioned on bottom (position in which the Y-direction is the horizontal direction in Figure 17(a)). Moreover, ink sequentially passes through dispensing cylinder part 451, first dispensing communicating hole 452, dispensing partition wall flow path 453a and second dispensing communicating hole 454 and the ink is dispensed until liquid surface I of the ink reaches the state illustrated in Figure 17(a). Dispensing partition wall 453 is formed roughly linearly from first dispensing communicating hole 452 to second dispensing communicating hole 454. As a result, ink is dispensed smoothly without resistance.

[0150] When ink is dispensed such that the inside of ink reservoir chamber 111 becomes full, the volume of ink expands and film 160 is damaged or deformed by the boundary where ink cartridge 14 is placed. If film 160 is damaged, the ink leaks, and if film 160 deforms, the volume inside ink reservoir chamber 111 changes, making it impossible to stably supply ink. Therefore, in order to prevent the damage and deformation of film 160, ink is not dispensed to the degree that the inside of ink reservoir chamber 111 becomes full.

[0151] In this embodiment, the air pressure inside ink reservoir chamber 111 after ink is dispensed is lower than the ambient pressure. Therefore, a subsequent decompression process in which the pressure is reduced by aspirating the ambient air inside ink reservoir chamber 111 from dispensing passage forming part 450 is sometimes performed. This is performed in order to reduce the amount of ambient air inside ink reservoir chamber 111 to maintain the degree of deaeration of the ink and to reduce the generation of air bubbles inside the ink. The deaeration of the ink is for the purpose of maintaining the viscosity of the ink at a roughly constant level, and this is because, regarding the generation of air bubbles inside the ink, when air bubbles are supplied to multifunction device 1 (see Figure 1), the pressure required to discharge the ink is not transmitted to the discharge opening (not illustrated in the figure), so the ink cannot be correctly discharged.

[0152] In the case in which a subsequent decompression process is performed, when the ambient air inside ink reservoir chamber 111 is aspirated from dispensing passage forming part 450, the resulting amount of ink is not correct, regardless of whether or not an appropriate amount of ink was dispensed. If the amount of ink is reduced, this causes losses to the user of ink cartridge 14, which is not preferable. Therefore, when first dispensing communicating hole 452 is enclosed by roughly U-shaped dispensing partition wall 453 and second dispensing communicating hole 454 is placed above (upper side in Figure 17(a)) liquid surface 1 of the ink (or first dispensing communicating hole 452), there is an amount of distance between liquid surface I of the ink and second dispensing communicating hole 454, even if the inside of ink reservoir chamber 111 is decompressed, so it is possible to substantially prevent the escape of the ink inside ink reservoir chamber 111 to the outside through dispensing passage forming part 450.

[0153] Here, the structure in the vicinity of detection part 140 will be described with reference to Figure 18. Figure 18 is a diagram that shows the vicinity of detection part 140. Figure 18(a) is a diagram that shows the outline of the vicinity of detection part 140, Figure 18(b) is a cross-sectional view of detection part 140 through line XVIIIb-XVIIIb in Figure 18(a), and Figure 18(c) is a cross-sectional diagram of the vicinity of detection part 140 through line XVIIIc-XVIIIc in Figure 18(a).

[0154] As illustrated in Figure 18(a), detection part 140 projects outward from frame part 110 (right side in Figure 18(a)). Detection part 140 is equipped with enclosure part 141, which encloses the end of sensor arm 470 (see Figure 19) (shielding arm part 473c) by sandwiching it with a pair of wall surfaces and forms a passage through which sensor arm 470 can be displaced. Enclosure part 141 is formed into a roughly box-shaped passage by a bottom surface, which is formed by bottom wall 141a inside enclosure part 141 (lower side in Figure 18(a)), a pair of side surfaces, which are formed by both side walls 141b that are provided on both sides from bottom wall 141 a, an inner side surface, which is formed by inner side wall 141c that is provided from bottom wall 141a and connects to both side walls 141b, and a ceiling surface, which is formed ceiling wall 141d that connects to both side walls 141b and the top edge of inner side wall 141c and is positioned opposite bottom wall 141a. Detection part 140 is also equipped with arm supporting part 142, which is provided such that it projects upward from the bottom surface formed by bottom wall 141a and supports sensor arm 470 from below, and vertical wall 143, which is provided from the inside wall of frame part 110 (outer circumference welded part 400b) such that it connects to arm supporting part 142 and extends in the direction of supply path forming part 420, is provided in the vicinity of detection part 140. As is clear from Figure 18(b), arm supporting part 142 is formed in the center of the width direction of the passage inside detection part 140, and it is arranged such that the end of sensor arm 470 (shielding arm part 473c) is also positioned in the center of the passage inside detection part 140. The details will be described below, but sensor arm 470 rotates according to the amount of ink inside ink reservoir chamber 111, and it is a member that is used to detect that ink cartridge 14 has been installed in accommodating chamber 50 of refill unit 13 of multifunction device 1 (see Figure 4) and that the amount of remaining ink has become low by detecting the position of shielding arm part 473c with re-

maining ink detection sensor 57 (see Figure 5) provided on multifunction device 1. As described above, detection part 140 is translucent, and light from light emitting part 57a can be transmitted to light receiving part 57b. Therefore, when sensor arm 470 (shielding arm part 473c) is positioned in the light path between light emitting part 57a and light receiving part 57b, it blocks the light to be received by light receiving part 57b, so it has light-blocking properties. As a result, by rotating in accordance with the amount of ink inside ink reservoir chamber 111 (reservoir space), sensor arm 470 can change the amount of light received by light receiving part 57b and detect the presence or absence of remaining ink. In Figure 18 (b), the positions of light emitting part 57a and light receiving part 57b of remaining ink detection sensor 57 when ink cartridge 14 is housed inside accommodating chamber 50 of multifunction device 1 are illustrated, but, as illustrated in the figure, light emitting part 57a and light receiving part 57b are positioned in the vicinity of detection part 140.

[0155] As illustrated in Figure 18(b), the thickness of arm supporting part 142 is formed such that second gap t4 between the inside walls of enclosure part 141 (pair of wall surfaces; inside surfaces of both side walls 141 b) and the outside wall of arm supporting part 142 is narrower than first gap t3 between the inside walls of enclosure 141 (pair of wall surfaces; inside surfaces of both side walls 141b) and the outside of sensor arm 470. Here, the ink stored inside detection part 140 is reduced, and when liquid surface I of the ink drops in step with this reduction of ink and liquid surface I of the ink falls below detection part 140, the ink inside detection part 140 is depleted, but because first gap t3 between sensor arm 470 and enclosure 141 is minute, ink remains inside detection part 140 due to the surface tension of the ink, and sensor arm 470 sometimes does not rotate normally due to this surface tension of the ink. Incidentally, the reason that first gap t3 is provided with minute spacing is that, when this spacing is made wide, the spacing between light emitting part 57a and light receiving part 57b also widens, and the detection sensitivity of remaining ink detection sensor 57 thus deteriorates. Therefore, by forming arm supporting part 142 such that first gap t3 > second gap t4, it is ensured that the ink surface tension that is generated between arm supporting part 142 and enclosure part 141 is greater than the ink surface tension that is generated between sensor arm 470 and enclosure part 141. As a result, the ink that remains inside enclosure part 141 is drawn between arm supporting part 142 and enclosure part 141, so it is possible to substantially prevent ink from remaining between sensor arm 470 and enclosure part 141 and to suppress the inhibition of the behavior of sensor arm 470. Sensor arm 470 therefore behaves normally, so the amount of remaining ink can be accurately detected.

[0156] As illustrated in Figure 18(a), bottom wall 141a on the lower part of enclosure part 141 (lower side in Figure 18(a)) slopes downward in the direction of ink reservoir chamber 111, so the bottom surface formed by bottom wall 141a inside enclosure 141 also slopes downward. Therefore, ink that is drawn between enclosure part 141 and arm supporting part 142 flows downward in the direction of ink reservoir chamber 111 (or supply path forming part 420). Further, as illustrated in the cross-sectional view in Figure 18(b), the junction part (edge) of bottom wall 141a of enclosure 141 and arm supporting part 142 is formed angularly from a cross-sectional perspective (roughly a right angle), so the capillary force of this junction part of enclosure part 141 and arm supporting part 142 becomes strong, and this forms a shape that is conducive to guiding ink to the side of ink reservoir chamber 111 (or supply path forming part 420). In other words, the junction part of enclosure part 141 and arm supporting part 142 forms a fluid guiding path (guide) for guiding the ink. As a result, it is possible to efficiently make the ink remaining inside enclosure part 141 flow downward.

[0157] As illustrated in Figure 18(a), vertical wall 143 that connects to arm supporting part 141 is formed on sloping surface 143a, which slopes downward in the direction of supply path forming part 420 from arm supporting part 141. Sloping surface 143a constitutes a portion of the inside wall of frame part 110 (outer circumference welded part 400b). Further, as illustrated in the cross-sectional view in Figure 18(c), the junction part of vertical wall 143 and the inside wall of frame part 110 is formed angularly from a cross-sectional perspective (roughly a right angle), and it is formed such that its thickness is roughly equivalent to that of arm supporting part 141. Therefore, vertical wall 143 slopes downward in the direction of supply path forming part 420, and the junction part with the inside wall of frame part 110 is formed into a roughly right angle, .so ink can be efficiently guided in the direction of supply path forming part 420 by this slope and the capillary force. In other words, the junction part of vertical wall 143 and the inside wall of frame part 110 forms a fluid guiding path (guide) for guiding the ink. Because the thicknesses of arm supporting part 142 and vertical wall 143 are formed such that they are roughly equivalent, vertical wall 143 is formed in continuation from arm supporting part 142. As a result, there is no resistance against the guiding of ink to supply path forming part 420, and ink can therefore by efficiently guided.

[0158] In the case in which sensor arm 470 is rotated upward, sensor arm 470 makes contact with the ceiling surface formed by ceiling wall 141b, which opposes bottom wall 141a of detection part 140, and the rotation of sensor arm 470 is thus restricted. It is therefore possible to prevent sensor arm 470 from jumping out of enclosure part 140, and the behavior of sensor arm 470 becomes accurate, so it is possible to accurately detect the amount of remaining ink.

[0159] Here, sensor arm 470 will be described with reference to Figure 19. Figure 19 is a diagram that shows sensor arm 470. Figure 19(a) is a diagram that shows the front side of sensor arm 470, and Figure 19(b) is a

diagram that shows sensor arm 470 from the perspective of arrow XiXb in Figure 19(a). Sensor arm 470 is a member for detecting the amount of remaining ink inside ink reservoir chamber 111. Sensor arm 470 is manufactured by injection molding using a resin material (polypropylene, for example), and it has light-blocking properties because it is formed to be opaque.

[0160] Sensor arm 470 is a rotating member that rotates according to the amount of remaining ink inside ink reservoir chamber 111, and a portion is detected by remaining ink detection sensor 57 (see Figure 5), which detects the amount of remaining ink stored inside ink reservoir chamber 111. Sensor arm 470 is primarily equipped with balance part 471, which is formed from a material with a lower specific gravity than that of the ink, attachment part 472, which is attached to frame part 110 such that it can oscillate, and arm part 473, which extends from this attachment part 472 in a direction that is roughly orthogonal to balance part 471 (upward in Figure 19(a)), further extends sloping upward, and blocks the range of possible detection of remaining ink detection sensor 57. Attachment part 472 is a linking part that connects balance part 471 and arm part 473.

[0161] Roughly cylindrical attachment shaft 472a, which is attached to arm sandwiching part 425 (see Figure 14) of frame part 110, is formed on attachment part 472. This attachment shaft 472a is formed with a diameter that is smaller than the inside diameter of arm sandwiching part 425 and is larger than the length of the opening of arm sandwiching part 425. As a result, when sensor arm 470 is rotated, it can be operated with little resistance, and the deviation of sensor arm 470 from arm sandwiching part 425 can be prevented.

[0162] Arm part 473 consists of vertical arm part 473a, which extends in a direction that is roughly perpendicular to balance part 471 (upward in Figure 19(a)), sloping arm part 473b, which slopes upward from this vertical arm part 473a, and shielding arm part 473c, which is used as a light-blocking part that blocks the range of possible detection of remaining ink detection sensor 57.

[0163] As illustrated in Figure 19(b), arm part 473 is formed such that it is substantially thinner than balance part 471 and attachment part 472. This is because, when arm part 473 is formed with a thick profile, the scale of detection part 140 is increased, and as a result, ink cartridge 14 becomes large and the resistance when sensor arm 470 rotates increases, which sometimes makes it impossible to detect the accurate amount of remaining ink. Further, as described above, when the thickness of detection part 140 increases, the range of detection of remaining ink detection sensor 57 widens accordingly and the detection sensitivity deteriorates, so an expensive, high-performance remaining ink detection sensor with favorable detection properties becomes necessary. Therefore, arm part 473 is formed with a thin profile in order to prevent increases in the scale of ink cartridge 14 and to detect the accurate amount of remaining ink. Ribs 473d are formed on vertical arm part 473a and sloping arm part 473b, and the strength is maintained by these ribs.

[0164] Roughly semispherical arm protruding parts 473e1 and 473e2 are formed on shielding arm part 473c in two locations on the top and bottom of the part housed inside detection part 140 (upper side end and lower side end in Figure 19(a)), and these arm protruding parts 473e1 and 473e2 reduce the likelihood of shielding arm part 473c adhering to the inside wall of detection part 140 due to the surface tension of the ink and becoming unable to rotate. In other words, because arm protruding parts 473e1 and 473e2 are formed into semispherical shapes, the only part that makes contact with the inside wall of detection part 140 is the end of arm protruding parts 473e1 and 473e2, so the effects of the surface tension of the ink are reduced.

[0165] Balance part 471 is made of a resin material with a specific gravity that is lower than that of the ink, so when liquid surface I of the ink drops in step with decreases in the amount of remaining ink, balance part 471 moves in the direction of the bottom part of frame part 110 (direction of the bottom part of ink reservoir chamber 111; downward in Figures 14(a) and 14(b)) in step with this drop in the liquid surface I of the ink. When balance part 471 moves in the direction of the bottom part, and arm part 473 moves in the direction of the top part using attachment part 472 as a rotational axis, shielding arm part 473c deviates from the range of possible detection of remaining ink detection sensor 57 and thereby the state in which ink is depleted can be detected.

[0166] With a conventional balance part, the inside of the balance part was hollowed in order to make the balance part float on liquid surface I of the ink, but with this configuration, the working (or molding) of the balance part becomes difficult. In contrast to this, in this embodiment, the materials of sensor arm 470 consist of materials with specific gravities that are less than that of the ink, so a working process is not required, and it is not necessary to manufacture complex dies, so the manufacturing cost of sensor arm 470 can be reduced.

[0167] Next, the positional relationships and shapes of ink supply part 120, ambient air intake part 130, and detection part 140 will be described with reference to Figure 20. Figure 20 is a diagram that shows a portion of ink reservoir element 100. Figure 20(a) is a diagram that shows the side surface of ink reservoir element 100, Figure 20(b) is a diagram that shows a partial front view of ink reservoir element 100, and Figure 20(c) is a cross-sectional view through line XXc-XXc in Figure 20(a).

[0168] As illustrated in Figures 20(a) and 20(b), ink supply part 120, ambient air intake part 130, and detection part 140 are provided on one of the side surfaces of frame part 110 (one end surface; the side surface in the front direction of installation when ink cartridge 14 is installed). As described above, the position illustrated in Figures 20(a) and 20(b) is the position in which ink cartridge 14 is installed inside accommodating chamber 50 of refill unit 13 (see Figure 1). Therefore, in the state in

which ink cartridge 14 is installed inside refill unit 13, ambient air intake part 130, detection part 140, and ink supply part 120 are sequentially aligned from top (top of Figure 20(a)) to bottom (bottom of Figure 20(a)). In other words, the elements are aligned in the height direction (Y-direction) of ink cartridge 14.

[0169] As illustrated in Figure 20(a), width t5 of detection part 140 is formed such that it is shorter than diameter t6 of the opening of ink supply part 120 (opening 600a of supply cap 600 described below (see Figure 34)). Further, as illustrated in Figure 20(b), detection part 140 is formed such that it is concave in the direction of frame part 110 (in a position withdrawn to the side of ink reservoir chamber 111) with respect to ink supply part 120 and ambient air intake part 130.

[0170] As described above, arm part 473 of sensor arm 470 is positioned on the inside of detection part 140. As will be described below, the light path of remaining ink detection sensor 57 (see Figure 5) is opened from the light-blocking state due to the rotation of arm part 473, and the amount of remaining ink can be detected as a result. On remaining ink detection sensor 57, light receiving part 57b and light emitting part 57a are positioned on both sides of detection part 140 (both left and right sides in Figure 20(a)), so both side surfaces of detection part 140 (surfaces on the left and right sides in Figure 20(a); front and back side surfaces in Figure 20(b)) form detection surfaces 140a and 140b. As is clear from Figure 20 (a), these detection surfaces 140a and 140b are parallel to the height direction (Y-direction) of ink cartridge 14 when in the position in which ink cartridge 14 is installed in refill unit 13 - in other words, the surfaces are vertical. When ink adheres to the front surfaces of these detection surfaces 140a and 140b, it is sometimes impossible to detect the accurate amount of remaining ink.

[0171] For example, at the time of the transportation of multifunction device 1, it is not necessarily transported such that Multifunction device I is horizontal. Therefore, ink supply part 120 is sometimes positioned on top, but ink sometimes leaks out from ink supply part 120 at this time and adheres to detection pat 140. Moreover, when ink cartridge 144 is temporarily removed from refill unit 13, ink that adheres to needle 49 of multifunction device 1 is likely to adhere to the vicinity of the opening of ink supply part 120, but after it is removed, the ink that adheres to the vicinity of the opening of ink supply part 120 sometimes adheres to detection part 140 depending on the position in which the user handles ink cartridge 14. When ink cartridge 14 is once again installed in refill unit 13 in the state in which ink has adhered to detection part 140, because ink detection part 140 (detection surfaces 140a and 140b) and light receiving part 57b and light emitting part 57a of remaining ink detection sensor 57 are in close proximity in the installed state, as described above, there is a risk that the ink that has adhered to detection part 140 will transfer to light receiving part 57b and light emitting part 57a of remaining ink detection sensor 57. In this way, ink that adheres to remaining ink detection sensor 57 blocks light and therefore deteriorates the sensitivity of remaining ink detection sensor 57. This deterioration of sensitivity is even more prominent in black cartridges that use pigmented ink.

[0172] In this embodiment, as illustrated in Figure 20 (b), detection part 140 is provided in a position withdrawn to the side of ink reservoir chamber 111 with respect to ink supply part 120, so it is possible to make it difficult for ink to adhere to detection part 140, even if ink drips from ink supply part 120. In other words, when the user maintains ink cartridge 14 in a position in which ink supply part 120 is higher than detection part 140 and the end surface of ink supply part 120 (end surface on which opening 600a of supply cap 600 is formed) is vertical, ink that has adhered to the vicinity of the opening of ink supply part 120 is most susceptible to the effects of gravity and likely to drop, but because detection part 140 is withdrawn to the side of ink reservoir chamber 111 with respect to ink supply part 120, the ink that drops does not head towards detection part 140, so it does not adhere to detection part 140.

[0173] Because detection surfaces 140a and 140b are vertical when in the position in which ink cartridge 14 is installed in refill unit 13, the ink is most susceptible to the effects of gravity when ink cartridge 14 is installed in refill unit 13 while the ink is adhered to detection surfaces 140a and 140b, so it drops quickly. It is therefore possible to substantially avoid the transfer of ink to light receiving part 57b and light emitting part 57a of remaining ink detection sensor 57. Furthermore, the ink that drops does not adhere to the end surface of ink supply part 120.

[0174] Further, as illustrated in Figure 20(c), side walls that form detection walls 140a and 140b from the side surface of frame part 110 are formed on detection part 140. Therefore, edge part 140c where the side surface of frame part 110 and detection surfaces 140a and 140b intersect is formed at a roughly perpendicular angle. When ink adheres to the vicinity of edge 140c, the capillary force of edge 140c acts upon the ink because edge 140c is formed at a roughly perpendicular angle, and the ink is likely to flow to the side of ink supply part 120 through edge 140c. It is therefore possible to reduce the adherence of ink to detection surfaces 140a and 140b.

[0175] Next, the configuration of the parts of ink reservoir element 100 will be described with reference to Figure 21. Figure 21 is an exploded front view of ink reservoir element 100.

[0176] As illustrated in Figure 21, ink reservoir element 100 is primarily broken down into four elements. The four parts are frame part 110, ink supply mechanism 500, which constitutes ink supply part 120, ambient air intake mechanism 510, which constitutes ambient air intake part 130, and ink dispensing plug 520, which is pressed into dispensing cylinder part 451 of ink dispensing part 150 (see Figure 17). Ink dispensing plug 520 is made of an elastic member such as Pulci rubber, and once it is pressed into dispensing cylinder part 451, it cannot be easily removed, and even if the needle is removed or

inserted, it is configured such that the route of the needle is blocked.

[0177] Ink supply element 116, which is formed in a roughly cylindrical shape into which a portion of ink supply mechanism 500 is inserted, and ambient air intake element 117, which is formed in a roughly cylindrical shape in which a portion of ambient air intake mechanism 510 is inserted, are formed as a unit on frame part 110. Further, protruding parts 116a and 116b (protruding part 116b is not illustrated in the figure), which protrude in the direction of the outer circumference of ink supply element 116 in order to fasten ink supply mechanism 500, are symmetrically arranged on ink supply element 116 centered on the axial center of ink supply element 115 (arranged on the front and back sides in directions perpendicular to the page in Figure 21). Likewise, protruding parts 117a and 117b (protruding part 117b is not illustrated in the figure), which protrude in the direction of the outer circumference of ambient air intake element 117 in order to fasten ambient intake mechanism 510, are symmetrically arranged on ambient air intake element 117 centered on the axial center of ambient air intake element 117 (arranged on the front and back sides in directions perpendicular to the page in Figure 21). Protruding parts 116a, 116b, 117a, and 117b are formed such that the end surface on the side of ink reservoir chamber 111 protrudes in a direction that is perpendicular to the outer circumferential surface of ink supply element 116 or the outer circumferential surface of ambient air intake element 117 (Z-direction), and they slope from this protruding edge part towards the outer circumferential surface of ink supply element 116 or the outer circumference part of ambient air intake element 117. In other words, when ink supply mechanism 500 and ambient air intake mechanism 510 are attached to ink supply element 116 and ambient air intake element 117, the easy desorption of ink supply mechanism 500 and ambient air intake mechanism 510 can be prevented.

[0178] Next, the components of ink supply mechanism 500 and ambient air intake mechanism 510 will be described with reference to Figures 22 through 33. Figure 22 is an exploded view of ink supply mechanism 500 and ambient air intake mechanism 510. Figure 22(a) is an exploded view of ink supply mechanism 500, and Figure 22(b) is an exploded view of ambient air intake mechanism 510.

[0179] As illustrated in Figure 22(a), ink supply mechanism 500 is equipped with supply cap 600, which is installed on ink supply element 116, supply joint 610, which is made of an elastic resin material such as rubber into which needle 49 (see Figure 2) of multifunction device 1 (see Figure 1) is inserted, supply valve 620, which blocks the flow path of ink when this supply joint 610 and the bottom wall make contact, first supply spring 630, which is housed inside this supply valve 620 and is made of a resinous elastic material, supply slider 640, which covers the open surface of supply valve 620 and can be operated in a uniaxial direction, which is the movement direction of supply valve 620 that is pressed into needle 49 (direction of arrow O1 in Figure 22(a), hereafter called the "axial direction O1 of ink supply mechanism 500"; regarding this direction, as is clear from Figure 14, ink supply mechanism 50 becomes parallel to the X-direction when ink cartridge 14 is loaded), second supply spring 650, which is housed inside this supply slider 640 and is formed with the same material and into the same shape as those of first supply spring 630, valve seat 660, which makes contact with this second supply slider 650 and receives check valve 670, and cover 680, which covers check valve 670 between the valve and this valve seat 660. Supply valve 620, first supply spring 630, supply slider 640, and second supply spring 650 constitute supply valve mechanism 501 that actually operates.

[0180] As illustrated in Figure 22(b), ambient air intake mechanism 510 is equipped with ambient air cap 700, which is installed on ambient air intake element 117, ambient air joint 710, which is made of an elastic resin material such as rubber, ambient air valve 720, which blocks the flow path of ink when this ambient air joint 710 and the bottom wall make contact and makes contact with back side 56 of multifunction device 1 (see Figure 5) and opens the flow path (passage) of ambient air when ink cartridge 14 is installed in multifunction device 1 (refill unit 13; see Figure 1), first ambient air spring 730, which is housed inside this ambient air valve 720 and is made of a resinous elastic material, ambient air slider 740, which covers the open surface of ambient air valve 720 and can be operated in a uniaxial direction, which is the movement direction of ambient air valve 720 that is pressed (direction of arrow 02 in Figure 22(b), hereafter called the "axial direction 02 of ambient air supply mechanism 510"; as is clear from Figure 14, ambient air supply 510 becomes parallel to the X-direction when ink cartridge 14 is loaded), and second ambient air spring 750, which is housed inside this ambient air slider 740 and is formed with the same material and into the same shape as those of first ambient air spring 730. Ambient air valve 720, first ambient air spring 730, ambient air slider 740, and second ambient air spring 750 constitute ambient air valve mechanism 511 that actually operates.

[0181] Below, supply cap 600, supply joint 610, supply valve 620, first and second supply springs 630 and 650, supply slider 640, valve seat 660, check valve 670, cover 680, ambient air cap 700, ambient air joint 710, ambient air valve 720, first and second ambient air springs 730 and 750, and ambient air slider 740 will be described with reference to Figures 23 through 33.

[0182] Figure 23 is a diagram that shows supply cap 600. Figure 23(a) is a diagram that shows a side view of supply cap 600, Figure 23(b) is a diagram that shows a side view of supply cap 600 from the perspective of arrow XXIIIb in Figure 23(a), Figure 23(c) is a diagram that shows a plan view of supply cap 600, Figure 23(d) is a diagram that shows a bottom view of supply cap 600, and Figure 23(e) is a cross-sectional view of supply cap 600 through line XXIIIe-XXIIIe in Figure 23(c).

[0183] As illustrated in Figure 23(a), supply cap 600 is formed with a two-step shape from a side view perspective (perspective of the direction perpendicular to the page in Figure 23(a)), and the upper side part in Figure 23(a) is supply securing part 601, which is fastened to the outer circumferential surface of ink supply element 116 and is formed into a roughly cylindrical shape, while the lower side part in Figure 23(b) is ink storage part 602, which has an ink storage space for preventing ink from dripping to the outside of ink cartridge 14.

[0184] Engagement holes 603a and 603b (see Figure 23(b) for engagement hole 601b), which are formed from the linking part of ink storage part 602 to the part in the vicinity of the top (vicinity of the upper side end in Figure 23(a)) and engage with protruding parts 116a and 116b (see Figure 21) of ink supply element 116 when supply cap 600 is secured to ink supply element 116 (see Figure 21), are formed on supply securing part 601.

[0185] As illustrated in Figure 23(b), a pair of supply cap cutout parts 604a and 604b (see Figure 23(c) for supply cap cutout part 604b), which are formed in a straight line that is roughly orthogonal to the straight line that connects engagement holes 603a and 603b (positions moved approximately 90° with respect to axial center O1 of ink supply mechanism 500) and are cut out facing the direction of ink storage part 602 from the top surface of supply securing part 601 (upper end surface in Figure 23(b)), are formed on supply securing part 601.

[0186] As illustrated in the front view in Figure 23(c) and in the bottom view in Figure 23(d), insertion hole 605, into which needle 49 (see Figure 2) is inserted (described below), is formed in roughly the center position of ink storage part 602 of supply cap 600. As illustrated in Figure 23(c), the region from the circle that forms insertion hole 605 to the circle one step outward is first upper wall 606a, which forms the upper end surface of ink storage part 602, and the region from the circle of the outer side that forms first upper wall 606a to the circle one step outward is sloping wall 606b, which forms a sloping surface that slopes downward in the direction of the bottom surface of ink storage part 602. The region from the circle of the outer side that forms this sloping wall 606b to the circle one step outward is lower wall 606c, which forms the lower end surface of ink storage part 602, and the region from the circle of the outer side that forms lower wall 606c to the circle one step outward is second upper wall 606d, which forms the lower end surface of supply securing part 601 and forms the upper end surface of ink storage part 602. The part that connects lower wall 606c and second upper wall 606d is outer circumferential wall 606e, which forms the outer circumferential surface of ink storage part 602. Sloping wall 606b forms the cylindrical part inside ink storage part 602, and outer circumferential wall 606e, which is connected to this sloping wall 606b by lower wall 606c, forms the cylindrical part of the outside that encloses sloping wall 606b (cylindrical part of the inside).

[0187] In Figure 23(d), sloping wall 606b slopes downward, so the insertion opening of needle 49 is formed into a tapered shape as illustrated in the cross-sectional view in Figure 23(e) such that it decreases in diameter towards insertion hole 605 with a maximum diameter of that of opening 600a, which forms the final exit of the ink. As a result, the inner circumferential surface on the side of axial center O1 of sloping wall 606b becomes the insertion path into which needle 49 (see Figure 2) is inserted. The space of range t7 illustrated in Figures 23(c) and 23(c) (in other words, the space formed by sloping wall 606b, lower wall 606c, and outer circumferential wall 606e) forms ink storing part 607, in which ink can be stored (accumulated).

[0188] When supply cap 600 is attached to ink supply element 116 (see Figure 21), protruding parts 116a and 116b of ink supply element 116 protrude in the outer circumferential direction, so supply cap 600 is attached as it increases in diameter in the outer circumferential direction. Because supply cap cutout parts 604a and 604b are formed, the diameter of supply cap 600 increases in the direction in which engagement parts 603a and 603b move away from one another. Therefore, when supply cap 600 is to be attached, it can be attached without applying strong pressure, so it is possible to improve the installation efficiency while reducing damage to supply cap 600.

[0189] Figure 24 is a diagram that shows supply joint 610. Figure 24(a) is a diagram that shows a side view of supply joint 610, Figure 24(b) is a diagram that shows a plan view of supply joint 610, Figure 24(c) is a diagram that shows a bottom view of supply joint 610, and Figure 24(d) is a cross-sectional view of supply joint 610 through line XXIVd-XXIVd in Figure 24(b).

[0190] As illustrated in Figure 24(a), supply joint 610 is formed in three steps from a side view perspective (perspective of the direction perpendicular to the page in Figure 24(a)). The part illustrated in the bottommost step (lower side in Figure 24(a)) is joint outer circumference part 611, which is the part that makes contact with second upper wall 606d of ink storage part 602 of supply cap 600 (see Figure 23) and the inner circumferential surface of supply securing part 601 and forms the outer circumference part of supply joint 610. This joint outer circumference part 611 is the part that is sandwiched between second upper wall 606d of supply cap 600 and the outside end surface of ink supply element 116 when in the state in which supply cap 600 is secured to ink supply element 116. The part illustrated at the top step of joint outer circumference part 611 is joint inner circumference part 612, which is pressed into and arranged inside ink supply element 116 (see Figure 21) and forms the inner circumference part of supply joint 610, and the upper portion of joint inner circumference part 612 is illustrated in Figure 24(a). Further, the part illustrated at the top step of joint inner circumference part 612 is joint contact part 613, which makes contact with supply valve 620 (see Figure 25). Supply joint 610 is made of an elastic material such as a resin rubber.

[0191] As illustrated in Figure 24(b), the axial center of supply joint 610 is positioned on axial center O1 of ink supply mechanism 500, and joint contact part 613, joint inner circumference part 612, and joint outer circumference part are sequentially formed towards the outer circumferential direction from this axial center O1.

[0192] As illustrated in Figure 24(d), joint contact part 613 projects from top surface 612a of joint inner circumference part 612 (surface on the side that makes contact with supply valve 620). Joint contact part 613 is formed such that it narrows toward tip 613a (upper end part in Figure 24(d)), and this tip 613a makes contact with the bottom surface of supply valve 620 and blocks the flow path of the ink. Further, joint protruding part 614, which protrudes from the inner circumferential surface toward axial center O1, opening 612c, which forms the insertion opening of needle 49 (see Figure 2) formed on bottom surface 612b of joint inner circumference part 612 (lower side in Figure 24(d)), and stepped insertion passage 612d, which is formed between opening 612c and joint protruding part 614, are formed on joint inner circumference part 612. As illustrated in Figure 24(c), the portion of insertion passage 612d that is formed in a stepped shape is formed with roughly equivalent spacing from axial center O1 in the outer circumferential direction. Inner circumferential surface 614a of joint protruding part 614 is provided parallel to the direction of axial center O1 of ink supply mechanism 500, and stepped surface 614b is provided in a direction that is orthogonal to the direction of axial center O1.

[0193] As illustrated in Figure 24(d), ink flow path 615, which passes through from bottom surface 612b of joint inner circumference part 612 to tip 613a of joint contact part 613 (from the upper side to the lower side in Figure 24(d)), is formed on supply joint 610. This ink flow path 615 consists of opening 612c, which is formed on bottom surface 612b, step part flow path 615a, which is demarcated by stepped insertion passage 612d connected to opening 612c, protruding part flow path 615b, which is demarcated by inner circumferential surface 614a of joint protruding part 614 connected to insertion passage 612d, and contact part flow path 615c, which is demarcated by stepped surface 614b connected to inner circumferential surface 614a of joint protruding part 614 and inner circumferential surface 613b of joint contact part 613 connected to this stepped surface 614b.

[0194] The lower half of step part flow path 615a is formed in a stepped shape in the direction of axial center O1, and the upper half of step part flow path 615a is formed in a tapered shape towards protruding part flow path 615b. Moreover, step part flow path 615a is formed in a stepped shape such that the diameter gradually decreases from opening 612c towards the contact surface with inner circumferential surface 614a of joint protruding part 614. The lower part of step part flow path 615a is formed in a stepped shape, so even if needle 49 (see Figure 2) is removed and a minute quantity of ink flows through ink flow path 615, the ink is held by the capillary force due to the angular part of this step part, so it is possible to prevent ink from dripping to the outside of supply joint 610. When needle 49 is removed, the dripping of ink can be likewise prevented, even if ink drips into ink flow path 615 from the tip of needle 49. In this embodiment, supply cap 600 is equipped with ink storage part 602, so the portion of the lower half of step part flow path 615a that is formed in a stepped shape may alternatively be formed in a tapered shape.

[0195] Protruding part flow path 615b is the flow path with the smallest diameter of ink flow path 615, and it is formed into a roughly hollow cylindrical shape. The inside diameter of this protruding part flow path 615b is formed such that it is slightly smaller than the diameter of needle 49 (see Figure 2). Contact part flow path 615c is formed into a roughly hollow cylindrical shape having an inside diameter that is larger than that of protruding part flow path 615b, and this inside diameter is sufficiently larger than the diameter of needle 49. Because stepped surface 614b is formed on the border of protruding part flow path 615b and contact part flow path 615c, the inside diameter in the direction of axial center O1 from protruding part flow path 615b to contact part flow path 615c drastically changes. As a result, as illustrated in Figure 24(d), joint contact part 613 assumes a structure that is cut out into a countersunk shape by its inner circumferential surface 613b and stepped surface 614b, and tip 613a of joint contact part 613 is positioned in the periphery of this cutout part.

[0196] Needle 49, which is inserted from opening 612c, is guided to the upper portion of step part flow path 615a that is formed in a tapered shape and is inserted into protruding part flow path 615b. At this time, because the inside diameter of protruding part flow path 615b is slightly smaller than the diameter of needle 49, needle 49 elastically adheres to inner circumferential surface 614a of joint protruding part 614 that forms protruding part flow path 615b and is pressed inside such that it spreads protruding part flow path 615b. In other words, joint protruding part 614 acts to seal the periphery of needle 49 that is pressed into protruding part flow path 615b. Moreover, if the area of the part of supply joint 610 that elastically adheres to the periphery of needle 49 becomes large, the resistance when ink cartridge 14 is installed in multifunction device 1 (see Figure 1) becomes large, and smooth installation thus becomes impossible. However, in this embodiment, a configuration that establishes joint protruding part 614 and makes contact with needle 49 only on the inner circumferential surface 614a was used, so it is possible to reduce the surface of contact with needle 49 and to smoothly install the cartridge in multifunction device 1. Moreover, needle 49 is inserted into ink flow path 615, so the flow path through which ink actually flows becomes the inside of needle 49. Further, because contact part flow path 615c is formed into a countersunk shape, the displacement of supply joint 610 in the direction of axial center O1 when needle 49 is inserted can be reduced.

[0197] Figure 25 is a diagram that shows supply valve 620. Figure 25(a) is a diagram that shows a side view of supply valve 620, Figure 25(b) is a diagram that shows a side view of supply valve 620 from the perspective of arrow XXVb in Figure 25(a), Figure 25(c) is a diagram that shows a plan view of supply valve 620, Figure 25(d) is a diagram that shows a bottom view of supply valve 620, and Figure 25(e) is a cross-sectional view of supply valve 620 through line XXVe-XXVe in Figure 25(c).

[0198] As illustrated in Figure 25(a), supply valve 620 is equipped with valve bottom wall 621, which forms the bottom surface of supply valve 620 (lower side surface in Figure 25(a)), and valve outer circumferential wall 622, which is provided along the direction of axial center O1 of ink supply mechanism 500 (see Figure 22) from this valve bottom wall 621.

[0199] A pair of valve guide grooves 623, into which slider loose insertion part 643 of supply slider 640 (see Figure 27) is loosely inserted, is formed on valve outer circumferential wall 622. As illustrated in Figure 25(c), the pair of valve guide grooves 623 is symmetrically formed with respect to axial center O1 of ink supply mechanism 500. Moreover, as illustrated in Figure 25(c), valve projecting wall 624, which projects in the opposite direction as valve bottom wall 621 from the top of valve outer circumferential wall 622 in the direction of axial center O1, is formed on valve outer circumferential wall 622, and valve guide grooves 623 are formed across the vicinity of the bottom of valve outer circumferential wall 622 from the tip of this valve projecting wall 624. As a result, because the distance of valve guide grooves 623 is secured as a long distance, the deviation of slider loose insertion part 643 from valve guide grooves 623 can be prevented.

[0200] Moreover, a pair of valve constraining parts 625, which project in the opposite direction as valve bottom wall 621 and restrict the operation of supply slider 640, is connected to valve outer circumferential wall 622. Each of the valve constraining parts 625 is equipped with valve hook part 626, which projects towards axial center O1 from its tip (tip of the upper side portion in Figure 25 (a)) and engages with supply slider 640.

[0201] Further, four valve protruding parts 622a, which protrude in semicircular shapes in the outer circumferential direction and are formed from the top to the bottom of valve outer circumferential wall 622, are formed on valve outer circumferential wall 622 with equal spacing along valve outer circumferential wall 622. These valve protruding parts 622a are provided in order to smoothly perform the operations of supply valve 620 when supply valve 620 is inserted into ink supply element 116 (see Figure 21). When there are no valve protruding parts 622a, the inner circumferential surface of ink supply element 116 and valve outer circumferential surface 622 sometimes make contact, so the contact surface with ink supply element 116 becomes large, and the resistance at the time of operation also becomes large. Therefore, because valve protruding parts 622a formed in semicircular shapes are provided, only valve protruding parts 622a make contact with the inner circumferential surface of ink supply element 116, and the operations of supply valve 620 inside ink supply element 116 become smooth.

[0202] Valve constraining parts 625 and valve projecting wall are formed such that they extend upward from valve outer circumferential wall 622. As a result, the misalignment of supply slider 640 in the direction orthogonal to the direction of axial center O1 can be prevented. Further, the operation of supply slider 640 in the direction of axial center O1 is restricted by valve constraining part 625, so first supply spring 630 can be reliably housed and operated.

[0203] As illustrated in Figure 25(c), four ink flow paths 627, which communicate in the vertical direction of valve bottom wall 621 (direction perpendicular to the page in Figure 25(c)), are formed on valve bottom wall 621 in positions corresponding to valve guides 623 and valve constraining part 625 in the direction of axial center O1 of ink supply mechanism 500 (direction perpendicular to the page in Figure 25(c)). Valve bottom wall 621 projects upward from its bottom surface and is equipped with valve bearing part 628, which is a platform that receives spring top part 632 of first supply spring 630 (see Figure 26). Valve bearing part 628 is made of two plate-shaped members arranged in parallel on valve bottom wall 621. As illustrated in Figure 25(e), the height of valve bearing part 628 in the direction of axial center O1 is formed such that it is substantially lower than valve outer circumferential wall 622. Valve bearing part 628 is provided in order to ensure that first supply spring 630 does not make contact with valve bottom wall 621 when first supply spring 630 is arranged in the space inside valve outer circumferential wall 622. This is because, if first supply spring 630 makes contact with valve bottom wall 621, the ink flow path is blocked and ink no longer flows. Therefore, valve bearing part 628 is provided in order to secure the ink flow path, and the part is acceptable as long as first supply spring 630 does not make contact with valve bottom wall 621, so it is formed to the minimum required height, and this prevents increases in the scale of the size in the direction of axial center O1 of ink supply mechanism 500.

[0204] Valve inner circumferential wall 629, which is formed in a roughly circular arc that covers the outer circumferential surface of spring top part 632 of first supply spring 630, is provided on the outside of valve bearing part 628 and on the inside of ink flow path 627. This valve inner circumferential wall 629 is provided in order to restrict the movement of first supply spring 630 in a direction that is orthogonal to axial center 01, and first supply spring 630 is accurately bent in the direction of axial center O1 by restricting the movement of first supply spring 630 in a direction that is orthogonal to axial center O1.

[0205] Figure 26 is a diagram that shows first supply spring 630. Figure 26(a) is a diagram that shows a side view of first supply spring 630, Figure 26(b) is a diagram that shows a plan view of first supply spring 630, Figure

26(c) is a diagram that shows a bottom view of first supply spring 630, and Figure 26(d) is a cross-sectional view of first supply spring 630 through line XXVId-XXVId in Figure 26(b).

[0206] First supply spring 630 is formed in a roughly reversed bowl shape (or a roughly hollow cone), and it is primarily equipped with ring-shaped spring bottom part 631, which forms the bottom surface of first supply spring 630 (end of the side with the larger diameter), ring-shaped spring top part 632, which is formed with a diameter that is smaller than the diameter of this spring bottom part 631 and forms the top part of the upper surface of first supply spring 630 (end of the side with the smaller diameter), and spring flexible part 633, which is connected between this spring top part 632 and spring bottom part 631 and bends and deforms when a load is applied in the direction of axial center O1 of ink supply mechanism 500 (the movement direction of supply valve 620 that is pressed into needle 49 (see Figure 2); also the biased direction of first supply spring 630 and second supply spring 650). Spring top part 632 makes contact with valve bearing part 628 of supply valve 620 (see Figure 25) and forms a pressing part that presses supply valve 620 in the direction of supply joint 610 (see Figure 24). The diameter of spring bottom part 631 is formed such that it is larger than the diameter of spring top part 632, so spring bottom part 631 forms the base when spring flexible part 633 is elastically deformed.

[0207] As illustrated in Figure 26(d), ink flow path 634, which communicates from the tip of spring top part 632 (right end surface in Figure 26(d)) to the bottom surface of spring bottom part 631 (left end surface in Figure 26 (d)), is formed on first supply spring 630. This ink flow path 634 consists of top part flow path 634a, which is demarcated by the inner circumferential surface of spring top part 632, flexible part flow path 634b, which is demarcated by the inner circumferential surface of spring flexible part 633, and bottom part flow path 634c, which is demarcated by the inner circumferential surface of spring bottom part 631. As illustrated in Figure 26(d), the area of the opening of this ink flow path 634 gradually increases from the tip of spring top part 632 towards the bottom surface of spring bottom part 631. Moreover, as illustrated in Figures 26(b) and 26(c), top part flow path 634a of spring top part 632 is formed in a circular shape from the perspective of the direction perpendicular to the page. When spring flexible part 633 is curved and formed into a roughly reversed bowl shape that is convex on the side moving away from axial center O1, spring flexible part 633 can be more easily deformed than in the case in which spring flexible part 633 is a roughly conic shape.

[0208] The cross-sectional shape of top part flow path 634a of spring top part 632 may also be formed into a roughly quadrilateral shape. When the opening of top flow path 634a is formed into a roughly quadrilateral shape, the effects of air bubbles contained in the ink can be reduced. Here, the air bubbles contained in the ink are spherical, so when the flow path is blocked by air bubbles that grow larger than the inside diameter of top part flow path 634a, the ink flow path (passage) is eliminated, and it is not possible to send ink to multifunction device 1 (see Figure 1) normally. As a result, the quality of printing by multifunction device 1 decreases. However, when the opening of top part flow path 634a is formed into a quadrilateral shape, the four corners are not blocked even if air bubbles that grow larger than the opening surface of top part flow path 634a accumulate, so it is possible to reduce decreases in printing quality by preventing the ink flow path from being blocked. Further, the opening surface of top part flow path 634a is not limited to a quadrilateral, and it may alternatively be formed into a polygon such as a hexahedron or a star shape. As in this embodiment, even if it is circular, it may be formed with a diameter with which the effects of air bubbles would be minimal.

[0209] As illustrated in Figure 26(d), spring top part 632 is formed into a relatively thick cylindrical shape that extends in the direction of axial center O1, and it is formed such that the cross-sectional shape perpendicular to the direction of axial center O1 (biased direction of first supply spring 630) is uniform. Similarly, spring bottom part 631 is also formed into a relatively thick cylindrical shape that extends in the direction of axial center O1, and it is formed such that the cross-sectional shape perpendicular to the direction of axial center O1 is uniform.

[0210] As illustrated in Figure 26(d), spring flexible part 633 is formed into a roughly reversed bowl shape (or roughly conical shape) that curves (or slopes) at a prescribed angle in the direction of axial center O1. As a result, the strength with respect to loading in the direction of axial center O1 become weak in comparison to spring bottom part 631 and spring top part 632. Furthermore, spring flexible part 633 is formed such that it has a thinner profile than spring bottom part 631 and spring top part 632, so this also reduces the strength. Accordingly, when first supply spring 630 elastically deforms, spring plastic 633 plastically deforms.

[0211] Second supply spring 650 is formed with the same shape as that of first supply spring 630, and the composition of second supply spring 650 consists of spring bottom part 651, spring top part 652, spring flexible part 653, and ink flow path 654 (top part flow path 654a, flexible part flow path 654b, and bottom part flow path 654c). Further, first ambient air spring 730 and second supply spring 750 are also formed with the same shape as that of first supply spring 630, and they respectively consist of spring bottom parts 731 and 751, spring top parts 732 and 752, spring flexible parts 733 and 753, ink flow paths 734 and 754 (top part flow paths 734a and 754a, flexible part flow paths 734b and 754b, and bottom part flow paths 734c and 754c).

[0212] Figure 27 is a diagram that shows supply slider 640. Figure 27(a) is a diagram that shows a side view of supply slider 640, Figure 27(b) is a diagram that shows a side view of supply slider 640 from the perspective of arrow XXVIIb in Figure 27(a), Figure 27(c) is a diagram

that shows a plan view of supply slider 640, Figure 27(d) is a diagram that shows a bottom view of supply slider 640, and Figure 27(e) is a cross-sectional view of supply slider 640 through line XXVIIe-XXVIIe in Figure 27(c).

[0213] Supply slider 640 is formed from a resin material with a higher degree of hardness than first supply spring 630 (see Figure 26) and second supply spring 650, and it is primarily equipped with slider outer circumferential wall 641, which forms the outer periphery of supply slider 640, a pair of slider projecting walls 642a and 642b, which project from this slider outer circumferential wall 641 in the direction of axial center O1 of ink supply mechanism 500, a pair of slider loose insertion parts 643, which extend from slider outer circumferential wall 641 to the upper tip of slider projecting wall 642a (upper side end in Figure 27(a)) and are loosely inserted into valve guide grooves 623 of supply valve 620 (see Figure 25), slider platform part 644, either side on which first and second supply springs 630 and 650 are arranged, which is formed on the inside of slider outer circumferential wall 641 and makes contact with spring bottom parts 631 and 651 of first and second springs 630 and 650, and slider through-hole 645, which is formed in the center position of slider platform part 644 and connects the top and bottom of slider platform part 644. As is clear from Figure 27(c), slider projecting walls 642a and 642b are positioned [symmetrically] such that they sandwich axial center O1, and the pair of slider loose insertion parts 643 is also positioned [symmetrically] such that they sandwich axial center O1.

[0214] The inside diameter of slider outer circumferential wall 641 is formed such that it is roughly equivalent to the outside diameter spring lower parts 631 and 651 of first and second supply springs 630 and 650, and slider projecting walls 642a and 642b are formed such that they project from this slider outer circumferential wall 641 in the direction of axial center O1, so when first and second supply springs 630 and 650 are arranged, the movement of first and second springs 630 and 650 in the direction orthogonal to axial center O1 is restricted. As a result, first and second springs 630 and 650 are elastically deformed in the direction of axial center O1.

[0215] Slider loose insertion parts 643 are formed such that they extend in the direction of axial center O1 of supply slider 640 (formed across slider outer circumferential wall 641 and slider protruding part 642), so when they are loosely inserted into valve guide grooves 623 (see Figure 25), they are moved smoothly in the direction of axial center O1 of supply slider 640, and misalignment in the direction orthogonal to the direction of axial center O1 can be prevented.

[0216] Figure 28 is a diagram that shows valve seat 660. Figure 28(a) is a diagram that shows a side view of valve seat 660, Figure 28(b) is a diagram that shows a plan view of valve seat 660, Figure 28(c) is a diagram that shows a bottom view of valve seat 660, and Figure 28(d) is a cross-sectional view of valve seat 660 through line XXVIIId-XXVIIId in Figure 28(b).

[0217] As illustrated in Figure 28(a), valve seat 660 is equipped with valve seat bottom part 661, which forms the bottom surface of this valve seat 660 and makes contact with spring top part 632 of second supply spring 650, and valve seat bearing parts 662, which are placed on the top surface of this valve seat bottom part 661 (upper side in Figure 28(a)). Each valve seat bearing part 662 is equipped with valve seat sloping surface 662a, which slopes downward as it approaches the center of valve seat 660, and check valve 670, which will be described below, is received by this valve seat sloping surface 662a.

[0218] As illustrated in Figure 28(b), six valve seat bearing parts 662 are formed with prescribed spacing in the circumferential direction of valve seat 660. First valve seat through-holes 662b, which pass through the front and back of valve seat 660, are formed on three of the six valve seat bearing parts. These first valve seat through-holes 662b are formed on a portion other than valve seat sloping surface 662a of valve seat bearing part 662 (horizontal portion of valve seat bearing part 662). Therefore, because first valve seat through-holes 662b are formed on a portion that differs from the portion that receives check valve 670, the blockage of the ink flow path can be prevented.

[0219] Moreover, second valve seat through-holes 663, which pass through valve seat bottom part 661, are formed between valve seat bearing parts 662 of valve seat 660. Six of these second valve seat through-holes 663 are formed with left-right symmetry based on the center line (center line Q illustrated in Figure 28) that passes through axial center O1 of ink supply mechanism 500 (see Figure 22) in Figure 28(b). This second valve seat through-holes 663 form an ink flow path through which ink flows.

[0220] As illustrated in Figure 28(c), concave valve seat communicating grooves 664, which connect each of the second valve seat through-holes 663, are formed on the bottom surface of valve seat bottom part 661. These valve seat communicating grooves 664 connect second valve seat through-holes 663 to one another in a roughly linear manner on the bottom surface of valve seat bottom part 661. Therefore, three valve seat communicating grooves 664, which intersect at axial center O1, are formed. Moreover, a pair of valve projecting parts 665, which project from this bottom surface, is formed on the bottom surface of valve seat bottom part 661. Spring top part 652 of second supply spring is housed in each of these valve seat projecting parts 665, and they make contact with the outer circumferential surface of spring top part 652 of second spring 650, so the movement of second supply spring 650 in the direction orthogonal to axial center O1 is restricted.

[0221] As illustrated in Figure 28(d), a gap is formed between valve seat sloping surface 662a of valve seat bearing parts 662 and second valve seat through-holes 663 in the direction of axial center O1. As a result, even if check valve 670 is supported on valve seat sloping surface 662a, the flow path of the ink is secured. More-

over, even if the end surface of spring top part 632 of second supply spring 650 makes contact with the bottom surfaces of second valve seat through-holes 663, second valve seat through-holes 663 are positioned to the outside of the virtual circumference of valve seat projecting part 664 (virtual line R in Figure 28(c)), so the flow path of the ink is secured by valve seat communicating grooves 664. Valve seat communicating grooves 664 connect all of the second valve seat through-holes 663, so even if there are second valve seat through-holes 663 that are enclosed by valve seat projecting part 665, the ink flow path can be reliably secured.

[0222] Figure 29 is a figure that shows check valve 670. Figure 29(a) is a diagram that shows a side view of check valve 670, Figure 29(b) is a diagram that shows a plan view of check valve 670, Figure 29(c) is a diagram that shows a bottom view of check valve 670, and Figure 29(c) is a cross-sectional view of check valve 670 through line XXIXd-XXIXd in Figure 29(a).

[0223] Check valve 670 is roughly formed into an umbrella shape from a side view perspective (perspective in the direction perpendicular to the page in Figure 29 (a)), and it consists of umbrella part 671 and shaft part 672. Umbrella part 671 blocks the flow path of the ink by making contact with cover 680 (see Figure 30), and, as illustrated in Figures 29(b) and 29(d), it is equipped with linking part 671, which is connected to shaft part 672, and wing part 671b, which extends roughly uniformly in the outer circumferential direction from this linking part 671a and is formed with a thin profile. As a result, when it makes contact with cover 680, wing part 671b, which is formed with a thin profile, adheres to cover 680 as it is elastically deformed, so it is possible to reliably block the ink flow path communication between cover 680 and check valve 670.

[0224] As illustrated in Figure 29(a), the bottom surface of umbrella part 671 is formed in a curved shape and is supported by valve seat bearing parts 662 of valve seat 660 (see Figure 28), so the flow path of the ink is opened in the state in which umbrella part 671 is supported by valve seat bearings 662 of valve seat 660, while the flow path of the ink is blocked in the state in which umbrella part 671 of check valve 670 makes contact with cover 680.

[0225] Shaft part 672 is a part that is inserted into second cover through-hole 684 (see Figure 30) of cover 680, which will be described below. This shaft part 672 is positioned in the vicinity of cover 680 in the state in which it is attached to cover 680, and it has ball part 672a, which is formed into a roughly spherical shape. This ball part 672a is formed with a diameter that is greater than that of second cover through-hole 684 of cover 680, and it prevents check valve 670 from falling off once it is attached to cover 680. As a result, it is possible to reduce the loss of check valve 670 when manufacturing ink cartridge 14, and operationality is improved.

[0226] Figure 30 is a diagram that shows cover 680. Figure 30(a) is a diagram that shows a side view of cover 680, Figure 30(b) is a diagram that shows a plan view of cover 680, Figure 30(c) is a diagram that shows a bottom view of cover 680, and Figure 30(d) is a cross-sectional view of cover 680 through line XXXd-XXXd in Figure 30 (b).

[0227] Cover 680 is formed into a roughly cylindrical shape in which the bottom surface side (side of valve seat 660 (see Figure 28)) is opened. Cover 680 is equipped with cover outer circumferential wall 681, which forms the outer periphery, and cover top part 682, which forms the top surface of cover 680 (upper side in Figure 30(a)), and it is formed such that the bottom surface side is opened. Valve seat 660 is fitted into the opening of the bottom surface of cover 680 (lower side in Figure 30(a)), and check valve 670 is housed between valve seat 660 and cover 680. In other words, the space that houses check valve 670 is formed by cover 680 and valve seat 660.

[0228] As illustrated in Figures 30(b) and 30(c), six first cover through-holes 683, which pass through the front and back of cover 680, are formed in the circumferential direction with respect to axial center O1. These first cover through-holes 683 form a flow path through which ink flows, and when umbrella part 671 of check valve 670 (see Figure 29) makes contact with cover top part 682, first cover through-holes 683 are blocked, and the ink flow path is thus also blocked.

[0229] Moreover, second cover through-hole 684, into which shaft part 672 of check valve 670 is inserted, is formed in the center of cover top part 682 (position passing through axial center O1 of ink supply mechanism 500). Shaft part 672 of check valve 670 is inserted into this second cover through-hole 684, and check valve 670 is thereby attached. Even in the state in which check valve 670 is inserted into second cover through-hole 684, the flow path of the ink is formed on a portion of this inner circumferential surface. However, when umbrella part 671 of check valve 670 makes contact with cover top part 682, the entire first cover through-hole is blocked, so the ink flow path of second cover through-hole 684 formed in the center is simultaneously blocked.

[0230] Figure 31 is a diagram that shows ambient air cap 700. Figure 31(a) is a diagram that shows a side view of ambient air cap 700, Figure 31(b) is a diagram that shows a side view of ambient air cap 700 from the perspective of arrow XXXIb in Figure 31 (a), Figure 31(c) is a diagram that shows a plan view of ambient air cap 700, Figure 31(d) is a diagram that shows a bottom view of ambient air cap 700, and Figure 31(e) is a cross-sectional view of ambient air cap 700 through line XXXIe-XXXIe in Figure 31(c).

[0231] As illustrated in Figure 31(a), ambient air cap 700 is equipped with roughly cylindrical ambient air securing part 701, which forms the side wall of this ambient air cap 700 and is fastened to ambient air intake element 117 (see Figure 21), and ambient air cap bottom wall 702, which forms the bottom wall of ambient air cap 700. Engagement holes 703a and 703b (see Figure 31(b) for

engagement hole 703b), which are formed from the bottom part of ambient air securing part 701 (lower side in Figure 31(a)) to the vicinity of the top part (vicinity of the end of the upper side in Figure 31(a)) and are engaged with protruding parts 117a and 117b of ambient air intake element 117 described above when ambient air cap 700 is fastened to ambient air intake element 117, are formed on ambient air securing part 701.

[0232] As illustrated in Figure 31(b), ambient air cap cutout parts 704a and 704b (ambient air cap cutout part 704b is not illustrated in the figure), which are formed in positions moved approximately 90° with respect to axial center 02 from the positions in which engagement holes 703a and 703b are formed and are cut out from the top end of ambient air securing part 701 to the vicinity of the bottom part, are formed on ambient air securing part 701.

[0233] Moreover, as illustrated in the plan view in Figure 31(c) and in the bottom view in Figure 31(d), ambient air cap insertion hole 705, into which joint skirt part 714 (see Figure 32) of ambient air joint 710, which will be described below, and valve open part 721a (see Figure 33) of ambient air valve 720 are inserted, is formed in a roughly central position on ambient air cap bottom wall 702. Ambient air joint 710 (see Figure 32) is housed such that it makes contact with the inside surface of ambient air cap bottom wall 702 and the inner circumferential surface of ambient air securing part 701.

[0234] When ambient air cap 700 is attached to ambient air intake element 117, protruding parts 117a and 117b of ambient air intake element 117 protrude in the outer circumferential direction, as with supply cap 600, so ambient air cap 700 is attached as it increases in diameter in the outer circumferential direction. Therefore, when ambient air cap 700 is to be attached, it can be attached without applying strong pressure, so it is possible to improve the installation efficiency while reducing damage to ambient air cap 700.

[0235] Figure 32 is a diagram that shows ambient air joint 710. Figure 32(a) is a diagram that shows a side view of ambient air joint 710, Figure 32(b) is a diagram that shows a plan view of ambient air joint 710, Figure 32(c) is a diagram that shows a bottom view of ambient air joint 710, and Figure 32(d) is a cross-sectional view of ambient air joint 710 through line XXXIId-XXXIId in Figure 32(b).

[0236] As illustrated in Figure 32(a), ambient air joint 710 is formed in four steps from a side view perspective (perspective of the direction perpendicular to the page in Figure 32(a)). The part illustrated in the second step from the bottom (lower side in Figure 32(a)) is joint outer circumference part 711, which is the part that makes contact with the inner circumferential surface of ambient air securing part 701 (see Figure 31) of ambient air cap 700 and ambient air cap bottom wall 702 and forms the outer circumference part of ambient air joint 710. The part illustrated at the top step of this joint outer circumference part 711 is joint inner circumference part 712, which is established on the inside of ambient air intake element 117 (see Figure 21) and forms the inner circumference part of ambient air joint 710, and the top part of joint inner circumference part 712 is illustrated in Figure 32(a). Further, the part illustrated at the top step of joint inner circumference part 712 is contact part 713, which makes contact with ambient air valve 720. The part illustrated at the bottommost step is joint skirt part 714 formed with a thin profile, which is a member that covers the outside surface of valve open part 721a (see Figure 33) of ambient air valve 720 and exposes it to the outside from ambient air cap 700.

[0237] As illustrated in Figure 32(b), the axial center of joint outer circumference part 711, joint inner circumference part 712, joint contact part 713, and joint skirt part 714 is positioned on the same axial center as in the direction of axial center 02 of ambient air intake mechanism 510. Moreover, ambient air joint 710 is made of an elastic material such as a resin rubber, so when ink cartridge 14 is installed in multifunction device 1 (see Figure 1), joint skirt part 714, which is formed with a thin profile, makes contact with the end surface of multifunction device 1 and is elastically deformed.

[0238] As illustrated in Figure 32(d), joint contact part 713 projects from top surface 712a of joint inner circumference part 712 (surface on the side that makes contact with ambient air valve 720). Joint contact part 713 is formed such that it narrows toward tip 713a (upper end part in Figure 32(d)), and this tip 713a makes contact with the bottom surface of ambient air valve 720 and blocks the ambient air intake path. Moreover, as illustrated in Figure 32(d), joint passage 715, which passes from the bottom surface of joint inner circumference part 712 to tip 713a of joint contact part 713 (upper side to lower side in Figure 32(d)), is formed on ambient air joint 710, and valve open part 721a of ambient air valve 720 is inserted into this joint passage 715.

[0239] Figure 33 is a diagram that shows ambient air valve 720. Figure 33(a) is a diagram that shows a side view of ambient air valve 720, and Figure 33(b) is a diagram that shows a bottom view of ambient air valve 720. Ambient air valve 720 has a configuration in which valve open part 721 a, which projects from the bottom surface of valve bottom wall 721 and opens the ambient air intake path by making contact with the side of multifunction device 1 (see Figure 1), is added to supply valve 620. Therefore, detailed descriptions of valve bottom wall 721, valve outer circumferential wall 722, valve protruding part 722a, valve guide groove 723, valve projecting wall 724, valve constraining part 725, valve hook part 726, ambient air intake path 727 (part corresponding to ink flow path 627), valve bearing part 728, and valve inner circumferential wall 729 will be omitted here. Illustrations of parts that cannot be visually confirmed in the side view (Figure 33(a)) and bottom view (Figure 33(b)) of ambient air valve 720 will also be omitted here.

[0240] Ambient air valve 720 is equipped with valve open part 721a, which projects from the bottom surface of valve bottom wall 721. Valve open part 721a is posi-

tioned on axial center 02 of ambient air intake mechanism 510 and is roughly formed into a rod shape. Roughly semicircular convex part 721b, which projects from the bottom part (lower end surface in Figure 22) to valve bottom wall 721 in the outer circumferential direction, is formed on the outer circumferential surface of valve open part 721a. This valve open part 721a passes into joint passage 715 (see Figure 32) of ambient air joint 710 described above, and a portion of it is exposed to the outside of ambient air cap 700 (see Figure 31). When ink cartridge 14 is installed in multifunction device 1 (see Figure 1), valve open part 721a makes contact with the end surface of multifunction device 1, and the contact with joint contact part 713 (tip 713a) of ambient air joint 710 is broken, thus forming an ambient air intake path.

[0241] When ink cartridge 14 is installed in multifunction device 1 and valve open part 721a operates, joint skirt part 714 of ambient air joint 710 also makes contact with the end surface of multifunction device 1 and elastically deforms, and this blocks communication between the ambient air intake path and the outside of joint skirt part 714. As a result, ambient air that is introduced from the side of multifunction device 1 can be introduced smoothly. Moreover, even if joint skirt part 714 elastically deforms toward axial center 02 and makes contact with valve open part 721a, the ambient air intake path can be secured by convex part 721b of valve open part 721a. It is therefore possible to prevent the ambient air intake path from being blocked and ensure that ambient air is introduced into ink reservoir chamber 111 (see Figure 14).

[0242] Next, the state in which ink supply mechanism 500 and ambient air intake mechanism 510 are installed into ink supply element 116 and ambient air intake element 117 will be described with reference to Figure 34. Figure 34 is a partial cross-sectional view that shows the state in which ink supply mechanism 500 and ambient air intake mechanism 510 are installed into ink supply element 116 and ambient air intake element 117.

[0243] As illustrated in Figure 34, ink supply mechanism 500 is inserted into and attached to inner circumferential surface 800 of ink supply element 116, and ambient air intake mechanism 510 is inserted into and attached to inner circumferential surface 810 of ambient air intake element 117.

[0244] First, ink supply mechanism 500, which is attached to ink supply element 116, will be described. On inner circumferential surface 800 of ink supply element 116, projecting wall 801, which projects in the direction of the inside of inner circumferential wall 800, is formed on the side of first supply communicating hole 421 of supply path forming part 420, and this projecting wall 801 is formed into a stepped shape that can house cover 680. Cover 680 is inserted such that it makes contact with stepped surface 801a of this projecting wall 801, which is formed into a stepped shape, and the position on the side of first supply communicating hole 421 of ink supply mechanism 500 is thus determined.

[0245] Shaft part 672 of check valve 670 is inserted into second cover through-hole 684 of cover 680, and valve seat 660 is arranged such that it houses this check valve 670 inside cover 680. Second supply spring 650 is arranged on the bottom surface side of this valve seat 660 (left side in Figure 34), and supply slider 640 is arranged such that it houses this second supply spring 650. First supply spring 630 is housed by supply slider 640 on the opposite side of second supply spring 650, and first supply spring 630 is arranged between supply slider 640 and supply valve 620. Moreover, supply joint 610 is arranged such that it makes contact with the bottom surface of supply valve 620, and supply cap 600 is fastened to the outside of ink supply element 116 such that it makes contact with the bottom surface of this supply joint 610. Supply cap 600 is fastened as it engages with protruding parts 116a and 116b of ink supply element 116, so the position on the outside of ink supply mechanism 500 is determined. Therefore, the position of the direction of axial center O1 of ink supply mechanism 500 is determined by supply cap 600 and stepped surface 801a of inner circumferential surface 800 of ink supply element 116.

[0246] The inside diameter of inner circumferential surface 800 of ink supply element 116 is formed such that it is slightly larger than the outside diameter of supply valve 620, and it is configured such that the operation of supply valve 620 in the direction of axial center O1 can be performed smoothly inside ink supply element 116. As described above, four valve protruding parts 622a are formed on the outer circumferential surface of supply valve 620, and it is configured such that the contact surface with inner circumferential surface 800 is small. Therefore, even if supply valve 620 operates in a diagonal direction with respect to axial center O1 and makes contact with inner circumferential surface 800, it is possible to prevent the state in which supply valve 620 cannot be operated. Moreover, a gap is formed between supply valve 620 and inner circumferential surface 800, so an ink flow path that passes through the inside of ink supply mechanism 500 and an ink flow path that flows through the outside of supply valve 620 are formed. As a result, inner circumferential surface 800 of ink supply element 116 is the space that forms the ink flow path chamber.

[0247] As described above, slider platform part 644 is in a state in which it is sandwiched by spring bottom part 631 of first supply spring 630 and spring bottom part 631 of the second spring member 650. On the contact side of spring platform part 644 with spring bottom part 631 of second supply spring 650, it is engaged by two valve hook parts 626 of supply valve 620, and movement in the direction of axial center O1 is thus restricted. The space formed between supply valve 620 and supply slider 640 is shorter than the length of first supply spring 630 in the direction of axial center O1, so first supply spring 630 is already plastically deformed in the position in which it is attached to ink supply element 116.

[0248] Next, ambient air intake mechanism 510, which

is attached to ambient air intake element 117, will be described. On inner circumferential surface 810 of ambient air intake element 117, protruding part 811, which protrudes in the direction of ambient air intake mechanism 510 (left direction in Figure 34), is formed on the end surface of ambient air intake passage forming part 430 on the side of first ambient air communicating chamber. This protruding part 811 is configured as a pair of plate-shaped member, and it makes contact with the end surface of spring top part 752 of second ambient air spring 750. As a result, an ambient air intake path is formed between protruding part 811 and spring top part 752 of second ambient air spring 750. Moreover, the position of ambient air intake mechanism 510 on the side of first ambient air communicating hole 434 is determined as a result of second ambient air spring 750 making contact with protruding part 811.

[0249] As with the ink supply mechanism 500 side, ambient air slider 740 is arranged on ambient air intake mechanism 510 such that it houses second ambient air spring 750, and first ambient air spring 730 is housed by ambient air slider 740 on the opposite side of second ambient air spring 750, while first ambient air spring 730 is arranged between ambient air slider 740 and ambient air valve 720. Moreover, ambient air joint 710 is arranged such that it makes contact with the bottom surface of ambient air valve 720, and ambient air cap 700 is fastened to the outside of ambient air intake element 17 such that it makes contact with the bottom surface on the outer circumferential side from joint skirt part 714 of this ambient air joint 710. Ambient air cap 700 is fastened as it engages with protruding parts 117a and 117b of ambient air intake element 117, so the position on the outside of ambient air intake mechanism 510 is determined. Therefore, the position of the direction of axial center 02 of ambient air intake mechanism 510 is determined by ambient air cap 700 and protruding part 811 of inner circumferential surface 810 of ambient air intake element 117.

[0250] Moreover, the space formed between ambient air valve 720 and ambient air slider 740 is shorter than the length of first ambient air spring 730 in the direction of axial center 02, so, as with ink supply mechanism 500, first ambient air spring 730 is already plastically deformed in the position in which it is attached to ambient air intake element 117.

[0251] Next, the manufacturing process of ink cartridge 14 will be described with reference to Figures 35 through 39. Figure 35 is a diagram that explains the manufacturing process before film 160 is welded. Figure 36 is a diagram that explains the welding process of film 160. Figure 36(a) is a diagram that explains the welding surface of frame part 110 onto which film 160 is welded, and Figure 36(b) is a diagram that explains the welding process in which film 160 is welded to frame part 110. Figure 37 is a diagram that explains the manufacturing process performed after film 160 is welded. Figure 37(a) is a diagram that explains the attachment process in which ink supply mechanism 500 and ambient air intake mechanism 510 are attached to frame part 110, Figure 37(b) is a diagram that explains the decompression process, and Figure 37(c) is a diagram that explains the ink dispensing process. Figure 38 is a diagram that explains the installation process of case 200. Figure 38(a) is a diagram that explains the process in which case 200 sandwiches frame part 110, and Figure 38(b) is a diagram that explains the welding process in which case 200 is welded. Figure 39 is a diagram that explains the manufacturing process performed before ink cartridge 14 is shipped. Figure 39(a) is a diagram that explains the process in which protector 300 is attached, and Figure 39(b) is a diagram that explains the process in which ink cartridge 14 is packaged in packaging bag 930.

[0252] As illustrated in Figure 35, in the manufacture of ink cartridge 14, sensor arm 470 is first attached to frame part 110. Frame part 110 and sensor arm 470 are each molded using injection molding in a preliminary process (molding process). In other words, each is respectively molded in a first molding process (preparatory process) in which frame part 110 is injection-molded and in a second molding process (preparatory process) in which sensor arm 470 is injection-molded.

[0253] In sensor arm 470, attachment shaft 472a, which is established on attachment part 472 of sensor arm 470 is attached to arm sandwiching part 425, which is established in the vicinity of supply path forming part 420 of frame part 110 (sensor arm 470 attachment process; preparatory process). Arm sandwiching part 425 opens on the opposite side as the side of ink supply element 116 (top of Figure 35). In other words, the opening of arm sandwiching part 425 opens on the side of second reservoir chamber opening 114. As a result, sensor arm 470 can be attached in the range in which first chamber 111a and second chamber 111b communicate, so sensor arm 470 can be efficiently attached with little interference. Moreover, shielding arm part 473c of arm part 473 is attached such that it is housed on the inside of detection part 140 (inside enclosure part 141). When sensor arm 470 is attached to arm sandwiching part 425, the vertical and horizontal range of movement of shielding arm part 473c is restricted by each wall 141a to 141d of enclosure part 141 of detection part 140. In other words, once the attachment of sensor arm 470 is complete, sensor arm 470 cannot be easily detached, so it is possible to prevent the manufacturing process of ink cartridge 14 from becoming complicated and to prevent sensor arm 470 from detaching from detection part 140 when the ink cartridge is transported. As a result, when ink cartridge 14 is installed in multifunction device 1, the empty ink state can be reliably detected, so the reliability of the product can be improved.

[0254] In this embodiment, a supporting part that forms the axis of rotational operation of sensor arm 470 is configured as attachment part 472 (attachment shaft 472a) of sensor arm 470 is supported on arm sandwiching part 425 of frame part 110, but a configuration in which an

attachment shaft is provided on the side of frame part 110 and a sandwiching part is provided on the side of sensor arm 470 may also be used, and a configuration in which sensor arm 470 and frame part 110 are attached using a hinge junction would also be acceptable. In other words, as long as sensor arm 470 is attached such that it can rotate with respect to frame part 110, its attachment structure may take any form.

[0255] When the attachment of sensor arm 470 is complete, ink dispensing plug 520 is then pressed inside dispensing cylinder part 451 of ink dispensing part 150 (ink dispensing plug 520 pressing process; preparatory process). Ink dispensing plug 520 is pressed such that outside end surface 520a of ink dispensing plug 520 is in roughly the same plane as the outside surface of frame part 110, and it is not pressed to a position such that it makes contact with bottom part 451b of dispensing cylinder part 451. This is because, as described above, first dispensing communicating hole 452 of dispensing passage forming part 450 is formed on the side surface of dispensing cylinder part 451, and when ink dispensing plug 520 is pressed to the back of dispensing cylinder part 451, first dispensing communicating hole 452 becomes block, making it impossible to dispense ink. Moreover, ink dispensing plug 520 may be attached before sensor arm 470 is attached.

[0256] As illustrated in Figure 36(a), when the attachment of sensor arm 470 and ink dispensing plug 520 is complete, film 160 is then welded (film 160 securing process). Film 160 is welded to frame part 110 such that it covers both the openings of first opening 112a and second opening 112b. In other words, film 160 is welded to both sides of frame part 110 in two securing processes - a first securing process in which film 160 is welded to first opening 112a (preparatory process), and a second securing process in which film 160 is welded to second opening 112b.

[0257] As illustrated in Figure 36(b), film 160 is cut such that it is larger than the external outline of frame part 110, and it is installed such that it covers frame part 110. At this time, film 160 is arranged on first opening 112a and second opening 112b without wrinkles by aspirating film 160 with an aspirator (not illustrated in the figure) from the side of frame part 110. Ultrasound welded surface 900 of an ultrasonic welding device (not illustrated in the figure) is then installed such that it covers the outer circumference parts of first and second openings 112a and 112b (outer circumference welded parts 400a and 400b) from the top of film 160, and film 160 is welded to frame part 110. When film 160 is welded to each welded part, the parts painted black in Figure 37(a) (outer circumference welded parts 400a and 400b and inner circumference welded parts 411a to 417a and 411b to 417b) are welded.

[0258] On frame part 110, multiple inner circumference welded parts 411a to 417a and 411b to 417b are dispersed on the inner circumferential side of outer circumference welded parts 400a and 400b, so if ultrasonic welding is performed with respect to all of the welded parts, the structure of ultrasound welded surface 900 becomes complex, and the manufacturing cost therefore increases. However, in this embodiment, ultrasound welded surface 900 of the ultrasonic welding device is configured such that it covers all of the welded parts (outer circumference welded parts and inner circumference welded parts), so it is possible to reduce increases in the manufacturing cost of the welding process of film 160.

[0259] Moreover, film 160 is made of a double-layered film comprising a nylon film and a polyethylene film (called "nylon polyethylene" hereafter), and the side that makes contact with frame part 110 is the polyethylene film later. This nylon polyethylene completely blocks liquids, but it is relatively gas permeable, so a small amount of gas circulation is possible between ink reservoir chamber 111, which is roughly sealed by film 160, and packaging bag 930 (see Figure 39(b)), which will be described below. As a result, gas that is present in the ink inside ink reservoir chamber 111 can gradually pass through film 160 and move into the space formed between enclosure element 930 and case 200, so the generation of air bubbles inside the ink can be prevented. Accordingly, the occurrence decreases in printing quality due to air bubbles inside the ink can be prevented. Moreover, as long as it can maintain strength and is relatively gas permeable, film 160 may be made of any type of substance. For example, a film in which a nylon film and a polypropylene film are formed into two layers or a film formed by mixing nylon and polyethylene or nylon and polypropylene could be used.

[0260] Frame part 110 is formed from a polyethylene resin, and it is made of the same type of substance as the film of film 160 on the side of frame part 110. Because film 160 and frame part 110 are formed from the same material, both film 160 and the welded parts can be fused and welded reliably at the time of ultrasonic welding. In this embodiment, film 160 has a double-layer structure. Nylon films are superior to polyethylene films from the perspective of strength, but their melting point is high, so they are deficient from the perspective of welding operationality. Therefore, when film 160 is formed with a double-layer structure made of nylon and polyethylene, the strength is secured, and by using the polyethylene layer as the layer that is welded to frame part 110, welding can be performed at a low heating temperature, so welding operationality is secured. Furthermore, the nylon layer does not melt in the welding operation, so there are fewer changes in the thickness of the film in the vicinity of the welded parts, and the strength of the film in the vicinity of the welded parts can also be maintained.

[0261] As illustrated in Figure 37(a), when the welding of film 160 is complete, ink supply mechanism 500 and ambient air intake mechanism 510 are attached to frame part 110. Ink supply mechanism 500 is attached to ink supply element 116 (ink supply mechanism 500 attachment process; preparatory process), and ambient air intake mechanism 510 is attached to ambient air intake

element 117 (ambient air intake mechanism [500] attachment process; preparatory process). In the attachment of ink supply mechanism 500 (attachment process), a component in which cover 680, check valve 670, and valve seat 660 are formed as a unit is inserted inside ink supply element 116 (position that makes contact with stepped surface 801a). At this time, the tip of check valve 670 is inserted into first supply communicating hole 421 (see Figure 34), and it is attached such that it projects into the space enclosed by supply partition wall 422. A component in which supply joint 610, supply valve 620, first supply spring 630, supply slider 640, and second supply spring 650 are formed as a unit inside supply cap 600 is inserted inside inner circumferential surface 800 of ink supply element 116, and supply cap 600 is secured to the outer circumferential surface of ink supply element 116. At this time, supply cap 600 is pushed in the direction of ink supply element 116, and engagement holes 603a and 603b of supply cap 600 are engaged with protruding parts 116a and 116b of ink supply element 116. In supply joint 610, joint inner circumference part 612 is pressed inside inner circumferential surface 800 of ink supply element 116, and joint outer circumference part 611 is sandwiched between ink supply element 116 and supply cap 600. When the attachment of supply cap 600 to ink supply element 116 is complete, the attachment of ink supply mechanism 500 is complete, and ink supply part 120 is constructed.

[0262] As with the attachment of ink supply mechanism 500 to ink supply element 116, the attachment of ambient air intake mechanism 510 to ambient air intake element 117 (attachment process) is performed in a process in which a component in which ambient air joint 710, ambient air valve 720, first ambient air spring 730, ambient air slider 740, and second ambient air spring 750 are formed as a unit in ambient air cap 700 is inserted inside inner circumferential surface 810 of ambient air intake element 117, and ambient air cap 700 is fixed to the outer circumferential surface of ambient air intake element 117. At this time, ambient air cap 700 is pushed to the side of ambient air intake element 117, and engagement holes 703a and 703b of ambient air cap 700 are engaged with protruding parts 117a and 117b of ambient air intake element 117. In ambient air joint 710, joint inner circumference part 712 is pressed inside inner circumferential surface 810 of ambient air intake element 117, and joint outer circumference part 711 is sandwiched between ambient air intake element 117 and ambient air cap 700. When the attachment of ambient air cap 700 to ambient air intake element 117 is complete, the attachment of ambient air intake mechanism 510 is complete, and ambient air intake part 130 is completed.

[0263] As illustrated in Figure 37(b), when the attachment of ink supply mechanism 500 and ambient air intake mechanism 510 to supply element 116 and ambient air intake element 117 (each attachment process) is complete, a decompression process in which the inside of frame part 110 (ink reservoir chamber 111) is decompressed is performed. In this embodiment, the decompression of the inside of frame part 110 is performed from the side of ink supply part 120. In the decompression of the inside of frame part 110, suction tube 911 of pressure reducing device 910 is first inserted into supply joint 610 of ink supply mechanism 500and supply valve 620 is pressed by suction tube 911, thus opening the ink flow path. Suction pump (P1) 912 is then activated and the ambient air inside frame part 110 is aspirated. The ambient air inside frame part 110 is aspirated by pressure reducing device 910, and when it reaches a prescribed pressure (pressure that is at least lower than the ambient pressure), suction pump 912 is stopped, and suction tube 911 is removed from ink supply part 120. When suction tube 911 is removed from ink supply part 120, supply valve 620 makes contact with joint contact part 613 of supply joint 610 due to the elastic force of first and second supply springs 630 and 650, and the flow path of the ink is thus blocked, so the decompressed state is maintained.

[0264] As illustrated in Figure 37(c), when the decompression inside frame part 110 is complete after the decompression process, ink dispensing needle 920 is inserted into ink dispensing plug 520, and ink is dispensed into frame part 110 (ink reservoir chamber 111) (ink dispensing process). The inside of ink reservoir chamber 111 is depressurized, so the ink is swiftly dispensed into ink reservoir chamber 111, and when a prescribed amount of ink has been dispensed, dispensing needle 920 is removed and the ink dispensing process is completed. The air pressure inside ink reservoir chamber 111 after ink is dispensed is air pressure p 1 (first pressure). Moreover, "a prescribed amount of ink" refers to the quantity for which liquid surface I of the ink drops below second ambient air communicating hole 435 and third ambient air communicating hole 436 of ambient air communicating passage forming part 430, as illustrated in Figure 37(c). Therefore, when ink is dispensed, the penetration of ink into ambient air connection passage 433 can be avoided. The purpose for not dispensing ink inside ink reservoir chamber 111 until no vacant space is left inside ink reservoir chamber 111 is to, as described above, prevent the damage or deformation of film 160. Moreover, the region below liquid surface I of the ink illustrated in Figure 37(c) is the ink space where ink is stored, and the space above liquid surface I of the ink and the space containing ambient air communicating passage forming part 430 is the ambient air communicating space (decompressed space), but the ink space and the ambient air communicating space change in shape and size depending on the state in which ink cartridge 14 is placed and the amount of remaining ink.

[0265] Ink is dispensed in the state in which the inside of ink reservoir chamber 111 is decompressed by pressure reducing device 910, so even after the dispensing of ink is complete, the air pressure inside ink reservoir chamber 111 is in the decompressed state (air pressure p1). Therefore, there are cases in which a subsequent

decompression process is not required after the ink dispensing process. If a subsequent decompression process were not performed, the manufacturing process could be simplified. However, the air pressure p1 inside ink reservoir chamber 111 after the ink is dispensed is not necessarily within a prescribed range, so in this embodiment, a subsequent decompression process is performed in order to adjust the air pressure to a level within the prescribed range (in order to confirm that the air pressure is within the prescribed range).

[0266] Here, although it is not illustrated in the figures, the subsequent decompression process that is performed after the ink is dispensed will be described. The subsequent decompression process is performed using ink dispensing needle 920, which was inserted into ink dispensing plug 520. In other words, a supply device that supplies ink (not illustrated in the figure) and a pressure reducing device that reduces the pressure by aspirating the ambient air inside frame part 110 (not illustrated in the figure) are connected to ink dispensing needle 920, and once the ink is completely dispensed, the flow path is switched and decompression by the pressure reducing device is begun. The air pressure p3 (third pressure) inside ink reservoir chamber 111 after subsequent decompression is performed is lower than the air pressure p1 inside ink reservoir chamber 111 after the ink is dispensed. Therefore, the quantity of gas inside ink reservoir chamber 111 further decreases as a result of the subsequent decompression process, so the generation of air bubbles inside the ink can be prevented, and the deterioration of printing quality due to air bubbles can be avoided. Moreover, the ink that flows in at the time of the ink dispensing process collides with the inside surface inside ink reservoir chamber 111, so air bubbles are more likely to generate, but the air bubbles generated at this time can be removed. Further, the device may also be configured such that a decompression needle (not illustrated in the figure) for performing subsequent decompression is provided separately from ink dispensing needle 920, and decompression is performed by inserting the decompression needle after removing ink dispensing needle 920.

[0267] As illustrated in Figure 17, in dispensing passage forming part 450, the opening of second dispensing communicating hole 454 is positioned above liquid surface I of the ink (top of Figure 17(a)), so even if subsequent decompression is performed with a pressure reducing device, the ink is never aspirated to the outside through the dispensing path. Therefore, the amount of ink that is dispensed never changes due to subsequent decompression, so it is possible to reliably dispense a prescribed amount of ink.

[0268] Although it is not illustrated in the figures, when the dispensing (or decompression) of the ink is complete, in dispensing plug 520 is pressed until it makes contact with bottom part 451b of dispensing cylinder part 451 (end surface on the side of ink reservoir chamber 111). Therefore, after ink dispensing plug 520 is pressed to bottom part 451b of dispensing cylinder part 451, first dispensing communicating hole 452 is blocked by the outer circumferential surface of ink dispensing plug 520, so even if the dispensing needle is mistakenly inserted once again, the ink is not dispensed. In other words, in the manufacturing process of ink cartridge 14, it is possible to prevent the dispensing process from being performed twice and to prevent the occurrence of defective products.

[0269] As illustrated in Figure 38(a), when the dispensing (or decompression) of the ink is complete, the manufacture of ink reservoir element 110 is complete, so the case 200 is then assembled (case 200 assembly process). Case 200 (first and second case members 210 and 220) is molded by injection-molding, and it is manufactured in advance (third molding process).

[0270] As described above, in the assembly of cover 200, rod members 215a to 215c of first case member 210 are inserted into three through-holes 460a to 460c (see Figure 14 for through-holes 460b and 460c), which are formed on the outer circumference part of frame part 100, and ink reservoir element 110 is thus installed in first case member 210. At this time, ink supply part 120 (supply cap 600) and ambient air intake part 130 (ambient air cap 700) are respectively engaged with case cutout parts 211 and 212, and the outer wall of ink supply part 120 (outer circumferential surface of supply cap 600) and the outer wall of ambient air intake element 130 (outer circumferential surface of ambient air cap 700) make contact with contact grooves 211a and 212a. Second case member 220 is then attached such that case fitting hole parts 225a to 225c (not illustrated in the figure) of second case member 220 engage with rod members 215a to 215c of first case member 210. At this time, ink supply part 120 (supply cap 600) and ambient air intake part 130 (ambient air cap 700) are respectively engaged with case cutout parts 221 and 222 of second case member 220, and the outer wall of ink supply part 120 (outer circumferential surface of supply cap 600) and the outer wall of ambient air intake element 130 (outer circumference of ambient air cap 700) make contact with contact grooves 221 a and 222a.

[0271] As illustrated in Figure 38(b), when the assembly of first and second cases 210 and 220 (assembly process) is complete, first and second case members 210 and 220 are welded to one another (case 200 welding process). In the welding process of first and second case members 210 and 220, first case welded part 216 of first case member 210 and first case welded part 226 of second case member 220 are welded together, and second case welded part 217 of first case member 210 and second case welded part 227 of second case member 220 are welded together (the portions indicated by the diagonal lines in Figure 38(b) are welded). In this embodiment, the entire first and second welded parts 226 and 227 are welded in the case 200 welding process, but several spots may be partially welded instead. In other words, as long as the parts are welded such that case

200 does not peel during transportation and does not easily peel due to human actions, any welding range or welding method may be used.

[0272] In this embodiment, first and second case members 210 and 220 are assembled after the ink is dispensed into ink reservoir element 100, and first and second case members 210 and 220 are then welded, so the vibration due to ultrasonic welding is absorbed by the ink. Therefore, it is possible to reduce situations in which the welded parts of frame part 110 or film 160 are damaged or film 160 peels as a result of vibration accompanying the welding of case 200. Moreover, when the welded parts of first and second case members 210 and 220 are partially welded, the generation of vibration due to ultrasonic welding is reduced, so the damage of each part or the peeling of film 160 can be further reduced.

[0273] As illustrated in Figure 38(b), case projecting parts 214a and 224a (case projecting part 214a is not illustrated in the figure) and case projecting parts 214b and 224b (case projecting part 214b is not illustrated in the figure) project outward from ink supply part 120 and ambient air intake part 130. Therefore, when ink cartridge 14 is to be installed in inkjet recording device 1, even if ink cartridge 14 is dropped, case projecting parts 214a, 214b, 224a, and 224b make impact with the ground, so the damage of ink supply part 120 and ambient air intake part 130 can be prevented. Further, the opening of the ambient air intake path or the ink supply path can also be prevented, so the leakage of ink can be prevented.

[0274] As illustrated in Figure 39(a), when the welding process of case 200 is complete, protector 300 is attached to case 200 (protector 300 attachment process). This protector 300 is removed when ink cartridge 14 is attached to multifunction device 1 (see Figure 1), so it is configured such that it can be freely attached and detached. As described above, protruding parts 330a1 and 330b1 of protector 300 engage with through-holes formed by case projecting cutout parts 214a and 224a (see Figure 8) of first and second case members 210 and 220 and through-holes formed by case projecting cutout parts 214b and 224b of first and second case members 210 and 220, and protector 300 is thus attached to case 200. Because second protector fitting parts 330a and 330b of protector 300 elastically deform in directions facing away from one another, protector 300 can be easily attached and detached.

[0275] As illustrated in Figure 39(b), when the attachment of protector 300 (attachment process) is complete, ink cartridge 14 is housed inside packaging bag 930 in order to ship ink cartridge 14 (housing process). The inside of packaging bag 930 is then decompressed by pressure reducing device 940 (packaging bag 930 packaging space decompression process). Packaging bag 930 is a bag element with one open end (end of the right front side of Figure 39(b)), and in the packaging process, all of the other opened portions excluding opening 931 are ultrasonically welded in a state in which ink cartridge 14 is enclosed. Suction tube 941 of pressure reducing device 940 is inserted through this opening 931, and the ambient air inside of packaging bag 930 is aspirated and reduced by activating suction pump (P2) 942. The air pressure of packaging bag 930 due to this decompression is at a level lower than the ambient pressure, but it is reduced such that it becomes air pressure p2 (second pressure), which is lower than air pressure p3 that is reduced inside ink reservoir chamber 111 (or air pressure p1 when a subsequent decompression process is not performed). When decompression by pressure reducing device 940 is complete, suction tube 941 is removed and opening 931 is welded, resulting in a state in which ink cartridge 14 can be shipped. The relationship between air pressures p1 to p3 is the relationship $p2 < p3 < p1$.

[0276] Because the air pressure inside packaging bag 930 is made lower than the air pressure inside ink reservoir chamber 111 as a result of the packaging space decompression process, film 160 of ink cartridge 14 can be plastically deformed on the side of packaging bag 930 (side of case 200). If the air pressure inside packaging bag 930 is higher than the air pressure inside ink reservoir chamber 111, film 160 sometimes hardens and loses flexibility, , or is damaged in the state in which the inside of ink reservoir chamber 111 is decompressed when ink cartridge 14 is left without being used for a long period of time. When film 160 loses flexibility, the shape of ink reservoir chamber 111 do not change, and the air pressure becomes nonuniform, so ink cannot be accurately supplied. Moreover, when film 160 is damaged, the ink inside ink reservoir chamber 111 flows to the outside of ink cartridge 14. However, in this embodiment, the inside of packaging bag 930 is decompressed such that the air pressure is lower than the air pressure inside ink reservoir chamber 111, so film 160 is can be deformed on the side of packaging bag 930 (revertible). Therefore, even in cases in which it is not used for long periods of time, it is possible to reduce situations in which it becomes impossible to accurately supply ink due to the solidification of film 160, and it is possible to prevent the damage of film 160.

[0277] Because the air pressure inside of packaging bag 930 is made lower than the air pressure inside ink reservoir chamber 111, gas that remains inside ink reservoir chamber 111 (there is a slight amount of gas that remains due to the subsequent decompression process implemented previously) can be gradually moved outside ink reservoir chamber 111. This is because, as described above, film 160 is formed from nylon polyethylene, which is relatively gas permeable, so the air pressure of the space inside ink reservoir chamber 111 and the air pressure of the space inside packaging bag 930 and outside ink reservoir chamber 111 attempt to transition to the equilibrium state, and the gas therefore moves to the outside from inside ink reservoir chamber 111. Accordingly, the deaeration of the ink stored in ink reservoir chamber 111 is promoted, and it becomes more difficult for air bubbles to generate, so the printing quality can be favorably maintained.

[0278] In this embodiment, ink cartridge 14 is packaged in packaging bag 930 and decompressed in the state in which protector 300 is attached to case 200, so it never makes direct contact with ambient air intake part 130 (or ink supply part 120) as packaging bag 930 deforms due to decompression. Valve open part 721a projects to the outside of ambient air intake part 130, so if packaging bag 930 makes direct contact with valve open part 721a, valve open part 721a operates and the ambient air intake path is sometimes opened. If the ambient air intake path is opened, the ink inside ink reservoir chamber 111 leaks out. Moreover, ambient air intake part 130 and ink supply part 120 are sometimes damaged in step with the deformation of packaging bag 930. However, in this embodiment, protector 300 is attached to case 200, so the damage of ambient air intake part 130 and ink supply part 120 can be prevented, and the opening of the ambient air intake path can be prevented.

[0279] As described above, ink cartridge 14 is manufactured in a process in which case 200 is welded over ink reservoir element 100 after ink is dispensed inside ink reservoir chamber 111 of frame part 110. With some conventional ink cartridges, ink was dispensed from outside the case after the ink reservoir element was covered with the case (after the assembly of the ink cartridge is completely finished). With such a conventional ink cartridge, it was necessary to prepare a frame and a case according to the amount of ink stored and the color of the ink. However, in this embodiment, case 200 is covered after ink is dispensed into ink reservoir chamber 111 of ink reservoir element 100, so common parts can be used for ink reservoir element 100. In other words, even if the shape of the case differs, ink reservoir element 100 can be commonly used. As a result, the manufacturing cost of ink cartridge 14 can be reduced.

[0280] Moreover, in ink cartridge 14, ink dispensing part 150 (ink dispensing plug 520) is completely concealed by case 200 such that it cannot be seen from the outside, so problems in which ink spills outside as a result of the user accidentally removing ink dispensing plug 520 can be prevented.

[0281] Next, the installation method of ink cartridge 14 into multifunction device I will be described with reference to Figure 40. Figure 40 is a diagram that shows the method in which ink cartridge 14 is installed into multifunction device 1.

[0282] When ink cartridge 14 is to be attached to multifunction device 1, packaging bag 930 is first broken, and ink cartridge 14 is removed from the inside of packaging bag 930. Then protector 300 is removed from case 200. The direction in which each ink cartridge 14 (for color, for black, and for large-capacity black) is installed into multifunction device 1 is the same.

[0283] First, the internal structure of refill unit 13 of multifunction device 1 will be described with reference to Figure 40(a). In refill unit 13, as described above, needle 49 is provided at a lower portion of the side of back surface 56 of case 40, and needle 49 projects along installation direction F (arrow F in Figure 40(a)) of ink cartridge 14. As is clear from Figure 40(c), this installation direction F is parallel to the longitudinal direction (direction of arrow B; X-direction) of ink cartridge 14, which is installed into refill unit 13. Remaining ink detection sensor 57 is provided above needle 49. Remaining ink detection sensor 57 is roughly formed into a left-facing horseshoe shape, and the open end of the horseshoe shape is light emitting part 57a, which emits light, while the other end is light receiving part 57b (not illustrated in the figure), which receives light. This light emitting part 57a and light receiving part 57b are respectively inserted into through-holes formed by case cutout parts 213 and 223 and detection part 140, and are attached such that they project from back surface 56. Remaining ink detection sensor 57 is configured such that it does not output (or outputs) a signal to a control unit provided on multifunction device 1 when light receiving part 57b receives light that is emitted from light emitting part 57a and outputs (or does not output) a signal to the control device when light that is emitted from light emitting part 57a is blocked and is not received by light receiving part 57b.

[0284] As illustrated in Figure 40(a), when ink cartridge 14 (in the state in which protector 300 is removed) is to be installed in multifunction device 1, ink cartridge 14 is installed such that ink supply part 120 is located below ambient air intake part 130. This state is the regular installation position (or first position) of ink cartridge 14.

[0285] Moreover, in the state in which ink cartridge 14 is installed in multifunction device 1, ink supply part 120, detection part 140, and ambient air intake part 130 are sequentially arranged from bottom to top, and ink supply part 120, detection part 140, and ambient air intake part 130 are formed on a single end surface. As is clear from Figure 40(b), this single end surface is the one side surface of case 200 positioned in the front in installation direction F when ink cartridge 14 is in the regular installation position. Therefore, because ink supply part 120, detection part 140, and ambient air intake part 130 are provided such that they are focused (located close to each other) on a single end surface, remaining ink detection sensor 57, needle 49, and passage 54, which are required on the side of multifunction device 1, can be consolidated (located close to each other) onto a single surface (back surface 56). If ink supply part 120 were provided on the bottom surface of ink cartridge 14 and detection part 140 and ambient air intake part 130 were provided on the side surface of ink cartridge 14, it would become necessary to establish needle 49 on the bottom surface side of case 40 of refill unit 13 and establish remaining ink detection sensor 57 and passage 54 on the side of the side surface (back surface 56) of case 40, and the scale of multifunction device 1 would increase as these were provided, being diversified (located relatively far away from each other). However, in this embodiment, these parts are consolidated (located close to each other), so the scale of multifunction device 1 can be reduced.

[0286] Ink supply part 120 and detection part 140 are

sequentially provided on the single end surface from top to bottom, and by usingsensor arm 470 for detecting remaining ink, the full use of the ink can be improved. This is due to the following reasons.

[0287] When the amount of remaining ink is detected by irradiating a portion of the ink cartridge (corresponding to detection part 140 in this embodiment) using a photodetector (corresponding to remaining ink detection sensor 57 in this embodiment), if a method in which the presence of ink is detected directly (method for detecting the amount of remaining ink based on whether or not ink is present in the light path of the photodetector) were used, the ink could not be fully used with a configuration in which the ink supply opening (corresponding to ink supply part 120 in this embodiment) and the irradiated part that is irradiated by photodetector (detection part 140) are both provided on a single end surface, as in this embodiment. In other words, with a configuration in which the irradiated part is positioned below the ink supply opening, the position of the ink supply opening becomes relatively high, so ink that is stored below the ink supply opening is left over, and the consumption efficiency thus diminishes. With a configuration in which the irradiated part is positioned above the ink supply opening, the position of the irradiated part becomes relatively high, so a significant quantity of ink is left over when the photodetector detects the absence of ink, and when the user is notified of the absence of ink based on the detection results of the photodetector, the amount of ink that is left over becomes large. However, in this embodiment, sensor arm 470 is used, so even if the irradiated part is provided in a relatively high position, the absence of ink can be detected in step with the timing in which the actual amount of remaining ink becomes low, and the ink supply opening is provided in a low position, so there is little leftover ink. (The description is given out of place, but a remaining ink detection method using sensor arm 470 will be described in detail below.)

[0288] As long as the configuration of the ink cartridge is such that the ink supply opening is provided on the bottom surface of the ink cartridge and the irradiated part is provided on the side surface of the ink cartridge, ink will be fully used even if a method that directly detects the presence of ink is used. However, in this case, there is the separate problem that multifunction device 1 increases in size. In other words, only with the invention described in this embodiment can both the reduction of the scale of multifunction device 1 and the improvement of the full use of ink be realized.

[0289] As described in Figure 40(a), ink cartridge 14 is installed in a process in which case protruding parts 214a and 224a (first case welded parts 216 and 226) of case 200 are inserted to slide on door main body 60, and the back surface of ink cartridge 14 is pushed in installation direction F until most of ink cartridge 14 is inserted into refill unit 13. Moreover, as described above, sloping surfaces 214a2 and 224a2 are formed on case projecting parts 214a and 224a, so ink cartridge 14 can be smoothly inserted due to these sloping surfaces 214a2 and 224a2. As illustrated in Figure 40(a), a portion of the back surface of ink cartridge 14 is push part 200a, and this is a part that is pushed such that it makes contact with pressing retaining member 61.

[0290] As illustrated in Figure 40(b), when ink cartridge 14 is in the state in which it is pushed inside refill unit 13 in installation direction F, protrusion 55 is fitted into a groove formed by case protruding grooves 214b2 and 224b2. Further, the tip of needle 49 is positioned inside supply cap 600 of ink supply part 120. The movement of ink cartridge 14 in the horizontal direction (direction toward the back from the front side of Figure 40(b)) is restricted by protrusion 55 and protruding grooves 214b2 and 224b2, and the movement in the vertical direction is restricted by bottom plate part 42 and ceiling plate part 44 of refill unit 13, so it is possible to prevent ink cartridge 14 from being inserted diagonally and prevent remaining ink detection sensor 57 and needle 49 from being damaged.

[0291] When the door member 60 is rotated from the state of Figure 40 (b) in the direction of the arrow illustrated in Figure 40 (b), the pushing retaining member 61 of the door member 60 contacts the push part 200a forming a portion of the back surface of the ink cartridge 14, pushing the ink cartridge 14 in the installation direction F. As the door member 60 is rotated further, the door lock member 62 of the door member 60 fits into the lock member fitting part 46 of the refill unit 13, completing the installation of the ink cartridge 14 (the state of Figure 40 (c)). The middle point p illustrated in Figure 40 (c) is the central position in the vertical direction (height direction) of the ink cartridge 14. The position where the pushing retaining member 61 pushes the push part 200a is a position including the middle point p of the ink cartridge 14 and extending below the middle point p. In other words, the push part 200a is provided at a position above the ink supply part 120 and below the ambient air intake part 130 in the vertical direction. Although illustration and description of this will be omitted, when the state of Figure 40 (c) is reached, the tip of the swing arm mechanism 44b fits into the latch parts 217a and 227a and retains the ink cartridge 14.

[0292] Once installation of the ink cartridge 14 is completed, the needle 49 is inserted into the ink supply part 120 and ink supply is enabled; the valve opening part 721a of the ambient air intake part 130 contacts the back surface 56 of the case 40, enabling intake of ambient air; and the remaining ink detection sensor 57 is inserted through the through-hole formed by the case cutout parts 213 and 223 and the detection part 140, enabling detection of the remaining quantity of ink. The details of this will be described later.

[0293] Furthermore, since the remaining ink sensor 57 is inserted through the through-hole formed by the case cutout parts 213 and 223 and the detection part 140 when the ink cartridge 14 is installed in the refill unit 13, the light emitting part 57a and the light receiving part 57b of

the remaining ink detection sensor 57 become positioned inside the case 200. Thus, it becomes possible to prevent damage to the remaining ink detection sensor 57, as well as preventing misdetection due to dirt, dust or the like adhering to the light emitting part 57a and light receiving part 57b.

[0294] Furthermore, since the pushing retaining member 61 is impelled by the coil spring 66 as described above, it can stably retain the ink cartridge 14. When the ink cartridge 14 has been installed (or is being installed) in the refill unit 13, the elastic force of the spring members 630, 650, 730 and 750 of the ink supply mechanism 500 and the ambient air intake mechanism 510 act in the direction away from the side on which needle 49 is arranged (leftward in Figure 40; in the direction opposite to the installation direction). As described above, the pushing retaining member 61 is configured to have a greater elastic force than the elastic force generated by the spring members 630, 650, 730 and 750, and is thus able to stably retain the ink cartridge 14 once it has been installed. Furthermore, the push part 200a that is depressed by the pushing retaining member 61 is located substantially in the middle between the ink supply part 120 and the ambient air intake part 130, allowing a substantially uniform elastic force to be applied to the ink supply part 120 and the ambient air intake part 130. This is because the ink cartridge 14 is retained at three points in the installation direction of the ink cartridge 14 - one point at the front of the refill unit 13 (the pushing retaining member 61) and two points at the back of the refill unit 13 (the ink supply part 120 and the ambient air intake part 130), with the imaginary line linking these three points forming substantially an isosceles triangle shape. Thus, retaining the ink cartridge 14 by three points allows the ink cartridge 14 to be retained stably. Furthermore, since the elastic force of the pushing retaining member 61 is used to retain the ink cartridge 14, the load on the surface of the ink cartridge 14 decreases as compared to the case of a mechanical structure where the ink cartridge 14 is secured by engagement with its surface. Thus, it becomes possible to prevent damage to the ink cartridge 14 through excessive loads being applied thereto.

[0295] Furthermore, since the pushing retaining member 61 pushes below the middle position (midpoint p) in the height direction of the ink cartridge 14, a large force is not needed to operate the door member 60, making it possible to stably retain the ink cartridge 14 at a prescribed position. The pivot of rotation of the door member 60 is located at a lower portion of the case 40, and the user performs the operation of opening and closing the door member by manipulating the edge part of the door member 60. Thus, if the push part 200a is arranged at the upper part of the back surface of the ink cartridge 14, the point of action at which the pushing retaining member 61 pushes the ink cartridge 14 will be at a distance from the pivot of rotation of the door member 60, thus requiring a large force for the user to close the door member. On the other hand, if the push part 200a is arranged at the extreme lower part of the back surface, for instance below the ink supply part 120, the user will be able to close the door member with minimum force, but since a point at the lower part of the ink cartridge 14 is pushed, the ink cartridge 14 may sometimes rotate and be pushed in tilted, so the needle 49 may not be inserted accurately into the ink supply part 120. However, according to the present embodiment, since the push part 200a is arranged below the middle position of the ink cartridge 14 in the height direction and above the position corresponding to the ink supply part 120, a large force is not required to operate the door member, making it possible to stably install the ink cartridge at the prescribed location.

[0296] Here, referring to Figure 41, the operation of the ink supply mechanism 500 and the ambient air intake mechanism 510 when the ink cartridge 14 is installed in the multifunction device 1 will be described. Figure 41 is a drawing illustrating the state with the ink cartridge 14 having been installed in the multifunction device 1. Since Figure 41 is drawing for the purpose of explaining the operation of the ink supply mechanism 500 and ambient air intake mechanism 510, the case 200, the protrusion 55 of the multifunction device 1 and the like have been omitted from the drawing.

[0297] As illustrated in Figure 41, when the ink cartridge 14 is installed in the multifunction device 1 (inside the refill unit 13), the light emitting part 57a and the light receiving part 57b (not illustrated) of the remaining ink detection sensor 57 are arranged at positions sandwiching the detection part 140. The detection part 140 consists of translucent or transparent resin material, allowing the light emitted from the light emitting part 57a of the remaining ink detection sensor 57 to pass through the detection part 140 and be received by the light receiving part 57b. Since the shielding arm part 473c of the sensor arm 470 is arranged in the enclosure part 141 of the detection part 140, as described above, the remaining ink quantity can be detected by the operation of this sensor arm 470. The operation of this sensor arm will be described later.

[0298] With regard to the ink supply mechanism 500, when the ink cartridge 14 is installed in the multifunction device 1, the needle 49 is inserted through the space surrounded by the sloping wall 606d of the supply cap 600, the insertion hole 605 of the supply cap 600 and the ink flow path 615 of the supply joint 600 in that order, and the tip of the needle 49 contacts the valve bottom wall 621 of the supply valve 620, depressing the supply valve 620. As a result, the supply valve 620 moves away from the joint contact part 613 of the supply joint 610, forming an ink flow path. The needle 49 communicates with a discharge opening (not illustrated) of the multifunction device 1 via ink extraction opening 52 and ink tube 53. Furthermore, in the tip of the needle 49, a cutout 49a is formed for securing an ink flow path, so that an ink flow path is secured by the cutout 49a even if the tip of the needle 49 contacts the valve bottom wall 621 of the sup-

ply valve 620.

[0299] Here, the operation of the ink supply mechanism 500 when the supply valve 620 is depressed by the needle 49 will be described. The first supply spring 630 housed inside the supply valve 620 (and supply slider 640), as described above, has a slightly flexed spring flexible part 633. On the other hand, there is no flexing in the spring flexible part 653 of the second supply spring 650 arranged on the opposite side of the supply slider 640 from the first supply spring 630. This serves to determine the flexing order of the first and second supply springs 630 and 650. In other words, the first supply spring 630 with the flexed spring flexible part 633 flexes more easily than the second supply spring 650, so that when the needle 49 is inserted, the first supply spring 630 flexes first, and the second supply spring 650 flexes thereafter.

[0300] Here, the height of the ink supply mechanism 500 in the direction of axis O1 comprises dimensional error from the manufacturing of the various components, so the more components there are, the more likely that dimensional error will occur. However, since the supply slider 640 is brought into contact with the valve hook part 626 of the valve member 610, at least the error in the dimensions of the first supply spring 630 becomes irrelevant. Thus, dimensional error of the ink supply mechanism 500 is reduced and the telescoping operation of the ink supply mechanism 500 becomes more stable.

[0301] Furthermore, the inside diameter of the valve outer circumferential wall 622 of the supply valve 620 and the outside diameter of the slider outer circumferential wall 641 of the supply slider 640 are formed to be substantially equal. Thus, it becomes possible to prevent the occurrence of misalignment in the direction of displacement when the supply slider 640 operates in the direction of axis O1 of the ink supply mechanism 500. Furthermore, the inside diameter of the slider outer circumferential wall 641 and the outside diameter of the spring bottom parts 631 and 651 of the first and second supply springs 630 and 650 are formed to be substantially equal. Thus, it becomes possible to reduce misalignment in the direction orthogonal to axis O1 (the up-down direction in Figure 41) when the first and second spring members 630 and 650 are arranged on the slider pedestal part 644 of the supply slider 640. Furthermore, while the external shape of the valve outer circumferential wall 622 of the supply valve 620 is formed slightly smaller than the inside diameter of the ink supply element 116, since the valve protruding part 622a is formed outward from the valve outer circumferential wall 622 of the supply valve 620, it becomes possible to prevent misalignment in the direction of displacement when the supply valve 620 operates in the direction of axis O1. Therefore, telescoping operation in the direction of axis O1 becomes more stable.

[0302] Furthermore, when the valve bottom wall 621 of the supply valve 620 is depressed by the needle 49 and moves in the direction of valve seat 660 (rightward in Figure 41), accompanying this movement, the first supply spring 630 is flexibly deformed so as to become compressed, whereupon the supply slider 640 moves in the direction of valve seat 660 (the direction opposite to the impelling direction of the first supply spring 630 and second supply spring 650), and the second supply spring undergoes flexible deformation. This state is the state illustrated in Figure 41.

[0303] Once the ink cartridge 14 has been installed in the case 40 of the multifunction device 1, the first and second supply springs 630 and 650 also undergo elastic deformation, forming an ink flow path K indicated by arrow K. The ink flow path K is a flow path formed between the ink reservoir chamber 111 (see Figure 14), second supply communicating hole 423, first supply communicating hole 421, first cover through-hole 683 (and second cover through-hole 684) of cover 680, first valve seat through-hole 662b and second valve seat through-hole 663 of valve seat 660, valve seat communicating groove 664 of valve seat 660, ink flow path 654 of second supply spring 650, slider through-hole 645 of supply slider 640, ink flow path 634 of first supply spring member 630, first spring member 930 and valve bearing part 628, and is a flow path which leads successively through the ink flow path 627 of supply valve 620, cutout 49a of needle 49 and the inside of needle 49. The space between the valve outer circumferential wall 622 of the supply valve 620 and the inner circumferential surface of the ink supply member 116 is also an ink flow path.

[0304] Here, the operation of the supply joint 610 when the needle 49 is inserted inside the supply joint 610 will be described. When the needle 49 is press-fitted into the protruding part flow path 615b through the step part flow path 615a, the joint protruding part 614 is pulled by the needle 49 due to the friction between its own inner circumferential surface 614a and the outer circumferential surface of the needle 49 and is displaced in the direction of insertion (to the right in Figure 41) of the needle 49 (displaced into the contact part flow path 615c). Here, the joint contact part 613 has a structure cut out into a countersunk shape, so the displacement of the joint protruding part 614 in the direction of insertion of the needle 49 is not transmitted directly to the tip 613a of the joint contact part 613. In other words, the tip 613a of the joint contact part 613 is hardly displaced in the direction of insertion, but is slightly displaced in a direction away from the needle 49. Thus, the shape change of the supply joint 610 accompanying insertion of the needle 49 is such that the joint contact parts 613 are displaced away from each other. Assuming the joint contact part 613 had a shape with a gently sloping surface going from the inner circumferential surface 614a of the joint protruding part 614 to the tip 613a of the joint contact part 613, as the needle 49 was inserted, the joint protruding part 614 would deform so as to be displaced in the direction of insertion of the needle 49, the deformation of the joint protruding part 614 would be directly transmitted to the joint contact part 613, and the joint contact part 613 would be displaced in

the direction of insertion together with the joint protruding part 614. As a result, the insertion stroke of the needle 49 for forming an ink flow path between the supply valve 620 and the joint contact part 613 would become longer, so the needle 49 would have to be made longer. Furthermore, as the needle 49 becomes longer, it becomes more likely to be damaged by contact with other members, and the length of the ink supply mechanism 500 in the direction of axis O1 becomes longer, thus increasing its size. However, in the present embodiment, since the joint contact part 613 is displaced in a direction substantially orthogonal to the direction of insertion of the needle 49, the stroke for forming an ink flow path does not need to be made long. Thus, it becomes possible to reduce contact of the needle 49 with other members, reducing damage as well as reducing the size increase of the ink supply mechanism 500.

[0305] When the ink cartridge 14 is removed form the multifunction device 1, the needle 49 is withdrawn, whereupon the valve bottom wall 621 of the supply valve 620 contacts the joint contact part 613, obstructing the ink flow path K. Here, the second supply spring 650 becomes fully stretched, while the first supply string 630 returns to a slightly flexed deformed state.

[0306] When the ink cartridge 14 is removed form the multifunction device 1, as the needle 49 is withdrawn, the ink present in the vicinity of the ink flow path 615 of the supply joint 610 (the contact part flow path 615c and the protruding part flow path 615b) flows toward the ink cap 600 (leftward in Figure 41) and flows out into the step part flow path 615a. However, since the quantity of ink which flows out into the step part flow path 615a is minute, the ink is retained by the capillary force of the step part of the step part flow path 615a, so that its outflow to the outside of the ink cartridge 14 can be reduced. Furthermore, even if it flows out from the step part flow path 615a, since the opening part of the ink storage part 602 of the supply cap 600 is wider than the opening 612c of the step part flow path 615a, the ink flowing out flows into the ink storing part 607 of the ink supply cap 600. Therefore, it becomes possible to reliably prevent ink from flowing out of the ink cartridge 14.

[0307] Next, the ambient air intake mechanism 510 side will be described. In the ambient air intake mechanism 510, when the ink cartridge 14 is installed in the multifunction device 1, the valve opening part 721a of the ambient air valve 720 contacts the back surface 56 of the case 40, depressing the ambient air valve 720. As a result, the ambient air valve 720 is moved away from the joint contact part 713 of the ambient air joint 710, forming an ambient air intake path L as illustrated by arrow L in the drawings. Furthermore, when the valve opening part 721a of the ambient air valve 720 contacts and is depressed by the back surface 56, the joint stroke part 714 of the ambient air joint 710 contacts the back surface 56, and the joint skirt part 714 undergoes flexible deformation so as to expand (or contract) in diameter. As a result, it becomes tightly held against the back surface 56, blocking the outside and inside of the joint skirt part 714. In the back surface 56 on the inside of the joint skirt part 714, there is formed a passage 54 which serves as a passage for taking in ambient air, which is admitted into the ink reservoir chamber 111 via this passage 54.

[0308] The operation of the ambient air intake mechanism 510 when the ambient air valve 720 is depressed will be described. The first ambient air spring 730 housed inside the ambient air valve 720 (and the ambient air slider 740), as described above, has a slightly flexed spring flexible part 733, while there is no flexing in the spring flexible part 753 of the second ambient air spring 750. Thus, the flexing order is determined for the first and second ambient air springs 730 and 750 as well.

[0309] Furthermore, the inside diameter of the valve outer circumferential wall 722 of the ambient air valve 720 and the inside diameter of the slider outer circumferential wall 741 of the ambient air valve 720 are formed to be substantially equal. Thus, the occurrence of misalignment in the direction of displacement when the ambient air slider 740 operates in the direction of axis 02 of the ambient air intake mechanism 510 can be prevented. Furthermore, the inside diameter of the slider outer circumferential wall 741 and the outside diameters of the spring bottom parts 731 and 751 of the first and second ambient air spring members 730 and 750 are formed to be substantially equal. Thus, it becomes possible to prevent misalignment in the direction orthogonal to axis 02 (the up-down direction in Figure 41) when the first and second ambient air springs 730 and 750 are arranged on the slider pedestal part 744 of the ambient air slider 740.

[0310] Furthermore, while the outside shape of the valve outer circumferential wall 722 of the ambient air valve 720 is formed slightly smaller than the inside diameter of the ambient air intake element 117, since valve protruding part 722a is formed outward from the valve outer circumferential wall 722 of the ambient air valve 720, misalignment in the direction of displacement when the ambient air valve 720 operates in the direction of axis 02 can be prevented. Therefore, telescoping operation in the direction of axis 02 of the ambient air intake mechanism 510 is stabilized.

[0311] Furthermore, when the ambient air valve 720 is depressed by the valve opening part 721a and moves in the direction of protruding part 811 (rightward in Figure 41), along with the movement, the first ambient air spring 730 undergoes flexible deformation so as to become compressed, and when the ambient air valve 720 is depressed, the ambient air slider 740 moves in the direction of protruding part 811 and the second ambient air spring 750 undergoes flexible deformation. This state is the state illustrated in Figure 41.

[0312] When the ink cartridge 14 is installed in the case 40 of the multifunction device 1, the first and second ambient air springs 730 and 750 also undergo elastic deformation, forming an ambient air intake path L illustrated by arrow L. The ambient air intake path L is a flow path

passing successively through the path formed between the joint passage 715 of the ambient air joint 710, the ink flow path 727 of the ambient air valve 720, the first ambient air spring 730 and the valve bearing part 728; the path formed between the ink flow path 734 of the first ambient air spring 730, the slider through-hole 745 of the ambient air slider 740, the ink flow path 754 of the second ambient air spring 750, the spring top part 752 of the second ambient air spring 750 and the protruding part 811; and the first ambient air communicating hole 434. This flow path is the main flow path through which the majority of the ambient air flows. Furthermore, the space between the valve outer circumferential wall 722 of the ambient air valve 720 and the inner circumferential surface 810 of the ambient air intake element 117 also forms part of the ambient air intake path. Subsequently, as illustrated in Figure 16, ambient air passes through the first ambient air communicating chamber 431, communicating opening 433a, ambient air connection passage 433, communicating opening 433b, second ambient air communicating chamber 432, second ambient air communicating hole 435 and third ambient air communicating hole 436, and is admitted inside the ink reservoir chamber 111. When the ambient air intake path L is opened, air is taken in such that the inside of the ink reservoir chamber 111 is brought to ambient air pressure.

[0313] As described above, the ink flow path K and the ambient air intake path L are formed when the ink cartridge 14 is installed in the multifunction device 1. Furthermore, the operation of the ink supply mechanism 500 and the ambient air intake mechanism 510 is such that they operate smoothly and without misalignment relative to the axes O1 and 02. Thus, installation of the ink cartridge 14 is made easier, while allowing the supply of ink and the intake of ambient air to be carried out reliably.

[0314] Next, referring to Figure 42 and Figure 43, the method of detecting the quantity of ink remaining in the ink reservoir chamber 111 will be described. Figure 42 is a drawing illustrating the operation of the sensor arm 470 according to the quantity of ink remaining in the ink reservoir chamber 111. Figure 42 (a) illustrates the state with remaining ink, while Figure 42 (b) illustrates the state with no remaining ink (ink empty). Figure 43 is a drawing schematically illustrating the operating principle of the sensor arm 470.

[0315] The direction of rotation of the sensor arm 470 is determined by the combined force of the buoyancies and the gravities acting on the right side portion (on the side of the shielding arm part 473c) and the left side (on the side of the balance part 471). However, in order to simplify the explanation, the description will now be made assuming that all of the forces, which are exerted on the sensor arm 470, act on the balance part 471. That is, in this description, the buoyancies and the gravities, which act on the portions of the sensor arm 470 other than the balance part 471, are neglected. Instead, it is considered that the buoyancies and the gravities, which are received by the entire sensor arm 470, act on the balance part 471. On this assumption, the rotation of the sensor arm 470 is determined by the buoyancy and the gravity acting on the balance part 471. As illustrated in Figure 42 (a), in the state where a large amount of ink is stored in the ink reservoir chamber 111 (in the state where the ink stored is at least above the level of the lower ends of the inner circumference welded parts 415a, 415b, 416a and 416b), since the balance part 471 of the sensor arm 470 is formed from resin material with lower specific gravity than the specific gravity of the ink, the buoyancy generated on the balance part 471 increases, and the balance part 471 floats in the ink. When the balance part 471 is inside the ink, as illustrated in Figure 42 (a), the combined force of the gravity and buoyancy generated on the balance part 471 cause a rotating force to be received in the clockwise direction (the direction of arrow G1 in Figure 43), but the shielding arm part 473c comes into contact with the arm supporting part 143 which rises from the bottom wall 141a of the detection part 140 (enclosure part 141) and is thus placed in a position blocking the optical path between the light emitting part 57a and the light receiving part 57b of the remaining ink detection sensor 57. This is the state when ink is present, whereby the controller (not illustrated) of the multifunction device 1 discriminates the presence of ink.

[0316] As the ink inside the ink reservoir chamber 111 passes through the ink flow path K and decreases in quantity, the liquid surface I of the ink drops. As the liquid surface I of the ink drops, the blocking arm part 473c emerges on the liquid surface I of the ink, and subsequently, the balance part 471 also emerges on the liquid surface I of the ink. When the balance part 471 emerges on the liquid surface I of the ink, the buoyancy generated on the balance part 471, which causes the sensor arm 470 to rotate in the clockwise direction (the direction of arrow G1 in Figure 43) and the gravity generated on the balance part 471, which causes the sensor arm 470 to rotate in the counterclockwise direction (the direction of arrow G2 in Figure 43) balance each other out, so the overall combined force is balanced. Subsequently, as the liquid surface I of the ink drops further, the balance part 471 moves downward following the liquid surface I, so the sensor arm 470 rotates counterclockwise. This rotating operation causes the shielding arm part 473c to move upward away from the arm supporting part 143, and an optical path is created between the light emitting part 57a and light receiving part 57 of the remaining ink detection sensor 57. This state is the out-of-ink state, in which the controller (not illustrated) of the multifunction device 1 discriminates that the ink cartridge is out of ink.

[0317] In the foregoing description, as illustrated in Figure 42 (b), the balance part 471 is positioned near the bottom part 400b1 (see Figure 15) of the ink reservoir chamber 111 when almost no ink remains. Thus, when the quantity of ink remaining in the ink reservoir chamber 111 has become low, an out-of-ink discrimination can be correctly made.

[0318] As illustrated in Figure 42 (b), in the out-of-ink

state, there is still some ink left inside the ink reservoir chamber 111. The ink surface I at this time is slightly higher than the part 400b1 forming the bottom of the ink reservoir chamber 111. Furthermore, as discussed above, the ink reservoir chamber 111 and the ink supply part 120 communicate via the ink supply chamber 426 (see Figure 15) delimited by the supply partition wall 422, and the ink reservoir chamber 111 and the ink supply chamber 426 communicate via the second supply communicating hole 423 positioned below the bottom part 400b1 provided on the supply partition wall 422. When the liquid surface I of the ink becomes lower than the second supply communicating hole 423, ambient air enters the area inside the supply partition wall 422, making it impossible to supply ink. Thus, in the present embodiment, to detect the state immediately before ink supply becomes impossible as "ink empty", the sensor arm 470 is designed to rotate so that the out-of-ink state is detected when the liquid surface I of the ink is above the second supply communicating hole 423. In this way, positioning the second supply communicating hole 423 below the part 400b1 1 forming the bottom part of the ink reservoir chamber 111, it becomes possible to reliably prevent ink from running out before ink empty is detected. Furthermore, when an out-of-ink state is discriminated, there is hardly any ink on the bottom part 400b1 of the ink reservoir chamber 111, with ink remaining only inside the concave part space 424a, which is a relatively narrow space formed at a location below the bottom part 400b1 in the ink reservoir chamber 111, so that the quantity of unused ink remaining when an out-of-ink state is detected is extremely small, eliminating waste.

[0319] Once the out-of-ink discrimination has been made, to indicate to the user that the device is out of ink, the out-of-ink lamp is illuminated or audio is used to inform the user that the device is out of ink. It is also possible to use a counter provided in the controller to remember the number of times ink has been discharged and to detect the quantity of ink remaining by additionally employing a software counter which hypothetically determines that the device is out of ink.

[0320] As illustrated in Figure 42 (a) and Figure 42 (b), the attachment position of the attachment shaft 472a of the sensor arm 470 and of the arm sandwiching part 425 of the frame part 110, i.e. the position of the center (pivot) about which the sensor arm 470 rotates, is arranged below the detection part 140 and above the ink supply part 120, and is positioned to the rear (to the left in Figure 42 (a) and Figure 42 (b)) of the supply path forming part 420 in the direction of installation of the ink cartridge 14. In the present embodiment, the ink supply part 120, ambient air intake part 130 and detection part 140 are arranged together on one side surface of the ink cartridge 14. This allows the various mechanisms (ink supply mechanism, ambient air intake mechanism and remaining ink detection mechanism) to be arranged together on the refill unit 13 of the multifunction device 1, preventing the shape of the refill unit 13 from becoming complicated, and also reducing its size. Furthermore, the ink supply part 120, being a part which supplies ink by causing it to flow out to the multifunction device 1, is preferably arranged at the lower side of the ink cartridge 14 so as to provide for more complete utilization of the ink, while the ambient air intake part 130, being a part which takes in ambient air into the ink cartridge 14, is preferably arranged at the upper side of the ink cartridge 14. Thus, from the standpoint of space efficiency, the detection part 140 is preferably arranged between the ink supply part 120 and the ambient air intake part 130. In the ink cartridge 14 of the present embodiment configured in this manner, if the position of the center of rotation of the sensor arm 470 is arranged above (or at the same position as) the detection part 140, the length of the space between the balance part 417 and the attachment part 472 will become greater and the sensor arm 470 will become larger, and the storable quantity of ink will decline accordingly. On the other hand, if the position of the center of rotation of the sensor arm 470 is arranged below the ink supply part 120, the movable range of the balance part 471 will become extremely small, making detection of ink-empty difficult. Thus, in the present embodiment, the position of the center of rotation of the sensor arm 470 (the "pivot" consisting of the attachment part 472) is arranged above the ink supply part 120 and below the detection part 140. Consequently, as described above, ink-empty is reliably detected and reduction of the ink reservoir capacity due to increased size of the sensor arm 470 is avoided.

[0321] Furthermore, in the ink cartridge 14 of the present embodiment, if the balance part 471 is arranged in the vicinity of the supply partition wall 422, the balance part 471 will be near the second supply communicating hole 423 and the vibration caused by operation of the balance part 471 will be transmitted to the ink, interfering with ink flow. In particular, if the liquid surface I of the ink becomes wavy, ambient air may enter inside the supply partition wall 422 through the second supply communicating hole 423, hindering the supply of ink. Conversely, placing the balance part 471 extremely far from the supply partition wall 422 will make the arm part 473 larger, so the balance part 471 will also have to become larger to ensure buoyancy of the balance part 471. Consequently, the amount of ink, which can be stored in the ink reservoir chamber 111, will decrease. Thus, in the present embodiment, the position of the center of rotation of the sensor arm 470 is placed in the vicinity of the supply partition wall 422 and the balance part 471 is positioned at the middle of the ink reservoir chamber 111 in the Y direction, avoiding the aforementioned enlargement of the sensor arm and adverse effects on ink flow.

[0322] When the sensor arm 470 is attached to the arm sandwiching part 425 and when ink is available, as illustrated in Figure 42 (a), the top end surface of the shielding arm part 473c (the upper end surface in Figure 42) is positioned substantially parallel to the liquid surface of the ink. In this state, when the liquid surface of the ink drops and reaches the same position as the top end sur-

face of the shielding arm 473c, the surface tension of the ink acts as a force to retain the shielding arm 473. If the force by which the surface tension of the ink retains the shielding arm 473c is greater than the buoyancy of the balance part 473a, the sensor arm 470 will not operate properly.

[0323] Thus, in the present embodiment, the top end surface forming the outside of the detection part 140 of the shielding arm 473c is given an angle so as to slope downward, reducing the portion of the shielding arm 473c that is substantially parallel to the liquid surface of the ink. Thus, the force exerted by the surface tension of the ink on the shielding arm 473c can be reduced, allowing the sensor arm 470 to operate normally.

[0324] Here, referring to Figure 44, the case where the ink cartridge 14 is installed in a wrong orientation will be discussed. Figure 44 is a cross-sectional view illustrating the state where the ink cartridge 14 is installed in the multifunction device 1 in a wrong orientation.

[0325] As illustrated in Figure 44, when the ink cartridge 14 is inserted into the case, if the top and bottom are reversed relative to the proper installation orientation, the tips of the case protruding parts 214a and 224a will collide with the tip of the protrusion 55. When installed with the top and bottom reversed from the proper installation orientation, the ink supply part 120 will be located above the ambient air intake part 130, resulting in an incorrect orientation (or a second orientation) with respect to the proper installation orientation.

[0326] As illustrated in Figure 44, the total projection distance t9 including the projection distance of the protrusion 55 from the back surface 56 of the case 40 and the projection distance of the case protruding parts 214a and 224a from the case 200 is longer than the projection distance t8 of the needle 49 from the needle forming member 48. Providing a difference between projection distance t8 and projection distance t9 prevents contact between the tip of the valve opening part 721a projecting outward from the ambient air intake part 130 and the tip of the needle 49. The needle 49 is a member for extracting the ink inside the ink cartridge 14 and supplying the ink to the ink jet recording head (not illustrated), so if there are cases where needle 49 is damaged or deformed, ink is not accurately supplied and printing is not performed accurately. Thus, it is not desirable for the needle 49 to be damaged or deformed by collision of the needle 49 and the valve opening part 721a. However, by providing a difference between projection distance t8 and projection distance t9, as described above, collision between the needle 49 and the valve opening part 721a can be prevented, thus making it possible to prevent damage or deformation of the needle 49 and allowing the ink to be reliably supplied.

[0327] Furthermore, the position of the through-hole (detection window) formed by the detected part 140 and the case cutouts 213 and 223 in the vertical direction (the up-down direction in Figure 44) is displaced slightly from the center, so that when the ink cartridge 14 is installed upside-down from the proper installation orientation, the remaining ink detection sensor 57 may collide with the outer wall of the case 200, which may damage the remaining ink detection sensor 57. However, since a difference is provided between projection distance t8 and projection distance t9, it becomes possible to prevent damage to the remaining ink detection sensor 57 due to collision with the outer wall of the case 200, making it possible to accurately detect the remaining quantity of ink.

[0328] Next, referring to Figure 45, the method of removing the ink cartridge 14 from the installed state in multifunction device 1 will be described. Figure 45 is a drawing illustrating the method of removing the ink cartridge 14 from the multifunction device 1.

[0329] As illustrated in Figure 45 (a), to remove the ink cartridge 14 from the multifunction device 1 (refill unit 13), the lock release lever 63 of the door 41 is rotated forward (to the left in Figure 45 (a)) (rotated in the direction of the arrow in Figure 45 (a)). As discussed above, when the lock release lever 63 is rotated, the engagement between the door lock member 62 and the lock member fitting part 46 is disengaged, and as a result, the door 41 can be rotated forward.

[0330] A portion of the curved part 65b of the pullout member 65 of the door 41 is arranged inside the concave parts 216a and 226a (concave part 226a is to the rear in Figure 45 (a) and is thus not illustrated) of case 200, so when rotated by the lock release lever 63, the tip of the curved part 65b of the pullout member 65 of door 41 contacts the latch parts 216b and 226b (latch part 226b is to the rear in Figure 45 (b) and is thus not illustrated) of the case 200 (the state of Figure 45 (b)). When the door 41 is rotated further forward (in the direction of the arrow in Figure 45 (b)) from the state of Figure 45 (b), the latch parts 216b and 226b of the case 200 are pulled out by the curved part 65b of the pullout member 65, and a portion of the ink cartridge 14 projects from inside the case 40 as a result (the state of Figure 45 (c)). From this state, the user can easily remove the ink cartridge 14. Thus, the operability of the ink cartridge 14 replacement operation is improved.

[0331] Here, referring to Figure 46, the mechanism for preventing dripping of ink when the ink cartridge 14 is removed from the multifunction device 1 will be described. Figure 46 is a drawing showing the state of removing the ink cartridge 14 from the multifunction device 1 and a front view of the ink cartridge 14. Figure 46 (a) and Figure 46 (b) are drawings illustrating the state change when the ink cartridge 14 is removed, and Figure 46 (c) shows a front view of the ink cartridge 14.

[0332] As discussed above, when the ink cartridge 14 is installed in the multifunction device 1, the needle 49 is inserted inside the ink supply part 120. The ink supply mechanism 500 includes a valve mechanism impelled by a first supply spring 630 and a second supply spring 650, so when removing the ink cartridge 14 from the multifunction device 1 (when going from the state of Figure

46 (a) to the state of Figure 46 (b)), ink may adhere to the protruding tip of the needle 49, or in the worst case, ink may flow out from the ink supply part 120. Since the valve 620 moves in the direction such that it contacts with the joint contact part 613 due to the impelling force of the first supply spring 630 and the second supply spring 650 when the needle 49 is removed from the supply joint 610, ink is pushed out in the direction such that it flows out from the protruding part flow path 615b to the step part flow path 615a, so some ink may stick to the protruding tip 49 of the needle or flow outside the ink supply part 120. Consequently, when the ink cartridge 14 is removed, the ink adhering to the tip of the needle 49 may drip down in the form of ink drops, or ink may flow down from the ink supply part 120.

[0333] However, in the present embodiment, as illustrated in Figure 46 (b), since the projection (first protruding part) consisting of the case projecting parts 214a and 224a projects further outward (rightward in Figure 46 (b)) than the projecting tip of the ink supply part 120, even if the ink adhering to the tip of the needle 49 drips down in the form of ink drops or if ink flows down from the ink supply part 120, the dripped ink can be made to adhere to the ink supply part 120 side surface of the case projecting parts 214a and 224a. Furthermore, since the case projecting parts 214a and 224a and the ink supply part 120 are positioned relatively close to each other, it is easy to make the ink dripping from the ink supply part 120 adhere to the case projecting parts 214a and 224a.

[0334] As illustrated in Figure 46 (c), the insertion hole 605 of the supply cap 600 is an ink supply opening into which the needle 49 is inserted and through which ink flows out, and the thickness t11 in the widthwise direction (the left-right direction of Figure 46 (c); the Z direction) of ink cartridge 14 of the case projecting parts 214a and 224a is made longer than the diameter t10 of the insertion hole 605. (The diameter of needle 49 is formed to be slightly narrower than the diameter t10 of the through-hole 605.) Furthermore, viewed vertically (form the Y direction), the insertion hole 605 is accommodated entirely within the region occupied by the case projecting parts 214a and 224a. Thus, when the ink cartridge 14 is removed, even if ink adhering to the tip of the needle 49 drips down or if ink flows down from the insertion hole 605, the dripped ink can be caught by the case projecting parts 214a and 224a. Furthermore, since the case projecting parts 214a and 224a project horizontally (in the left-right direction of Figure 46 (a) and (b)) in the installation orientation of ink cartridge 14, and the surface on the ink supply part 120 side is formed to be substantially flat, the ink adhering to the case projecting parts 214a and 224a can be prevented from dripping further down. As a result, it is possible to prevent ink from dripping down into and dirtying the inside of the refill unit 13. If the inside of the refill unit 13 is dirtied, the ink cartridge 14 may be dirtied during installation or removal of the cartridge 14, thus making the user's hands dirty. However, such problems can be avoided by preventing the ink from adhering to the inside of the refill unit 13 as much as possible.

[0335] While the configuration described above is desirable for prevention of dirtying, the configuration is not limited thereto, so long as, as illustrated in Figure 46 (c), the case projecting parts 214a and 224a are at least partially located over the line passing through the center of communicating hole 605 (line p in Figure 46 (c); the line passing through the center of the opening 600a of the supply cap 600) in the vertical direction of ink cartridge 14 (the up-down direction in Figure 46 (c)). This is because much of the ink dripping down from the ink supply part 120 and needle 49 will be able to take a downward path along line p. Therefore, even if the length of the case projecting parts 214a and 224a in the widthwise direction of the ink cartridge 14 is made shorter than the length t10 in the widthwise direction of the insertion hole 605, a configuration of this sort can contribute to the prevention of dirtying of the refill unit 13. In this case, the ink retaining force of the case projecting parts 214a and 224a is weakened, so it can be assumed that ink which has been caught by the case projecting parts 214a and 224a may drip down into the refill unit 13. However, the ink cartridge 14 to be replaced is hardly ever left for a long time inside the refill unit 13 in a state with the tip of the needle 49 having been withdrawn from the ink supply part 120, being rather removed quickly from the refill unit 13, so such a problem is unlikely to occur. Incidentally, even when the case projecting parts 214a and 224a are formed to be narrow, if the ink cartridge 14 is installed in the wrong orientation, it will collide with the tip of the protrusion 55, preventing incorrect installation. Furthermore, even if the case projecting parts 214a and 224a are not accurately positioned on line p, so long as they are position vertically below the ink supply part 120, they will be able to catch the ink dripping down from the ink supply part 120 to some extent, making it possible to prevent dirtying of the inside of the refill unit 13 to a greater extent than if the case projecting parts 214a and 224a were not provided.

[0336] Next, referring to Figure 47, the structure, which reduces the adhesion of ink to the detection surfaces 140a and 140b of the detection unit 140 of the ink cartridge 14, will be described. Figure 47 is a drawing illustrating the structure, which reduces the adhesion of ink to the detection surfaces 140a and 140b of the detection unit 140 of the ink cartridge 14. Figure 47 (a) illustrates the state of installing or removing the ink cartridge 14 in/from the refill unit 13 (multifunction device 1); Figure 47 (b) is a drawing which illustrates the surface where the detection part 140 of the ink cartridge 14 is formed; and Figure 47 (c) is a perspective view of ink cartridge 14. The ink cartridge 14 of Figure 47 (a) is illustrated in simplified fashion without showing the detailed structure, as this figure serves to illustrate the outer shape of the ink cartridge 14 and its positional relationship to the detection part 140.

[0337] As illustrated in Figure 47 (a), when the ink cartridge 14 is installed in or removed from the refill unit 13,

ink may spatter from the projecting tip of the ink supply part 120 or the projecting tip of the needle 49. This is due to the fact that the ink supply mechanism 500 of the ink supply part 120 opens and closes with the help of the elastic force of the first and second supply springs 630 and 650, and thus the pressure of the ink changes rapidly upon installation and removal of the ink cartridge 14, causing the ink held inside the ink supply mechanism 500 to fly out forcefully, and the fact that when the needle 49 is suddenly exposed to the outside from the state of being positioned inside the ink supply part 120 (from the state where the ink cartridge 14 is installed), the ink may flow back and spatter. Now, the spattering of ink does not occur every time the ink cartridge 14 is installed or removed, and most of the time no ink may spatter.

[0338] Furthermore, as illustrated in Figure 47 (a), when the ink cartridge 14 is in the installation orientation, the detection part 140 is positioned at a position corresponding to the remaining ink detection sensor 57, so the detection part 140 is positioned above the ink supply part 120 (or needle 49). The majority of the ink spattering from the needle 49 and ink supply part 120 spatters downward (opposite to the direction of detection part 140) under its own weight, so the adhesion of ink to the detection part 140 can be reduced simply by arranging the detection part 140 above the ink supply part 120. Furthermore, the detection surfaces 140a and 140b are formed in a plane parallel to the line jointing the center of the detection part 140 and the cap insertion hole 605 (see Figure 47 (b)). The majority of the ink spattering from the cap insertion hole 605 spatters in substantially linear fashion, so even if ink should spatter from the cap insertion hole 605, not much ink will adhere to the detection surfaces 140a and 140b, making it possible to reduce the adhesion of ink to the detection surfaces 140a and 140b.

[0339] Furthermore, as illustrated in Figure 47 (b), if the ink cartridge 14 is removed during use and placed such that the positional relationship of the ink supply part 120 and ambient air intake part 130 is upside down relative to the installation orientation of the ink cartridge 14 (the orientation of Figure 47 (a)), ink may drip down from the insertion hole 605 of the supply cap 600 of the ink supply part 120. Since the ink dripping form the insertion hole 605 flows under its own weight, it will flow out in substantially linear fashion in the direction of the detection part 140 and adhere to the detection surfaces 140a and 140b of the detection part 140.

[0340] However, when the detection part 140 is in a state arranged below the ambient air intake part 130 and above the ink supply part 120 (the state of Figure 47 (b)), the detection surfaces 140a and 140b of the detection part 140 will be arranged vertically (the up-down direction with reference to the direction of the symbol in Figure 47 (b)), so the ink adhering to the detection surfaces 140a and 140b will drip down to the ambient air intake part 130 side under its own weight. Furthermore, since the surface of the detection surfaces 140a and 140b is formed out of a resin material into a smooth plane, adhering ink can flow down easily. Thus, it becomes possible to reduce the adhesion of ink to the side surface of detection part 140. Furthermore, when the ink cartridge 14 is installed, the ink supply part 120 is located at the lower part and the ambient air intake part 130 is located at the upper part (the orientation of Figure 47 (a)), so even if there is ink adhering to the detection part 140 during installation or removal of the ink cartridge 14, the ink will flow to the ink supply part 120 side, making it possible to reduce the adhesion of ink to the detection surfaces 140a and 140b. Moreover, as discussed above, the edge part 40 of the detection surfaces 140a and 140b and the side surface 100a of the frame part 110 is formed substantially as a right angle, so ink adhering to the detection surfaces 140a and 140b can more easily flow downward due to the effect of the capillary force of the edge part 140c. Therefore, adhesion of ink to the detection surfaces 140a and 140b can be reduced.

[0341] Furthermore, as illustrated in Figure 47 (c), the detection part 140 is arranged inside the case 200 and a space into which the light emitting part 57a and light receiving part 57b of the remaining ink detection sensor 57 enter is formed on both sides of the detection surfaces 140a and 140b by the case cutouts 213 and 223. Thus, the detection part 140 is covered by the case 200, so even if ink should spatter, adhesion of the spattered ink to the detection surfaces 140a and 140b can be reduced. Moreover, since a portion of the ink supply part 120 projects outward from the case 200, in the installation orientation of ink cartridge 14 (the state of Figure 47 (a)), the distance to the detection part 140 becomes farther. Thus, the majority of the spattered ink does not reach the detection part 140, making it possible to reduce the adhesion of ink to the detection surfaces 140a and 140b. Furthermore, the case projecting parts 214a and 224a and the case projecting parts 214b and 224b are formed at the ends, the ink supply part 120 and ambient air intake part 130 are located between the case projecting parts 214a and 224a and the case projecting parts 214b and 224b, and the case projecting parts 214a and 224a and the case projecting parts 214b and 224b extend further outward than the ink supply part 120. Thus, if the ink cartridge 14 is inadvertently dropped, the ink supply part 120 can be prevented from contacting the surface, which the ink cartridge 14 is dropped on, making it possible to reduce outflow of ink from the ink supply part 120 due to the shock of contact. As a result, the adhesion of the ink to the detection surfaces 140a and 140b can be reduced.

[0342] Next, referring to Figure 48 and Figure 49, the case 40 (see Figure 2) of the refill unit 13 will be described. Figure 48 is a drawing showing the front view of the case 40. Figure 48 (a) is a front view of case 40, which can accommodate large capacity black or a black ink cartridges 14 and color ink cartridges 14, and Figure 48 (b) is a front view of case 2040, which can accommodate black ink cartridges 14 and color ink cartridges 14. In the present embodiment, case 40 is arranged in the multi-function device 1, but it is also possible to provide a mul-

tifunction device 1 wherein case 2040 is arranged instead of case 40. Figure 49 is a cross-sectional view showing the simplified cross-section of cases 40 and 2040.

[0343] Figure 49 (a) is a simplified cross-sectional view of case 40 along line XXXXIXa-XXXXIXa of Figure 48 (a), and Figure 49 (b) is a simplified cross-sectional view of case 2040 along line XXXXIXb-XXXXIXb of Figure 48 (b). Figure 49 shows a cross-section of needle forming member 48 and ink cartridge 14, with the other elements making up the cases 40 and 2040 being omitted from the illustration. Furthermore, in Figures 48 to 50, a color ink cartridge is illustrated as ink cartridge 14c, a black ink cartridge is show as ink cartridge 14k1, and a large capacity black ink cartridge is illustrated as ink cartridge 14k2.

[0344] As illustrated in Figure 48 (a), case 40 is configured to accommodate four ink cartridges so that they are aligned in case 40. Regarding the arrangement of the four ink cartridges, three color ink cartridges 14c are arranged side by side, and a large capacity black ink cartridge 14k2 or a black ink cartridge 14k1 is arranged adjacent thereto. In other words, the large capacity black ink cartridge 14k2 or the black ink cartridge 14k1 is selectively accommodated at an end position in the direction of alignment of the ink cartridges (the left-right direction in Figure 48 (a)). The case 40 illustrated in Figure 48 (a) accommodates a large capacity black ink cartridge 14k2.

[0345] As illustrated in Figure 48 (b), case 2040 is configured to accommodate four arranged ink cartridges. Regarding the arrangement of the four ink cartridges, three color ink cartridges 14c are arranged side by side, and a black ink cartridge 14k1 is arranged adjacent thereto. In other words, just as in case 40, the black ink cartridge 14k1 is accommodated at an end position in the direction of alignment of the ink cartridges (the left-right direction in Figure 48 (b)).

[0346] Since case 40 allows both a large capacity black ink cartridge 14k2 and a black ink cartridge 14k1 to be installed, it is formed to accommodate the thickness of the large capacity black ink cartridge 14k2. Thus, the lateral width t14 (the width in the direction of alignment of the ink cartridges 14c and 14k2; the left-right direction in Figure 48 (a)) of case 40 is longer than the lateral width t15 (the width in the direction of alignment of the ink cartridges 14c and 14k1; the left-right direction in Figure 48 (b)). The difference between the lateral width t14 of case 40 and the lateral width t15 of case 2040 corresponds to the difference between the height of the vertical wall parts 220b to 220e of the second case member 220 illustrated in Figure 11 and the height of the vertical wall parts 2220b to 2220e of the second case member 2220 illustrated in Figure 13.

[0347] Furthermore, case 40 allows a black ink cartridge 14k1 or a large capacity black ink cartridge 14k2 to be installed selectively, while case 2040 only allows installation of black ink cartridge 14k1. This implies providing users with two types of multifunction device 1. As already discussed above, since users whose frequency of text printing is low do not need a large capacity black ink cartridge 14k2, it is preferable to provide such users with a smaller multifunction device 1 that does not allow installation of a large capacity black ink cartridge 14k2. Furthermore, since case 2040 for installing black ink cartridges 14k1 and case 40 for installing large capacity black ink cartridge 14k2 differ only slightly in external shape, the majority of the die used can be shared between the two, providing for a cost reduction.

[0348] As illustrated in Figure 49 (a), when the ink cartridges 14c and 14k2 are accommodated in case 40, a needle 49 penetrates into the ink supply mechanism 500 of each of the ink cartridges 14c and 14k2. The gaps t16 between the needles 49 penetrating the color ink cartridges 14c are equal, while the gap t17 between the needle 49 penetrating into the large capacity black ink cartridge 14k2 and the needle 49 penetrating the adjacent color ink cartridge 14c is formed to have a longer distance than gap t16. The difference between gap t16 and gap t17 corresponds to the difference between the height of the vertical wall parts 210b to 210e of the first case member 210 illustrated in Figure 8 and the height of the vertical wall parts 2210b to 2210e of the first case member 2210 illustrated in Figure 13.

[0349] As illustrated in Figure 49 (b), when the ink cartridges 14c and 14k1 are accommodated inside the case 2040, a needle 49 penetrates inside the ink supply mechanism 500 of each of the ink cartridges 14c and 14k1. The gap t16 between needles 49 penetrating into color ink cartridges 14c and the gap t17 between the needle 49 penetrating into the black ink cartridge 14k1 and the needle 49 penetrating into the adjacent color ink cartridge 14c are of the same length as gaps t16 and t17 of case 40. This is because the state of accommodation (accommodation orientation) of the black ink cartridge 14k1 in case 2040 involves arranging the first case member 1210 of the black ink cartridge 14k1 on the color ink cartridge 14c side, thereby making the distance between the needle 49 penetrating into the black ink cartridge 14k1 and the needle 49 penetrating into the adjacent color ink cartridge 14c the same as the distance between the needle 49 penetrating into the large capacity black ink cartridge 14k2 of case 40 and the needle 49 penetrating into the adjacent color ink cartridge 14c. In other words, this is because the position of the ink supply part 120 of the ink cartridge 14k1 and the position of the ink supply part 120 of ink cartridge 14k2 are the same relative to the position of the ink supply part 120 of the ink cartridge 14c. As a result, identical needle forming members 48 can be provided in case 40 and case 2040 even through the lateral widths t14 and t15 of cases 40 and 2040 may differ, making the needle forming member 48 a common component and making it possible to reduce costs when fabricating two cases - case 40 and case 2040.

[0350] Furthermore, as discussed above, the ink supply mechanism 500 is a valve mechanism impelled by the first supply spring 630 and second supply spring 650,

so when the ink cartridge 14 is removed from the multifunction device 1, ink may flow out from the ink supply part 120 or, in the worst case, ink may spatter around. The needles 49 are arranged continuously, without any partition plates being provided between the needles 49, so when ink spatters from the ink supply part 120, the spattered ink ends up adhering to the adjacent needles 49. The needles 49 are parts, which supply ink to the multifunction device 1, so when a different ink color is mixed into a needle 49, color change will occur during printing and printing quality will decline. In the present embodiment, the black ink is a pigment type ink, while the color inks consist of dye type inks. This is because black ink is used primarily for text printing, and is thus made from a pigment type ink with low permeability into paper in order to make the edges of the characters clear, while color ink is used primarily for image printing, so it is made from a dye type ink with high permeability into paper in order to make the granularity of dots less apparent and improve the appearance of the coloration. Although there is little effect of color change when color inks are mixed together, when black ink mixes with another color ink, the effect of color change becomes greater, so it is not desirable for black ink to be mixed with other color inks. Furthermore, when mixing with other ink colors has been confirmed, generally, recovery processing (purging) involving forced ejection of the ink is carried out, but since ink is wasted for the recovery processing, the ink utilization efficiency drops. Moreover, since black ink is a pigment type ink, it has higher viscosity compared to dye type ink, so it cannot be easily removed even if recovery processing is carried out. However, in the present embodiment, the ink cartridges 14k1 and 14k2 holding black ink are arranged at the end in the direction of arrangement in the case 40, and the ink supply part 120 (and needle 49) are shifted away from the color ink cartridges 14c, so even if black ink should spatter, the spattered ink would be unlikely to adhere to the adjacent needle 49. Therefore, decline in printing quality can be suppressed, as can the wasting of large amounts of ink for recovery processing.

[0351] Next, referring to Figure 50, the state of installation of the large capacity black ink cartridge 14k2 or black ink cartridge 14k1 and color ink cartridges 14c in case 40 will be described. Figure 50 is a simplified cross-section illustrating in simplified fashion the state of installation of ink cartridges 14c, 14k1 and 14k2 inside case 40. Figure 50 (a) illustrates the state of ink cartridges 14k1 and 14c installed in case 40 and Figure 50 (b) illustrates the state of ink cartridges 14k2 and 14c installed in case 40.

[0352] As illustrated in Figure 50 (a), in the bottom plate part 42 and ceiling plate part 44 of the refill unit 13 (case 40), there are formed accommodating grooves 42c1 to 42c4 and 44c1 to 44c4 capable respectively of accommodating the case welded parts 216, 226 and 1216 and the case welded parts 217, 227 and 1217 of case 200 or case 1200. Accommodating grooves 42c1 to 42c4 and 44c to 44c4 are all formed to the same shape.

[0353] Furthermore, the space between accommodating grooves 42c1 and 42c2 and the space between accommodating grooves 42c2 and 42c3 provide a separation distance t12, while the space between accommodating grooves 42c3 and 42c4 provides a separation distance t13 longer than distance t12. This is because, as discussed above, the black ink cartridge 14k1 is formed with a larger outer shape than the other color ink cartridges 14c, so the ink supply part 120 and ambient air intake part 130 of the black ink cartridge 14k1 are at a position shifted by the difference between distance t12 and distance t13 in the direction away from the ink supply part 120 and ambient air intake part 130 of the other color ink cartridges 14c (the left-right direction in Figure 50). The difference between distance t12 and distance t13 is the same as the difference between gap t16 and gap t17 between needles 49 described above, and corresponds to the difference between the higher of verticals wall parts 210b to 210e of the first case member 210 illustrated in Figure 8 and the height of vertical wall parts 2210b to 2210e of the first case member 2210 illustrated in Figure 13, or the difference between vertical wall parts 210b to 210e of the first case member 210 illustrated in Figure 8 and the vertical wall parts 1210b to 1210e of the first case member 1210 illustrated in Figure 11.

[0354] Furthermore, a prescribed space X is formed between the outer surface of the second case 220 of the black ink cartridge 14k1 and the inner surface of the side plate part 43. This prescribed space X is formed to allow for the large capacity black ink cartridge 14k2. Namely, as illustrated in Figure 50 (b), it serves to allow the refill unit 13 to be used for both the black ink cartridge 14k1 and the large capacity black ink cartridge 14k2.

[0355] As illustrated in Figure 50 (b), when a large capacity black ink cartridge 14k2 is installed in the refill unit 13, the space that would be formed when a black ink cartridge 14k1 is installed becomes occupied. Furthermore, the positions of the ink supply part 120 and ambient air intake part 130 are the same when ink cartridge 14k1 is installed and when ink cartridge 14k2 is installed. Thus, the same case 40 can be used with black ink cartridges 14k1 and 14k2, making it possible to reduce fabrication costs.

[0356] Next, referring to Figure 51, the combination of components making up cases 200, 1200 and 2200 will be described. Figure 51 is a schematic drawing, which schematically illustrates the combination of case members 210, 220, 1210, 2210 and 2220. Figure 51 (a) is a schematic drawing of case 200. According to the present embodiment, case 200 comprises first and second case members 210 and 220, with the thicknesses of the first and second case members 210 and 220 (the height of vertical wall parts 210b to 210e and 220b to 220e of the first and second case members 210 and 220; the left-right direction in Figure 51(a)) being respectively t18.

[0357] Figure 51 (b) is a schematic drawing of case 2200. Case 2200 comprises first and second case mem-

bers 2210 and 2220, with the thicknesses of the first and second case members 2210 and 2220 (the height of vertical wall parts 2210b to 2210e and 2220b to 2220e of the first and second case members 2210 and 2220; the left-right direction in Figure 51(b)) being respectively t19, which is approximately twice the thickness of t18.

[0358] Figure 51 (c) is a schematic drawing of case 1200. Case 1200 comprises first and second case members 1210 and 220, with the thicknesses of the first and second case members 1210 and 220 (the height of vertical wall parts 1210b to 1210e and 220b to 220e of the first and second case members 1210 and 220; the left-right direction in Figure 51 (c)) being t19 for the first case member 1210 and t18 for the second case member 220.

[0359] Thus, according to the present embodiment, three types of cases - 200, 1200 and 2200 - with different sizes of the outer shape (different inside volumes) are formed from two first case members of different thickness and two second case members of different thickness. In the present embodiment, the thicknesses of the first and second case members 210 and 220 forming case 200 are equal, and the thicknesses of the first and second case members 2110 and 2220 forming case 2200 are also equal, but making the thicknesses equal in this manner is not an indispensable condition for forming three types of cases - 200, 1200 and 2200 - of different outer shape sizes.

[0360] Namely, so long as the thickness of one side (the first case member 2210) of the case members making up the largest first ink cartridge (case 2200) is greater than the thickness of one side (the first case member 210) of the case members making up the smaller third ink cartridge (case 200), and the thickness of the other side (the second case member 2220) of the case members making up the largest first ink cartridge is greater than the thickness of the other side (the second case member 220) of the case members making up the smaller third ink cartridge, three types of cases with different outer shape sizes can be fabricated from four case members. The conditions described above will be referred to as the first conditions. By adding further conditions to these first conditions, four types of cases can be fabricated from four case members. This will be described in detail later.

[0361] Cases 200, 1200 and 2200 consist of resin material and are manufactured by injection molding. Thus, a die corresponding to each case 200, 1200 and 2200 is necessary, with six types of dies being necessary if dies are fabricated for all the cases. Namely, since cases 200, 1200 and 2200 have a space inside them, at least two members are necessary to construct each of them, for instance, a vessel main body open on one surface and a lid member, which closes that opening. Thus, with three cases 200, 1200 and 2200 of different size, six types of members are necessary.

[0362] However, since dies are expensive, it is desirable to share them as much as possible. In the present embodiment, the second case member 220 for black is made common with the second case member 220 for color. Thus, a special die is not necessary for the second case member 220 for black, providing a reduction in costs. Moreover, the first case member 1210 for black merely involves making the first case member 210 for color deeper and providing a rib 1218. Thus, the tip side of the vertical wall parts 1210b to 1210e past the rib 1218 in the first case member 1210 used for black has the same shape as the tip side of the vertical wall parts 210b to 210e of the first case member 210 used for color. Therefore, the first case members 1210 and 210 can be manufactured by using a common die for the main portion of the first case members 1201 and 210, and changing between a member corresponding to the first case member 210 and a member corresponding to the first case member 1210. Thus, costs can be reduced as compared to when two types of molds are fabricated. Furthermore, since the first case member 2210 for large capacity black has the same shape as the first case member 1210 for black but without the rib 1218, a common die can be used for the main portion of the first case members 210, 1201 and 2210. In this way, even when there are multiple types of ink cartridges 144c, 14k1 and 14k2, a cost reduction can be achieved by using common dies as much as possible.

[0363] Furthermore, in cases 200, 1200 and 2200 of different size from each other, if the through-holes that allow the ink supply part 120 and ambient air intake part 130 to project to the outside are made the same shape, and substantially semi-circular case cutout parts 211, 212, 221, 222, 1211, 1212, 2211, 2212, 2221 and 2222 corresponding to one half of these through-holes are formed in the same substantially semi-circular shape in the first case member 210, second case member 220, first case member 1210 for black, first case member 2210 for large capacity black and second case member 2220 for large capacity black, a partially common structure can be used for each of the dies, reducing the costs of designing the dies.

[0364] In the present embodiment, case 1200 was made from the second case member 220 of case 200 and a first case member 1210 formed to substantially the same shape as the first case member of case 2200. However, as illustrated in Figure 51 (d), it is also possible to fashion a case 1200α from the first case member 210 of case 200 and a second case member 1220 formed to substantially the same shape as the second case member of case 2200. Since the vertical wall parts 210b to 210e and 220b to 220e of case members 210 and 220 are formed to be substantially equal in height, and since the vertical wall parts 210b to 210e and 220b to 220e of case members 2210 and 2220 are formed to be substantially equal in height, the outside shape sizes of the case 1200a and case 1200 are substantially the same.

[0365] Furthermore, it is possible to simply create a case consisting of a combination of first case member 210 and second case member 2220 or a case consisting of a combination of first case member 2210 and second case member 220 as the case for black. In other words,

so long as the combination of case members allows three cases to be created - a small case for color, a large case for lager capacity black and a medium sized case for black - any sort of combination may be used.

[0366] Next, referring to Figure 52, a second embodiment will be described. Figure 52 is a drawing illustrating the ink cartridge 3014 and refill unit 3013 of the second embodiment. Figure 52 (a) is a drawing illustrating the side surface of the ink cartridge 3014 of the second embodiment, and Figure 52 (b) shows the cross-section in the state with the ink cartridge 3014 installed in refill unit 3013.

[0367] As illustrated in Figure 52 (a), the ink cartridge 3014 of the second embodiment is configured with a different location of the ambient air intake part 130 as compared to the ink cartridge 14 of the first embodiment. In the ink cartridge 3014 of the second embodiment, ambient air is taken into the ink cartridge 3014 through an ambient air intake passage 3131 formed in a labyrinth shape going from a through-hole 3130 formed on the top surface of the case 3200.

[0368] As illustrated in Figure 52 (b), the refill unit 3013 of the second embodiment is configured with the position of the pushing retaining member 3061 provided on the door 41 being lower than the position of the pushing retaining member 61 provided on the door 41 of the first embodiment. This is because there is no air intake part on the side surface opposite the pushing retaining member 3061 of the ink cartridge 3014 of the second embodiment, and thus the elastic force acting when the ink cartridge 3014 is installed in the refill unit 3013 (the elastic force due to the first supply spring 630 and second supply spring 650) acts only on the lower part of the ink cartridge 3014. Thus, in order to stably install the ink cartridge 3014 inside the refill unit 3013, the pushing retaining member 3061 and the ink supply part 120 are configured to be substantially on the same line in the horizontal direction (the left-right direction in Figure 52 (b)). Being positioned substantially on the same line, the direction in which the elastic force acts is also substantially on the same line, reducing tilting of the ink cartridge 3014 and allowing it to be stably installed.

[0369] The ink cartridge 3014 of the second embodiment may comprise an ink reservoir element 100 inside it, or may be configured such that ink is stored inside the case 3200.

[0370] Next, referring to Figure 53, the third and fourth embodiments will be described. Figure 53 is a perspective view illustrating the outward appearance of the ink cartridges 4014 and 5014 of the third and fourth embodiments. Figure 53 (a) is a perspective view illustrating the outward appearance of ink cartridge 4014 of the third embodiment, and Figure 53 (b) is a perspective view illustrating the outward appearance of ink cartridge 5014 of the fourth embodiment.

[0371] As illustrated in Figure 53 (a), the ink cartridge 4014 of the third embodiment has a through-hole 4130 for admitting ambient air into the ink cartridge 4014 formed in a portion of its top surface (the top surface in Figure 53 (a)). The air admitted through this through-hole 4130 passes through a labyrinth shaped air intake passage 4131 (a relatively long passage with a small inside diameter) and is admitted inside the ink cartridge 4014. A seal member 4132 is glued to the ink cartridge 4014 to prevent deaeration and outflow of the ink inside the ink cartridge 4014 before use. To use the ink cartridge 4014, the seal member 4132 is peeled off, and then the cartridge is installed in the multifunction device 1.

[0372] The detection part 4140 (irradiated part) is formed projecting outward from one end surface extending substantially in the vertical direction of the ink cartridge 4014 (the up-down direction in Figure 53 (a)), and below that is formed the ink supply part 4120. An ink supply opening 4121 into which needle 49 is inserted is formed on the projecting tip of the ink supply part 4120. The ink cartridge 4014 of the third embodiment does not have a structure corresponding to ink reservoir element 100, and stores the ink directly inside the case.

[0373] On the right side of Figure 53(a), there is a cross-sectional diagram of the double dashed line within the figure. As illustrated in this figure, within the ink supply part 4120, there is a joint 4122 that forms the insertion part into which the needle 49 is inserted, a valve 4123 which fills the opening of the joint 4122 and which is arranged in the direction on the inner side of the ink cartridge 4014 of this joint 4122, and a spring component 4124 which biases this valve 4123 in the direction of joint 4122. As a result, the valve mechanism that opens and closed the ink supply port 4121 is formed. Also, the partition wall 4125 that divides the inner side of the ink cartridge 4014 and the ink supply part 4120 is formed as a single unit with the ink cartridge 4014 itself. As illustrated in Figure 53(a), this partition wall 4125 forms a space to store the valve mechanism.

[0374] As illustrated in Figure 53(b), the ink cartridge 5014 in the fourth example of embodiment is used in lieu of the ink supply part 4120 in the third example of embodiment, forming the ink supply part 120 of the first example of embodiment and the similarly shaped ink supply part 5120. The remaining structure is the same as the ink cartridge in the third example of embodiment, and therefore, the detailed explanation of this will be omitted.

[0375] The detection part 4140 of the third and fourth examples of embodiment can contain the sensor arm 470 inside it, as in the first example of embodiment. If it contains the sensor arm 470, then in the state where the ink cartridges 4014 and 5014 have been attached to the multifunction device 1, it is possible to accurately detect the amount of ink remaining. Also, in the third and fourth examples of embodiment, the protrusion (first protrusion part) formed from the case protruding parts 214a and 224b and the protrusion (first protrusion part) formed from the case protruding parts 214b and 224b have been omitted, but it is acceptable to include these.

[0376] Next, the fifth example of embodiment will be described while referring to Figures 54 and 55. Figure 54

is an angled view of the case 200 of the ink cartridge 14 in the fifth example of embodiment, and Figure 55 is a cross-sectional diagram showing the state in which the ink cartridge 14 of the fifth example of embodiment has been attached within the refill unit 13. The case 200 of the fifth example of embodiment is constructed such that its edge shape will be different in relation to the case protruding parts 214a and 224a of the first example of embodiment. Therefore, the structure other than the edge part of the case protruding parts 214a and 224a of the fifth example of embodiment is the same as that of the ink cartridge 14 of the first example of embodiment, and using the same references for the parts that are identical to the first example of embodiment, the explanation of these will be omitted.

[0377] The case 200 of the fifth example of embodiment forms the second protruding parts 214a3 and 224a3 which protrude in the direction of the case protruding parts 214b and 224b (the left direction in Figure 54) towards the case protruding parts 214a and 214b. By forming these second protruding parts 214a3 and 224a3, the case protruding parts 214a and 214b will form the truncated L (or V or U) shaped step 214a4 and 224a4 (concave part) as seen from the side view (in relation to the first case component 210, when seen from the top of Figure 54 looking downwards, or in relation to the second case component 220, when seen from the bottom of Figure 54 looking upwards) (see Figure 55).

[0378] As illustrated in Figure 55, when the ink cartridge 14 that is formed by the second protruding parts 214a3 and 224a3 is attached to the refill unit 13 upside down (in the wrong orientation), the leading edge of the protrusion 55 on the case 40 side will fit into the steps 214a4 and 224a4 (the step 224a4 is not illustrated in the figure). Therefore, when attaching the ink cartridge 14 upside down, because the protrusion 55 will correctly match the steps 214a4 and 224a4, for instance, it is possible to consistently prevent problems in which the protrusion 55 passes the case protruding parts 214a and 224a and goes to the upper side of the case 200 in Figure 55 or to the lower side of the case protruding parts 214a and 224a in Figure 55, and thus the ink cartridge 14 is further inserted toward the back side of the case 40(the right side in Figure 55). Therefore, it is possible to consistently prevent the ink cartridge's striking the needle 49 and thus prevent destruction or deformation of the needle 49 and the remaining ink detection sensor 57.

[0379] The steps 214a4 and 224a4 of the fifth example of embodiment are formed in an L-shape (or V or U-shape) as seen from the side, but it is also acceptable to form them corresponding to the edge shape of the protrusion 55. In other words, it is acceptable for it to be any shape desired as long as it is a shape that will not come loose when attaching it in the wrong orientation and the edge of the protrusion is fitted into the steps 214a4 and 224a4.

[0380] Next, the sixth example of embodiment will be described while referring to Figures 56-58. Figure 56 is a cross-sectional diagram showing the state in which the ink cartridge 14 of the sixth example of embodiment has been inserted into the refill unit 13. Figure 57 is a block diagram showing a summary of the electrical structure of the multifunction device 1 in the sixth example of embodiment. Figure 58 is a flow chart showing the ink cartridge attachment detection process that is executed by the CPU 971. The sixth example of embodiment has an additional ink cartridge attachment detection sensor 960 in relation to the multifunction device 1 of the first example of embodiment. Therefore, the structure other than the ink cartridge attachment detection sensor 960 of the sixth example of embodiment is the same as in the first example of embodiment, and therefore, using the same references for the same items as in the first example of embodiment, the explanation of these will be omitted.

[0381] As illustrated in Figure 56, in the multifunction device 1 of the sixth example of embodiment, there is an ink cartridge attachment detection sensor 960. When the ink cartridge 14 has been attached to the correct attachment position, the edge of the case protruding parts 214a and 224a will press a protruding piece of the ink cartridge attachment detection sensor 960 and by pressing this protruding piece, the ink cartridge attachment detection sensor 960 will send a signal to the control board 970. The control board 970 is a control device to perform the main control of the multifunction device 1.

[0382] As illustrated in Figure 57, the control board 970 includes a CPU 971 which is the calculation means, a ROM 972 which is the memory that cannot be overwritten and which stores the control program and the fixed value data, a RAM 973 which is the memory that can be overwritten and which is used as the work memory, the EEPROM 974 which is the nonvolatile memory that can be overwritten and which stores data even after the power source is turned off, the PC interface 975 which performs electrical connections between the external PC 980 and the control board 970, the inkjet printer 976 which performs printing by discharging ink as instructed by the CPU 971, the liquid crystal display part 35 which performs each type of display, the remaining ink detection sensor 57 which detects the amount of ink remaining in the ink cartridge 14, and ink cartridge attachment detection sensor 960 that detects whether the ink cartridge 14 has been attached or not, and the interface circuit 978 that performs input and output of each type of signal. While it is not illustrated in the figure, there are also various counters and timers included, the updating of the counter values and timer values will be performed according to the processing performed within the CPU 971.

[0383] Within the EEPROM 974, there is an ink cartridge attachment flag 974a. This ink cartridge attachment flag 974 will not only go on when the ink cartridge 14 has been correctly attached, it is a flag that will go off when the ink cartridge 14 has been removed. Further, once the ink cartridge attachment flag 974a has been turned on, it will remain in the on state until it is turned off by the ink cartridge attachment detection sensor 960.

[0384] The ink cartridge attachment detection process illustrated in Figure 58 is an interruption process that is executed at the specific intervals (for instance, every 4 ms) after completion of the initial set-up process (not illustrated in the figure) after the power source has been turned on for the multifunction device 1. In the following explanation, the ink cartridge attachment detection sensor 960 will go on when the protruding piece of the ink cartridge attachment sensor is pressed, and it will go off when the protruding piece is not pressed. Also, the remaining ink detection sensor 57 will go on when the amount of light received by the light receiving part 57b is below a certain level (when the light path between the light emitting part 57a and the light receiving part 57b is obstructed), and it will go off when the amount of light received by the light receiving part 57b has exceeded a certain level (when the light emitted from the light emitting part 57a is received by the light receiving part 57b).

[0385] When the ink cartridge attachment detection process is executed, first, it will confirm whether the ink cartridge attachment detection sensor 960 is on or not (S101), and if the ink cartridge attachment detection sensor 960 is off (S101: No), then there is no ink cartridge 14 attached to the multifunction device 1, so setting the value of the ink cartridge attachment flag 974a to be 0 (S102), the ink cartridge will display onto the liquid crystal display part 35 that the ink cartridge 14 has not been attached (S103), and this process will end. In the event that a new multifunction device 1 is being used for the first time after shipping from factory, the value of the ink cartridge attachment flag 974a has been set to 0.

[0386] As the result of confirmation by the S101 process, if the ink cartridge attachment detection sensor 960 is on (S101: Yes), it means that the ink cartridge 14 has been attached, and then this process will confirm whether the value of the ink cartridge attachment flag 974a is 1 or not (S104). In the event that the ink cartridge 14 is attached from the state of not being attached, the value of the ink cartridge attachment flag 974a should be 0 (S104: No), and then this process will confirm whether the remaining ink detection sensor 57 is on or not based on the timing in which the ink cartridge 14 is attached (S105). If the remaining ink detection sensor 57 is off (S105: No), it means that the ink cartridge 14 which is in the state where the shielding arm part 473c has been removed from between the light emitting part 57a and the light receiving part 57b has been attached, or in other words, the ink cartridge with little ink remaininghas been attached. Therefore, ink empty display will be displayed on the liquid crystal display part 35 (S112), and this process will end.

[0387] On the other hand, within the S105 process, if the remaining ink detection sensor 57 is on (S105: Yes), then this process will confirm whether the remaining ink detection sensor 57 has been on or not for longer than the specific time (for instance, greater than 10 s) (S106). If the remaining ink detection sensor 57 has been on for longer than the specific time (S105: Yes), it means that the remaining ink detection sensor 57 has been already on for longer than the specific time at the timing where the ink cartridge 14 is attached, so it is considered that there are impurities attached to the surface of the light emitting part 57a and the light receiving part 57b of the remaining ink detection sensor 57, where these impurities are obstructing the light path between these surfaces, or it is considered that the sensor 960 malfunctions. Therefore, if the S106 process is Yes, then a remaining ink detection sensor abnormality will be displayed on the liquid crystal display part 35 (S107), and this process will end.

[0388] Within the S106 process, if the remaining ink detection sensor 57 has not been on for longer than the specific time (S106: No), next, this process will determine whether or not the ink cartridge attachment detection sensor 960 has been on for longer than the specific time (for instance, 10 s) (S108). As described above, the processing after "S104 is No" is a process to be performed in the event that the ink cartridge 14 is attached from the state of not being attached, and so if the ink cartridge attachment detection sensor 960 has already been on for longer than the specific time, there may be damage in the ink cartridge attachment detection sensor 960. Therefore, if the ink cartridge attachment detection sensor 960 has been on for longer than the specific time (S108: Yes), then an ink cartridge attachment detection sensor abnormality will be displayed on the liquid crystal display part 35 (S109), and this process will end.

[0389] Within the S108 process, unless the ink cartridge attachment detection sensor 960 is on for longer than the specific time (S108: No), when because this means that the ink cartridge 14 has been correctly attached, the value of the ink cartridge attachment flag 974a will be set to 1 (S 110), and this process will end. In other words, the ink cartridge attachment detection sensor 960 and the remaining ink detection sensor 57 will change in approximately the same timing, and when the value of the ink cartridge attachment flag 974a is set to 1, by detecting attachment of the ink cartridge 14, it will be set to the state in which it is possible to print using the multifunction device 1.

[0390] Within the S110 processing, when the ink cartridge attachment flag 974a is set to 1, in the processing after that, the process of S104 will go to Yes, and the process to detect the remaining ink within the ink cartridge 14 will be performed. In other words, within the S111 process, whether or not the remaining ink detection sensor 57 has become on or not will be confirmed, and if the remaining ink detection sensor 57 is on (S111: Yes), then there is ink within the ink cartridge 14, and this process will end as is, and if the remaining ink detection sensor 57 is off (S111: No), then an ink empty display will be displayed on the liquid crystal display 35 (S112), and this process will end.

[0391] When the value of the ink cartridge attachment flag 974a is 1, in other words, if no error has been detected, the multifunction device 1 will allow execution of

the printing process (not illustrated in the figure), and therefore, it is possible to avoid execution of the printing process in the state in which it is unclear whether the ink cartridge 14 has been attached or not.

[0392] When each of the errors has been displayed, and if there is an abnormal deletion operation executed, such as an operation of the abnormal deletion button, the ink cartridge attachment flag 974a will be initialized to 0.

[0393] As described above, in the sixth example of embodiment, it is not only possible to distinguish and detect the unattached state of the ink cartridge 14 and when the ink is empty, it is also possible to detect any abnormalities in each sensor. Also, when replacing the ink cartridge 14, as the ink cartridge attachment detection sensor 960 will be turned off, the value of the ink cartridge attachment flag 974a will be set to 0, and therefore, it is always possible to accurately detect whether the ink cartridge 14 is attached or whether the ink is empty. Also, when removing the ink cartridge 14, when ink is adhered to the light emitting part 57a or the light receiving part 57b of the remaining ink detection sensor 57, it is possible to accurately detect any abnormalities of the remaining ink detection sensor 57 when attaching the ink cartridge 14. Also, when removing the ink cartridge 14, if the ink cartridge attachment detection sensor 960 is already broken, an ink empty display will be displayed even though the ink cartridge 14 is not attached. Therefore, it is possible for the user to recognize that there has been some sort of abnormal occurrence. If an abnormal deletion operation is performed, then because the value of the ink cartridge attachment flag 974a is set to 0, in the event that an ink cartridge 14 is attached next, then it is possible to display the abnormality of the ink cartridge attachment detection sensor 960, making it possible for this to be made known to the user.

[0394] As in the first example of embodiment, if there is no ink cartridge attachment detection sensor 960, it is possible for the remaining ink detection sensor 57 to detect the existence or lack of any remaining ink. It is also possible for the remaining ink detection sensor 57 to detect that the ink cartridge 14 is attached (or more correctly, that an ink cartridge with an enough amount of remaining ink has been attached), if the remaining ink detection sensor 57 changed from off to on. It is acceptable to allow the execution of printing processes when the remaining ink detection sensor 57 detects that the ink cartridge 14 is attached.

[0395] Next, referring to Figure 59, the seventh and eighth examples of embodiment will be described. Figure 59 is an angled view showing the external appearance of the ink cartridges 6014 and 7014 of the seventh and eighth examples of embodiment, Figure 59(a) is an angled view showing the external appearance of the ink cartridge 6014 in the seventh example of embodiment, and Figure 59(b) is an angled view showing the external appearance of the ink cartridge 7014 of the eighth example of embodiment. The ink cartridges 6014 and 7014 of the seventh and eighth examples of embodiment are constructed such that the shapes of the side surfaces on which the ink supply parts 4120 and 5120 are formed will be different in relation to the ink cartridges 4014 and 5014 of the third and fourth examples of embodiment. Therefore, the structure other than the side surfaces on which the ink supply parts 4120 and 5120 of the seventh and eighth examples of embodiment are formed is the same as the ink cartridges 4014 and 5014 of the third and fourth examples of embodiment, and therefore, the same references for the parts that are the same as in the third and fourth examples of embodiment will be used, and the explanation of these is omitted.

[0396] As illustrated in Figure 59(a), there is a concave part 6100 formed above the ink supply part 4120 (above the ink supply part 4120 in the attached state of the ink cartridge 4120 (the state in Figure 59(a)). There is a detection part 6140 formed in the central position of this concave part 6100. Therefore, on both sides of the detection part 6140, there is a space formed in which the light emitting part 57a and the light receiving part 57b of the remaining ink detection sensor 57 can be inserted.

[0397] As illustrated in Figure 59(b), there is a concave part 7100 formed above the ink supply part 5120 (above the attached state of the ink cartridge 5120 (the state in Figure 59(b)). There is a detection part 7140 formed in the central position of this concave part 7100. Therefore, on both sides of the detection part 7140, there is a space formed in which the light emitting part 57a and the light receiving part 57b of the remaining ink detection sensor 57 can be inserted.

[0398] Also, the detection parts 6140 and 7140 of the ink cartridges 6014 and 7014 of the seventh and eighth examples of embodiment are arranged within the concave parts 6100 and 7100 formed on the side surfaces, so it is possible to reduce any adherence of ink that has flown from the ink supply parts 4120 and 5120 onto the detection parts 6140 and 7140.

[0399] It is acceptable to construct the surface of the concave parts 6100 and 7100 on the ink supply parts 4120 and 5120 side as a sloped surface that is sloped in the direction of the ink supply parts 4120 and 5120. By using this structure, if any ink is adhered onto the detection parts 6140 and 7140, the ink will not accumulate within the concave parts 6100 and 7100, making it possible to reduce any adherence of ink onto the detection parts 6140 and 7140.

[0400] The detection parts 6140 and 7140 of the seventh and eighth examples of embodiment can also contain sensor arms inside as in the first example of embodiment. By using a sensor arm 470, it is possible to accurately detect the amount of ink remaining when the ink cartridges 4014 and 5014 are attached into the multifunction device 1.

[0401] Next, referring to Figure 60, we will explain the ninth example of embodiment..Figure 60 is a diagram showing the ink cartridge 8014 and refill unit 13 of the ninth example of embodiment. The same parts as in the

first example of embodiment have the same references attached and the explanation of these will be omitted. Also, while the structure of the pullout member 65 of the door main body 60 in the ninth example of embodiment is different to that in the first example of embodiment, the explanation of this will be omitted.

[0402] As illustrated in Figure 60, the ink cartridge 8014 of the ninth example of embodiment has a pushing part 8200a that is configured to contact the pressing retaining member 61 of the door main body 60 and that protrudes towards the outside from the side surface 1 of the ink cartridge 8014. In other words, the pushing part 200a of the first example of embodiment was one part of a specific range of the side surface 1 of the case 200, but the pressing part 8200a of the ninth example of embodiment has the structure where there is a specific part that contacts the pressing retaining member 61. In the ninth example of embodiment, the structure of the pushing part 8200a is such that it protrudes from the side surface, but it is acceptable to form it in the opposite concave shape. In this case, the pressing retaining member will be constructed such that it protrudes from the door main body 61.

[0403] Next, referring to Figures 61-63, the tenth example of embodiment will be described. Figure 61 is an angled diagram showing the external appearance of the ink cartridge 9014 of the tenth example of embodiment. Figure 62 is an exploded perspective view showing the ink cartridge 9014 of the tenth example of embodiment. Figure 63 is a diagram to explain the procedure for replacing the ink reservoir element. The ink cartridge 14 of the first example of embodiment had a structure in which the ink reservoir element 100 was not replaceable because it was welded into the first and second case members 210 and 220, but in contrast, this ink cartridge 9014 of the tenth example of embodiment is constructed such that the ink reservoir element 100 is replaceable.

[0404] Further, the ink cartridge 9014 of the tenth example of embodiment has mostly the same structure as the ink cartridge 14 of the first example of embodiment, and therefore, only the structure that is different in relation to the ink cartridge 14 of the first example of embodiment will be described, and using the same references for the same parts as in the first example of embodiment, the explanation of these will be omitted.

[0405] As illustrated in Figure 61, the ink cartridge 9014 of the tenth example of embodiment has a seal 9100 attached to the outer surface of the case 200. This seal 9100 is attached onto the maximum surface 220a and the vertical wall part 220c of the second case member 220 and the vertical wall part 210c and the maximum surface 210a of the first case member 210. In other words, the seal 9100 is attached to the side surface opposing the protector 300 (opposing the edge surface on which the ink supply part 120, the ambient air intake part 130 and the detection part 140 are located). The seal 9100 not only has the model of the ink cartridge 9014 listed on it, but it also has imprinted on it the color corresponding to the ink color such that it is possible to visually recognize the color of the ink that is stored within the ink cartridge 9014. Therefore, by attaching this seal 9100, it is possible for the use to visually recognize the ink color, making it possible to prevent storage of the ink cartridge 9104 in the wrong accommodating chamber 50 within the case 40.

[0406] As illustrated in Figure 62, within the vertical wall part 210b of the first case member 210, there are engagement parts 9200a and 9200b formed which protrude in the direction of the second case member 220 (in the Z direction, or in the upwards direction in Figure 62). On the other hand, within the vertical wall part 220b of the second case member 220, there are engagement holes 9201a and 9201b formed which engage with the edges of the engagement parts 9200a and 9200b respectively.

[0407] Therefore, when manufacturing the ink cartridge 9014, first, the ink reservoir element 100 is placed within the first case member 210, and fitting the engagement parts 9200a and 9200b of the first case member 210 with the engagement holes 9201a and 9201b of the second case member 920, the first case member 210 and the second case member 220 are joined. Then, the seal 9100 is adhered along the maximum surface 210a and the vertical wall part 210c of the first case member 210 and the maximum surface 220a and the vertical wall part 210c of the second case member 220. Then, by attaching the protector 300, the ink cartridge 9014 is manufactured.

[0408] The ink cartridge 9014 of the tenth example of embodiment has undergone the joining of the first case member 210 and the second case member 220, the adhesion of the seal 9100 onto the first and second case members 210 and 220, and the fitting of the engagement parts 9200a and 9200b with the engagement holes 9201a and 9201b., Therefore, by undoing the union of the engagement parts 9200a and 9200b with the engagement holes 9201a and 9201b, it is possible to undo the connection between the first case member 210 and the second case member 220. It is possible to simply perform the undoing of the connection between the engagement parts 9200a and 9200b and the engagement holes 9201a and 9201b by pressing the edge of the engagement parts 9200a and 9200b via the engagement holes 9201a and 9201b from the outer side of the vertical wall part 210b on which the case cutout parts 221 to 223 have been formed.

[0409] Also, as illustrated in Figure 63, because one edge surface of the first and second case members 210 and 220 are connected via the seal 9100, it is possible to perform opening and closing operations using the edge of the vertical wall parts 210c and 220c as an axis (an opening and closing operation in the arrow direction in Figure 63, or in the X direction). In other words, the seal part 9100 is a connecting member to connect the first and second case members 210 and 220, and it serves as a hinge material, which can open and close the first

and second case members 210 and 220. Therefore, the replacement of the ink reservoir element 100 is performed by undoing the connection between the engagement parts 9200a and 9200b and the engagement holes 9201a and 9201b, and when the second case member 220 is open with respect to the first case member 210, the new ink reservoir element 100 is inserted, and then, the first and second case members 210 and 220 are connected. In the present tenth example of embodiment, while the ink reservoir element 100 is replaced with new one, it is also acceptable to use a product in which ink has been re-injected into the ink reservoir element 100.

[0410] As described above, the ink cartridge 9014 of the tenth example of embodiment can easily undergo the replacement of the ink reservoir element 100. Also, in this example of embodiment, because detection of the remaining ink (combined with attachment detection of the ink cartridge) is performed by the remaining ink detection sensor 57 that is placed on both sides of the detection part 140 of the ink reservoir element 100, if an ink cartridge 9104 with no ink reservoir element 100 contained is attached, then the determination will be made that there is no remaining ink (or that there is no ink cartridge attached). Therefore, as there will be no printing process performed by the multifunction device 1 in the state in which an ink cartridge 9014 with no ink reservoir element 100 contained has been attached, it is possible to reduce the possibility of generating printing problems.

[0411] Next, referring to Figure 64, the eleventh example of embodiment will be described. Figure 64 is a diagram showing the ink reservoir element 9300 of the eleventh example of embodiment. The ink reservoir element 9300 of the eleventh example of embodiment is fixed within the first and second case members, but we will omit a detailed explanation and description of the first and second case members.

[0412] As illustrated in Figure 64, the ink reservoir element 9300 of the eleventh example of embodiment is constructed of a hard part 9301 that is formed through injection moldeing using a resin material, and a bag element 9302 that has flexibility and which forms a reservoir space to store the ink inside, and which is connected to the hard part 9301. The hard part 9301 has a detection part (irradiation part) 9303 that is to be placed between the light emitting part 57a and the light receiving part 57b of the remaining ink detection sensor 57, and an ink supply part including the ink supply mechanism 500 and the supply cap as in the first example of embodiment.

[0413] Therefore, the ink reservoir element 9300 of the eleventh example of embodiment is manufactured using the hard part 9301 and the bag part 9302, and therefore, it is possible to have a simplified structure in comparison to the case where the entirety of the ink reservoir element is formed through a molding using a resin material. Therefore, it is possible to improve the yield when manufacturing the ink reservoir element 9300, making it possible to achieve a reduction in manufacturing costs.

[0414] The ink reservoir element 9300 of the eleventh example of embodiment is formed using the bag part 9302 which forms the reservoir space to store the ink, and so when the ink within the bag part 9302 is reduced, the bag part 9302 will shrink according to this reduction, and when the ink is depleted, the reservoir space will be mostly depleted as well. Therefore, it is not possible to place a sensor arm (rotating member) to detect the amount of ink remaining within the bag part 9302.

[0415] However, the hard part 9301 in the ink reservoir element 9300 is formed to have light barrier properties, and because it is placed between the light emitting part 57a and the light receiving part 57b of the remaining ink detection sensor 57, it will always block the emitted light that is emitted from the light emitting part 57a. Therefore, while it is not possible to detect the amount of ink remaining within the bag part 9302, it is possible to detect whether there is an ink reservoir element 9300 contained within the first and second case members, and therefore, it is possible to prevent any printing processes from being performed by the multifunction device 1 while the ink reservoir element 9300 is not contained within the first and second case menbers.

[0416] Above, the present invention was described based on the examples of embodiment, but the present invention is not limited to these examples of embodiments, and it is easy to reason that it would be possible to make various improvements or modifications within a scope that does not diverge from the claims of the present invention.

[0417] Now, referring to Figures 65 to 67, the modified examples of the combinations of the case members will be described. Figures 65 to 67 are diagrams to explain the modified examples of the combinations of the case members. As described above, in the present example of embodiment, the three types of cases 200, 1200 (or 1200α) and 2200 were formed with differing sizes for the outer shapes using the two types of first case members 210 and first case members 1210 and 2210 with different thicknesses, and the two types of second case members 220 and second case member 2220 with different thicknesses. In place of this, the combination of the case members in this modified example can be formed of four types of cases with differing sizes of outer shape from four case members (where the internal capacity is different). First, an explanation will be made while referring to Figure 65. As illustrated in Figure 65(a), case C1 is formed of a case member 120 and a case member r21. The thickness of the case member 120 is t20 and the thickness of the case member r21 is t21, which is thicker than the thickness t20. As illustrated in Figure 65(b), case C2 is formed of the case member 121 and the case member r22. The thickness of the case member 121 is t21 and the thickness of the case member r22 is t 22, which is thicker than the thickness t21. Further, the difference between the thickness t22 of the case member r22 and the thickness t21 of the case member r21 is different than the difference between the thickness t21 of the case member 121 and the thickness t20 of the case member 120.

[0418] By changing the combination of the case members 121 and r22 which form the case C2 and the case members 120 and r21 which form the case C1, the case C3 as illustrated in Figure 65(c) and the case C4 as illustrated in Figure 65(d) are formed. More specifically, case C3 is formed of the case member 120 and the case member r22, and case C4 is formed of the case member 121 and the case member r21.

[0419] Therefore, using the four case members 120 and r21 which form the case C 1 and the case members 121 and r22 which form the case C2, the small scale case C1, the large scale case C2 and the two types of mid-sized cases C3 and C4 are formed. Also, the size (thickness) of the outer shape of cases C1 to C4 are all different, with the relationship C1<C4<C3<C2. Therefore, it is possible to form four cases with different outer shapes according to the amount of ink to be stored using the four case members 120, r21,121 and r22.

[0420] In this way, in the manufacture of four types of cases with differing outer shapes using the four case members requires a further second condition to be added to the above first condition. This second condition is that the difference (t22-t21) between the thickness t22 of one side of the case member (case member r22) which forms the largest first ink cartridge (case C2) and the thickness t21 of one side of the case member (case member r21) that forms the smallest third ink cartridge (C1) must be different than the difference (t21-t20) between the thickness t21 of the other side of the case member (case member 121) that forms the largest first ink cartridge and the thickness t20 of the other side of the case member (case member 120) that forms the smallest third ink cartridge. For instance, if the first condition was met but the second condition was not, then the thicknesses would be t20=10 mm, t21=25 mm, and t22=40 mm (t22 - t21=15 mm, t21 - t20=15 mm), and the thicknesses of each of the cases would be C1=35 mm, C2=65 mm, C3=50 mm, and C4=50 mm, meaning only cases with three types of sizes could be manufactured, and if both the first and second condition is met, then the thicknesses would be t20=10 mm, t21=20 mm, and t22=40 mm (t22 - t21=20 mm, t21 - t20= 1 0 mm), and the thicknesses of each of the cases would be C1=30 mm, C2=60 mm, C3=50 mm, and C4=40 mm, making it possible to manufacture cases with four types of sizes.

[0421] Next, an explanation will be made while referring to Figure 66. As illustrated in Figure 66, the case C5 is formed of the case member 120 and the case member r20. The thicknesses of the case members 120 and r20 are formed of t20. The case C2 illustrated in Figure 66 (b) is the same as the case C2 in Figure 65(b), and so the explanation of this will be omitted.

[0422] By changing the combination of the case members 120 and r20 which form the case C5 and the case members 121 and r22 which form the case C2, the case C3 illustrated in Figure 66(c) and the case C6 illustrated in Figure 66(d) are formed. More specifically, the case C3 is formed of the case member 120 and the case member r22, and the case C6 is formed of the case member 121 and the case member r20. Further, the difference between the thickness t20 of the case member r20 and the thickness t22 of the case member r22 is different than the difference between the thickness t21 of the case member 121 and the thickness t20 of the case member 120, fulfilling both the first and second conditions described above.

[0423] Therefore, using the four case members 120 and r20 which form the case C5 and the case members 121 and r22 which form the case C2, the small scale case C5, the large scale case C2 and the two types of mid-sized cases C3 and C6 are formed. Also, the size (thickness) of the outer shape of cases C2, C3, C5, and C6 are all different, with the relationship C5<C6<C3<C2. Therefore, it is possible to form four cases with different outer shapes according to the amount of ink to be stored using the four case members 120, r21,121 and r22.

[0424] Next, an explanation will be made while referring to Figure 67. As case C1 illustrated in Figure 67(a) is the same as the case C1 illustrated in Figure 65, the explanation of this will be omitted here. As illustrated in Figure 67 (b), the case C7 is formed of the case member 122and the case member r22. The thicknesses of the case members 122 and r22 are formed of t22.

[0425] By changing the combination of the case members 120 and r21 which form the case C1 and the case members 122 and r22 which form the case C7, the case C3 illustrated in Figure 67(c) and the case C8 illustrated in Figure 67(d) are formed. More specifically, the case C3 is formed of the case member 120 and the case member r22, and the case C8 is formed of the case member 122 and the case member r21. Further, the difference between the thickness t22 of the case member r22 and the thickness t21 of the case member r21 is different than the difference between the thickness t22 of the case member 122 and the thickness t20 of the case member 120, fulfilling both the first and second conditions described above.

[0426] Therefore, using the four case members 120 and r21 which form the case C 1 and the case members 122 and r22 which form the case C7, the small scale case C1, the large scale case C7 and the two types of mid-sized cases C3 and C8 are formed. Also, the size (thickness) of the outer shape of cases C1, C3, C7, and C8 are all different, with the relationship C1<C3<C8<C7. Therefore, it is possible to form four cases with different outer shapes according to the amount of ink to be stored using the four case members 120, r21,122 and r22.

[0427] As described above, within the case members that form each case, when the thickness of the case members that are placed on one side are different than the thicknesses of the case members that are placed on the other side, it is possible to form four cases with different outer sizes (different internal capacities) from the four case members.

[0428] Next, another modified example of the present example of embodiment will be explained. In the above

example of embodiment, by using the elasticity of the first and second supply springs 630 and 650 and the first and second ambient air springs 730 and 750, the supply valve 620 and the ambient air valve 720 are urged in the direction of the supply joint 610 and the ambient air joint 710 to block the ink flow path K and the ambient intake path L. In contrast, it is also acceptable to use the elasticity of the coil spring member that is formed using either a metal material or a resin material to urge the supply valve and the ambient air valve in the direction of the supply joint and the ambient air joint to block the ink flow path and the ambient air intake path. Also, as long as the coil spring is formed such that at least one part of it is conical, then it is also possible to reduce the scale of the ink supply mechanism and the ambient air intake mechanism. Also, without using the supply slider 640 and the ambient air slider 740, it is acceptable to construct the first supply spring 630 and the second supply spring 650 and the first ambient air spring 730 and the second ambient air spring 750 such that they are directly adjacent to each other, and further, to simplify the structure such that the supply valve and ambient air intake valve are on the bottom plane. By using this type of structure, it is possible to simplify the ink supply mechanism and the ambient air intake mechanism, making it possible to achieve a reduction in manufacturing costs. Further, it is also acceptable to have a structure in which the first supply (ambient air) spring and the second supply (ambient air) spring are connected as one unit. Also, without using a valve hook 626 and 726 in the supply valve 620 and the ambient air valve 720, it is acceptable to connect the supply (ambient air) slider 640 (740) and the first and second supply (ambient air) springs 630 and 650 (730 and 750) as one unit, and to have a construction in which the unified supply (ambient air) slider and the first and second supply (ambient air) springs can move freely.

[0429] Also, while the check valve 670 was constructed of the umbrella part 671 and the shaft part 672, it is acceptable to construct it of only the umbrella part 671. The check valve 670 is used to prevent backflow of the ink, and therefore, it is acceptable to construct it such that it can block the connection of the first cover through-hole 683 and the second cover through-hole 684 of the cover 680. Also, it is acceptable to construct the cover 680 without the second cover through-hole 684.

[0430] Also, in the above example of embodiment, while the space between the joint protruding part 614 and the joint contact part 613 of the supply joint 610 was formed in a circular base form, it is also acceptable to form a groove around the periphery of the joint contact part of the supply joint. Because any displacement of the joint protruding part will be absorbed by this groove, it is possible to reduce displacement in the insertion direction of the joint contact part as the needle 49 is inserted. Further, by increasing the inner diameter of the joint contact part in relation to the inner diameter of the joint protruding part, it is possible to reduce any transmission of the displacement of the joint protruding part to the joint contact part.

[0431] Also, in the above example of embodiment, while a film 160 was welded onto both sides of the first opening 112a and the second opening 112b of the frame part 110, it is acceptable to close one opening using the side wall, and to weld the film 160 onto only the other opening. In this case, the second opening 112b side is closed by the side wall, and by having the construction in which the film 160 is welded to the first opening 112a, it is possible to form a film 160 on the side wall of the ambient air connection passage 433, making it possible to reduce the formation of a meniscus on the ambient air connection passage 433. Also, in the case of closing the second opening 112b with the side wall, that side wall will become a support substrate, and as this will provide the strength of the frame part, it is acceptable to have a construction in which the connection formation part (partition plate), which is connected within the ink reservoir chamber, is not used. In this case, it is acceptable to have an internal weld part only from one surface side of the support substrate.

[0432] Also, in the above example of embodiment, the film 160 that is welded onto the frame 110 was constructed of a nylon layer on the frame part 110 side, but it is also acceptable to apply a water-resistant coating onto this nylon layer. By using this type of construction, it is possible to prevent the formation of a meniscus on the ambient air connection passage 433.

[0433] Also, in the above example of embodiment, the ambient air communicating passage forming part 430 was constructed such that it sloped downwards towards the second ambient air communicating chamber 432 from the first ambient air communicating chamber 431, but because one surface of the ambient air communicating passage 433 is constructed of a film 160, it is possible to prevent the formation of a meniscus within the ambient air communicating passage 433. Therefore, it is acceptable to have a construction in which the ambient air communicating passage forming part 430 does not necessarily slope downwards, and it is acceptable to have a construction in which it is horizontal in the state when the ink cartridge 14 is attached.

[0434] Also, in the above example of embodiment, while all of the welding processes were performed using ultrasonic welding, in the case that it is possible to perform attachment using an adhesive, it is acceptable to make all attachments using an adhesive, and it is also acceptable to use a different welding method for welding. For instance, the welding of the case 200 can be substituted with attachment using an adhesive as it is only important to ensure that the first and second case members 210 and 220 do not separate.

[0435] Below, we will show modified examples of the ink cartridge according to the present invention, the ink reservoir element, the packaging of the ink cartridge, the manufacturing method for the ink cartridge packaging unit and of the manufacturing method for the ink cartridge.

[0436] Ink cartridge A1 comprises an ink cartridge

which contains an ink reservoir element having an internal space to store the ink and a case which contains said ink reservoir element, and which is attached to an inkjet recording device to perform recording by discharging said ink; where said ink reservoir element contains a frame member having an opening which is connected to said internal space and a film which covers said opening and which is fixed to the periphery of said opening, and said frame member has a rib which supports said film from the sides of said internal space.

[0437] Ink cartridge A2 comprises ink cartridge A1, where said film is fixed to said ribs.

[0438] Ink cartridge A3 comprises ink cartridge A2, where the fixing of said film and said rib is performed through mutual connection of the two by welding at least one side within said film and said rib.

[0439] Ink cartridge A4 comprises ink cartridge A3, where the fixing part of said rib which is fixed to said film is positioned on the same virtual planar surface as the fixing part in periphery of said opening which is fixed to said film.

[0440] Ink cartridge A5 comprises any of the ink cartridges A1 to A4, where, when the part that is opposing said opening and which is one part of said case is displaced towards the side of said opening, said displacement is limited by said ribs.

[0441] Ink cartridge A6 comprises any of the ink cartridges A1 to A5, where, when attached to said inkjet recording device, said ribs are formed such that in addition to being sloped downwards, the edge of the downwards slope is a free edge, where these ribs can guide said ink which flows due to gravity towards the bottom side of said internal space.

[0442] Ink cartridge A7 comprises any of the ink cartridges A1 to A6, where there are multiple said ribs, which are arranged to be dispersed within the opening region of said frame member.

[0443] Ink cartridge A8 comprises any of the ink cartridges A1-A7, where said frame member contains an outer frame part that surrounds said opening, and a support substrate that extends horizontally along the opening surface of said opening from said outer frame part, and said ribs are supported by said support substrate.

[0444] Ink reservoir element A9 can be used in any of the ink cartridges A1 to A8.

[0445] Ink cartridge B 1 which contains an ink reservoir element having an internal space to store the ink and a case that surrounds said ink reservoir element, where, in an ink cartridge which is attached into an inkjet recording device to perform recording by discharging said ink, said ink reservoir element contains a frame member having a first opening and a second opening which is connected to said internal space and a film which covers said first opening and said second opening respectively and which is fixed to the periphery of each said first opening and second opening; and said frame member has a partition plate to partition said internal space into first chamber of said first opening side and the second chamber of said second opening side, a first rib to support said film from said first opening side and which is formed from said partition plate, and a second rib to support said film from said second opening side and which is formed from said partition plate.

[0446] Ink cartridge B2 comprises ink cartridge B1, where said film is fixed to said first rib and said second rib respectively.

[0447] Ink cartridge B3 comprises ink cartridge B2, where the fixing of said film and said first rib and said second rib is performed through mutual connection of the two by welding at least one side within said film and said first rib and said second rib.

[0448] Ink cartridge B4 comprises ink cartridges B2 and B3, where the fixing part of said first rib which is fixed to said film is positioned on the same virtual planar surface as the fixing part in periphery of said first opening which is fixed to said film, and the fixing part of said second rib which is fixed to said film is positioned on the same virtual planar surface as the fixing part in periphery of said second opening which is fixed to said film.

[0449] Ink cartridge B5 comprises ink cartridge B4, where said first virtual planar surface and said second virtual planar surface are horizontal.

[0450] Ink cartridge B6 comprises any of the ink cartridges B1 to B5, where, when the part that is opposing said first opening and said second opening and which is one part of said case is displaced towards the side of said first opening and said second opening, said displacement is limited by said first rib and said second rib respectively.

[0451] Ink cartridge B7 comprises any of the ink cartridges B1 to B6, where, when attached to said inkjet recording device, said first rib and said second rib are formed such that in addition to being sloped downwards, the edge of the downwards slope is a free edge, where these ribs can guide said ink which flows due to gravity towards the bottom side of said first chamber and said second chamber.

[0452] Ink cartridge B8 comprises any of the ink cartridges B1 to B7, where there are multiple said first rib and said second rib which are arranged to be dispersed within the opening region of said frame member.

[0453] Ink cartridge B9 comprises any of the ink cartridges B1 to B8, where said partition plate has a communicating passage that connects said first chamber and said second chamber.

[0454] Ink cartridge B10 comprises ink cartridge B9, where there is a rotating member to rotate according to the reduction of said ink and which is supported axially within said internal space, and where said rotating member is placed within said communicating passage.

[0455] Ink cartridge B11 comprises ink cartridge B10, where said rotating member has a circular shaft part, and said partition plate not only has a clamping part that can rotate the shaft part of said rotating member, but said clamping part is formed in a cross-sectional C-shape where the side that faces said communicating passage

is open, and by inserting the shaft part of said rotating member into the clamping part of said partition plate, it is possible to support said rotating member such that it can rotate in said partition plate.

[0456] Ink cartridge B12 comprises any of the ink cartridges B1 to B11, where said frame member has a supporting wall part which is formed from said partition plate, and said supporting wall part is lower in height than said ribs.

[0457] Ink cartridge B13 comprises ink cartridge B12, where said supporting wall part is formed to be thinner than said ribs.

[0458] Ink cartridge B 13 comprises ink cartridges B12 and B 13, where said supporting wall part is formed from said partition plate in the edge part of said partition plate, which is adjacent to, said communicating passage.

[0459] Ink cartridge B 15 comprises ink cartridges B 12 to B 14, where when there are multiple said ribs, said multiple ribs are connected by said supporting wall part.

[0460] Ink cartridge B16 comprises any of the ink cartridges B11 to B15, where said frame member has an outer frame part that surrounds said first opening and said second opening, and said partition plate is formed such that it extends from said outer frame part in the space between the surfaces of said first opening and said second opening.

[0461] Ink reservoir element B 17 can be used in any of the ink cartridges B 1 to B 16.

[0462] Ink cartridge C1, where, in an ink cartridge which has an ink reservoir element having an internal space to store the ink, and which is attached to an inkjet recording device that performs recording by discharging said ink, said ink reservoir element contains an injection part having an ink injection path into which the cylinder member can be inserted and a communicating part that connects the ink injection path of said injection path with said internal space, where said communicating part has a first hole which connects to the ink injection path of said injection part, a second hold which connects to said internal space, and a connection path that connects said first hole and second hole and connects said ink injection path with said internal space, such that when said ink reservoir element is in the state of ink injection which is the state of performing the ink injection operation to inject ink into said internal space via the ink injection path of said injection part, said second hole will be positioned higher than said first hole.

[0463] Ink cartridge C2 comprises ink cartridge C1, where said ink reservoir element contains a frame member having an opening and a film that is fixed to the periphery of said opening, and by closing the opening of said frame member, said internal space is formed between said frame member and said film, where said communicating part has a wall part that is formed within said internal space, and by fixing said film onto said wall part, said connection path is formed between said wall part and said film.

[0464] Ink cartridge C3 comprises ink cartridge C2, where said wall part is formed from the outside surface of said injection part.

[0465] Ink cartridge C3 comprises ink cartridges C2 and C3, where the fixing part of said wall part which is fixed to said film is positioned on the same virtual planar surface as the fixing part in the periphery of said opening which it fixed to said film.

[0466] Ink cartridge C5 comprises any of the ink cartridges C1 to C4, where the second hold of said communicating part is positioned on the opening side of said ink injection path which is the starting edge side in the direction of insertion of said cylinder part, and further, the first hole of said communicating part is positioned on the bottom side of said ink injection path which is the ending edge side of the insertion direction of said cylinder part.

[0467] Ink cartridge C6 comprises any of the ink cartridges C2 to C5, where the connecting path of said communicating part extends along a direct line.

[0468] Ink cartridge C7 comprises any of the ink cartridges C1 to C6, where, in the state of said ink injection, said communicating part is located at the highest part of said internal space.

[0469] Ink cartridge C8 comprises any of the ink cartridges C1 to C7, where said ink reservoir element is constructed as a hexagonal planar shape, and said injection part is located within said ink reservoir element facing towards insertion of said cylinder part from the side surface, which is located on one pair of surfaces having the largest area of said hexagon.

[0470] Ink cartridge C9 comprises any of the ink cartridges C9 to C10, where said ink injection operation is an operation to inject ink into said internal space via said ink injection path and further, to reduce the pressure within said internal space by absorbing said internal space via said ink injection path.

[0471] Ink cartridge C10 comprises ink cartridges C9, where said ink injection operation is an operation to inject ink into said internal space via said ink injection path and to reduce the pressure within said internal space by absorbing said internal space via said ink injection path.

[0472] Ink cartridge D1 which comprises an ink cartridge with an ink reservoir element which has an internal space to store ink and an ambient air intake part to take in the ambient air into the internal space of said ink reservoir element, where said ink reservoir element is constructed to have a first surface and a second surface that are mutually opposing and a side surface that connects the first surface and the second surface; where said ambient air intake part is located on said side surface of said ink reservoir element, and which is attached to an inkjet recording device that performs recording by discharging said ink; where said ink reservoir element has an ambient air communicating path that leads the ambient air from said ambient air intake part into said internal space; where said ambient air communicating path has a first communicating chamber that connects to said ambient air intake part, a second communicating chamber which connects to said internal space, and a connection path

that connects said second communicating chamber with said first communicating chamber; where said first communicating chamber and second communicating chamber are formed as a space such that the bottom surface is positioned on the side of said first surface and the top surface is positioned on the side of said second surface; where the first hole that connects said first communicating chamber and said ambient air intake part is located in a position that is separated from the bottom surface of said first communicating chamber; and further, where the second hole that connects said connection path and said second communicating chamber is located in a position that is separated from the top surface of said second communicating chamber.

[0473] Ink cartridge D2 comprises ink cartridge D1, where, when using said first surface as the loading surface, said first hole is positioned above said second hole, and further, when using said second surface as the loading surface, said second hole is positioned above said first hole.

[0474] Ink cartridge D3 comprises ink cartridges D1 and D2, where said first hole is located in a position adjacent to the top surface of said first communicating chamber in addition to opening a hole in the side wall surface of said first communicating chamber.

[0475] Ink cartridge D4 comprises ink cartridges D1 to D3, where said second hole is located in a position adjacent to the top surface of said second communicating chamber in addition to opening a hole in the side wall surface of said second communicating chamber.

[0476] Ink cartridge D5 comprises any of ink cartridges D1 to D4, where said second communicating chamber has at least two holes with the third hole and fourth hole, which connect, said second communicating chamber and said internal space.

[0477] Ink cartridge D6 comprises ink cartridge D5, where in addition to having a partition plate to partition said first chamber and said second chamber in said internal space, the top surface of said second communicating chamber is constructed such that it overlaps with said partition plate, said third hole opens in the side wall surface of said communicating chamber, and said fourth hole opens into the top surface of said communicating chamber.

[0478] Ink cartridge D7 comprises ink cartridge D6, where said fourth hole is positioned within the angle part of said top surface, and opens onto the angle part which is positioned farthest away from said second hole.

[0479] Ink cartridge D8 comprises ink cartridge D6, where, in the state of attachment into said inkjet recording device, said fourth hole is positioned at the topmost position within said second communicating chamber.

[0480] Ink cartridge D9 comprises any of ink cartridges D5 to D8, where the hole area of said second hole is a smaller area than the hole area of said third hole and of said fourth hole.

[0481] Ink cartridge D10 comprises any of ink cartridges D5 to D9, where the path cross-sectional area of said connection path is a smaller area than the hole area of said third hole and said fourth hole.

[0482] Ink cartridge D11 comprises any of ink cartridges D1 to D10, where the hole area of said second hole is a smaller area than the hole area of said first hole.

[0483] Ink cartridge D12 comprises any of ink cartridges D1 to D11, where the path cross-sectional area of said connection path is a smaller area than the hole area of said first hole.

[0484] Ink cartridge D13 comprises any of ink cartridges D1 to D12, where said ink reservoir element contains a frame member having an opening that connects to said internal space and a film to cover said opening which is fixed to the periphery of said opening, and in addition to forming said frame member using the top surface of said connection path and the side wall surface of said connection path, the bottom surface of said connection path is formed using said film.

[0485] Ink cartridge D14 comprises ink cartridge D13, where in addition to forming said frame member using the top surface of said first communicating chamber and the side wall surface of said first communicating chamber, the bottom surface of said first communicating chamber is formed using said film.

[0486] Ink cartridge D15 comprises ink cartridges D13 and D14, where in addition to forming said frame member using the top surface of said second communicating chamber and the side wall surface of said second communicating chamber, the bottom surface of said second communicating chamber is formed using said film.

[0487] Ink cartridge D16 comprises ink cartridges D14 and D15, where said third hole is located in a position that is adjacent to the bottom surface of said second communicating chamber as well as opening into the side wall surface of said second communicating chamber, and one part of the opening periphery of said third hole is formed by said film.

[0488] Ink cartridge D17 comprises any of ink cartridges D1 to D16, where, in the state of attachment into said inkjet recording device, in addition to locating said ambient air communicating path above said internal space, said ambient air communicating path is constructed to be sloping downwards towards the communicating side with said ambient air intake part and the communicating side with said internal space.

[0489] Ink cartridge D18 comprises any of ink cartridges D13 to D16, where said film has undergone a waterproofing treatment on at least a part that forms the bottom surface of said ambient air communicating path.

[0490] Ink cartridge E1 comprises an ink cartridge which contains an ink reservoir element which has an internal space that stores the ink and an ambient air communicating path that leads ambient air into said internal space, and an ambient air intake part that takes in the ambient air into said ambient air communicating path and which is located on the side surface of said ink reservoir element, where this is attached into an inkjet recording device that performs recording by discharging said ink,

and where, in the state of attachment into said inkjet recording device, not only is said ambient air communicating path located above said internal space, said ambient air communicating path is constructed such that it slopes downwards towards the communicating side with said internal space from the communicating side with said ambient air intake path.

[0491] Ink cartridge E2 comprises ink cartridge E1, where said ink reservoir element contains a frame member having an opening connecting to said internal space and a film to cover said opening which is fixed to the periphery of said opening, and one surface of said ambient air communicating path is formed by said film.

[0492] Ink cartridge E3 comprises an ink cartridge which contains an ink reservoir element which has an internal space that stores the ink and an ambient air communicating path that leads ambient air into said internal space, and an ambient air intake part that takes in the ambient air into said ambient air communicating path and which is located on the side surface of said ink reservoir element, where this is attached into an inkjet recording device that performs recording by discharging said ink, and where said ink reservoir element has a frame member having an opening that is connected to said internal space and a film that covers said opening and which is fixed to the periphery of said opening, and one surface of said ambient air communicating path is formed by said film.

[0493] Ink cartridge E4 comprises ink cartridge E3, where, in the state of attachment into said inkjet recording device, in addition to locating said ambient air communicating path above said internal space, said ambient air communicating path is constructed to be sloping downwards towards the communicating side with said ambient air intake part and the communicating side with said internal space.

[0494] Ink cartridge E5 comprises any of ink cartridges E2 to E4, where said film has undergone a water-proofing treatment on at least a part that forms the bottom surface of said ambient air communicating path.

[0495] Ink cartridge E6 comprises any of ink cartridges E1 to E5, where said ink reservoir element is constructed to have a first surface and a second surface that are mutually opposing and a side surface that connects the first surface and the second surface; where said ambient air intake part is located on said side surface of said ink reservoir element; said ambient air communicating path has a first communicating chamber that is connected to said ambient air intake part, a second communicating chamber that is connected to said internal space, and a connection path that connects said second communicating chamber and said first communicating chamber; said first communicating chamber and said second communicating chamber are formed as a space such that the bottom surface is positioned on the side of said first surface and the top surface is positioned on the side of said second surface; where the first hole that connects said first communicating chamber and said ambient air intake part is located in a position that is separated from the bottom surface of said first communicating chamber; and further, where the second hole that connects said connection path and said second communicating chamber is located in a position that is separated from the top surface of said second communicating chamber.

[0496] Ink cartridge E7 comprises ink cartridge E6, where, when using said first surface as the loading surface, said first hole is positioned above said second hole, and further, when using said second surface as the loading surface, said second hole is positioned above said first hole.

[0497] Ink cartridge E8 comprises ink cartridges E6 and E7, where said first hole is located in a position adjacent to the top surface of said first communicating chamber in addition to opening a hole in the side wall surface of said first communicating chamber.

[0498] Ink cartridge E9 comprises ink cartridges E6 to E8, where said second hole is located in a position adjacent to the top surface of said second communicating chamber in addition to opening a hole in the side wall surface of said second communicating chamber.

[0499] Ink cartridge E10 comprises any of ink cartridges E6 to E9, where said second communicating chamber has at least two holes with the third hole and fourth hole, which connect, said second communicating chamber and said internal space.

[0500] Ink cartridge E11 comprises ink cartridge E10, where in addition to having a partition plate to partition said first chamber and said second chamber in said internal space, the top surface of said second communicating chamber is constructed such that it overlaps with said partition plate, said third hole opens in the side wall surface of said communicating chamber, and said fourth hole opens into the top surface of said communicating chamber.

[0501] Ink cartridge E12 comprises ink cartridge E10, where said fourth hole is positioned within the angle part of said top surface, and opens onto the angle part which is positioned farthest away from said second hole.

[0502] Ink cartridge E13 comprises ink cartridge E10, where, in the state of attachment into said inkjet recording device, said fourth hole is positioned at the topmost position within said second communicating chamber.

[0503] Ink cartridge E14 comprises any of ink cartridges E10 to E13, where the hole area of said second hole is a smaller area than the hole area of said third hole and of said fourth hole.

[0504] Ink cartridge E15 comprises any of ink cartridges E10 to E14, where the path cross-sectional area of said connection path is a smaller area than the hole area of said third hole and said fourth hole.

[0505] Ink cartridge E16 comprises any of ink cartridges E6 to E15, where the hole area of said second hole is a smaller area than the hole area of said first hole.

[0506] Ink cartridge E17 comprises any of ink cartridges E1 to E16, where the path cross-sectional area of said connection path is a smaller area than the hole area of

said first hole.

[0507] Ink cartridge E18 comprises any of ink cartridges E6 to E17, where in addition to forming said frame member using the top surface of said first communicating chamber and the side wall surface of said first communicating chamber, the bottom surface of said first communicating chamber is formed using said film.

[0508] Ink cartridge E19 comprises any of ink cartridges E6 to E18, where in addition to forming said frame member using the top surface of said second communicating chamber and the side wall surface of said second communicating chamber, the bottom surface of said second communicating chamber is formed using said film.

[0509] Ink cartridge E20 comprises ink cartridge E10, where said third hole is located in a position that is adjacent to the bottom surface of said second communicating chamber as well as opening into the side wall surface of said second communicating chamber, and one part of the opening periphery of said third hole is formed by said film.

[0510] Ink cartridge F1 comprises an ink cartridge which contains an ink reservoir element having an internal space to store the ink and which is attached into an inkjet recording device that performs recording by discharging said ink, where there is an ink supply hole that supplies the ink that is stored within said internal space to said inkjet recording device and which is located on the side surface of said ink reservoir element, an ink supply chamber that is connected to said ink supply hole and which is formed through a partition using the partition wall within said internal space, and an ink communicating hole that connects said ink supply chamber with said internal space and which opens into said partition wall, where, when in the state of attachment into said inkjet recording device, said ink communicating hole is positioned lower than said ink supply hole.

[0511] Ink cartridge F2 comprises ink cartridge F1, where said ink communicating hole is constructed such that it is positioned to be separated by a specific spacing from the bottom surface of said internal space in the state where it is attached into said inkjet recording device.

[0512] Ink cartridge F3 comprises ink cartridges F1 and F2, where, when in the state when attached into said inkjet recording device, not only is there a concave part where one part of the wall part that is the bottom surface of said internal space forms a concave shape, said concave part is positioned to be lower than said ink communicating hole.

[0513] Ink cartridge F4 comprises ink cartridge F3, where said ink communicating hole is constructed to be positioned within the space that is formed by said concave part.

[0514] Ink cartridge F5 comprises ink cartridges F1 and F2, where, when in the state of attachment into said inkjet recording device, the wall part that is the bottom surface of said internal space is formed as a stepped part, and the lowest step within said stepped part is positioned such that it is positioned below said ink communicating hole.

[0515] Ink cartridge F6 comprises ink cartridge F5, where said ink communicating hole is constructed such that it is positioned within the space that is formed by the lowest step within said stepped part.

[0516] Ink cartridge F7 comprises ink cartridges F5 and F7, where the side surface of said ink reservoir element in which said ink supply part is located is positioned to connect the periphery of the first surface and the second surface that mutually oppose said ink reservoir element, and the width dimension of the space that is formed by said concave part and of the space that is formed by the lowest step within said stepped part is smaller than the opposing spacing dimension between at least said first surface and second surface.

[0517] Ink cartridge F8 comprises any of ink cartridges F1 to F7, where said ink supply chamber is formed in a narrowing shape where the cross-sectional area reduces as it separates from said ink supply hole.

[0518] Ink cartridge F9 comprises any of ink cartridges F1 to F8, where said partition wall is connected to the wall part that is the bottom surface of said internal space when in the state of attachment into said inkjet recording device, and is formed to be sloped upwards from said wall part.

[0519] Ink cartridge F10 comprises ink cartridge F9, where said ink communicating hole is formed in said partition wall to be sloped upwards from said wall part.

[0520] Ink cartridge F11 comprises any of ink cartridges F5 to F10, where there is a rotating member that rotates according to the reduction in said ink and which is axially supported within said internal space, and one part of said rotating member is constructed such that it is positioned within the space that is formed by the stepped part that is adjacent to said lowest step which is said stepped part.

[0521] Ink cartridge F12 comprises any of ink cartridges F1 to F11, where, by attaching it to said inkjet recording device, there is an ink supply part that supplies the ink that is stored within said internal space to said inkjet recording device via said ink supply hole and which is created on the side surface of said ink reservoir element.

[0522] Ink cartridge G1 comprises an ink cartridge that has an ink reservoir element that forms an ink reservoir chamber to store the ink, and a rotating member that rotates along with the reduction in ink and which is constructed such that it can rotate within the ink reservoir chamber, where said rotating member has a light blocking part that is displaced by this rotation, and within said ink reservoir element, there is a path that is positioned such that it can displace said light blocking part by the rotating surface of said rotating member and the pair of horizontal wall surfaces, and there is a detected part that is irradiated by light from the outside when attached into the inkjet recording device, where said detected part has a pair of second intervals that are connected to a pair of first intervals which are formed between said light blocking part and said pair of wall surfaces respectively, and

where the spacing of said second spacing is narrower than said first spacing.

[0523] Ink cartridge G2 comprises ink cartridge G1, where said detected part has a first wall that is thicker than said light blocking part as well as which extends in parallel to said rotating surface and which is positioned between said pair of wall surfaces, and where said pair of second intervals is formed between said pair of wall surfaces and said first wall.

[0524] Ink cartridge G3 comprises ink cartridge G2, where said detected part has a bottom surface that connects the bottom part of said pair of wall surfaces and on which said first wall is formed, where this bottom surface is constructed to slope downwards towards the lower side of said ink reservoir chamber side.

[0525] Ink cartridge G4 comprises ink cartridge G3, where the point where said first wall and said bottom surface intersect is formed in a cross-sectional square shape.

[0526] Ink cartridge G5 comprises ink cartridge G4, where there is an ink supply part to supply ink to the inkjet recording device within said ink reservoir chamber which is formed in said ink reservoir chamber that is lower than the bottom surface of said detected part, and a second wall that extends towards said ink supply part side from the position that connects said first wall and which is formed from the inner surface of said ink reservoir element joins the ink supply part and the bottom surface of said detected part.

[0527] Ink cartridge G6 comprises ink cartridge G5, where the point where said second wall and the inner surface of said ink reservoir element intersect are formed in a cross-section square shape.

[0528] Ink cartridge G7 comprises ink cartridges G5 and G6, where the inner surface of said ink reservoir element which forms said second wall has a sloped surface that slopes downwards towards said ink supply part side from said detected part side.

[0529] Ink cartridge G8 comprises any of ink cartridges G1 to G7, where said rotating member has said light blocking part, a balance part that is positioned on the opposite side of this light detecting part, and a connecting part that has a fixed support point that connects the balance part and the light blocking part, where of said rotating member, at least said balance part is constructed out of a material that has a smaller specific gravity that that of the ink.

[0530] Ink cartridge G9 comprises ink cartridge G8, where said balance part is constructed of polypropylene.

[0531] Ink cartridge G10 comprises ink cartridges G1 to G9, where said detected part has a top surface that is connected to the top point of said pair of wall surfaces and which is arranged opposing said bottom surface, where this top surface is arranged in a position that is adjacent to said light blocking part.

[0532] Ink cartridge G11 comprises an ink cartridge that has an ink reservoir element that forms an ink reservoir chamber to store the ink, and a rotating member that rotates along with the reduction in ink and which is constructed such that it can rotate within the ink reservoir chamber, where said rotating member has a light blocking part that is displaced by this rotation, and within said ink reservoir element, there is a path that is positioned such that it can displace said light blocking part by the rotating surface of said rotating member and the pair of horizontal wall surfaces, and there is a detected part that is irradiated by light from the outside when attached into the inkjet recording device, where said detected part has a pair of liquid crystal guide paths that are connected to the pair of first intervals respectively that are formed between said light blocking part and said pair of wall surfaces, where said pair of liquid crystal guide paths pull the ink that is remaining in said first interval by capillary action.

[0533] Ink cartridge packaging unit H1 comprises an ink cartridge packaging unit containing an ink cartridge that has an ink reservoir element with an internal space in one part of which ink is stored and which is attached such that it is removable from the inkjet recording device and a packaging bag that has flexibility and gas barrier properties and which contains this ink cartridge, where said ink reservoir element has a frame member with a first opening that is connected to said internal space, a first film that has flexibility and gas barrier properties which covers the first opening and which is fixed to the periphery of this first opening, and a first pressure space in which the pressure has been reduced to be lower than atmospheric pressure and which is a space other than the space in which the ink is stored among said internal space, where the inside of said packaging unit has the second pressure in which the pressure has been reduced to be lower than said first pressure.

[0534] Ink cartridge packaging unit H2 comprises ink cartridge packaging unit H1, where said frame member has a first rib which supports said first film from said internal space side.

[0535] Ink cartridge packaging unit H3 comprises ink cartridge packaging unit H2, where said first film is fixed onto said first rib.

[0536] Ink cartridge packaging unit H4 comprises ink cartridge packaging units H2 and H3, where said ink reservoir element includes a second opening that is connected to said internal space and which is opened in the opposite side to said first opening of said frame member, a second film having flexibility and gas barrier properties that covers the second opening and which is fixed on the periphery of this second opening, and a partition plate that partitions said internal space into the first chamber on said first opening side and the second chamber of said second opening side, where said partition plate has a first rib which supports said first film on said first opening side and a second rib which supports said second film on said second opening side.

[0537] Ink cartridge packaging unit H5 comprises ink cartridge packaging unit H4, where said second film is fixed to said second rib.

[0538] Ink cartridge packaging unit H6 comprises any of ink cartridge packaging units H1 to H5, where said internal space has an ink space in at least one part of which the ink is stored, and an ambient air communicating space which connects this ink space and the outer part, and where said reduced pressure space includes said ambient air communicating space.

[0539] Ink cartridge packaging unit manufacturing method H7 comprises an inkjet cartridge that has an ink reservoir element with an internal space in one part of which ink is stored and which is attached such that it is removable from the inkjet recording device and a manufacturing method for an inkjet cartridge packaging bag that has flexibility and gas barrier properties and which contains this ink cartridge, where there is a preparatory process to prepare said inkjet reservoir element having a frame member with a first opening which is connected to said internal space and a first film with flexibility and gas barrier properties that covers the first opening and which is fixed on the periphery of this first opening; an ink injection process to reduce the pressure to be a pressure that is lower than atmospheric pressure in advance in said internal space which is in said ink reservoir element which was prepared by the preparatory process and to inject ink such that the reduced pressure space that was created by the first pressure that is lower than atmospheric pressure remains within said internal space; a storage process to store said ink cartridge which has been filled with ink by this ink injection process inside said packaging bag; and a packaging space pressure reduction process to reduce the second pressure to be lower than the first pressure within said packaging bag in which said ink cartridge has been stored by this storage process.

[0540] Ink cartridge packaging unit manufacturing method H8 comprises manufacturing method for an ink cartridge packaging unit H7, where said ink injection process has a post-pressure reduction process to reduce the third pressure in said reduced pressure space to be lower than said first pressure and higher than said second pressure.

[0541] Ink cartridge packaging unit manufacturing method H9 comprises manufacturing methods for an ink cartridge packaging unit H7 and H8, where said preparatory process includes a molding process to mold said frame member and said ink reservoir element that has said frame member and a first rib to support said first film from said internal space, and a first fixing process to fix said first film onto said first rib and onto the periphery of said first opening such that it covers the first opening of said frame member that is molded through this molding process.

[0542] Ink cartridge packaging unit manufacturing method H10 comprises manufacturing method for an ink cartridge packaging unit H9, where, in said molding process, said ink reservoir element that has a second opening which is connected to said internal space and which is opened on the opposite side as said first opening in said frame member is formed, and said preparatory process includes a second fixing process to fix a second film having flexibility and gas barrier properties onto the periphery of said second opening such that it covers the second opening of said frame member which was molded in said molding process.

[0543] Ink cartridge packaging unit manufacturing method H11 comprises manufacturing method for an ink cartridge packaging unit H10, where, in said molding process, said ink reservoir element having a partition plate which partitions said internal space into the first chamber on the side of said first opening and a second chamber on the side of said second opening, said first rib which is formed in said first opening side from this partition plate and a second rib which is formed in said second opening side is molded, and said second fixing process not only fixes said first film onto the periphery of said second opening, it also fixes said second film and said second rib.

[0544] Ink cartridge I1 comprises an ink cartridge with an ink reservoir chamber to store the ink and an ink reservoir element with an ink supply path that connects to this ink reservoir chamber and which is attached such that it can be removed from an inkjet recording device, where a first insertion path is formed into which the hollow ink extraction member can be inserted in order to extract the ink and which is attached to said inkjet recording device, there is an elastic member that has elasticity in order to seal said ink extraction member which has been inserted into the first insertion path; a valve member that is attached closer to said ink reservoir chamber than said elastic member within said ink supply path, which closes said first insertion path by coming into contact with said elastic member when the ink cartridge is removed from said inkjet recording device, and which allows the supply of ink from said ink reservoir chamber into said ink extraction member by coming into contact with the edge part of said ink extraction member when the ink cartridge is attached to said inkjet recording device; and a cap to prevent removal of said elastic member from the opposite side of said ink reservoir chamber side, where this cap has a second insertion path into which said ink extraction member is inserted before said first insertion path and which extends along the same axis as said first insertion path, an inner tubular part that has this second insertion path inside and in which the opening diameter of the edge part of said first insertion path side of this second insertion path is constructed to be smaller than the opening diameter on the side into which said ink extraction member is inserted into said first insertion path, a first outer tubular part which encloses this inner tubular part, a connector part to connect this first outer tubular part and said inner tubular part on the side in which said ink extraction member is inserted, and an ink storage part to store the ink that flows down from between said first insertion path and the edge part of said inner tubular party and which is formed to be surrounded by this connector part, said first outer tubular part and said inner tubular part.

[0545] Ink cartridge I2 comprises ink cartridge I1, where said cap contains a flange part that is in contact with the surface on the side into which said ink extraction member is inserted of said elastic member and which is formed on the edge part of said first insertion path side of said first outer tubular part, and a second outer tubular part which extends along the side of said ink reservoir chamber following the outer periphery surface of said elastic member from the edge of this flange part.

[0546] Ink cartridge I3 comprises ink cartridge I2, where said ink reservoir element has a tubular ink supply part on which is formed said ink supply path, and a protrusion is formed on the outer periphery surface of this ink supply path which protrudes towards the outside, and where said second outer tubular part not only extends along the side of said ink reservoir chamber and encloses said elastic member and said ink supply part, but a mating part is also formed into which said protrusion can be mated.

[0547] Ink cartridge I4 comprises ink cartridges I2 and I3, where there is a notched part formed in said second outer tubular part which extends towards said flange part from the edge part of said ink reservoir chamber side.

[0548] Ink cartridge 15 comprises any of ink cartridges 11 to 14, where at least one part of said first insertion path is formed in a tapered form when viewed from the cross-section that narrows in diameter towards the direction into which said ink extraction member is inserted.

[0549] Ink cartridge I6 comprises any of ink cartridges I1 to I4, where at least one part of said first insertion path is formed in a stepped and tapered form when viewed from the cross-section that narrows in diameter towards the direction into which said ink extraction member is inserted.

[0550] Ink cartridge I7 comprises any of ink cartridges I1 to I6, where at least one part of said second insertion path is formed in a tapered form when viewed from the cross-section that narrows in diameter towards the direction into which said ink extraction member is inserted.

[0551] Ink cartridge I8 comprises any of ink cartridges I3 to I7, where said elastic member contains a first press-fit part that is press fit into the space that is surrounded by the edge part of the opposite side to said ink reservoir chamber in said ink supply part, said second outer tubular part and said flange part, and a second press-fit part that is press fit into said first insertion path and which protrudes into the side of said first insertion path from said first press-fit part.

[0552] Ink cartridge J1 comprises an ink cartridge which not only has an ink reservoir chamber to store the ink inside but which also has a side surface which extends in the vertical direction when the ink cartridge has been attached into the inkjet recording device, and which can be attached into said inkjet recording device such that it can be removed, where, on said side surface, there is an ink supply part to supply the ink that is stored within said ink reservoir chamber to said inkjet recording device, an ambient air intake part to take in the ambient air into said ink reservoir chamber, and a detected part which is irradiated by the light emitted from the optical senor which is placed in said inkjet recording device in order to detect the amount of ink remaining within said ink reservoir chamber, where not only is said ambient air intake part positioned higher than said ink supply part, said detected part is also positioned to be higher than said ink supply part and lower than said ambient air intake part.

[0553] Ink cartridge J2 comprises ink cartridge J1, where there is a rotating member having a light blocking part which is displaced by rotation and which rotates according to the reduction in ink and which is placed inside said ink reservoir element, and where said detected part forms a path that is positioned such that it can move said light blocking member using one part of the wall surface that demarcates said ink reservoir chamber, and by detecting the position of said light blocking part using said optical sensor, the amount of ink remaining within said ink reservoir chamber can be detected.

[0554] Ink cartridge J3 comprises ink cartridge J2, where said rotating member not only has said light blocking part on one edge side but it also has a balance part on the other side, and it rotates about the pivot point between said light blocking part and said balance part, and where said balance part is displaced upwards through a buoyancy action that is stronger than gravity when the entirety is positioned within the ink, and it is displaced downwards through a reduction in buoyancy when the ink is reduced and one part is exposed from the ink surface.

[0555] Ink cartridge J4 comprises ink cartridge J3, where there is a path that is formed within said ambient air intake part and a valve member that has a depressed member that is attached inside this path and that is pushed from the side of said inkjet recording device when said ink cartridge has been attached to said inkjet recording device, and by pushing this depressed member, connects said ink reservoir chamber and the outside, and which blocks the connection between said ink reservoir chamber and the outside when said ink cartridge has been removed from said inkjet recording device.

[0556] Ink cartridge J5 comprises any of ink cartridges J1 to J4, where said ink supply part and said detected part protrude from said side surface, and said detected part is attached closer to said side surface side than the leading edge of the protrusion of said ink supply part and said ambient air intake part.

[0557] Ink cartridge J6 comprises ink cartridge J5, where there is an ink reservoir element which forms said ink reservoir chamber and a case to demarcate said side surface in addition to enclosing said ink reservoir element; said ink supply part, said ambient air intake part and said detected part are formed to protrude from said ink reservoir element, and said case has an ink supply part through-hole which protrudes said ink supply part outwards, and a detection window that exposes said ambient air intake port through-hole and said detected part to the outside.

[0558] Ink cartridge J7 comprises ink cartridge J6, where said case has a protruding part that protrudes further outwards than said ink supply part and said ambient air intake part from both sides that sandwich said ink supply part, said detected part and said ambient air intake part.

[0559] Ink cartridge J8 comprises ink cartridge J7, where one side of said protruding part has a mated part that mates into the mating part that is placed on the attachment part of said inkjet recording device.

[0560] Ink cartridge J9 comprises ink cartridge J8, where said mating part is a guide rod that extends along the direction in which said ink cartridge is attached into the attachment part of said inkjet recording device, and said mated part is a guide groove that extends along the direction into which said guide rod is inserted and mated.

[0561] Manufacturing method for an ink cartridge K1 comprises a manufacturing method for an ink cartridge which has an ink reservoir element that has an internal space in at least one part of which the ink can be stored and a case which is composed of multiple structural components and which encloses this ink reservoir element, and which can be attached to an inkjet recording device such that it can be removed, where there is an ink injection process to inject the ink into said internal space, an assembly process to assemble said multiple structural components such that said ink reservoir element can be stored within said case in the state in which the ink has been stored inside said internal space by said ink injection process, and a welding process to weld said multiple structural components together through vibration using ultrasonic waves in the state in which said ink reservoir element has been stored within said case by this assembly process.

[0562] Manufacturing method for an ink cartridge K2 comprises manufacturing method for an ink cartridge K1, where there is a preparatory process to prepare said ink reservoir element which has the frame member having a first opening which is connected to said internal space prior to said ink injection process, the first film having flexibility which covers the first opening and which is fixed to the periphery of this first opening, and the first rib which supports this first film from said internal space side.

[0563] Manufacturing method for an ink cartridge K3 comprises manufacturing method for an ink cartridge K2, where said preparatory process contains a first molding process to mold said ink reservoir element which has said frame member and the first rib which supports said first film from said internal space side, and a first fixing process to fix said first film onto said first rib and onto the periphery of said first opening such that it covers the first opening of said frame member which is molded through this first molding process.

[0564] Manufacturing method for an ink cartridge K4 comprises manufacturing method for an ink cartridge K3, where, in said first molding process, said ink reservoir element having a second opening which connects to said internal space and which is opened on the opposite side as said first opening of said frame member is formed, and there is a second fixing process to fix the second film which has flexibility and gas barrier properties onto the periphery of said second opening such that it covers the second opening of said frame member which is molded through the first molding process.

[0565] Manufacturing method for an ink cartridge K5 comprises manufacturing method for an ink cartridge K4, where, in said first molding process, said ink reservoir element is molded having a partition plate that partitions said internal space into the first chamber on said first opening side and the second chamber on said second opening side, said first rib which is placed on said first opening side from this partition plate and a second rib which is placed on said second opening side, and where said second fixing process not only fixes said second film onto the periphery of said second opening, it also fixes said second film onto said second rib.

[0566] Manufacturing method for an ink cartridge K6 comprises manufacturing methods for an ink cartridge K3 to K5, where said preparatory process includes a second molding process to mold a rotating member having a light blocking part which is displaced by rotation and which rotates said internal space as the ink is reduced, and where, in said first molding process, a path is formed which is positioned such that it can displace said light blocking member and which is placed on said frame member, and said ink reservoir element is molded which has a detected part which is irradiated by the light emitted from the optical sensor which is placed in said inkjet recording device, and said preparatory process includes an attachment process to attach the rotating member which was molded through said second molding process onto said frame member.

[0567] Manufacturing method for an ink cartridge K7 comprises manufacturing method for an ink cartridge K6, where, in said first molding process, said ink reservoir element is molded having an ink supply part to supply the ink within said ink reservoir chamber to said inkjet recording device and which protrudes from the side surface of said frame member, an ambient air intake part which takes ambient air into said ink reservoir chamber and which protrudes in the same direction as said ink supply part from the side surface of said frame member from which this ink supply part protrudes, and said detected part which protrudes in the same direction as said ambient air intake part and said ink supply part protrude from between said ambient air intake part and said ink supply part on the side surface of said frame member from which said ambient air intake part and said ink supply part protrude.

[0568] Manufacturing method for an ink cartridge K8 comprises manufacturing method for an ink cartridge K7, where said preparatory process includes a third molding process to mold said multiple structural components such that the ink supply part through-hole which protrudes said ink supply part outwards, the ambient air intake part through-hole which protrudes said ambient air intake part

outwards and the detection window which exposes said detected part outwards are arranged on one surface of said case; where, in said assembly process, said multiple structural components are assembled as molded by said third molding process such that said ink supply part protrudes outwards from said ink supply part through-hole, said ambient air intake part protrudes outwards from said ambient air intake part through-hole, and said detected part is exposed outwards by said detection window; and where, in said welding process, said multiple structural components are welded together in the part other than the one surface of said case.

[0569] Ink cartridge L1 comprises an ink cartridge which has a case with an ink reservoir chamber to store the ink inside and which can be attached to an inkjet recording device which performs recording by discharging the ink that is stored within said ink reservoir chamber, where there is an ink supply part to supply the ink that is stored within said ink reservoir chamber to said inkjet recording device and which protrudes outwards from one surface of said case, an ambient air intake part which takes ambient air into said ink reservoir chamber and which protrudes outwards towards the same direction as said ink supply part from said one surface of said case, and a pair of protruding part which protrude further outwards than said ink supply part and said ambient air intake part in the same direction as the direction in which said ink supply part and said ambient air intake part protrude, and which is connected to said case; and where said pair of protruding parts are each arranged on both sides sandwiching said ink supply part and said ambient air intake part.

[0570] Ink cartridge L2 comprises ink cartridge L1, where one of said protruding parts has a mated part, which can be mated into the mating part that is placed on the attachment part of said inkjet recording device.

[0571] Ink cartridge L3 comprises ink cartridge L2, where said mating part is a guide rod that extends along the direction in which said ink cartridge is attached into the attachment part of said inkjet recording device, and said mated part is a guide groove that extends in the direction in which said guide rod is inserted and mated.

[0572] Ink cartridge L4 comprises any of ink cartridges L1 to L3, where said case is formed in a truncated box shape containing said one surface; said pair of protruding parts is arranged on both edge parts of said surface sandwiching said ink supply part and said ambient air intake part in the direction in which said ink supply part and said ambient air intake part line up; and the protruding part that is positioned lower in said pair of protruding parts when said ink cartridge is attached into said inkjet recording device has a sloped surface that extends towards the upwards direction from the bottom surface of said case which is separate from said one surface.

[0573] Ink cartridge L5 comprises any of ink cartridges L1 to L4, where there is an ink reservoir element stored within said case and which forms said ink reservoir chamber; said ink supply part and said ambient air intake part are formed to protrude towards the outside from said ink reservoir element; and in said case, there is an ink supply part through-hole which protrudes said ink supply part outwards and an ambient air intake part through-hole which protrudes said ambient air intake part outwards, where both of these are formed on said one surface.

[0574] Ink cartridge L6 comprises ink cartridge L5, where one part of said ink reservoir element protrudes in the same direction as the direction in which said ink supply part and said ambient air intake part protrude from between said ink supply part and said ambient air intake part; there is a detected part which is irradiated by the light that is emitted from the optical sensor that is placed on said inkjet recording device in order to detect the amount of remaining ink; and on said one surface of said case, there is a detection window which opens onto a position that corresponds to said detected part.

[0575] Ink cartridge L7 comprises ink cartridge L6, where, within said ink reservoir chamber, there is a rotating member that has a light blocking part which is displaced by rotation and which rotates according to a reduction in ink; said detected part forms a path that is positioned such that it can displace said light blocking part by one part of the wall surface that demarcates said ink reservoir chamber; and by detecting the position of said light blocking part by said optical sensor, it is possible to detect the amount of ink remaining within said ink reservoir chamber.

(Explanation of References)

[0576] 1 - multifunction device; 1a - front surface; 1b - bottom surface; 2 - receiver; 11 - printer part; 12 - scanner part; 13 - refill unit; 14 - ink cartridge; 15 - document bed; 16 - document cover; 17 - automatic document feeder (ADF); 18 - document tray; 19 - paper ejection tray; 20 - opening/closing cover; 21 - opening; 22 - opening; 23 - slot part; 30 - operation panel; 31 to 34 - operation keys; 35 - liquid crystal display part; 40 - case; 40a - cutout part; 41 - door; 42 - bottom plate part; 42a - bearing part; 43 - side plate part; 44 - ceiling plate part; 44a - rib; 44b swing arm mechanism; 45 - opening; 46 - lock member fitting part; 47 - partition wall part; 48 - needle forming part; 49 - needle; 49a - cutout part; 50 - accommodating chamber (accommodating part); 51 - installation surface; 52 - ink extraction opening; 53 - ink tube; 54 - passage; 55 - protrusion; 56 - back surface; 57 - remaining ink detection sensor; 57a - light emitting part; 57b - light receiving part; 60 - door main body; 60a - claw accommodating part;
60b - slide rail; 60c - claw accommodating part; 60d - claw accommodating part; 60e - pin support hole; 61 - pressing retaining member; 61a - claw; 61b - wall surface; 61c - projecting strip; 62 - door lock member; 62a - main shaft part; 62b - key part; 62c - seat part; 62d - slide groove; 62e - claw; 63 - lock release lever; 63a - supporting pin; 63b - interlocking cam; 64 - rotating shaft part; 65 - pullout member; 65a - extension part; 65b - curved

part; 65c - outer wall surface; 66 - coil spring; 67 - coil spring; 100 - ink reservoir element; 110 - frame part (frame member, portion of ink reservoir element); 111 - ink reservoir chamber (inner space); 111a - first chamber; 111b - second chamber; 112a - first opening (portion of opening, opening region); 112b - second opening (portion of opening; opening region); 113 - first reservoir chamber internal opening (communicating passage linking the first chamber and second chamber); 114 - second reservoir chamber internal opening (communicating passage linking the first chamber and second chamber); 116 - ink supply element; 116a, 116b - protruding part (protrusion); 117 - ambient air intake element; 117a, 117b - protruding part; 120 - ink supply part (portion of ink reservoir element); 130 - ambient air intake part (portion of ink reservoir element); 140 - detection part (portion of ink reservoir element; detected part; irradiated part); 140a, 140b - detection surface (pair of opposed side surfaces); 140c - edge part (edge part where side surface to the front in the installation direction intersects with detection surface); 141 - enclosure part (includes a pair of wall surfaces substantially parallel to the plane of rotation of the light blocking part); 141a - bottom wall (wall forming the bottom surface of the detected part; bottom wall forming the bottom surface of the irradiated part); 141b - side walls (side walls forming a pair of side surfaces of the irradiated part); 141c - inner side wall; 141d - ceiling wall (ceiling wall forming the ceiling surface of the irradiated part); 150 - ink dispensing part (portion of the ink reservoir element); 160 - film (portion of the ink reservoir element; first film (film welded to first opening side); second film (film welded to second opening side)); 200 - case; 200a - push part; 210 - first case member (portion of the case); 210a - largest surface; 210b to 210e - vertical wall part; 211 - case cutout part (portion of the ink supply part through-hole of case); 212 - case cutout part (portion of the ambient air intake part through-hole of case); 213 - case cutout part (portion of detection window of case; portion of cutout forming the detection window on the two opposed side surfaces of the detected part); 211 a, 212a - contact groove; 214a - case projecting part (portion of projecting part of case; other projecting part); 214b - case projecting part (portion of projecting part of case; one projecting part); 214a1, 214b1 - case projecting cutout part; 214a2 - sloping surface; 214b2 - case fitting groove (portion of fitted part of case; portion of guide groove); 215a to 215c - rod member; 216 - first welded part of case; 216a - concave part; 216b - engagement part; 217 - second welded part of case; 217a - latch part; 220 - second case member (portion of case); 220a - largest surface; 220b to 220e - vertical wall part; 221 - case cutout part (portion of ink supply part through-hole of case); 222 - case cutout part (portion of ambient air intake part through-hole of case); 223 - case cutout part (portion of detection window of case; portion of cutout forming the detection window on the two opposed side surfaces of the detected part); 224a - case projecting part (portion of projecting part of case; other projecting part); 224b - case projecting part (portion of projecting part of case; one projecting part); 224a1, 224b1 - case projecting cutout part; 224a2 - sloping surface; 224b2 - case fitting groove (portion of fitted part of case; portion of guide groove); 225a to 225c - fitting hole part; 226 - first welded part of case; 226a - concave part; 226b - engagement part; 227 - second welded part of case; 227a - latch part; 300 - protector; 310 - protector through-hole; 320 - first protector fitting part; 321, 322 - protector vertical wall; 330a, 330b - second protector fitting part; 330a1, 330b1 - protruding part; 330a2, 330b2 - shaft part; 340a, 340b - protector loose insertion part; 400a, 400b - outer circumference welded part (outer frame part; opening edge); 400b1 - portion of wall part of outer circumference welded part; 411a to 417a - inner circumference welded part (rib which supports film; first rib which supports first film); 411b to 417b - inner circumference welded part (rib which supports film; second rib which supports second film); 418a, 418b - linking rib (auxiliary wall part); 420 - supply path forming part; 421 - first supply communicating hole (ink supply hole); 422 - supply partition wall (section wall); 423 - second supply communicating hole (ink communicating hole); 424 - supply recess part (recessed contact part); 424a - concave part space (space formed by recessed contact part); 425 - arm sandwiching part (sandwiching part); 426 - ink supply chamber; 427 - plate part; 428 - plate part; 430 - ambient air communicating passage forming part (ambient air communicating passage); 431 - first ambient air communicating chamber (first communicating chamber which communicates with ambient air intake part); 431a - side wall surface; 432 - second ambient air communicating chamber (second communicating chamber which communicates with inside space); 432a side wall surface; 433 - ambient air connection passage (connection passage); 433a - communicating opening; 433b - communicating opening (second hole linking connection passage with second communicating chamber); 434 - first ambient air communicating hole (first hole linking first communicating chamber with ambient air intake part); 435 - second ambient air communicating hole (third hole linking second communicating chamber and inside space); 436 - third ambient air communicating hole (fourth hole linking second communicating chamber and inside space); 437a - first surface (bottom surface of first communicating chamber; bottom surface of second communicating chamber; bottom surface of ambient air communicating passage; one surface of ambient air communicating passage); 437b - second surface; 438 - plate part; 440 - link forming part (partition plate; supporting plate); 441 - ambient air side linking part (portion of partition plate); 442 - dispensing side linking part (portion of partition plate); 443 to 446 - linking communicating hole (communicating passage linking the first chamber and second chamber); 450 - dispensing passage forming part (injection part); 451 - dispensing cylinder part (ink injection flow path); 451a - opening (opening of ink injection flow path); 451b - bottom part (bottom part of ink injection flow path); 452 - first

dispensing communicating hole (first hole; portion of communicating part); 453 - dispensing partition wall (wall part; portion of communicating part); 453a - dispensing partition wall flow path (connection flow path; portion of communicating part); 454 - second dispensing communicating hole (second hole; portion of communicating part); 460a to 460c - through-hole; 470 - sensor arm (rotating member); 471 - balance part (portion of rotating member; floating part); 472 - attachment part (linking part of rotating member; portion of linking part); 472a - attachment shaft (upper part of shaft); 473 - arm part (light blocking part of rotating member; portion of communicating part; light barrier part); 473a - vertical arm part (portion of light blocking part; portion of linking part); 473b - sloping arm part (portion of light blocking part); 473c - shielding arm part (portion of light blocking part; light barrier part); 473d - rib (portion of light blocking part); 473e1, 473e2 - arm protruding part (portion of light blocking part; light barrier part); 500 - ink supply mechanism; 501 - supply valve member (valve member); 510 - ambient air intake mechanism; 511 - ambient air valve member; 520 - ink dispensing plug; 520a - outside end surface; 600 supply cap (cap); 600a - opening; 601 - supply securing part (second outside cylindrical part); 602 - ink storage part; 603a, 603b - engagement hole (fitting part of second outside cylindrical part); 604a, 604b - supply cap cutout part (cutout part of second outside cylindrical part); 605 - insertion hole (portion of second insertion passage; ink supply opening); 606a - first upper wall; 606b - sloping wall (portion of second insertion passage; inside cylindrical part); 606c - lower wall (linking part); 606d - second upper wall (flange part); 606e - outer circumferential wall (first outside cylindrical part); 607 - ink storing part; 610 - supply joint (elastic member); 611 - outer circumference part of joint (first press-fitting part); 612 - inner circumference part of joint (second press-fitting part); 612a - top surface; 612b - bottom surface; 612c - opening; 612d - insertion passage; 613 - contact part of joint; 613a - tip; 613b - inner circumferential surface; 614 - protruding part of joint; 614a - inner circumferential surface; 614b - stepped surface; 615 - ink flow path (first insertion path into which in extraction member is inserted); 615a - step part flow path (portion of first insertion path); 615b - protruding part flow path (portion of first insertion path); 615c - contact part flow path (portion of first insertion path); 620 - supply valve (portion of valve member); 621 - valve bottom wall; 622 - valve outer circumferential wall; 622a - valve projecting part; 623 - valve guide groove; 624 - valve projecting wall; 625 valve constraining part; 626 - valve hook part; 627 - ink flow path; 628 - valve bearing part; 629 - valve inner circumferential wall; 630 - first supply spring (potion of valve member); 631 spring bottom part; 632 - spring top part; 633 - spring flexible part; 634 - ink flow path; 634a - top part flow path; 634b - flexible part flow path; 634c - bottom part flow path; 640 - supply slider (portion of valve member); 641 - slider outer circumferential wall; 642a, 642b - slider projecting wall; 643 - loose insertion part; 644 - slider platform part; 645 - slider through-hole; 650 - second supply spring (portion of valve member); 651 - spring bottom part; 652 - spring top part; 653 - spring flexible part; 654 - ink flow path; 654a - upper part flow path; 654b - flexible part flow path; 654c - bottom part flow path; 660 - valve seat; 661 - valve seat bottom part; 662 - valve seat bearing part; 662a - valve seat sloping surface; 662b - first valve seat through-hole; 663 - second valve seat through-hole; 664 - valve seat communicating groove; 665 - valve seat projecting part; 670 - check valve; 671 - umbrella part; 671a - linking part; 671 b - wing part; 672- shaft part; 672a - ball part; 680 - cover; 681 - cover outer circumferential wall; 682 - cover top part; 683 - first cover through-hole; 684 - second cover through-hole; 700 - ambient air cap; 701 - ambient air securing part; 702 - ambient air cap bottom part; 703a, 703b - engagement hole; 704a 704b - ambient air cap cutout part; 705 - ambient air cap insertion hole; 710 - ambient air joint; 711 - outer circumferential part of joint; 712 - inner circumferential part of joint; 712a - upper surface; 713 - protruding part of joint; 713a - tip part; 714 - joint skirt part; 715 - joint passage; 720 - ambient air valve (valve member forming ambient air intake path); 721 - valve bottom wall; 721a - valve open part (pushing member providing communication with ambient air intake path); 721b - convex part; 722 - valve outer circumferential wall; 722a - valve projecting part; 723 - valve guide groove; 724 - valve projecting wall; 725 - valve constraining part; 726 - valve hook part; 727 - ink flow path; 728 - valve bearing part; 729 - valve inner circumferential wall; 730 - first ambient air spring; 731 - spring bottom part; 732 - spring top part; 733 - spring flexible part; 734 - ink flow path; 734a - top part flow path; 734b - flexible part flow path; 734c - bottom part flow path; 740 - ambient air slider; 741 - slider outer circumferential surface; 742a, 742b - slider projecting wall; 743 - loose insertion part; 744 - slider platform part; 745 - slider through-hole; 750 - second ambient air spring; 751 - spring bottom part; 752 - spring top part; 753 - spring flexible part; 754 - ink flow path; 754a - top part flow path; 754b - flexible part flow path; 754c - bottom part flow path; 800 - inner circumferential surface of ink supply element (ink supply path); 801 - projecting wall; 801a - stepped surface; 810 - inner circumferential surface of ambient air intake element; 811 - protruding part; 900 - ultrasound welded surface; 910 - pressure reducing device; 911 - suction tube; 912 - suction pump; 920 - ink dispensing needle; 930 - packaging bag; 931 - opening; 940 - pressure reducing device; 941 - suction tube; 942 - suction pump; 960 - ink cartridge installation detection sensor; 970 - control board; 971 - CPU; 972 - ROM; 973 - RAM; 974 - EEPROM; 975 - PC interface; 976 - ink jet printer; 977 - display device (LCD); 978 - interface circuit; 980 - external PC; 1013 - refill unit; 1040 - case; 1041 - door; 1200 - case; 1200α - case; 1210 - first case member (portion of case); 1210a - largest surface; 1210b to 1210e - vertical wall part; 1211 - case cutout part (portion of the ink supply part through-hole of case); 1212 - case cutout part (portion of the ambient air intake part through-hole of case);

1213 - case cutout part (portion of detection window of case; portion of cutout forming the detection window on the two opposed side surfaces of the detected part); 1214a - case projecting part (portion of projecting part of case; other projecting part); 1214b - case projecting part (portion of projecting part of case; one projecting part); 1214a1, 1214b1 - case projecting cutout part; 1214a2 - sloping surface; 1214b2 - case fitting groove (portion of fitted part of case; portion of guide groove); 1215a to 215c - rod member; 1216 - first welded part of case; 1216a - concave part; 1216b - engagement part; 1217 - second welded part of case; 1217a - latch part; 1218 - rib; 1300 - protector; 2040 - case; 2100 - ink reservoir element; 2200 - case; 2210 - first case member (portion of case); 2210a - largest surface; 22106 to 2210e - vertical wall part; 2211 - case cutout part (portion of ink supply part through-hole of case); 2212 - case cutout part (portion of ambient air intake part through-hole of case); 2213 - case cutout part (portion of detection window of case; portion of cutout forming the detection window on the two opposed side surfaces of the detected part); 2214a - case projecting part (portion of projecting part of case; other projecting part); 2214b - case projecting part (portion of projecting part of case; one projecting part); 2214a2 - sloping surface; 2215a to 2215c - rod member; 2216 - first welded part of case; 2216a - concave part; 2216b - engagement part; 2217 - second welded part of case; 2217a - latch part; 2220 - second case member (portion of case); 2220a - largest surface; 2220b to 2220e - vertical wall part; 2221 - case cutout part (portion of ink supply part through-hole of case); 2222 - case cutout part (portion of ambient air intake part through-hole of case); 2223 - case cutout part (portion of detection window of case; portion of cutout forming the detection window on the two opposed side surfaces of the detected part); 2224a - case projecting part (portion of projecting part of case; other projecting part); 2224b - case projecting part (portion of projecting part of case; one projecting part); 2224a2 - sloping surface; 2226 - first welded part of case; 2226a - concave part; 2226b - engagement part; 2227 - second welded part of case; 2227a - latch part; 2040 - case; 2300 - protector; 3013 - refill unit; 3014 - ink cartridge; 3061 - pushing retaining member; 3200 - case; 3130 - through-hole; 3131 - ambient air intake passage; 4014 - ink cartridge; 4120 - ink supply part; 4121 - ink supply opening; 4122 - joint; 4123 - valve; 4124 - spring member; 4125 - section wall; 4130 - through-hole; 4131 - ambient air intake passage; 4132 - seal member; 4140 - detection part; 5014 - ink cartridge; 5120 - ink supply part; 6014 - ink cartridge; 6100 - concave part; 7014 - ink cartridge; 7100 - concave part; 8014 - ink cartridge; 8200a - pushing part; 9014 - ink cartridge; 9100 - seal; 9200a, 9200b - engagement part (first engagement part); 9201a, 9201b - engagement hole (second engagement part); 9300 - ink reservoir element; 9301 - hard part; 9302 - bag element; 9303 - detection part (irradiated part); 9304 - ink supply part; A - direction of rotation of document cover; B - lengthwise direction of first and second case members, lengthwise direction of case, lengthwise direction of ink reservoir element, lengthwise direction of frame part; C - lengthwise direction of protector; D - ink flow path; E - debris; F - ink cartridge installation direction; G1 - direction of rotation of sensor arm (state where buoyancy > gravity at balance part); G2 - direction of rotation of sensor arm (state where buoyancy < gravity at balance part); I - liquid surface of ink; K - ink flow path; L - ambient air intake path; O1 - axial direction of ink supply mechanism; 02 - axial direction of ambient air intake mechanism; P1, P2 - suction pump; Q - centerline of valve seat; R - virtual outer circumferential line of valve seat projecting part; X - prescribed space; p1 - air pressure inside ink reservoir chamber after ink dispensing process (first pressure); p2 - air pressure inside ink reservoir chamber after subsequent pressure reduction process (second pressure); p3 - air pressure in packaging bag after packaging space pressure reduction process (third pressure); t1 - distance between second supply communicating hole and lower side wall of frame part; t2 - distance between second supply communicating hole and lower side wall of supply recess part; t3 - first gap; t4 - second gap; t5 - width of detected part; t6 - diameter of opening of ink supply part; t7 - range within which ink is stored in ink storage part; t8 - needle protrusion distance; t9 - total projection distance of protrusion and case protruding part; t10 - diameter of loose insertion hole of supply cap (diameter of ink supply opening; distance connecting two ends of the ink supply opening in the horizontal direction); t11 - thickness of case projecting part in the widthwise direction (distance connecting two ends of the projecting part in the horizontal direction); t12 - diameter of communicating hole; t13 - width of case projecting part; t14 t15 - width of case in ink cartridge arrangement direction; t16 - gap between needles penetrating into color ink cartridge; t17 - gap between needle penetrating into black ink cartridge and adjacent needle; t18 to t22 - thickness of case members

Claims

1. An ink cartridge comprising:

a case (200, 1200, 2200, 3200) provided with an ink chamber configured to store ink therein, the ink cartridge configured to supply the ink stored in the ink chamber (1111) to an ink jet recording apparatus when the ink cartridge is installed in the ink jet recording apparatus, wherein

the case (200, 1200, 2200, 3200) is shaped in substantially a rectangular solid including an end surface serving as a surface of the rectangular solid,

the end surface serves as a side surface when the ink cartridge is in an installation posture where the ink cartridge is installed in the ink jet

recording apparatus, the end surface including:

an ink supply part (120, 2120) configured to supply the ink in the ink chamber to the ink jet recording apparatus; and
a first projection projecting (214a, 224a, 1214a, 2214a, 2224a) outwardly from the end surface, and

wherein , when the ink cartridge is in the installation posture, at least a part of the first projection is disposed on a line vertically passing through a center of an opening of the ink supply part.

2. The ink cartridge according to claim 1, wherein the first projection (214a, 224a, 1214a, 2214a, 2224a) projects further outwardly than the ink supply part.

3. The ink cartridge according to claim 1 or 2, wherein the ink supply part (120, 2120) projects outwardly from the end surface of the case, and is provided with, at an end portion thereof, an opening through which ink in the ink chamber outflows.

4. The ink cartridge according to one of claims 1 to 3, wherein the first projection (214a, 224a, 1214a, 2214a, 2224a) projects outwardly in the same direction as the ink supply part projects.

5. The ink cartridge according to one of claims 1 to 4, wherein the direction where the ink supply part (120, 2120) and the first projection (214a, 224a, 1214a, 2214a, 2224a) project is a horizontal direction when the ink cartridge is in the installation posture.

6. The ink cartridge according to one of claims 1 to 5, wherein the first projection (214a, 224a, 1214a, 2214a, 2224a) is disposed vertically lower than the ink supply part when the ink cartridge is in the installation posture.

7. The ink cartridge according to one of -claims 1 to 6, wherein the opening of the ink supply part (120, 2120) completely falls within an area occupied by the first projection when the ink cartridge in the installation posture is viewed in a vertical direction.

8. The ink cartridge according to one of -claims 1 to 7, wherein the -surface of the first projection (214a, 224a, 1214a, 2214a, 2224a) which faces the ink supply part is formed flat or recessed.

9. The ink cartridge according to any one of claims 1 through 8, wherein the first projection (214a, 224a, 1214a, 2214a, 2224a) is disposed at a lower end of the case (200, 1200, 2200, 3200) when the ink cartridge is in the installation posture, and
the ink supply part (120, 2120) is disposed in a position closer to the lower end of the case than to an upper end thereof when the ink cartridge is in the installation posture.

10. The ink cartridge according to any one of claims 1 through 9,
wherein
the first projection (214a, 224a, 1214a, 2214a, 2224a) includes an inclined surface (214a2, 224a2, 1214a2, 2214a2, 2224a2) extending upward continuously from a bottom surface of the case in the installation posture.

11. The ink cartridge according to any one of claims 1 through 10, wherein the first projection (214a, 224a, 1214a, 2214a, 2224a) is configured to operate an installation detection switch (960) disposed in the ink jet recording apparatus to detect whether the ink cartridge is installed when the ink cartridge is installed in the ink jet recording apparatus.

12. The ink cartridge according to claim 11, further comprising a light radiated part (140) projecting in the same direction as the first projection (214a, 224a, 1214a, 2214a, 2224a) projects, the light radiated part configured to be radiated with light emitted from an optical sensor (57) provided in the ink jet recording apparatus when the ink cartridge is installed in the inkjet recording apparatus.

13. The ink cartridge according to one of claims -1 to 12, wherein the ink chamber (111) is provided with a movable member (470) configured to move in response to a change of an ink level in the ink chamber, the light radiated part (140) is translucent and is provided with an inner space communicating with the ink chamber, and
at least a part of the movable member is disposed in the inner space of the light radiated part.

14. The ink cartridge according to any one of claims 1 through 13, further comprising an air introducing part (130, 2130) projecting outward from the end surface of the case (200, 1200, 2200, 3200) in the same direction as the ink supply part projects, the air introducing part configured to introduce air into the ink chamber.

15. The ink cartridge according to any one of claims 1 through 14, wherein the end surface includes a second projection disposed at an opposite side of the ink supply part from the first projection.

16. The ink cartridge according to claim 15, wherein the second projection (214b, 224b, 1214b, 2214b, 2224b) includes an engaged portion (214b2, 224b2, 1214b2, 2214b2) configured to be engaged with an engaging portion (55) disposed in the ink jet record-

ing apparatus when the ink cartridge is installed in the ink jet recording apparatus in the installation posture, and
an end of the first projection collides with the engaging portion when the ink cartridge is being installed in the ink jet recording apparatus in an improper posture, which is different from the installation posture.

17. The ink cartridge according to claim 16, wherein the ink jet recording apparatus includes an accommodating portion (50) defining a space corresponding to a contour of the ink cartridge and configured to receive the ink cartridge installed in a horizontal direction, and an extracting member (49) extending along a direction where the ink cartridge is inserted into the accommodating portion, the extracting member configured to extract the ink in the ink chamber when the extracting member is inserted into an opening of the ink supply portion, and
the first projection (214a, 224a, 1214a, 2214a, 2224a) is configured so that, in a situation where the first projection collides with the engaging portion while the ink cartridge is being inserted in the improper posture, a total length of the first projection and the engaging portion is longer than the length of the extracting member.

18. The ink cartridge according to any one of claims 1 through 17, wherein the ink jet recording apparatus includes an accommodating portion (50) defining a space corresponding to a contour of the ink cartridge and configured to receive the ink cartridge installed in a horizontal direction, and an extracting member (49) extending along a direction where the ink cartridge is inserted into the accommodating portion, the extracting member configured to extract the ink in the ink chamber when the extracting member is inserted into an opening of the ink supply portion, and the first projection (214a, 224a, 1214a, 2214a, 2224a) projects in the same direction as the extracting member extends when the ink cartridge is installed in the ink jet recording apparatus.

19. An ink jet recording apparatus including the ink cartridge according to any of claims 1 to 18.

20. An ink jet recording apparatus including the ink cartridge according to any one of claims 11 through 18, the ink jet recording apparatus comprising:

a recording device (11) configured to perform recording by ejecting ink supplied from the ink cartridge;
an installation detection device (970) configured to detect whether the ink cartridge is installed based on output signals from the installation detection switch (960) and the optical sensor (57); and
a controlling device (970) configured to control the recording device, and
wherein the installation detection device detects that the ink cartridge is installed when the installation detection device recognizes that the installation detection switch has been operated and an amount of light that the optical sensor received has been changed, and
the controlling device allows the recording device to perform recording when the installation detection device detects that the ink cartridge is installed.

Patentansprüche

1. Tintenkartusche mit:

einem Gehäuse (200, 1200, 2200, 3200), das mit einer Tintenvorratskammer versehen ist, die so konfiguriert ist, dass sie darin Tinte speichert, wobei die Tintenkartusche so konfiguriert ist, dass sie die in der Tintenvorratskammer (1111) gespeicherte Tinte zu einer Tintenstrahlaufzeichnungsvorrichtung zuführt, wenn die Tintenkartusche in der Tintenstrahlaufzeichnungsvorrichtung installiert ist, wobei das Gehäuse (200, 1200, 2200, 3200) als ein im Wesentlichen rechteckiger Festkörper einschließlich einer Endfläche geformt ist, die als eine Fläche des rechteckigen Festkörpers dient, wobei
die Endfläche als eine Seitenfläche dient, wenn die Tintenkartusche in einer Installationsstellung ist, in der die Tintenkartusche in der Tintenstrahlaufzeichnungsvorrichtung installiert ist, wobei die Endfläche folgendes aufweist:

einen Tintenzuführteil (120, 2120), der so konfiguriert ist, dass er die Tinte in der Tintenvorratskammer zu der Tintenstrahlaufzeichnungsvorrichtung zuführt; und
einen ersten Vorsprung (214a, 224a, 1214a, 2214a, 2224a), der von der Endfläche nach außen vorsteht, und

wobei, wenn die Tintenkartusche in der Installationsstellung ist, zumindest ein Teil des ersten Vorsprungs an einer Linie angeordnet ist, die vertikal durch eine Mitte einer Öffnung des Tintenzuführteils hindurch tritt.

2. Tintenkartusche gemäß Anspruch 1, wobei der erste Vorsprung (214a, 224a, 1214a, 2214a, 2224a) weiter als der Tintenzuführteil nach außen vorsteht.

3. Tintenkartusche gemäß Anspruch 1 oder 2, wobei der Tintenzuführteil (120, 2120) von der Endfläche des Gehäuses nach außen vorsteht und an seinem

Endabschnitt mit einer Öffnung versehen ist, durch die die Tinte in der Tintenvorratskammer heraus strömt.

4. Tintenkartusche gemäß einem der Ansprüche 1 bis 3, wobei der erste Vorsprung (214a, 224a, 1214a, 2214a, 2224a) in derselben Richtung nach außen vorsteht, in der der Tintenzuführteil vorsteht.

5. Tintenkartusche gemäß einem der Ansprüche 1 bis 4, wobei die Richtung, in der der Tintenzuführteil (120, 2120) und der erste Vorsprung (214a, 224a, 1214a, 2214a, 2224a) vorstehen, eine horizontale Richtung ist, wenn die Tintenkartusche in der Installationsstellung ist.

6. Tintenkartusche gemäß einem der Ansprüche 1 bis 5, wobei der erste Vorsprung (214a, 224a, 124a, 2214a, 2224a) vertikal niedriger als der Tintenzuführteil angeordnet ist, wenn die Tintenkartusche in der Installationsstellung ist.

7. Tintenkartusche gemäß einem der Ansprüche 1 bis 6, wobei die Öffnung des Tintenzuführteils (120, 2120) bei Betrachtung in einer vertikalen Richtung vollständig innerhalb eines Bereiches fällt, der durch den ersten Vorsprung eingenommen wird, wenn die Tintenkartusche in der Installationsstellung ist.

8. Tintenkartusche gemäß einem der Ansprüche 1 bis 7, wobei die Fläche des ersten Vorsprungs (214a, 224a, 1214a, 2214a, 2224a), die dem Tintenzuführteil zugewandt ist, eben oder ausgespart ausgebildet ist.

9. Tintenkartusche gemäß einem der Ansprüche 1 bis 8, wobei der erste Vorsprung (214a, 224a, 1214a, 2214a, 2224a) an einem unteren Ende des Gehäuses (200, 1200, 2200, 3200) angeordnet ist, wenn die Tintenkartusche in der Installationsstellung ist, und
der Tintenzuführteil (120, 2120) in einer Position angeordnet ist, die dem unteren Ende des Gehäuses näher ist als dem oberen Ende davon, wenn die Tintenkartusche in der Installationsstellung ist.

10. Tintenkartusche gemäß einem der Ansprüche 1 bis 9, wobei
der erste Vorsprung (214a, 224a, 1214a, 2214a, 2224a) eine geneigte Fläche (214a2, 224a2, 1214a2, 2214a2, 2224a2) aufweist, die sich von einer Bodenfläche des Gehäuses in der Installationsstellung kontinuierlich nach oben erstreckt.

11. Tintenkartusche gemäß einem der Ansprüche 1 bis 10, wobei der erste Vorsprung (214a, 224a, 1214a, 2214a, 2224a) so konfiguriert ist, dass er einen Installationserfassungsschalter (960) betätigt, der in der Tintenstrahlaufzeichnungsvorrichtung angeordnet ist, um zu erfassen, ob die Tintenkartusche installiert ist, wenn die Tintenkartusche in der Tintenstrahlaufzeichnungsvorrichtung installiert ist.

12. Tintenkartusche gemäß Anspruch 11, des weiteren mit einem mit Licht bestrahlten Teil (140), der in derselben Richtung vorsteht, in der der erste Vorsprung (214a, 224a, 1214a, 2214a, 2224a) vorsteht, wobei der mit Licht bestrahlte Teil so konfiguriert ist, dass er, wenn die Tintenkartusche in der Tintenstrahlaufzeichnungsvorrichtung installiert ist, mit Licht bestrahlt wird, das von einem in der Tintenstrahlaufzeichnungsvorrichtung vorgesehenen optischen Sensor (57) ausgesendet wird.

13. Tintenkartusche gemäß einem der Ansprüche 1 bis 12, wobei die Tintenvorratskammer (111) mit einem bewegbaren Element (470) versehen ist, das so konfiguriert ist, dass es sich als Reaktion auf eine Änderung eines Tintenniveaus in der Tintenvorratskammer bewegt,
der mit Licht bestrahlte Teil (140) lichtdurchlässig ist und mit einem Innenraum versehen ist, der mit der Tintenkammer in Verbindung ist, und
zumindest ein Teil des bewegbaren Elementes in dem Innenraum des mit Licht bestrahlten Teils angeordnet ist.

14. Tintenkartusche gemäß einem der Ansprüche 1 bis 13, des weiteren mit einem Lufteinführteil (130, 2130), der von der Endfläche des Gehäuses (200, 1200, 2200, 3200) in derselben Richtung nach außen vorsteht, in der der Tintenzuführteil vorsteht, wobei der Lufteinführteil so konfiguriert ist, dass er Luft in die Tintenvorratskammer einführt.

15. Tintenkartusche gemäß einem der Ansprüche 1 bis 14, wobei die Endfläche einen zweiten Vorsprung aufweist, der an einer Seite des Tintenzuführteils angeordnet ist, die dem ersten Vorsprung gegenüberliegt.

16. Tintenkartusche gemäß Anspruch 15, wobei der zweite Vorsprung (214b, 224b, 1214b, 2214b, 2224b) einen eingegriffenen Abschnitt (214b2, 224b2, 1214b2, 2214b2) aufweist, der so konfiguriert ist, dass er mit einem in der Tintenstrahlaufzeichnungsvorrichtung angeordneten, eingreifenden Abschnitt (55) in Eingriff gelangt, wenn die Tintenkartusche in der Tintenstrahlaufzeichnungsvorrichtung in der Installationsstellung installiert ist, und ein Ende des ersten Vorsprungs mit dem eingreifenden Abschnitt zusammenstößt, wenn die Tintenkartusche in der Tintenstrahlaufzeichnungsvorrichtung in einer nicht korrekten Stellung installiert ist, die sich von der Installationsstellung unterscheidet.

17. Tintenkartusche gemäß Anspruch 16, wobei die Tintenstrahlaufzeichnungsvorrichtung einen Aufnahmeabschnitt (50), der einen Raum entsprechend einer Kontur der Tintenkartusche definiert und so konfiguriert ist, dass er die in einer horizontalen Richtung installierte Tintenkartusche aufnimmt, und ein Extraktionselement (49) aufweist, das sich entlang einer Richtung erstreckt, in der die Tintenkartusche in dem Aufnahmeabschnitt eingefügt ist, wobei das Extraktionselement so konfiguriert ist, dass es die Tinte in der Tintenvorratskammer extrahiert, wenn das Extraktionselement in eine Öffnung des Tintenzuführteils eingefügt ist, und
der erste Vorsprung (214a, 224a, 1214a, 2214a, 2224a) so konfiguriert ist, dass in einer Situation, in der der erste Vorsprung mit dem eingreifenden Abschnitt zusammenstößt, während die Tintenkartusche in der nicht korrekten Stellung eingefügt ist, eine Gesamtlänge des ersten Vorsprungs und des eingreifenden Abschnitts größer ist als die Länge des Extraktionselements.

18. Tintenkartusche gemäß einem der Ansprüche 1 bis 17, wobei die Tintenstrahlaufzeichnungsvorrichtung einen Aufnahmeabschnitt (50), der einen Raum entsprechend einer Kontur der Tintenkartusche definiert und so konfiguriert ist, dass er die in einer horizontalen Richtung installierte Tintenkartusche aufnimmt, und ein Extraktionselement (49) aufweist, das sich entlang einer Richtung erstreckt, in der die Tintenkartusche in dem Aufnahmeabschnitt eingefügt ist, wobei das Extraktionselement so konfiguriert ist, dass es die Tinte in der Tintenkammer extrahiert, wenn das Extraktionselement in eine Öffnung des Tintenzuführteils eingefügt ist, und
der erste Vorsprung (214a, 224a, 1214a, 2214a, 2224a) in derselben Richtung vorsteht, in der sich das Extraktionselement erstreckt, wenn die Tintenkartusche in der Tintenstrahlaufzeichnungsvorrichtung installiert ist.

19. Tintenstrahlaufzeichnungsvorrichtung mit der Tintenkartusche gemäß einem der Ansprüche 1 bis 18.

20. Tintenstrahlaufzeichnungsvorrichtung mit der Tintenkartusche gemäß einem der Ansprüche 11 bis 18, wobei die Tintenstrahlaufzeichnungsvorrichtung folgendes aufweist:

eine Aufzeichnungsvorrichtung (11), die so konfiguriert ist, dass sie ein Aufzeichnen durch Ausstoßen von Tinte durchführt, die von der Tintenkartusche zugeführt wird;
eine Installationserfassungsvorrichtung (970), die so konfiguriert ist, dass sie auf der Grundlage von Abgabesignalen von dem Installationserfassungsschalter (960) und dem optischen Sensor (57) erfasst, ob die Tintenkartusche installiert ist; und
eine Steuervorrichtung (970), die so konfiguriert ist, dass sie die Aufzeichnungsvorrichtung steuert, und
wobei die Installationserfassungsvorrichtung erfasst, dass die Tintenkartusche installiert ist, wenn die Installationserfassungsvorrichtung erkennt, dass der Installationserfassungsschalter betätigt wurde und eine Lichtmenge geändert wurde, die der optische Sensor aufgenommen hat, und
die Steuervorrichtung der Aufzeichnungsvorrichtung das Durchführen des Aufzeichnens erlaubt, wenn die Installationserfassungsvorrichtung erfasst, dass die Tintenkartusche installiert ist.

Revendications

1. Une cartouche d'encre comprenant :

un boîtier (200, 1200, 2200, 3200) muni d'une chambre d'encre configurée pour y stocker de l'encre, la cartouche d'encre étant configurée pour fournir l'encre stockée dans la chambre d'encre (1111) à un appareil d'enregistrement à jet d'encre lorsque la cartouche d'encre est installée dans l'appareil d'enregistrement à jet d'encre, dans lequel le boîtier (200, 1200, 2200, 3200) est sensiblement sous forme d'un corps tridimensionnel rectangulaire comprenant une surface d'extrémité agissant comme une surface du corps tridimensionnel rectangulaire dans lequel
la surface d'extrémité agissant comme surface latérale lorsque la cartouche d'encre se trouve dans une position d'installation où la cartouche d'encre est installée dans l'appareil d'enregistrement à jet d'encre, la surface d'extrémité comprenant :

une partie d'alimentation d'encre (120, 2120) configurée pour fournir de l'encre se trouvant dans la chambre d'encre à l'appareil d'enregistrement à jet d'encre ; et
une première saillie (214a, 224a, 1214a, 2214a, 2224a) faisant saillie vers l'extérieur à partir de la surface d'extrémité, et

dans laquelle, lorsque la cartouche d'encre se trouve dans une position d'installation, au moins une partie de la première saillie est disposée selon une ligne qui passe verticalement à travers un centre d'une ouverture de la partie d'alimentation d'encre.

2. La cartouche d'encre selon la revendication 1, dans

laquelle la première saillie (214a, 224a, 1214a, 2214a, 2224a) fait saillie vers l'extérieur sur une plus grande distance que la partie d'alimentation d'encre.

3. La cartouche d'encre de la revendication 1 ou 2, dans laquelle la partie d'alimentation d'encre (120, 2120) fait saillie vers l'extérieur à partir de la surface d'extrémité du boîtier, et est munie, au niveau d'une partie d'extrémité de celui-ci, d'une ouverture à travers laquelle l'encre se trouvant dans la chambre d'encre s'écoule.

4. La cartouche d'encre selon l'une quelconque des revendications 1 à 3, dans laquelle la première saillie (214a, 224a, 1214a, 2214a, 2224a) fait saillie vers l'extérieur selon la même direction que fait saillie la partie d'alimentation d'encre.

5. La cartouche d'encre selon l'une des revendications 1 à 4, dans laquelle la direction selon laquelle font saillie la partie d'alimentation d'encre (120, 2120) et la première saillie (214a, 224a, 1214a, 2214a, 2224a) est une direction horizontale lorsque la cartouche d'encre est dans la position d'installation.

6. La cartouche d'encre selon l'une quelconque des revendications 1 à 5, dans laquelle la première saillie (214a, 224a, 1214a, 2214a, 2224a) est disposée verticalement à un niveau plus bas que la partie d'alimentation d'encre lorsque la cartouche d'encre se trouve dans la position d'installation.

7. La cartouche d'encre selon l'une des revendications 1 à 6 dans laquelle l'ouverture de la partie d'alimentation d'encre (120, 2120) se trouve intégralement à l'intérieur d'une zone occupée par la première saillie lorsque la cartouche d'encre se trouve dans la position d'installation lorsqu'on la regarde selon une direction verticale.

8. La cartouche d'encre selon l'une des revendications 1 à 7, dans laquelle la surface de la première saillie (214a, 224a, 1214a, 2214a, 2224a) qui font face à la partie d'alimentation d'encre est formée pour être plane ou en creux.

9. La cartouche d'encre selon l'une quelconque des revendications 1 à 8, dans laquelle la première saillie (214a, 224a, 1214a, 2214a, 2224a) est disposée au niveau d'une extrémité inférieure du boîtier (200, 1200, 2200, 3200) lorsque la cartouche d'encre se trouve dans la position d'installation, et
la partie d'alimentation d'encre (120,2120) est disposée dans une position plus proche de l'extrémité inférieure du boîtier que de l'extrémité supérieure du boîtier lorsque la cartouche d'encre se trouve dans une position d'installation.

10. La cartouche d'encre selon l'une quelconque des revendications 1 à 9, dans laquelle la première saillie (214a, 224a, 1214a, 2214a, 2224a) comprend une surface inclinée (214a2, 224a2, 1214a2, 2114a2, 2224a2) qui s'étend de façon continue vers le haut à partir d'une surface inférieure du boîtier dans la position d'installation.:

11. La cartouche d'encre selon l'une quelconque des revendications 1 à 10, dans laquelle la première saillie (214a, 224a, 1214a, 2214a, 2224a) est configurée pour faire fonctionner un interrupteur de détection d'installation (960) disposé dans l'appareil d'enregistrement à jet d'encre pour détecter si oui ou non la cartouche d'encre est installée lorsque la cartouche d'encre est installée dans l'appareil d'enregistrement à jet d'encre.

12. La cartouche d'encre selon la revendication 11, comprenant en outre une partie illuminée par de la lumière (140) faisant saillie selon la même direction que fait saillie la première saillie (214a, 224a, 1214a, 2214a, 2224a), la partie illuminée par de la lumière étant configurée pour être illuminée par de la lumière émise à partir d'un capteur optique (57) prévu dans l'appareil d'enregistrement à jet d'encre lorsque la cartouche d'encre est installée dans l'appareil d'enregistrement à jet d'encre.

13. La cartouche d'encre selon l'une des revendications 1 à 12, dans laquelle la chambre d'encre (111) est munie d'un organe déplaçable (470) configuré pour se déplacer en réponse à une variation du niveau d'encre dans la chambre d'encre,
la partie illuminée par de la lumière (140) est translucide et est munie d'un espace interne communiquant avec la chambre d'encre, et
au moins une partie de l'organe déplaçable est disposée dans l'espace intérieur de la partie illuminée par de la lumière.

14. La cartouche d'encre selon l'une quelconque des revendications 1 à 13, comprenant en outre une partie d'introduction d'air (130, 2130) faisant saillie vers l'extérieur à partir de la surface d'extrémité du boîtier (200, 1200, 2200, 3200) selon la même direction que fait saillie la partie d'alimentation d'encre, la partie d'introduction d'air étant configurée pour introduire de l'air dans la chambre d'encre.

15. La cartouche d'encre selon l'une quelconque des revendications 1 à 14, dans laquelle la surface d'extrémité comprend une deuxième saillie disposée à un côté opposé de la partie d'alimentation d'encre par rapport à la première saillie.

16. La cartouche d'encre selon la revendication 15, dans laquelle la deuxième saillie (214b, 224b, 1214b,

2224b) comprend une partie destinée à être mise en prise (214b2, 224b2, 1214b2, 2214b2) configurée pour venir en prise avec une partie de mise en prise (55) disposée dans l'appareil d'enregistrement à jet d'encre lorsque la cartouche d'encre est installée dans l'appareil d'enregistrement à jet d'encre selon la position d'installation, et
une extrémité de la première saillie entre en collision avec la partie de mise en prise lors d'une installation de la cartouche d'encre dans l'appareil d'enregistrement à jet d'encre dans une mauvaise position qui est différente de la position d'installation.

17. La cartouche d'encre selon la revendication 16, dans laquelle l'appareil d'enregistrement à jet d'encre comprend une partie de logement (50) définissant un espace correspondant à un contour de la cartouche d'encre et configuré pour recevoir la cartouche d'encre installée selon une direction horizontale, et un organe d'extraction (49) s'étendant selon une direction lorsque la cartouche d'encre est installée dans la partie de logement, l'organe d'extraction étant configuré pour extraire l'encre se trouvant dans la chambre d'encre lorsque l'organe d'extraction est inséré dans une ouverture de la partie d'alimentation d'encre, et
la première saillie (214a, 224a, 1214a, 2214a, 2224a) est configurée de sorte que, dans une situation où la première saillie entre en collision avec la partie de mise en prise lors de l'insertion de la cartouche d'encre dans une mauvaise position, une longueur globale de la première saillie et de la partie de mise en prise étant supérieure à la longueur de l'organe d'extraction.

18. La cartouche d'encre selon l'une quelconque des revendications 1 à 17, dans laquelle l'appareil d'enregistrement à jet d'encre comprend une partie de logement (50) définissant un espace correspondant à un contour de la cartouche d'encre et configuré pour recevoir la cartouche d'encre installée selon une direction horizontale, et un organe d'extraction (49) qui s'étend selon une direction lorsque la cartouche d'encre est insérée dans la partie de logement, l'organe d'extraction étant configuré pour extraire l'encre se trouvant dans la chambre d'encre lorsque l'organe d'extraction est inséré dans une ouverture de la partie d'alimentation d'encre, et
la première saillie (214a, 224a, 1214a, 2214a, 2224a) fait saillie selon la même direction d'extension que l'organe d'extraction lorsque la cartouche d'encre est installée dans l'appareil d'enregistrement à jet d'encre.

19. Un appareil d'enregistrement à jet d'encre comprenant la cartouche d'encre selon l'une quelconque des revendications 1 à 18.

20. Un appareil d'enregistrement à jet d'encre comprenant la cartouche à jet d'encre selon des revendications 11 à 18, l'appareil d'enregistrement à jet d'encre comprenant :

un dispositif d'enregistrement (11) configuré pour effectuer un enregistrement par éjection de l'encre fournie à partir de la cartouche d'encre ;
un dispositif de détection d'installation (970) configuré pour détecter l'installation de la cartouche d'encre sur la base de signaux de sortie de l'interrupteur de détection d'installation (960) et du capteur optique (57), et
un dispositif de commande (970) configuré pour commander le dispositif d'enregistrement, et
dans lequel le dispositif de détection d'installation détecte l'installation de la cartouche d'encre lorsque le dispositif de détection d'installation reconnaît l'actionnement de l'interrupteur de détection d'installation et une quantité de lumière reçue par le capteur optique à changer, et
le dispositif de commande permet au dispositif d'enregistrement d'effectuer l'enregistrement lorsque le dispositif de détection d'installation détecte l'installation de la cartouche d'encre.

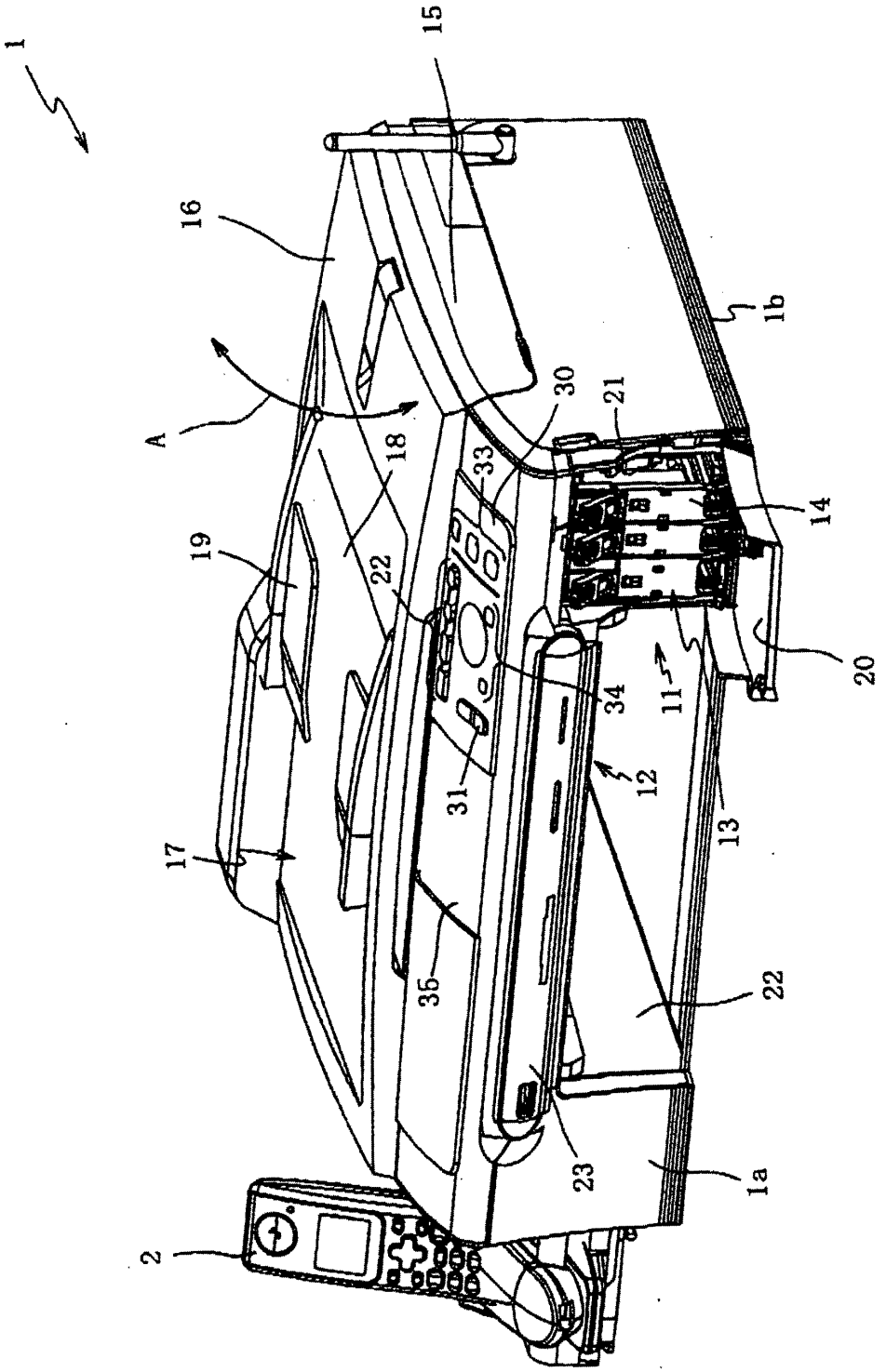

Fig.1

Fig.2

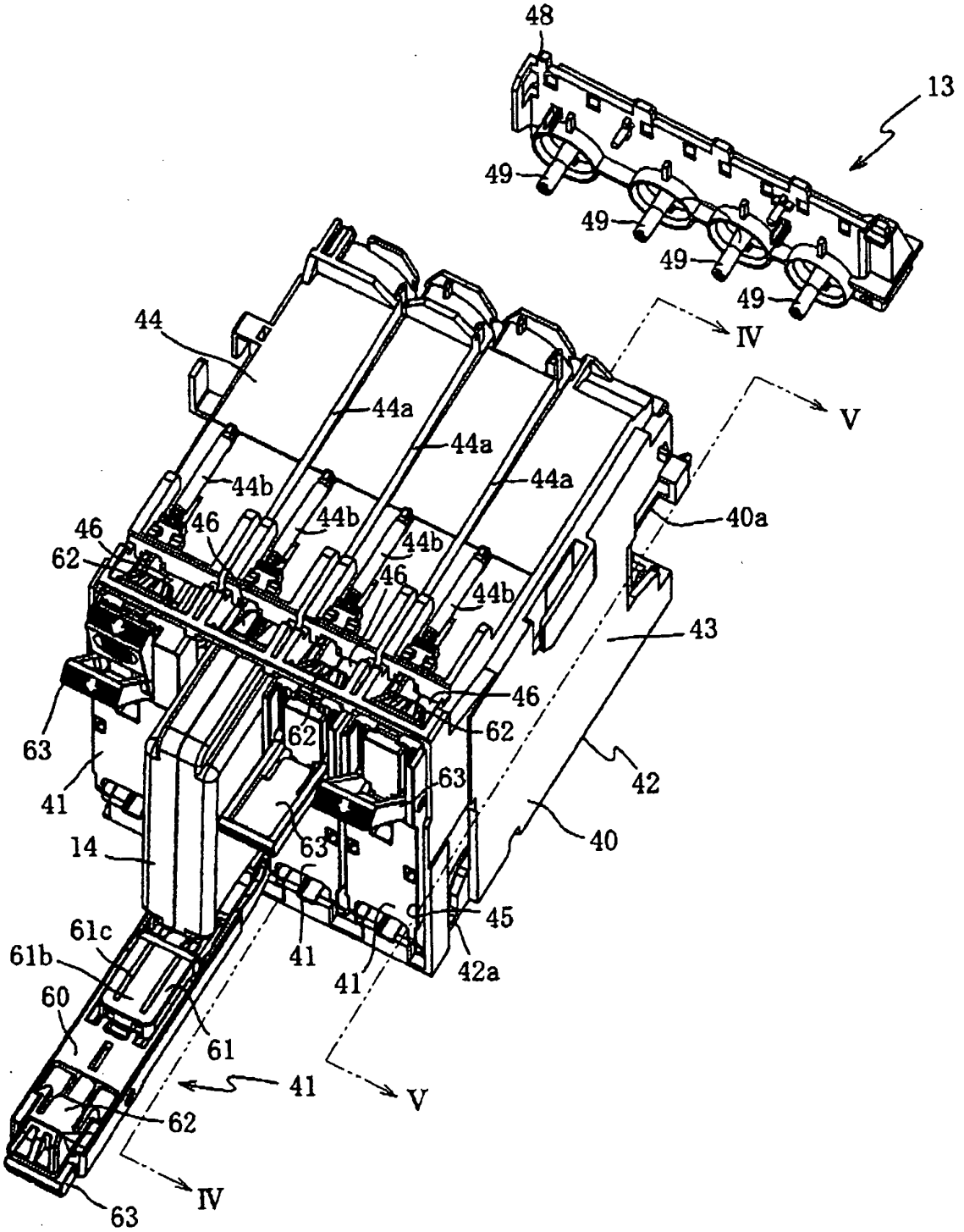
48
13
49
49
49
49
44
44a
44a
44a
44b
44b
44b
44b
46
46
46
46
62
62
62
63
63
63
63
40a
43
42
40
41
41
41
41
14
45
42a
61c
61b
60
61
IV
IV
V
V

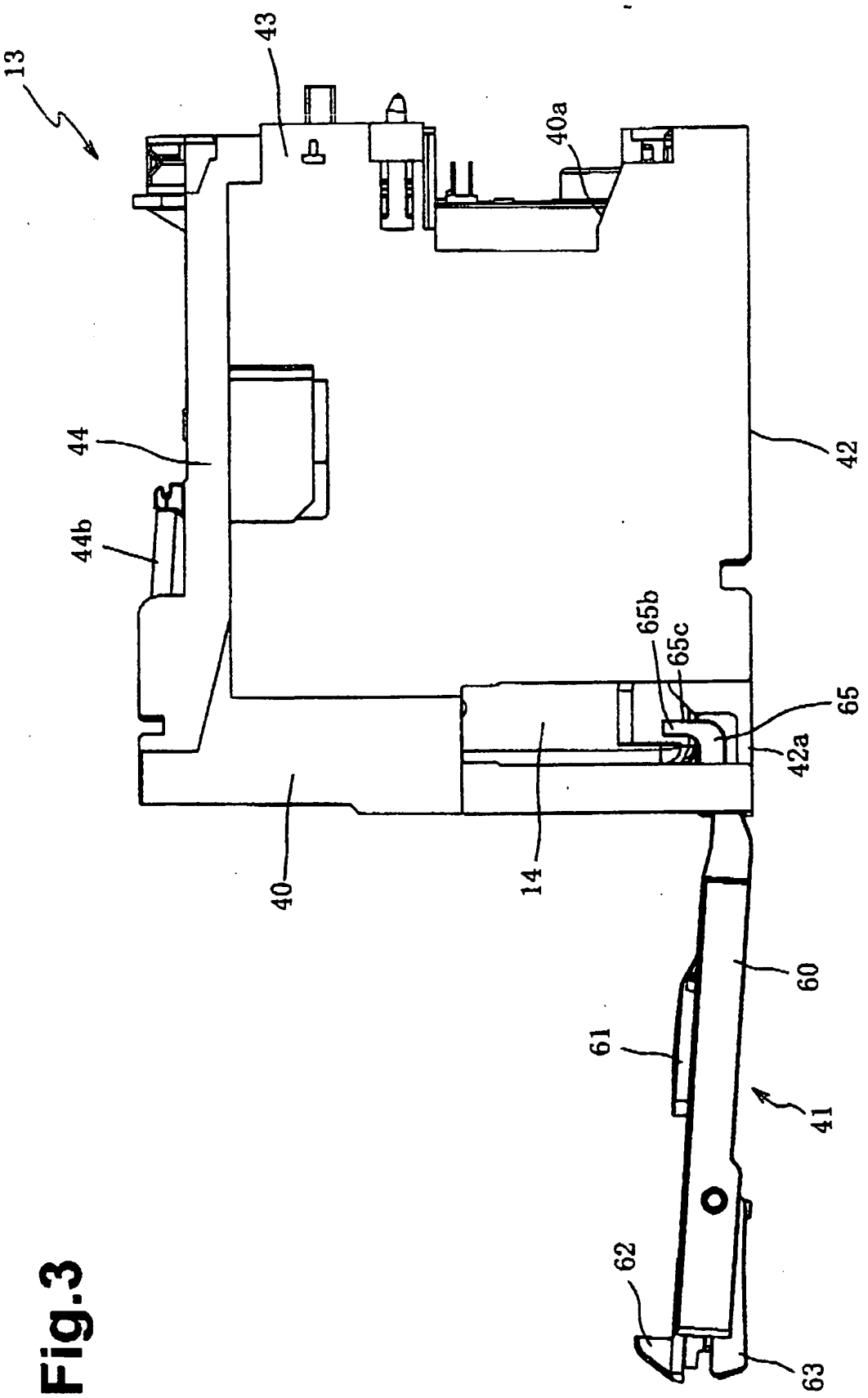

Fig.3

Fig.4

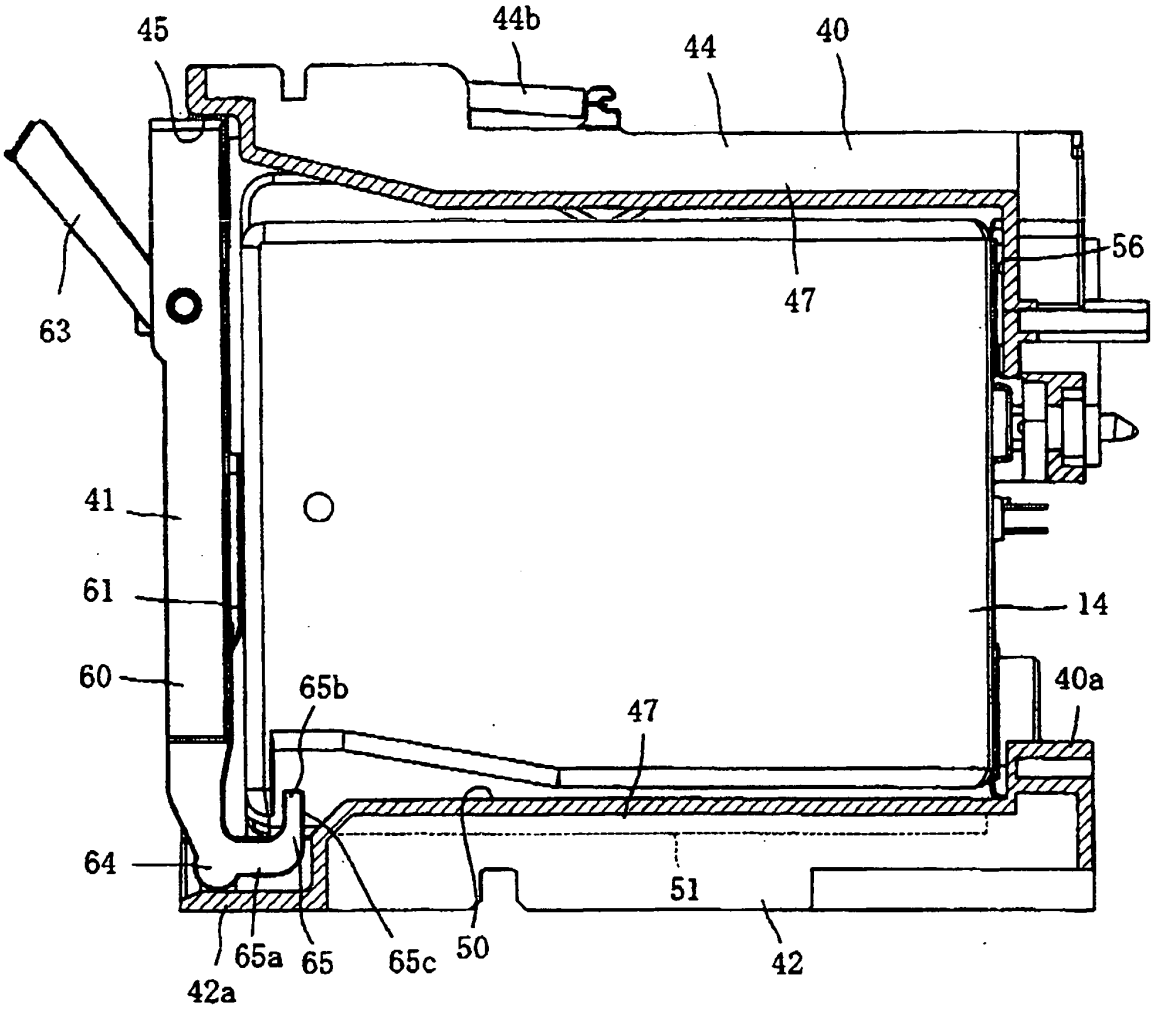
45
44b
44
40
56
47
63
41
61
14
60
65b
40a
47
64
51
65a
65
65c
50
42
42a

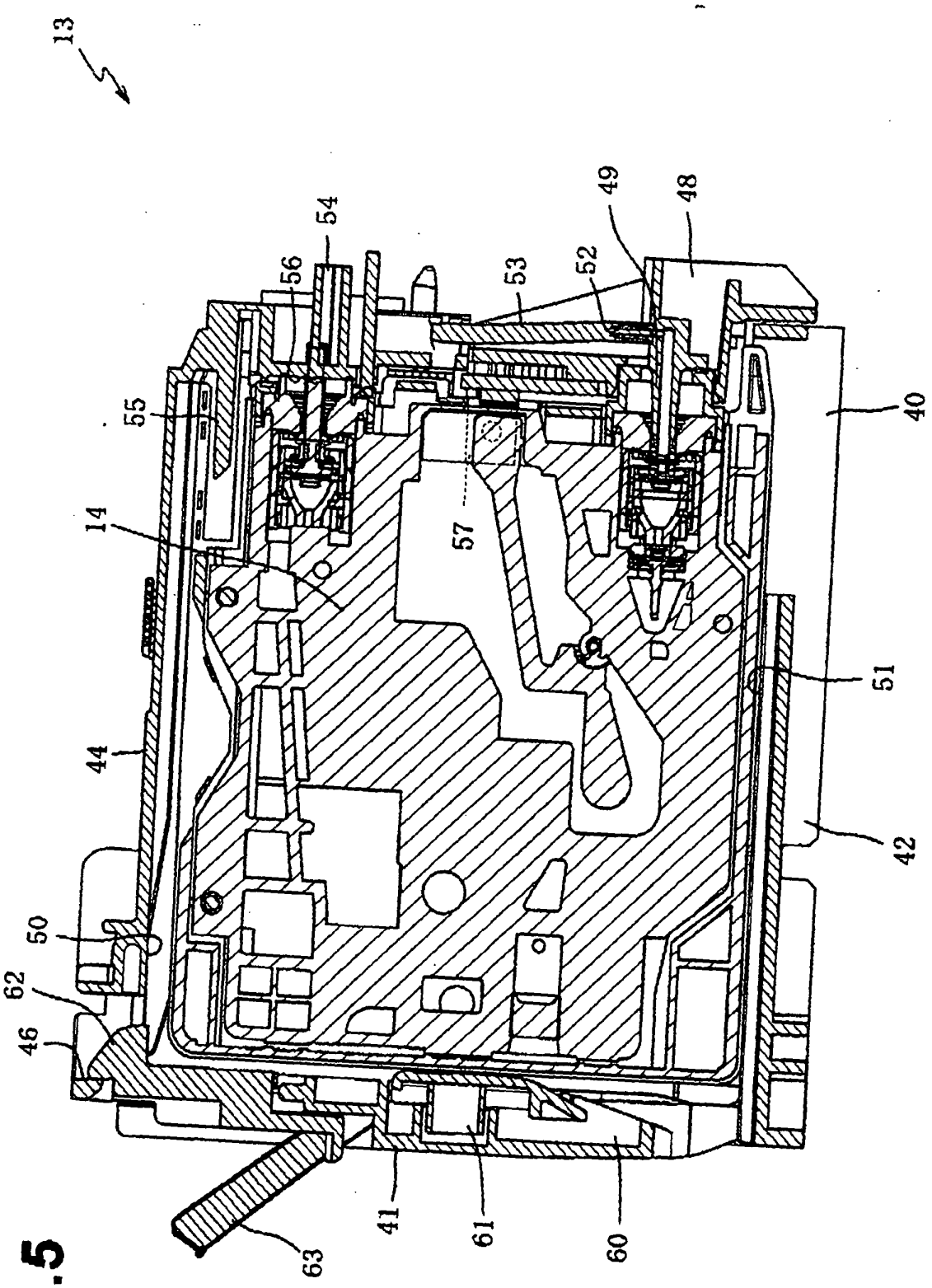

Fig.5

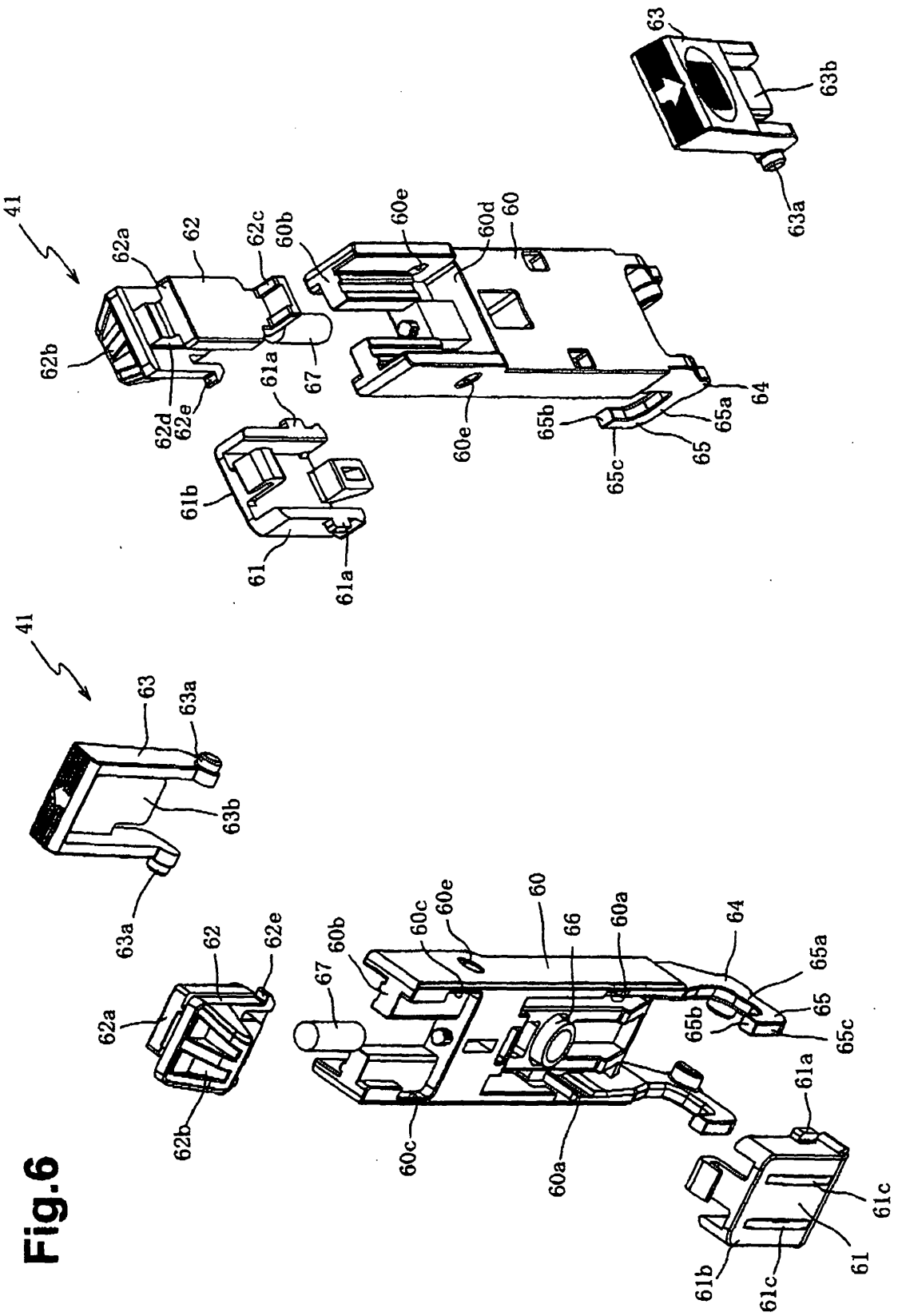
41
62a
62
62c
60b
60e
60d
60
63
63b
63a
62b
62d
62e
61a
67
61b
61
61a
60e
65b
65a
64
65
65c
41
63
63a
63b
63a
62
62e
62a
62b
67
60b
60c
60e
60
66
60a
64
65a
65
65b
65c
60c
60a
61a
61c
61
61b
61c

Fig.6

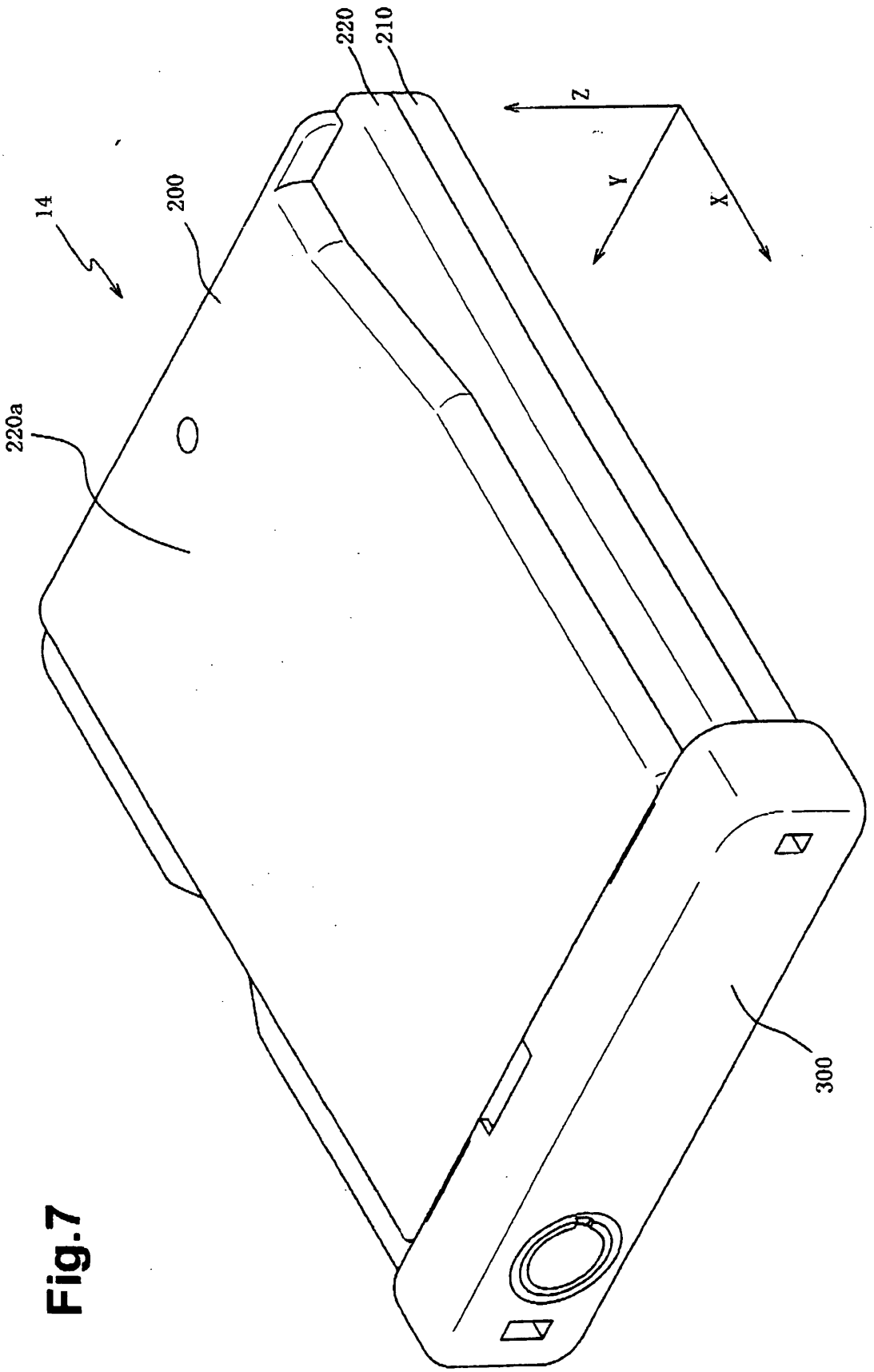

Fig.7

Fig.8

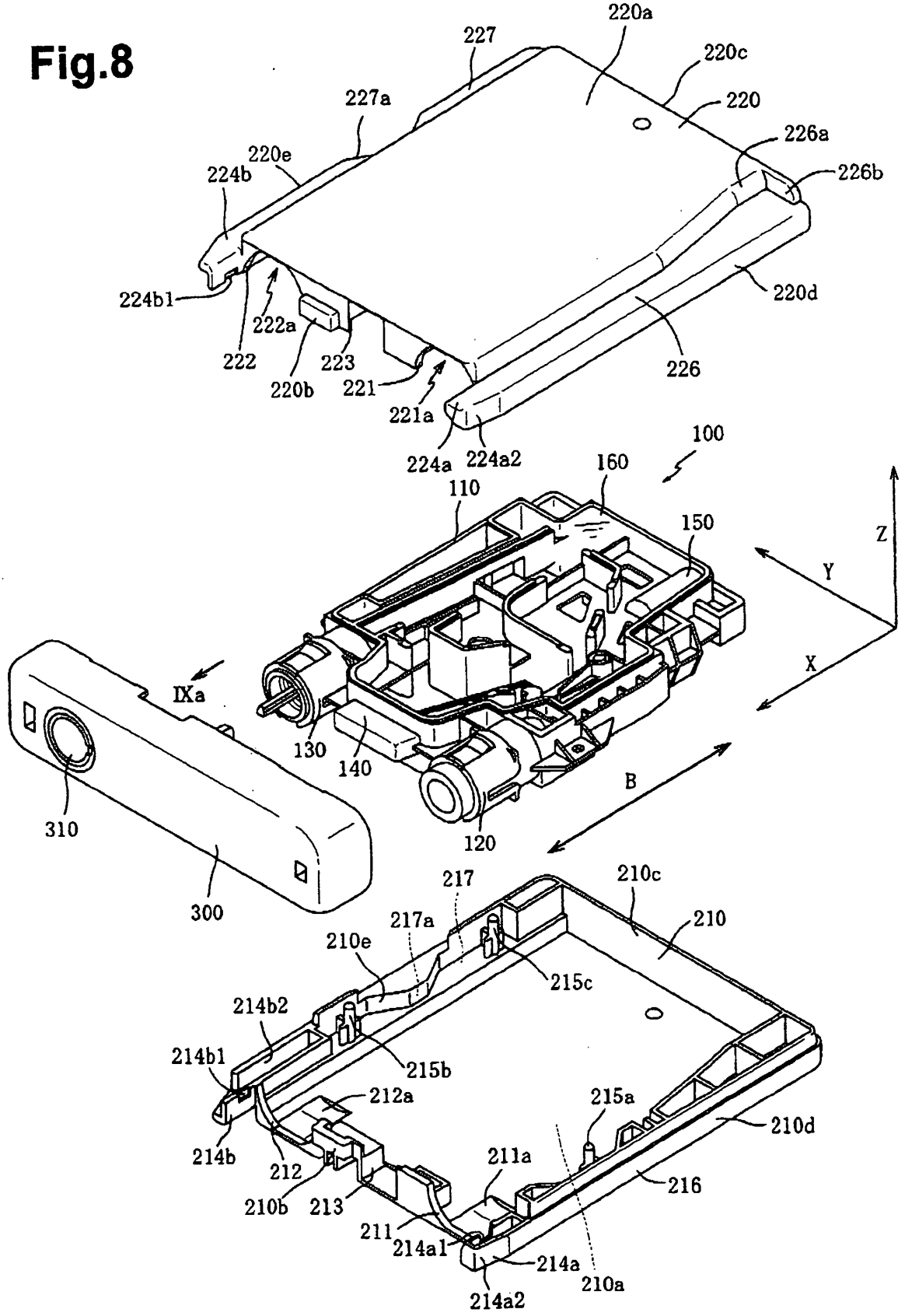
220a
227
220c
227a
220
226a
220e
224b
226b
224b1
220d
222a
222
223
226
220b
221
221a
224a
224a2
100
160
110
150
Z
Y
X
IXa
130
140
B
310
120
300
217
210c
217a
210
210e
215c
214b2
214b1
215b
212a
215a
210d
214b
212
211a
216
210b
213
211
214a1
214a
210a
214a2

Fig.9

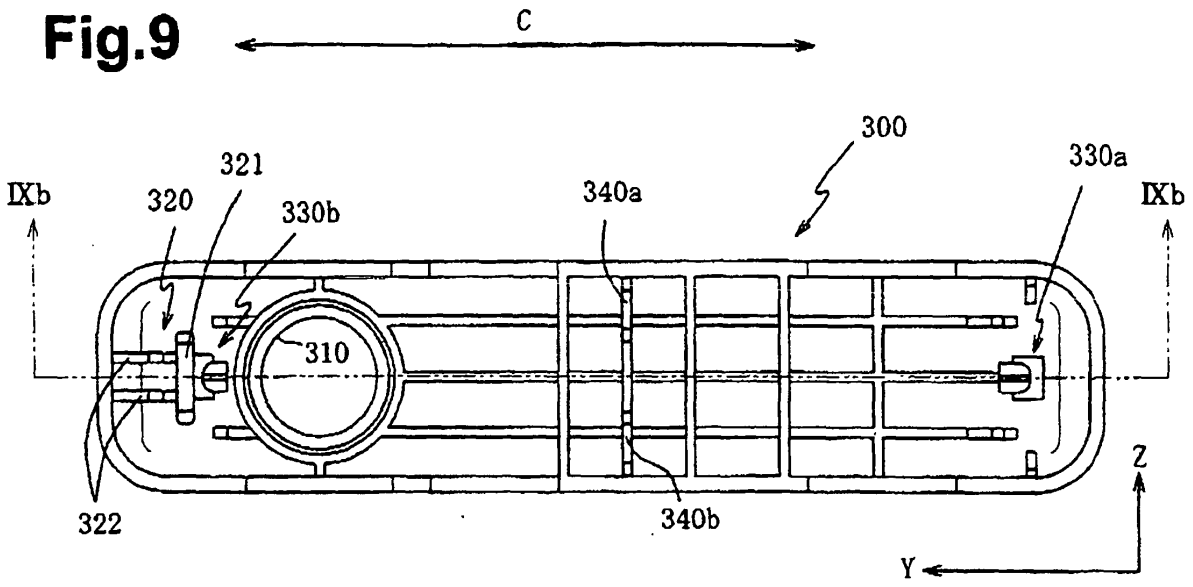
C
300
321
330a
IXb
320
330b
340a
IXb
310
Z
322
340b
Y

(a)

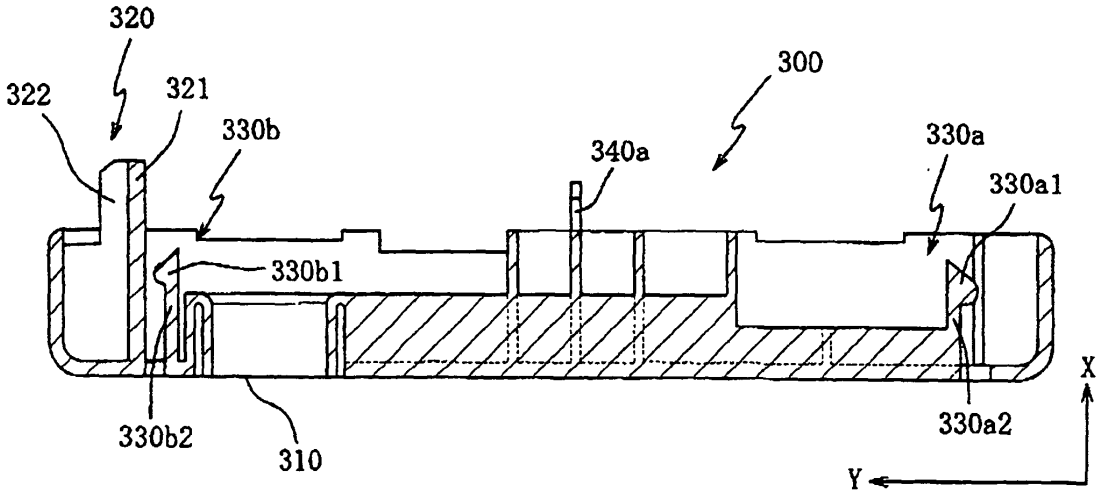
320
300
322
321
330b
340a
330a
330a1
330b1
X
330b2
310
330a2
Y

(b)

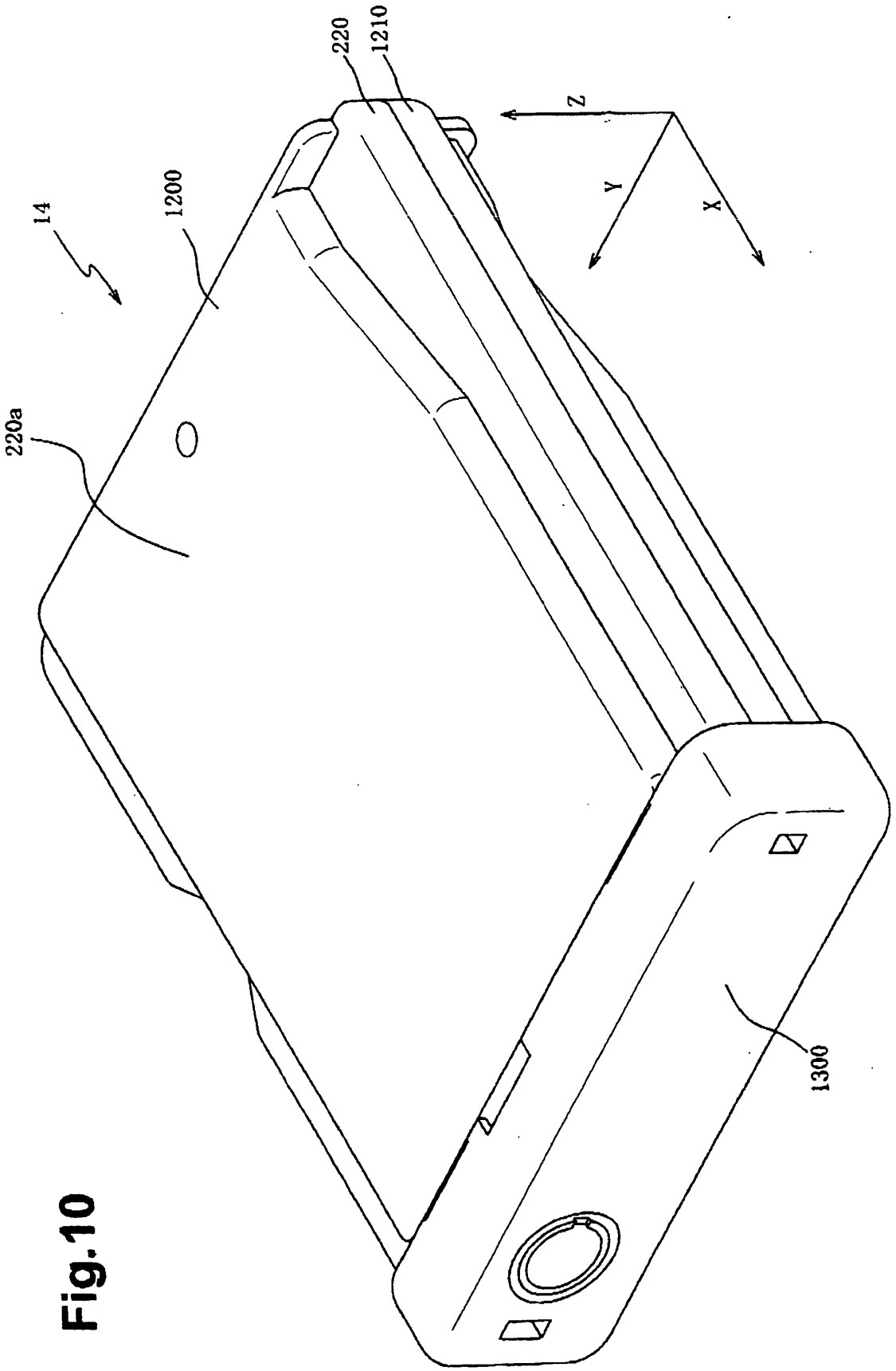

Fig.10

Fig.11

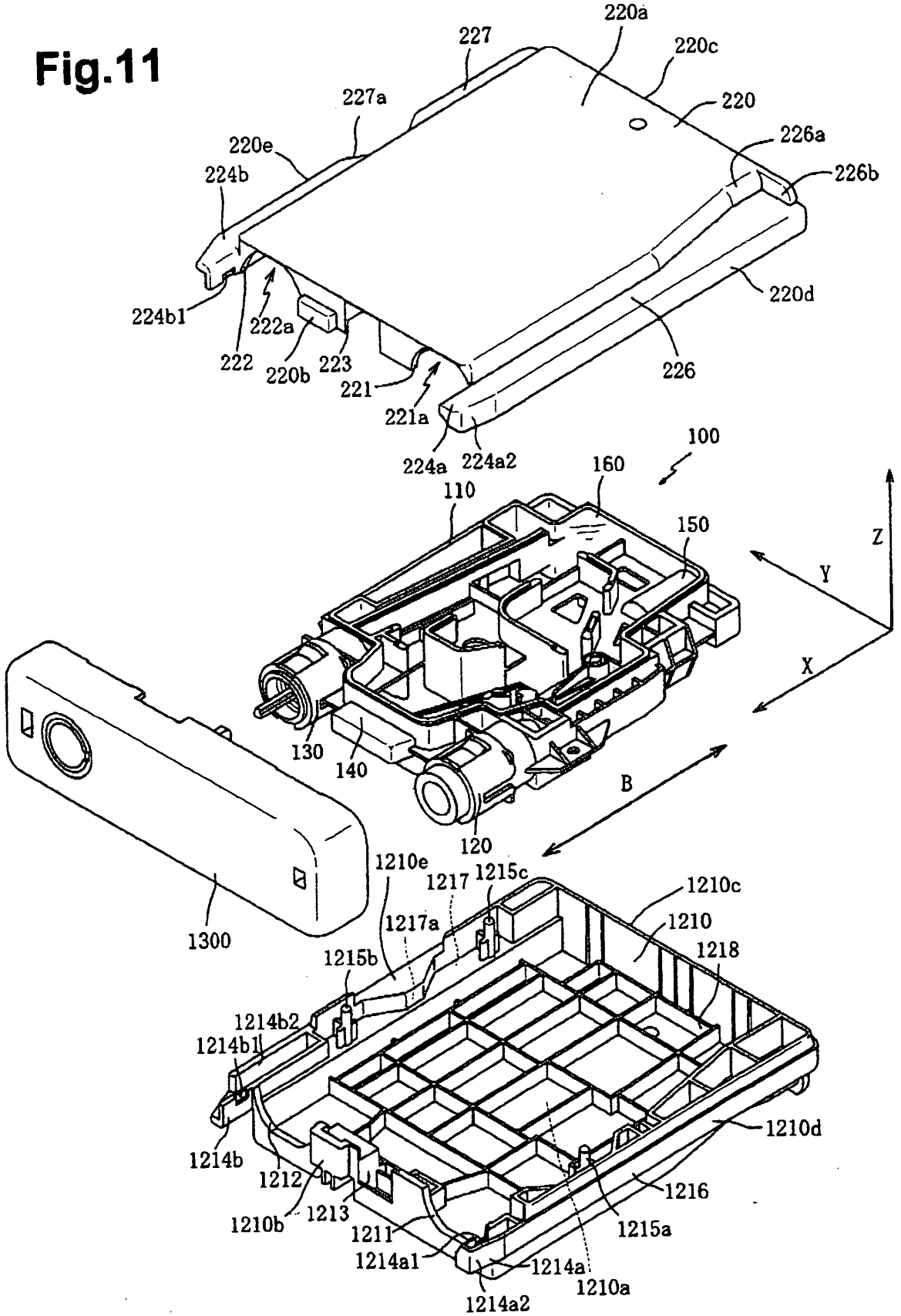
220a
227
220c
227a
220
226a
220e
224b
226b
224b1
222a
220d
222
220b
223
226
221
221a
224a
224a2
100
160
110
150
Z
Y
X
130
140
B
120
1210e
1217
1215c
1210c
1300
1217a
1210
1218
1215b
1214b2
1214b1
1210d
1214b
1212
1216
1210b
1213
1211
1215a
1214a1
1214a
1210a
1214a2

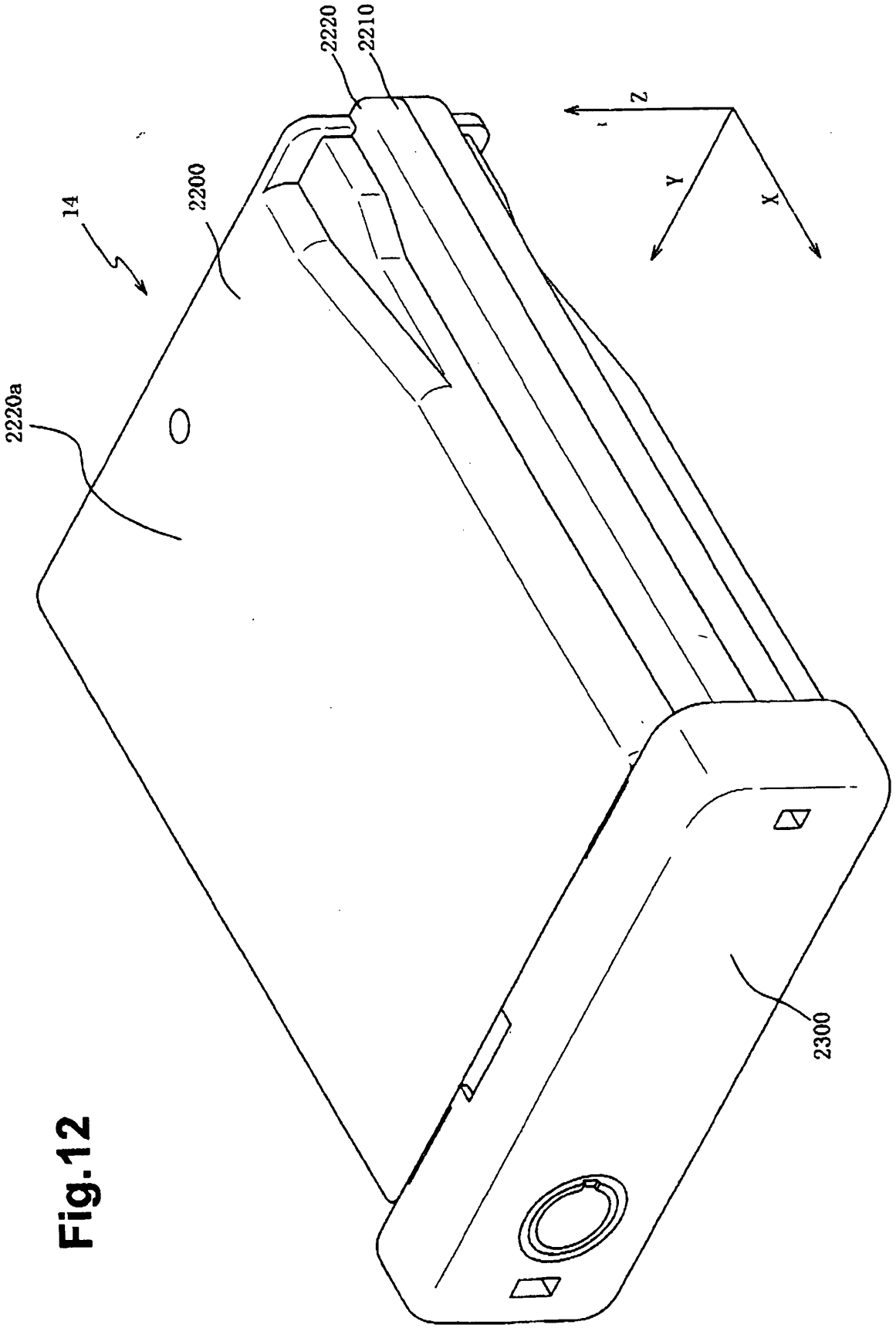

Fig.12

Fig.13

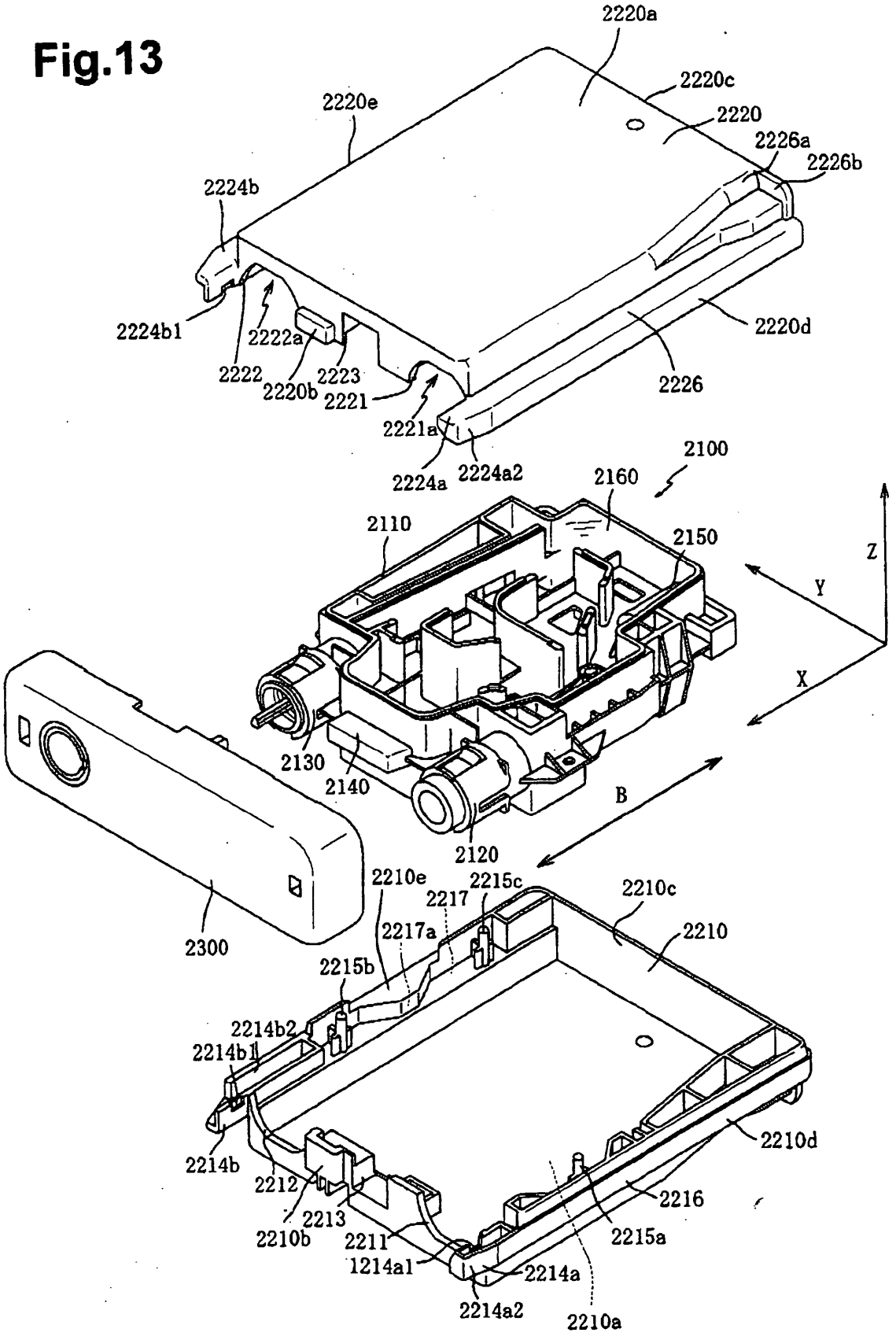
2220a
2220c
2220e
2220
2226a
2226b
2224b
2224b1
2222a
2222
2220b
2223
2221
2221a
2224a
2224a2
2220d
2226
2100
2160
2110
2150
Z
Y
X
2130
2140
B
2120
2300
2210e
2215c
2217
2210c
2217a
2210
2215b
2214b2
2214b1
2214b
2212
2213
2210b
2211
1214a1
2214a2
2210d
2216
2215a
2214a
2210a

Fig.14

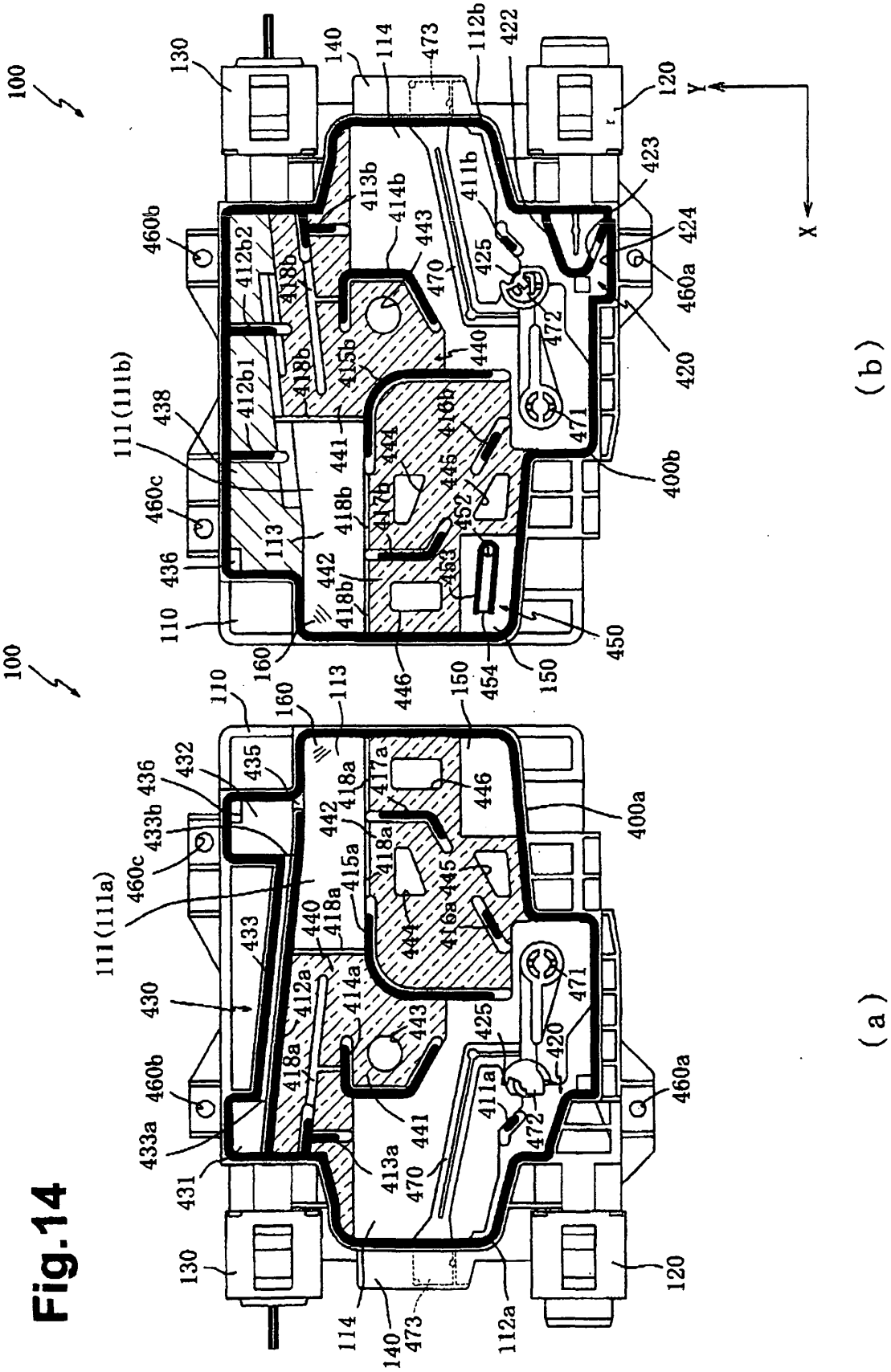
100
130
140
114
473
112b
422
120
Y
X
423
424
460a
420
400b
471
472
425
411b
413b
414b
443
470
440
415b
416b
444
445
452
453
441
418b
417b
442
113
438
111(111b)
460c
436
110
160
446
454
150
450
(b)
100
110
160
113
150
432
435
436
433b
460c
111(111a)
433
430
460b
433a
431
412a
414a
418a
417a
442
415a
416a
445
444
440
443
441
413a
470
411a
425
420
471
472
460a
400a
130
114
140
473
112a
120
(a)

Fig.15

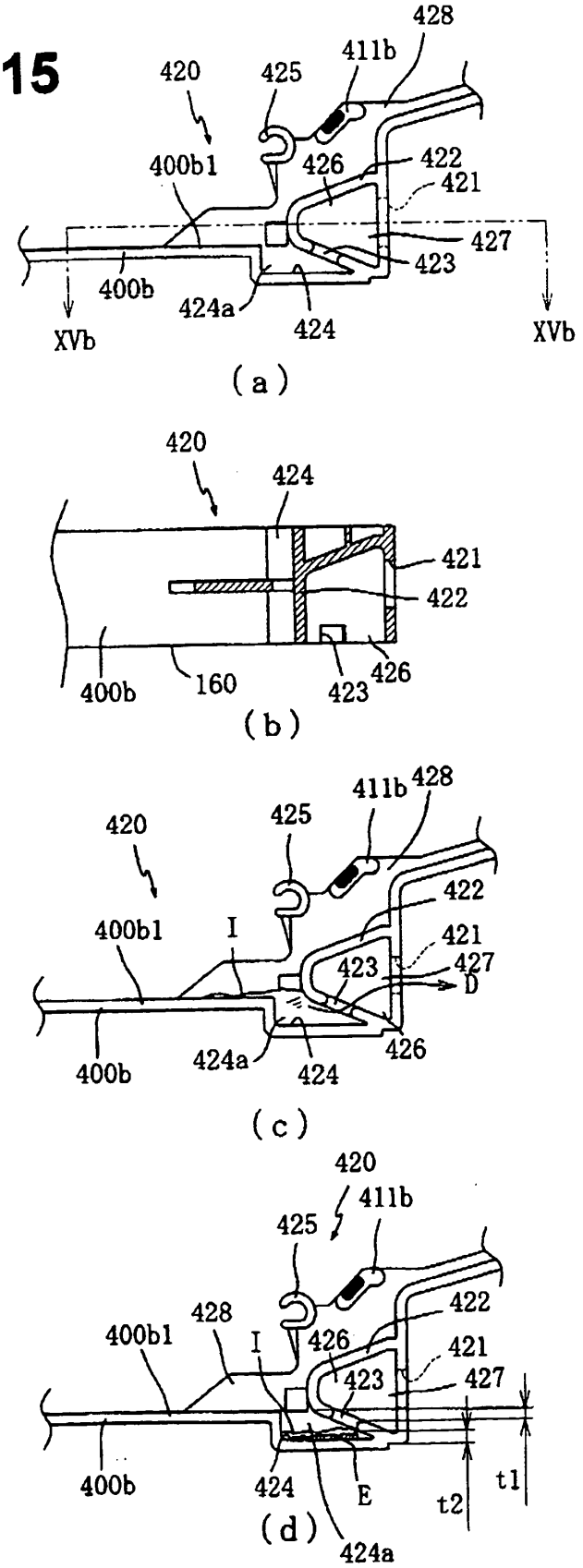
428
411b
420
425
400b1
426
422
421
427
423
400b
424a
424
XVb
XVb
(a)
420
424
421
422
400b
160
423
426
(b)
411b
428
420
425
422
400b1
I
421
423
427
D
400b
424a
424
426
(c)
420
411b
425
422
428
400b1
I
426
421
423
427
400b
424
E
t2
t1
(d)
424a

Fig.16

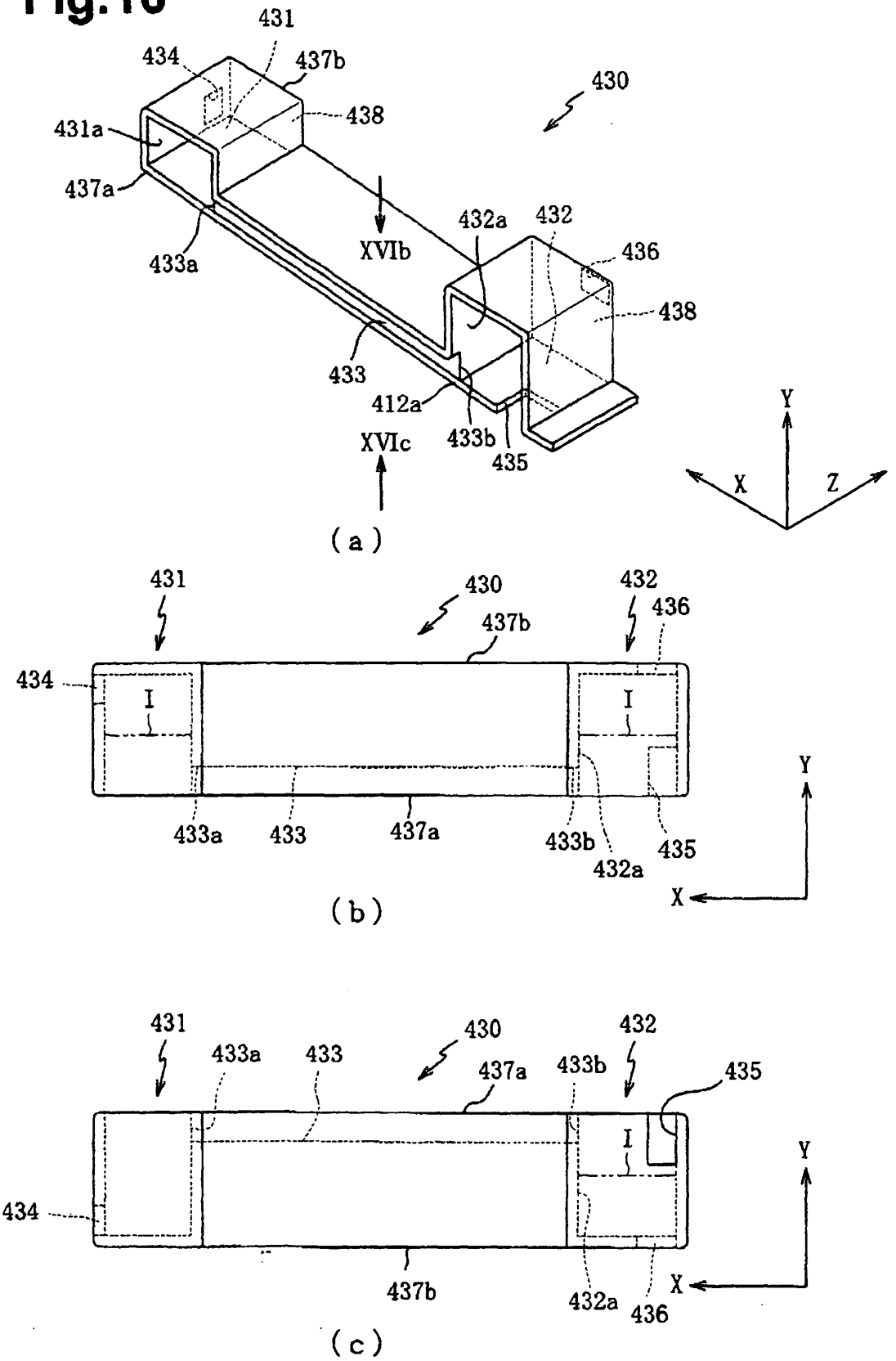
431
434
437b
430
438
431a
437a
432a
432
XVIb
436
433a
438
433
412a
433b
XVIc
435
Y
X
Z
(a)
431
430
432
437b
436
434
I
I
Y
433a
433
437a
433b
435
432a
X
(b)
431
433a
433
430
432
437a
433b
435
I
Y
434
437b
432a
X
436
(c)

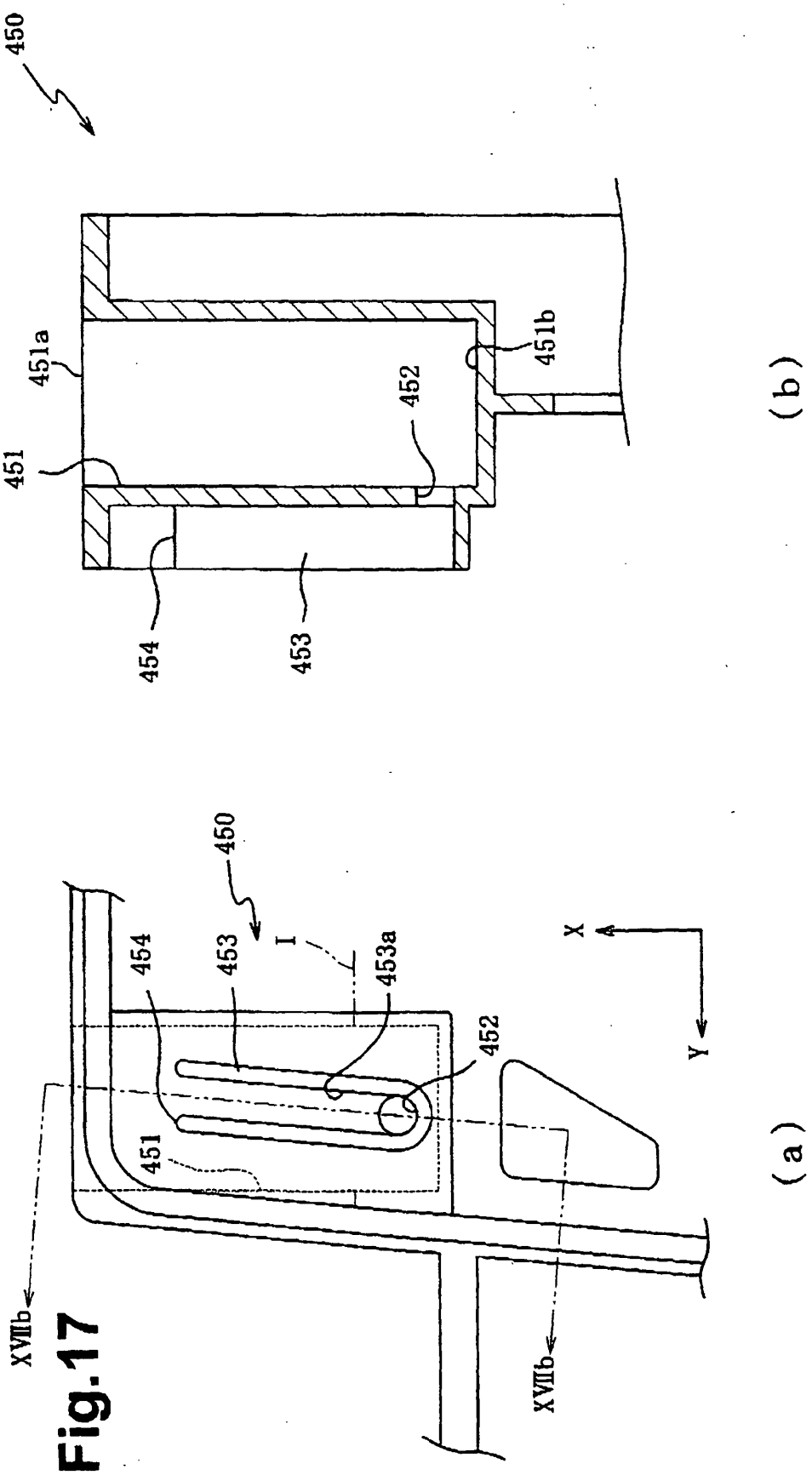
450
451a
451
452
451b
454
453
(b)
450
454
453
I
453a
452
451
X
Y
XVIIb
XVIIb
(a)

Fig.17

Fig.18

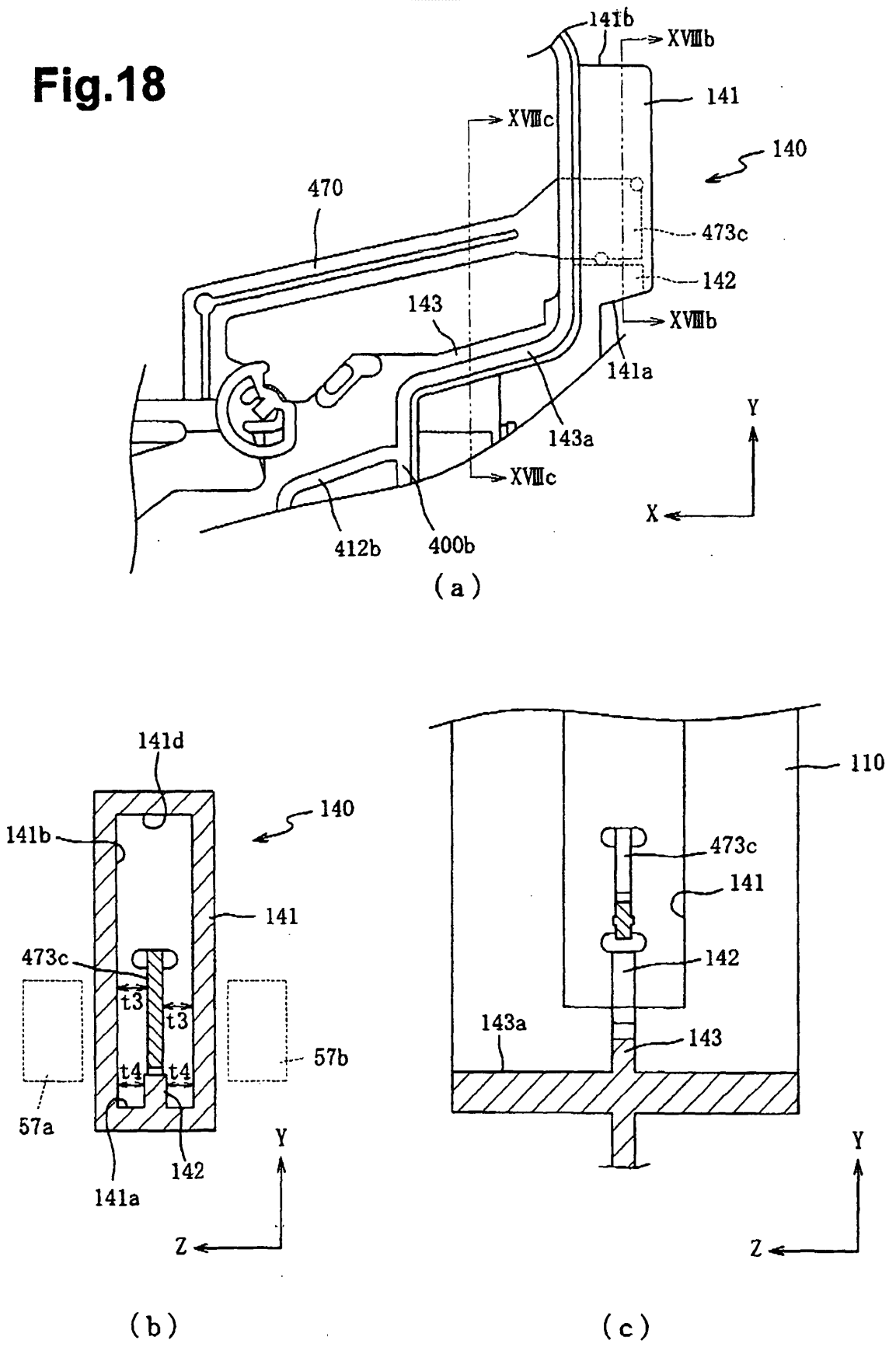
141b
XVIIIb
141
XVIIIc
140
470
473c
142
143
XVIIIb
141a
143a
Y
XVIIIc
X
412b
400b
(a)
141d
140
141b
141
473c
t3
t3
t4
t4
57b
57a
142
141a
Y
Z
(b)
110
473c
141
142
143a
143
Y
Z
(c)

Fig.19

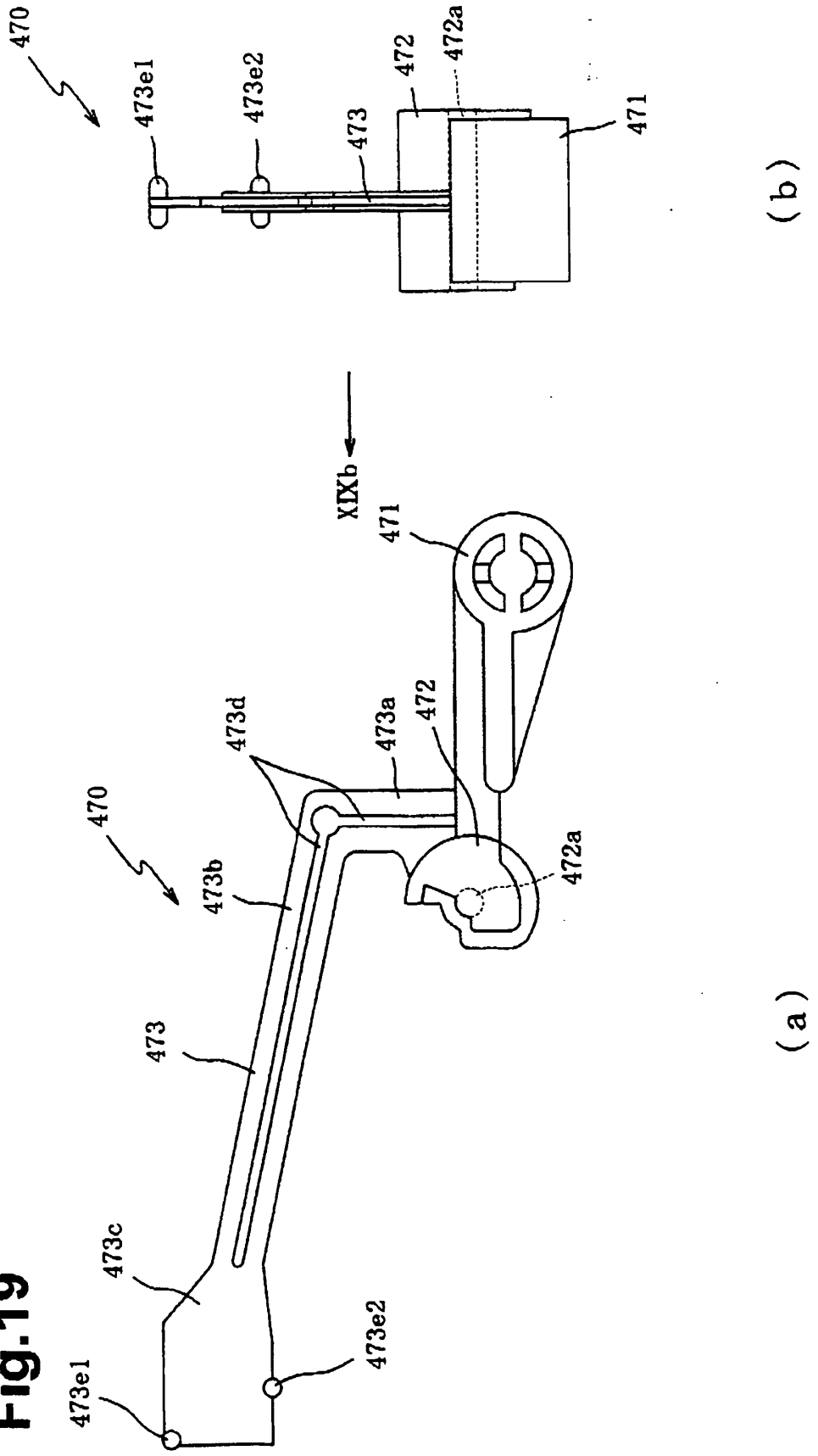
470
473e1
473e2
473
472
472a
471
(b)
XIXb
470
473d
473a
472
471
473b
472a
473
473c
473e1
473e2
(a)

Fig.20

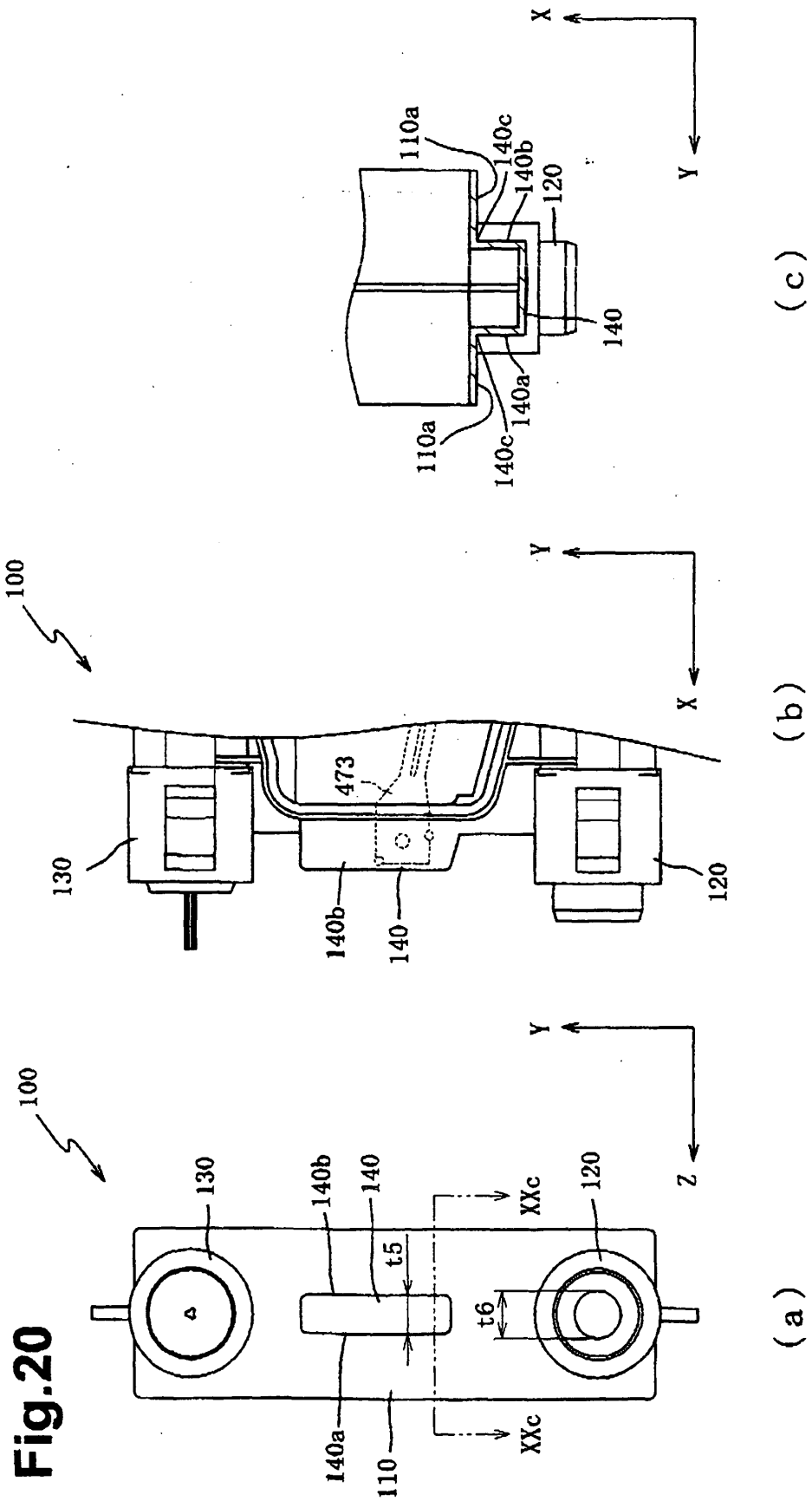
100
130
140b
140
t5
XXc
120
t6
140a
110
XXc
Y
Z
(a)
100
130
473
140b
140
120
X
Y
(b)
110a
140c
140b
120
140
140a
110a
140c
X
Y
(c)

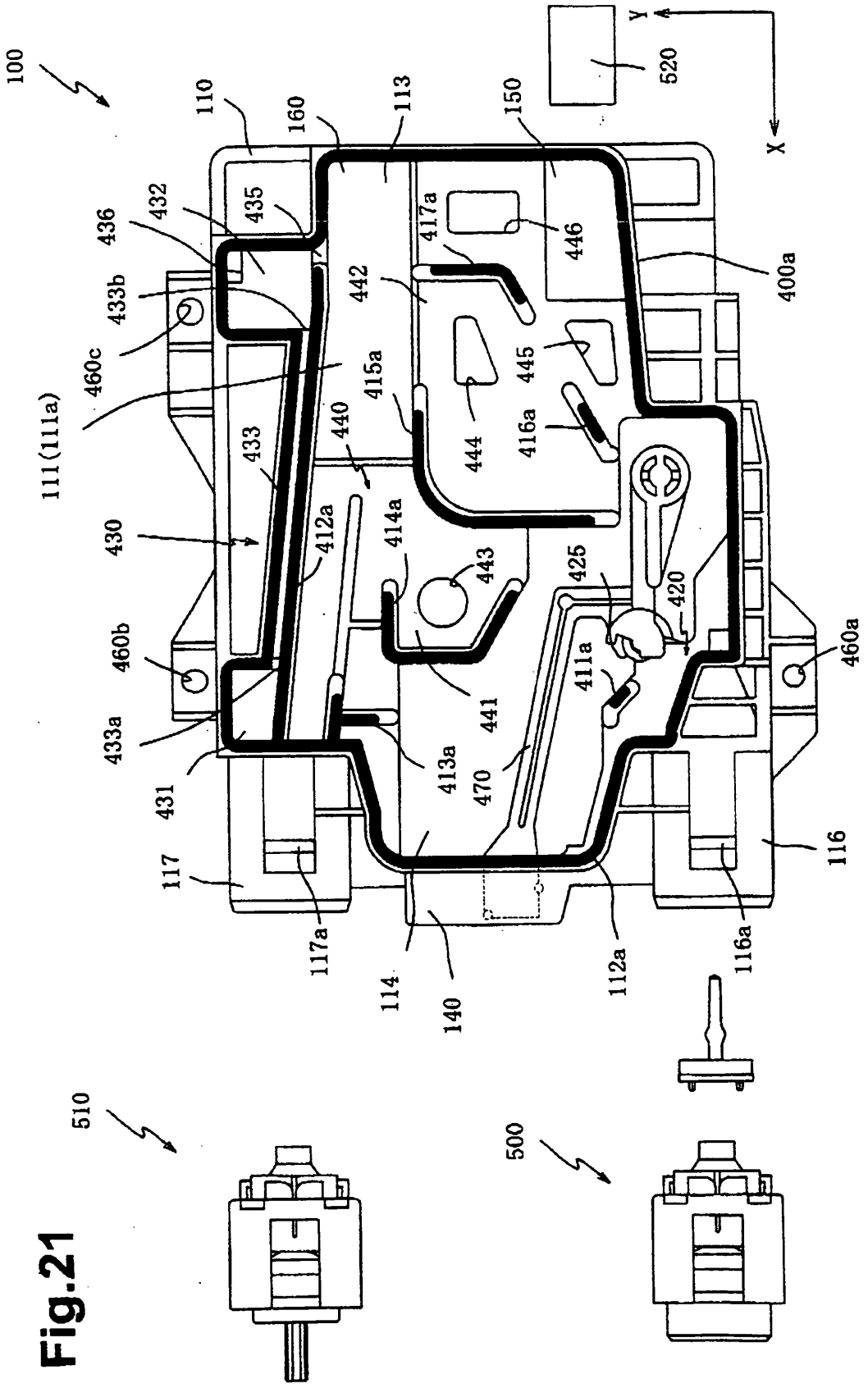
100
110
160
113
150
520
Y
X
432
436
435
417a
446
400a
433b
442
460c
445
415a
111(111a)
440
433
444
416a
430
412a
414a
443
425
420
460b
411a
460a
433a
441
431
413a
470
117
116
117a
114
140
112a
116a
510
500

Fig.21

Fig.22

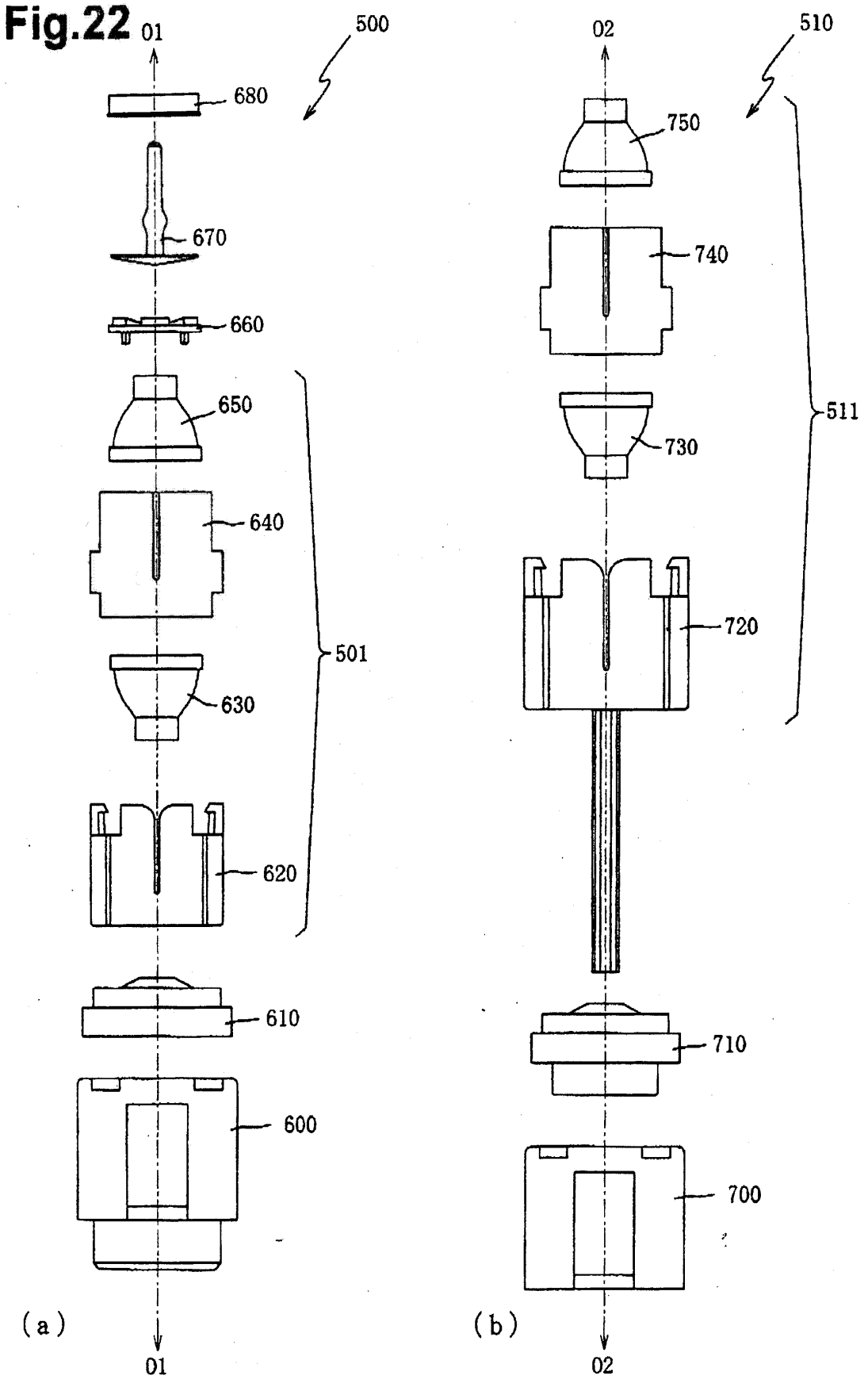
01
500
680
670
660
650
640
630
620
501
610
600
(a)
01
02
510
750
740
730
720
511
710
700
(b)
02

Fig.23

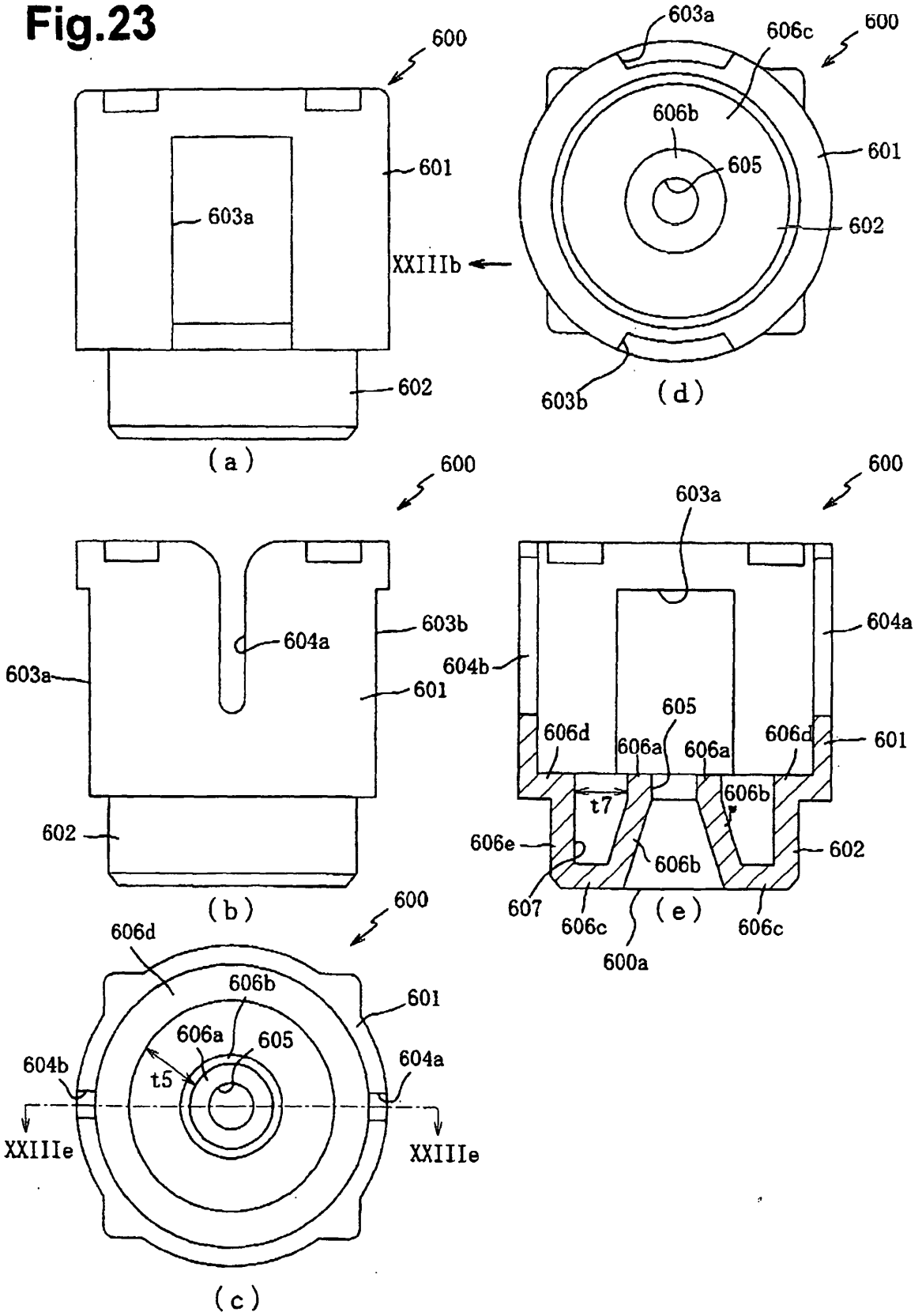
600
601
603a
XXIIIb
602
(a)
603a
606c
600
606b
605
601
602
603b
(d)
600
603b
604a
603a
601
602
(b)
600
603a
604a
604b
605
606d
606a
606a
606d
601
t7
606b
606e
606b
602
607
606c
(e)
606c
600a
600
606d
606b
601
606a
605
604b
t5
604a
XXIIIe
XXIIIe
(c)

Fig.24

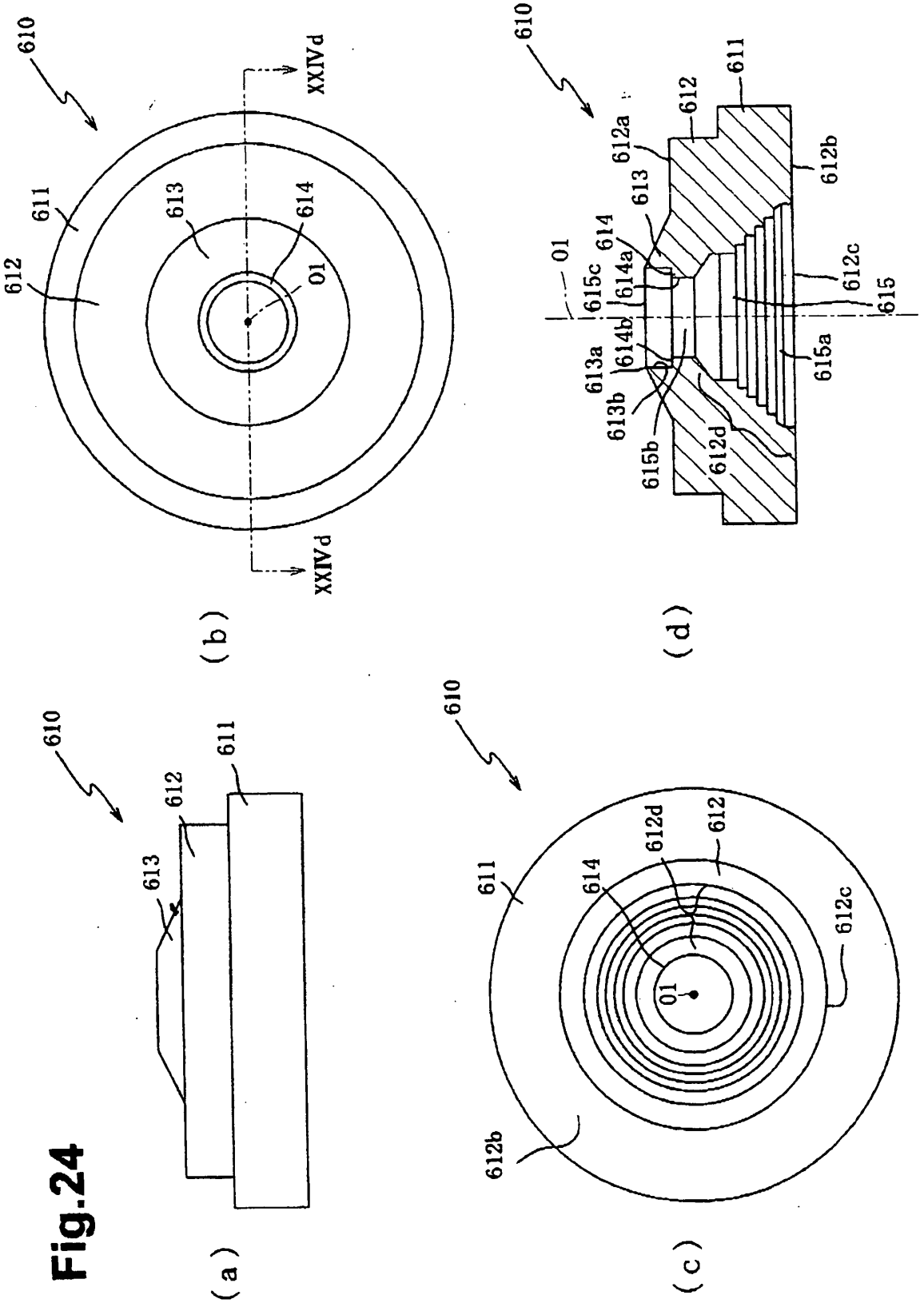
610
611
612
613
614
O1
XXIVd
XXIVd
612a
612b
612c
612d
613a
613b
614a
614b
615
615a
615b
615c
(a)
(b)
(c)
(d)

Fig.25

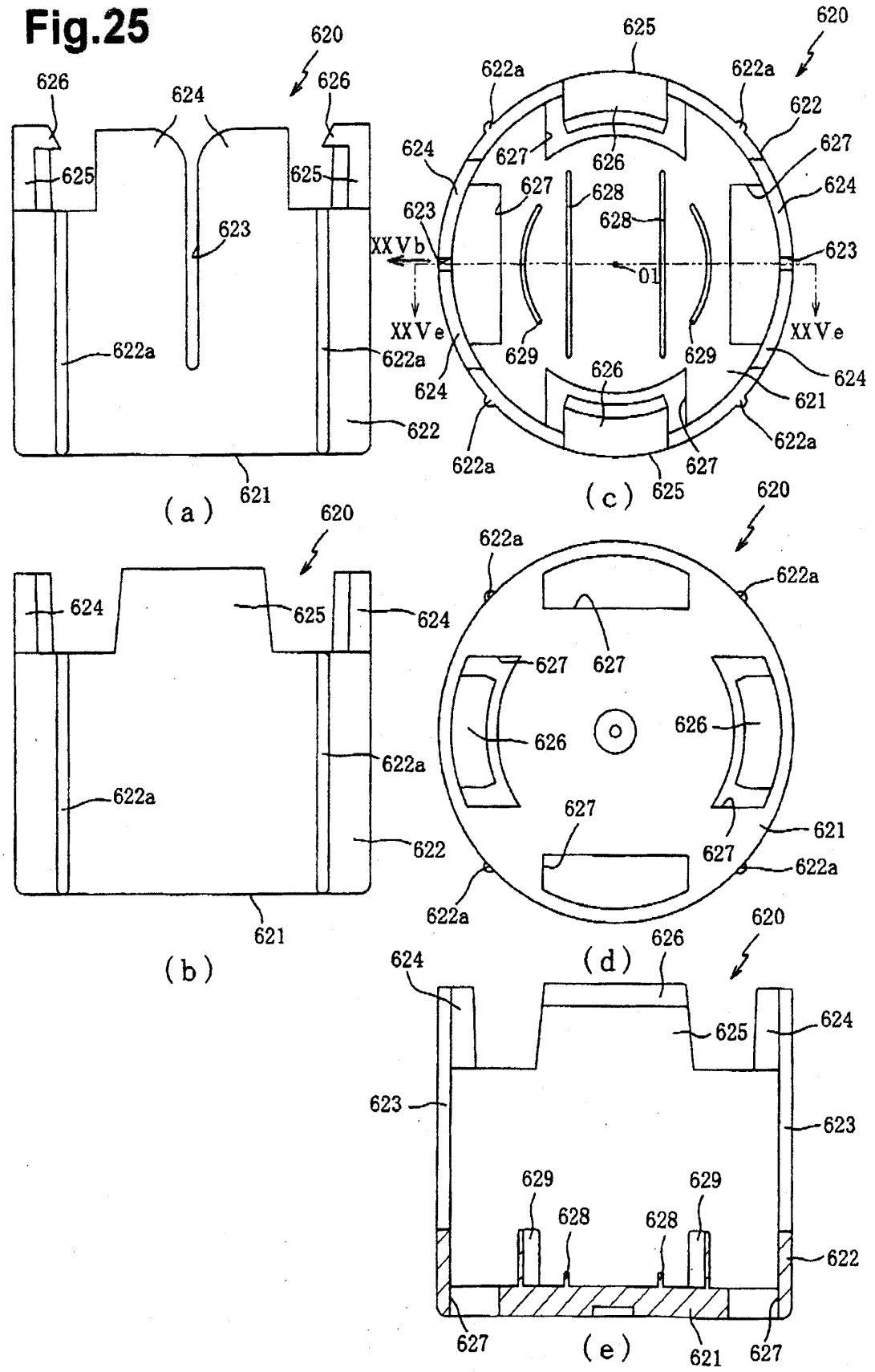

Fig.26

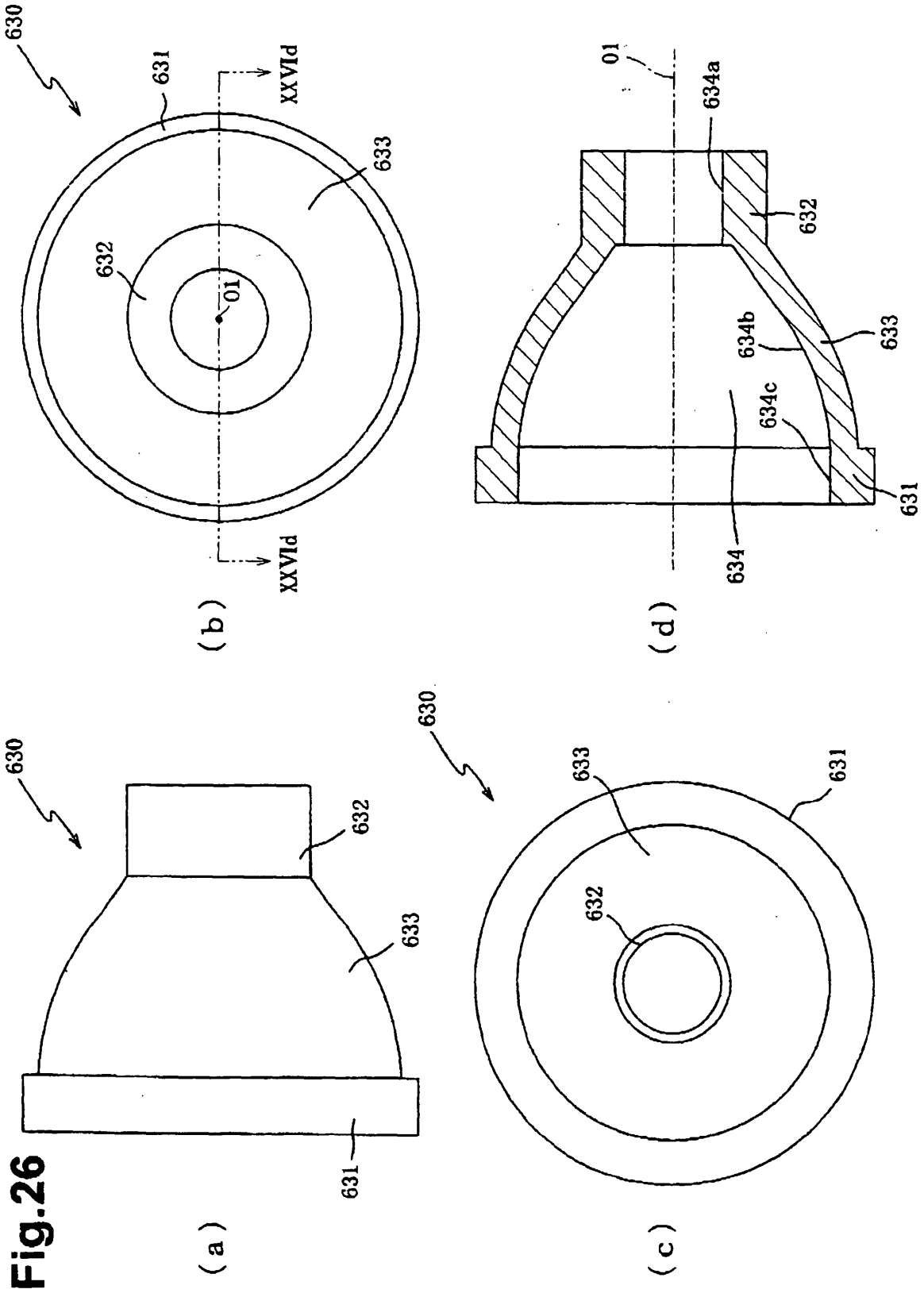

Fig.27

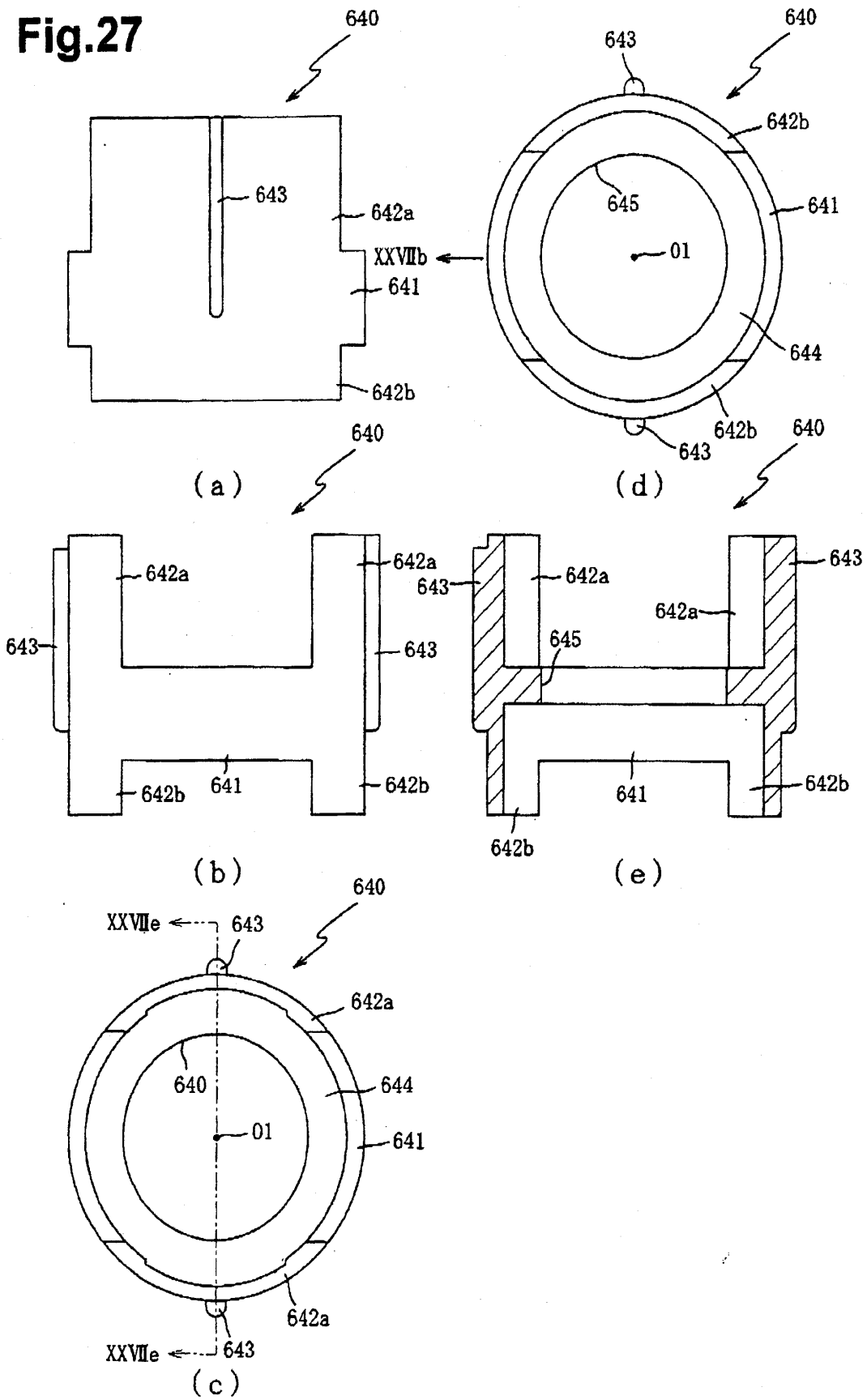
640
643
642a
XXVIIb
641
642b
(a)
640
643
642b
645
641
01
644
642b
643
(d)
640
642a
643
643
641
642b
(b)
640
643
642a
645
642a
643
641
642b
642b
(e)
XXVIIe
643
640
642a
640
644
01
641
642a
XXVIIe
643
(c)

Fig.28

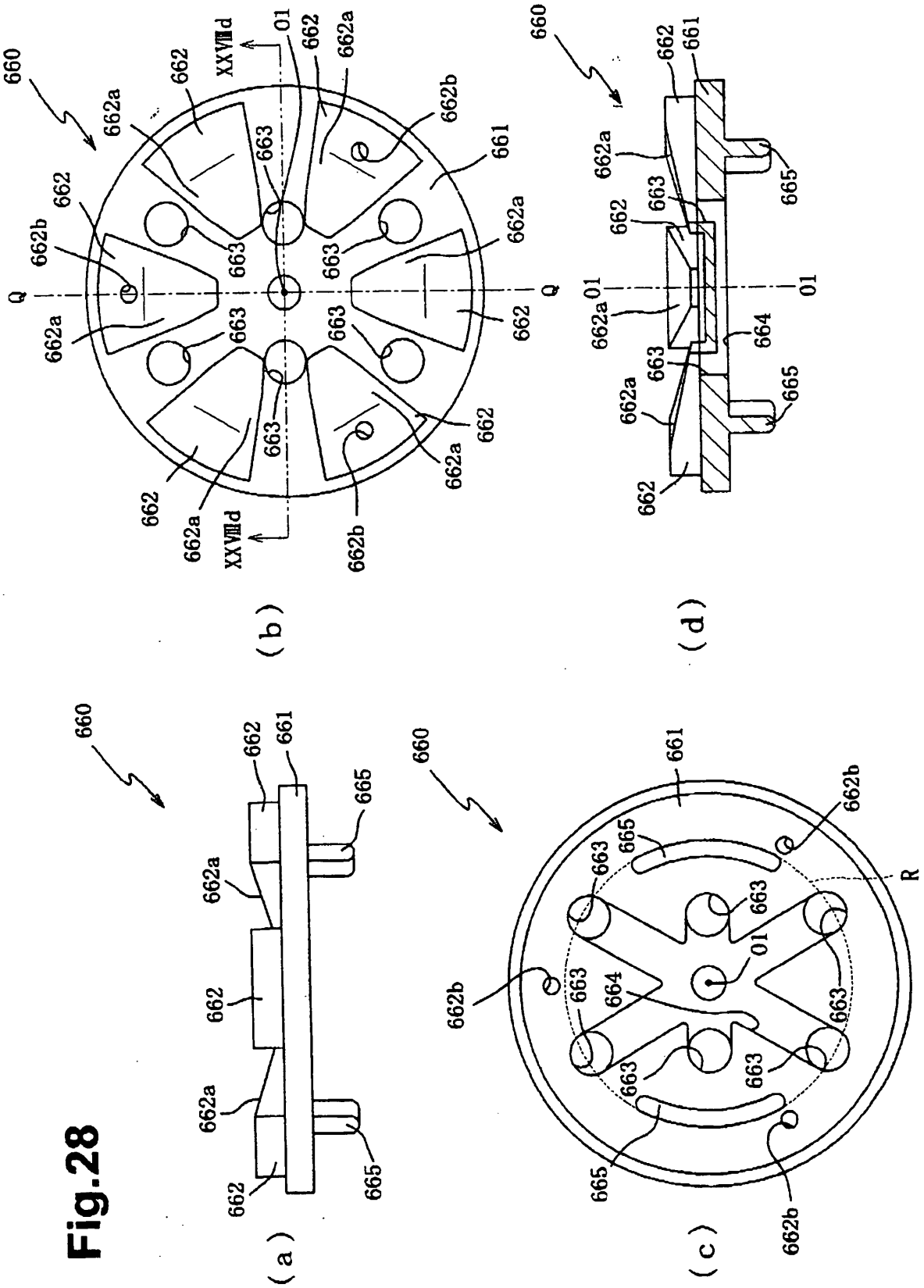

Fig.29

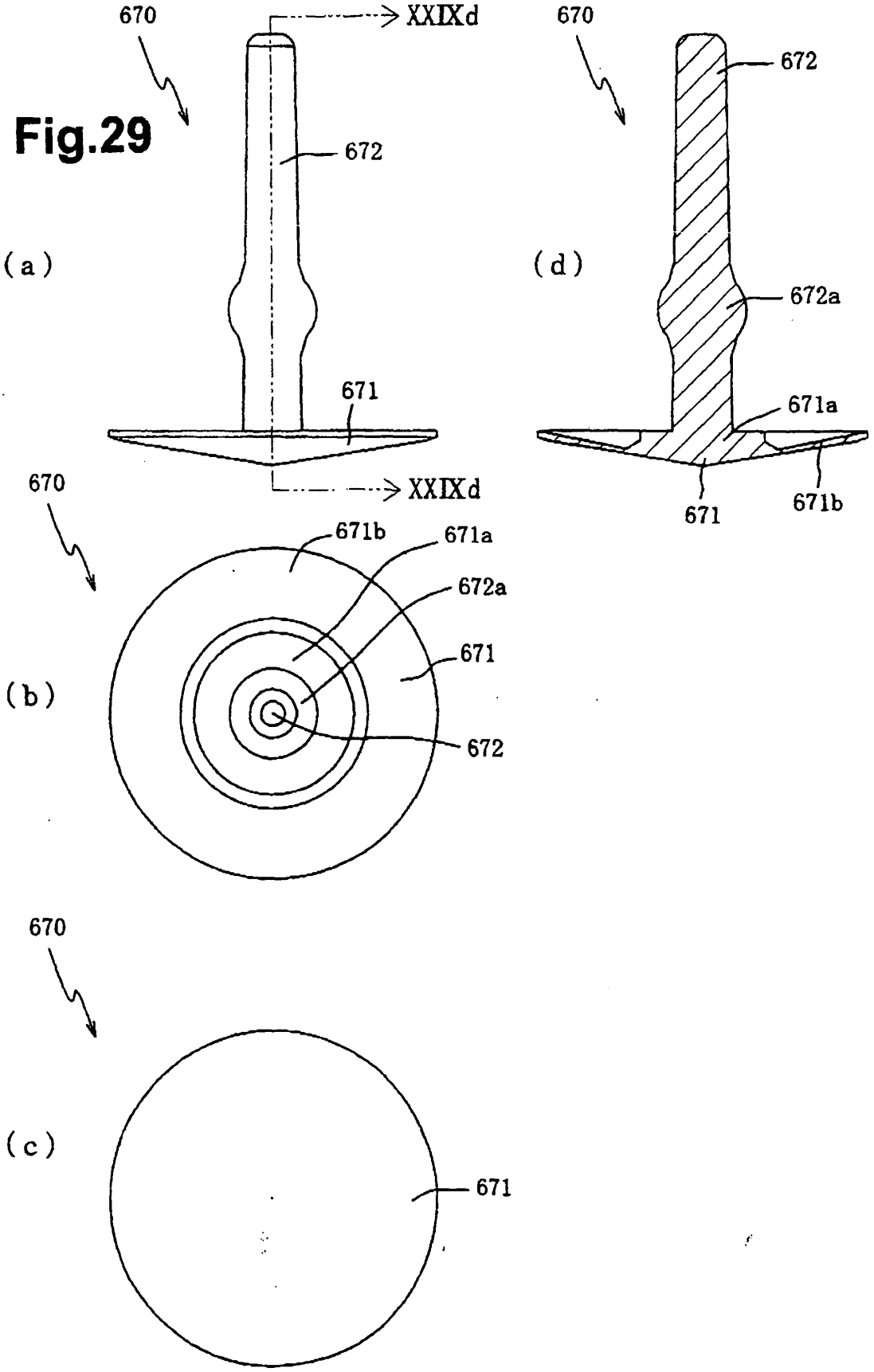
670
XXIXd
672
(a)
671
XXIXd
670
672
(d)
672a
671a
671
671b
670
671b
671a
672a
671
(b)
672
670
(c)
671

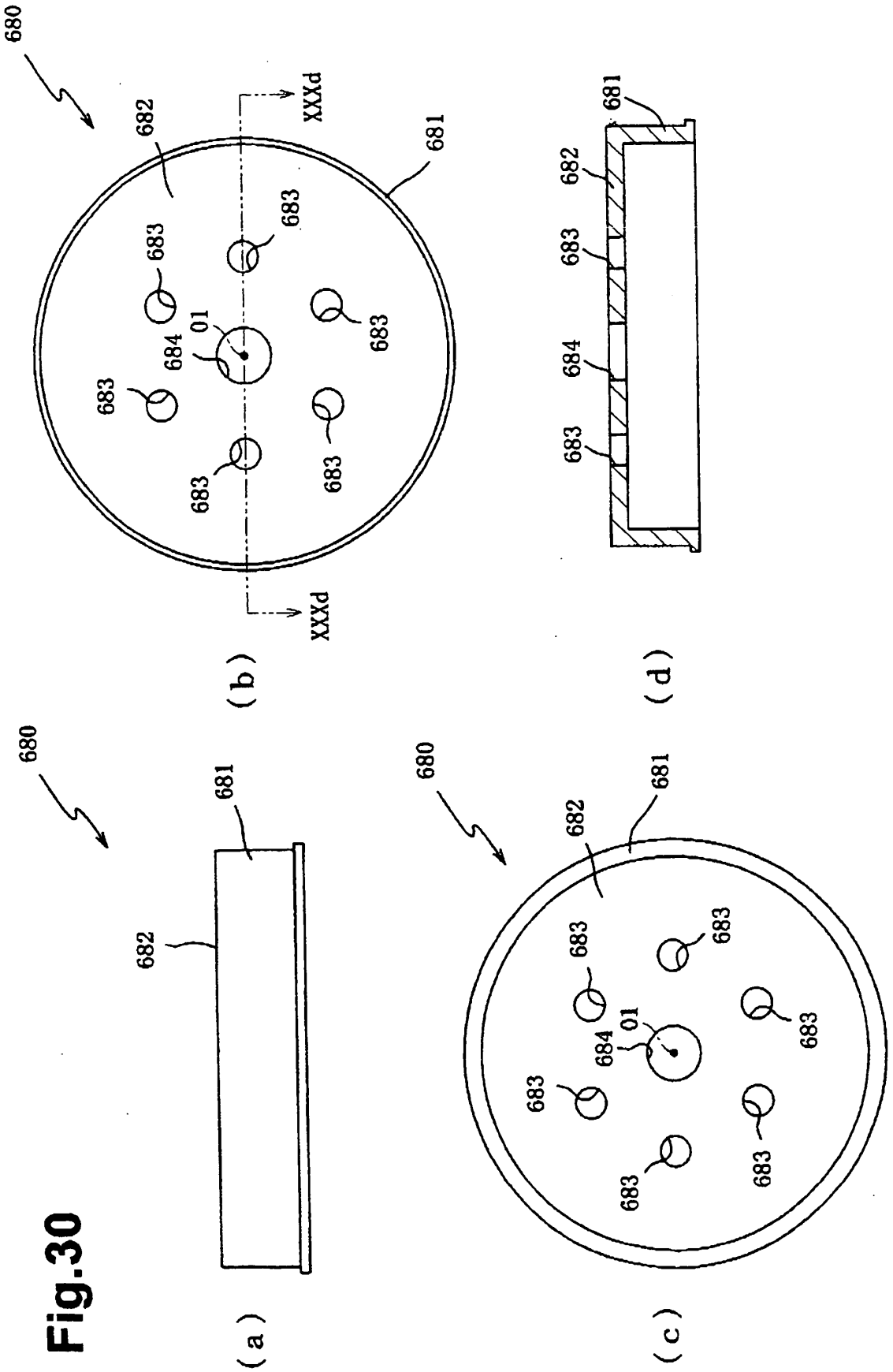

Fig.30

Fig.31

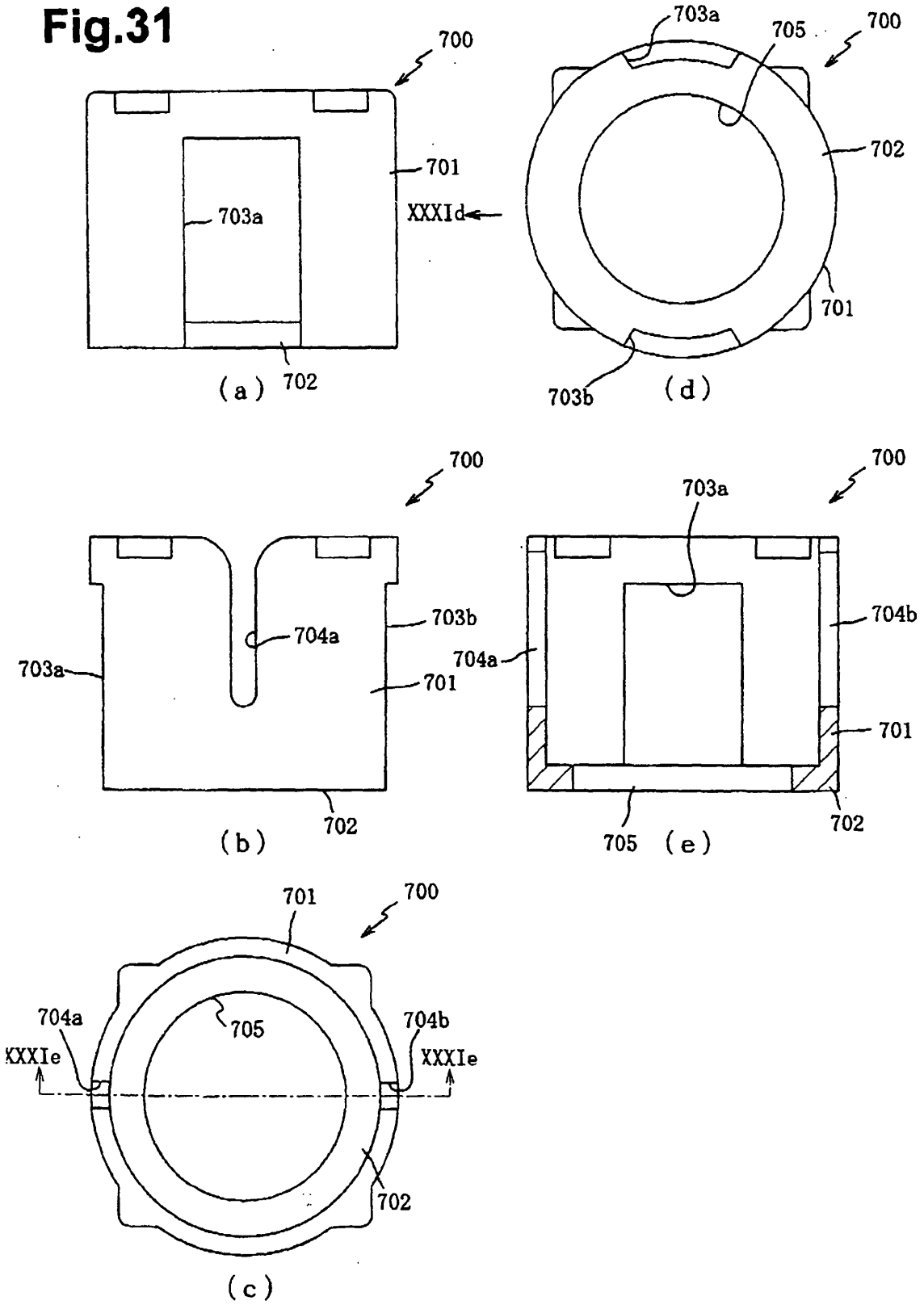
700
701
703a
XXXId
702
(a)
703a
705
700
702
701
703b
(d)
700
703b
704a
703a
701
702
(b)
700
703a
704b
704a
701
705
(e)
702
701
700
704a
705
704b
XXXIe
XXXIe
702
(c)

Fig.32

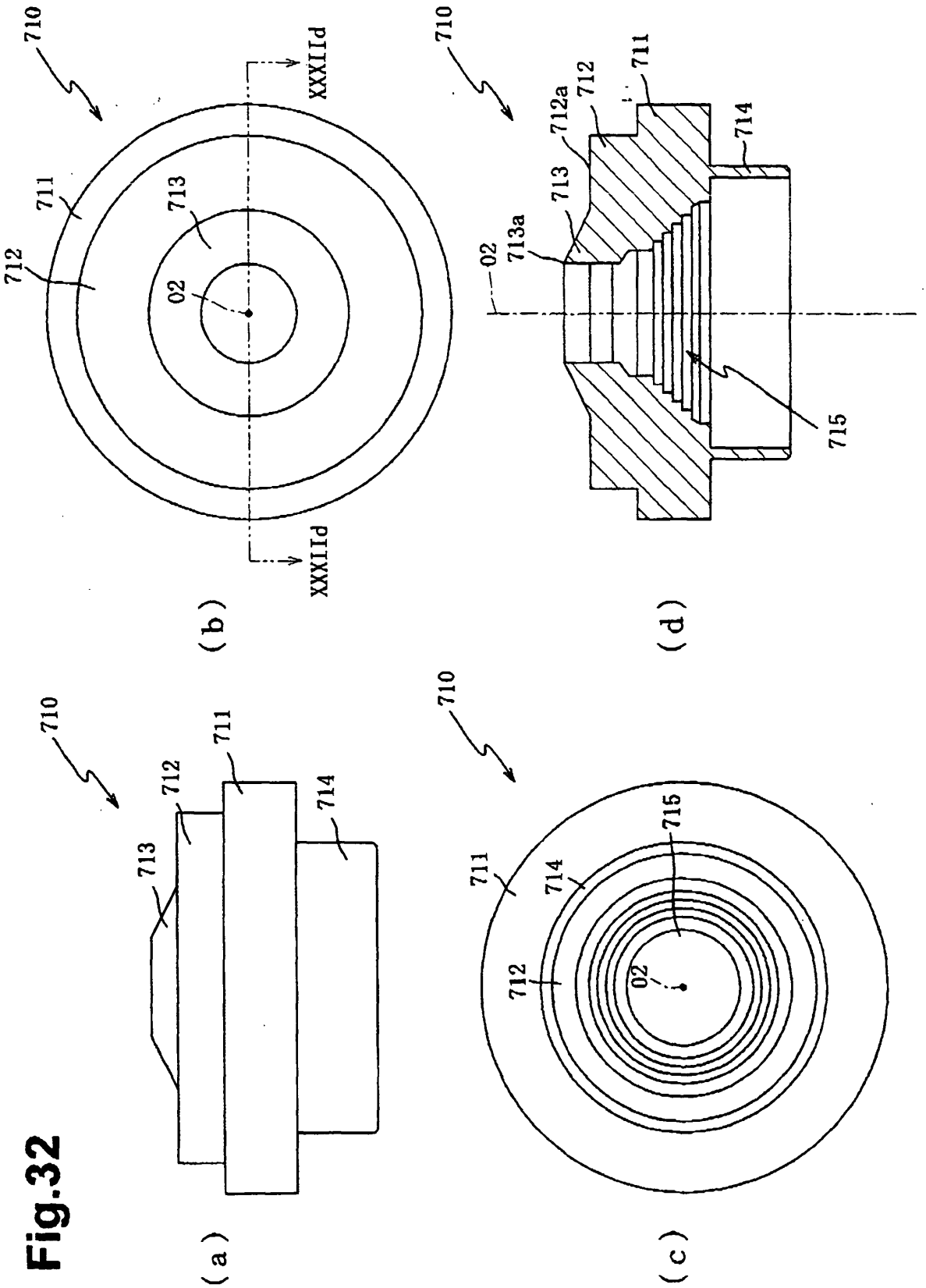

Fig.33

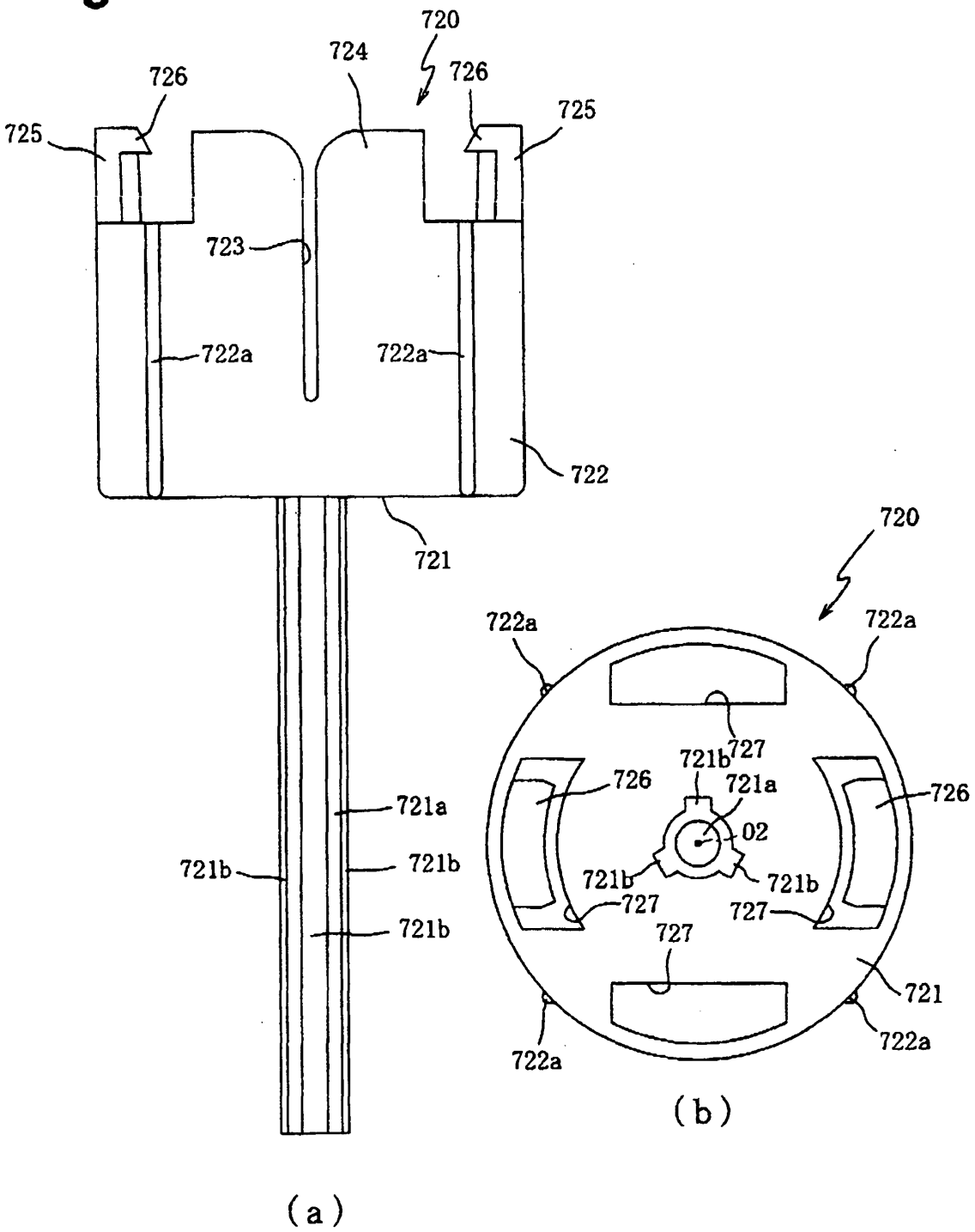
720
724
726
726
725
725
723
722a
722a
722
721
721a
721b
721b
721b
(a)
720
722a
722a
727
721b
726
721a
726
02
721b
721b
727
727
727
721
722a
722a
(b)

Fig.34

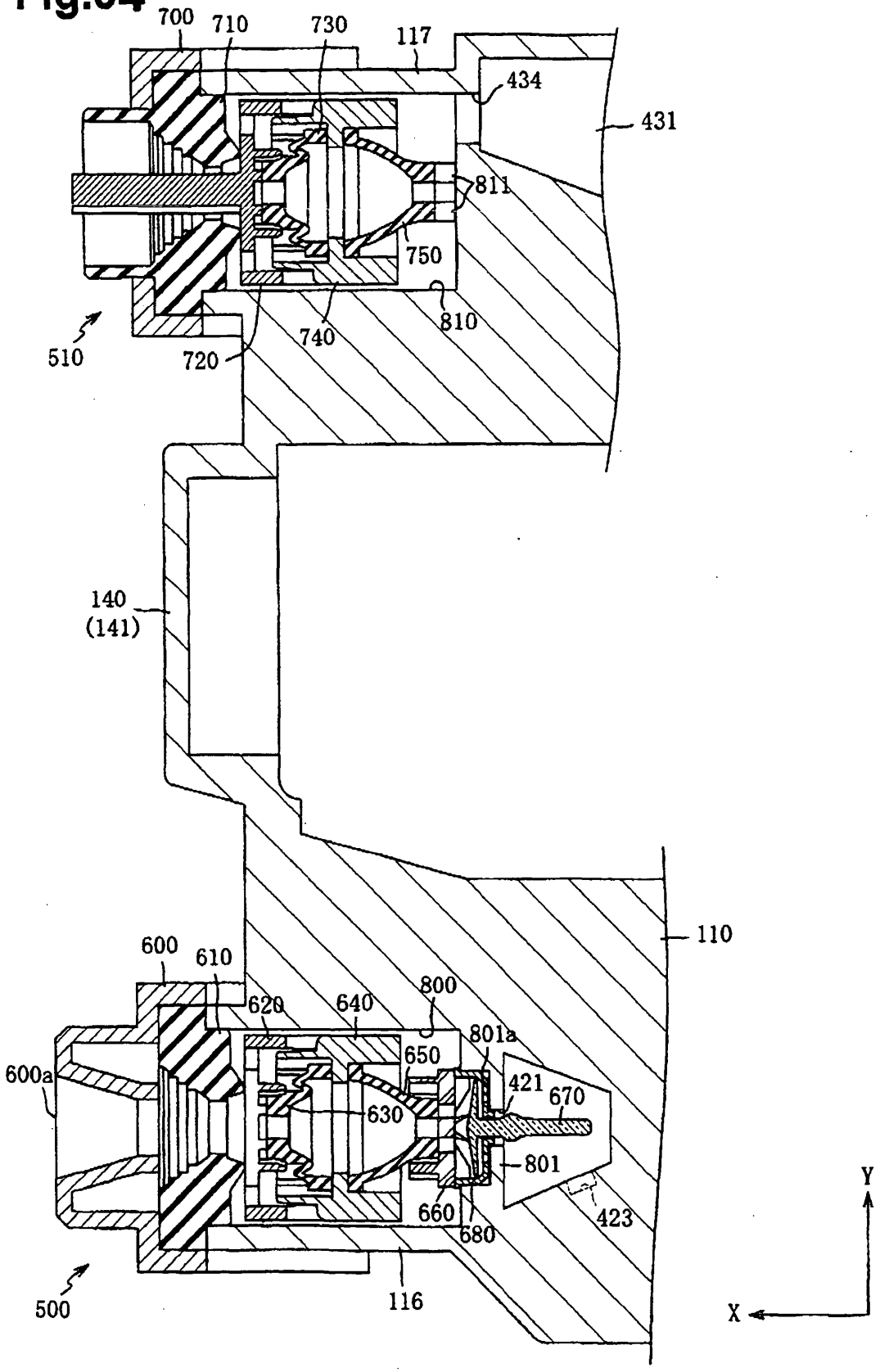
700
710
730
117
434
431
811
750
810
740
720
510
140
(141)
110
600
610
620
640
800
801a
650
421
670
600a
630
801
660
680
423
500
116
Y
X

Fig.35

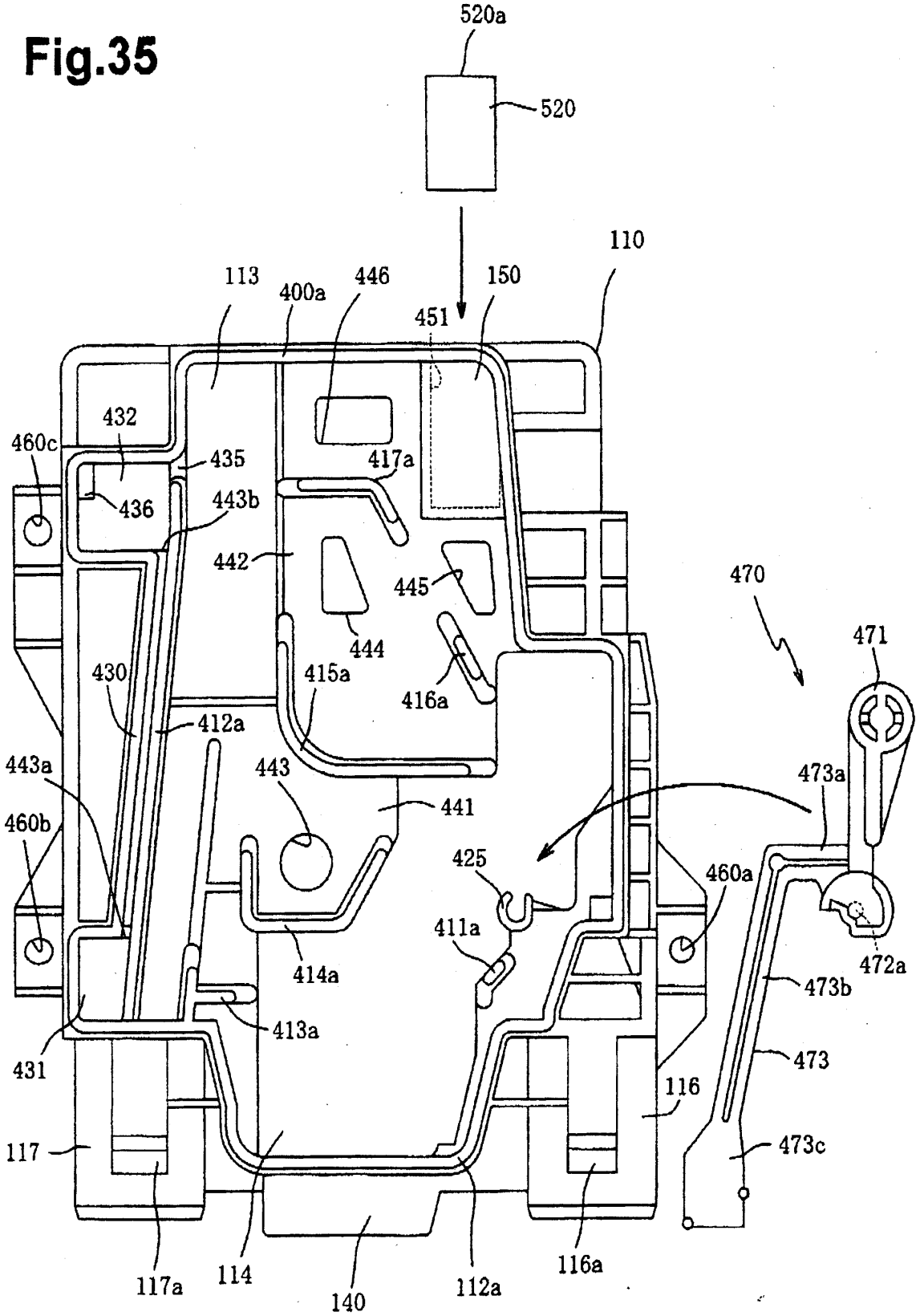
520a
520
110
113
400a
446
150
451
432
460c
435
417a
436
443b
442
445
470
471
444
430
415a
416a
412a
443a
443
473a
441
460b
425
460a
411a
472a
414a
473b
413a
431
473
116
117
473c
117a
114
140
112a
116a

Fig.36

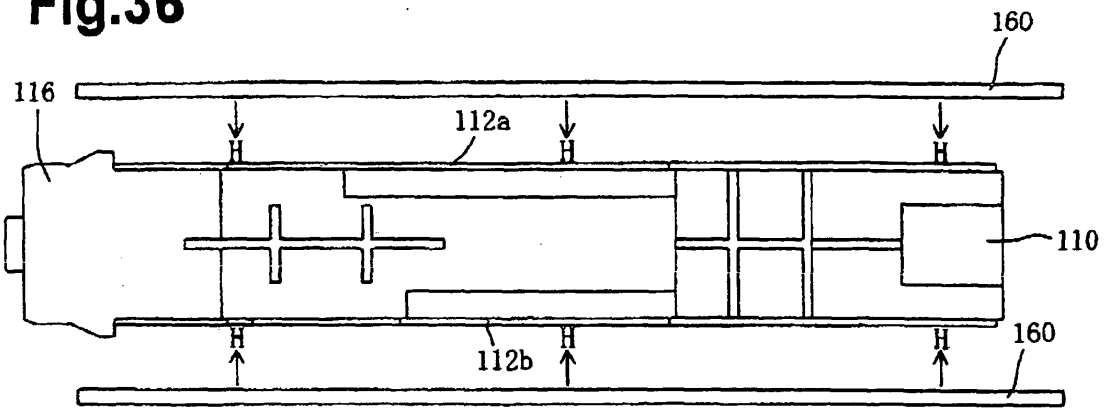

(a)

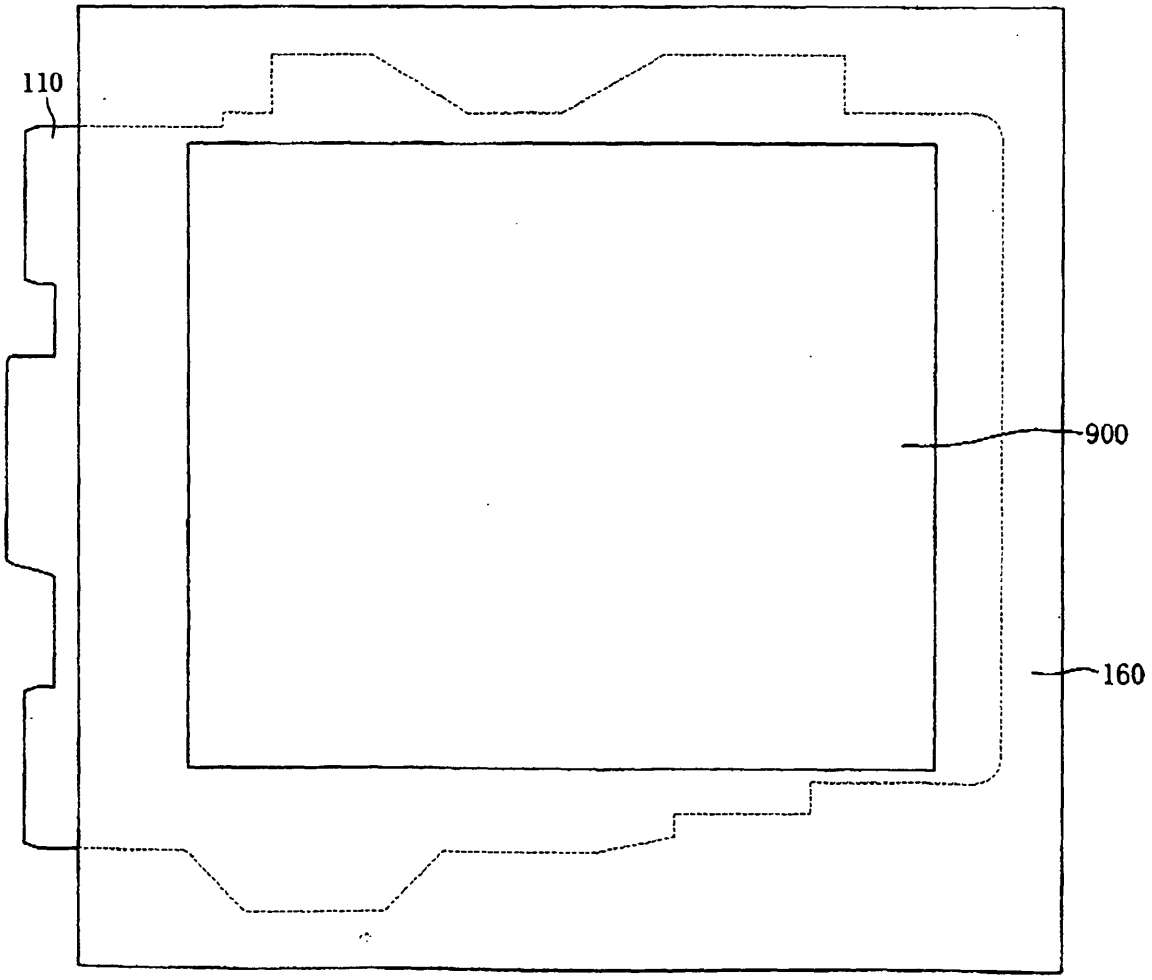

(b)

Fig.37

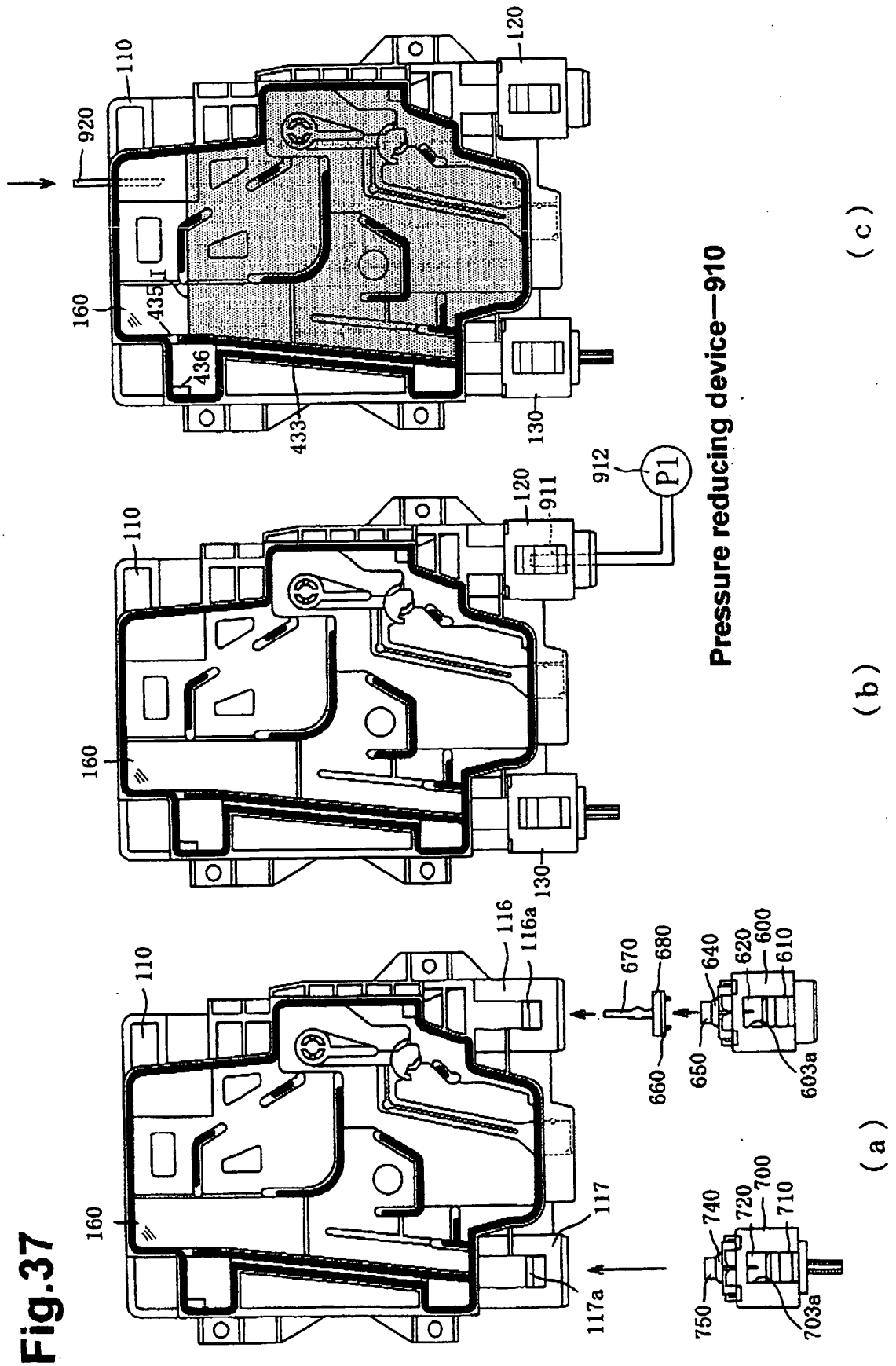
110
920
160
435
436
433
120
130
(c)
110
160
120
911
912
P1
130
Pressure reducing device—910
(b)
110
160
116
116a
117
117a
670
680
660
640
650
620
600
610
603a
740
720
700
710
750
703a
(a)

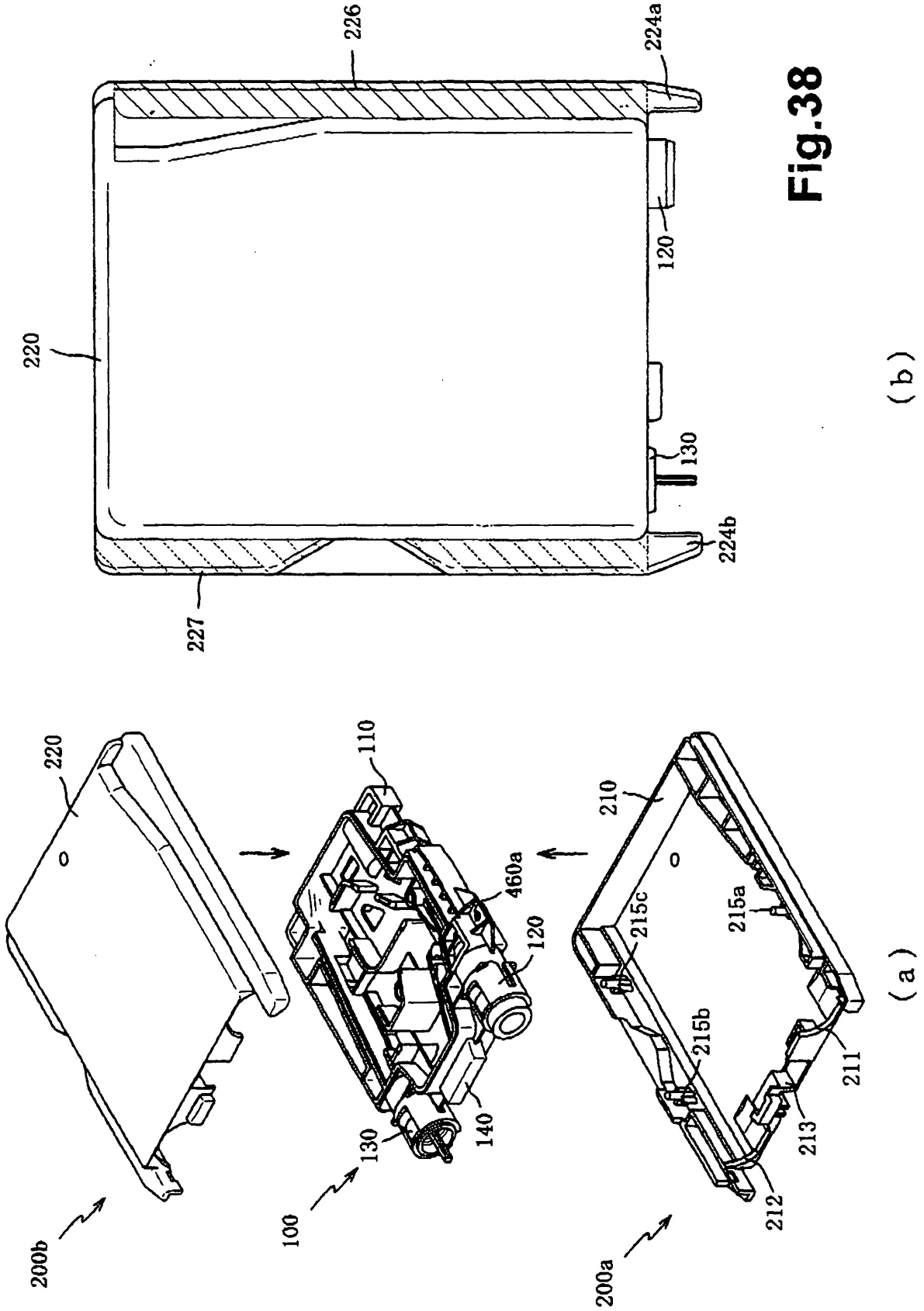
226
224a
220
120
130
224b
227
(b)
220
110
460a
120
210
215c
215a
215b
211
213
212
130
140
100
200b
200a
(a)

Fig.38

Fig.39

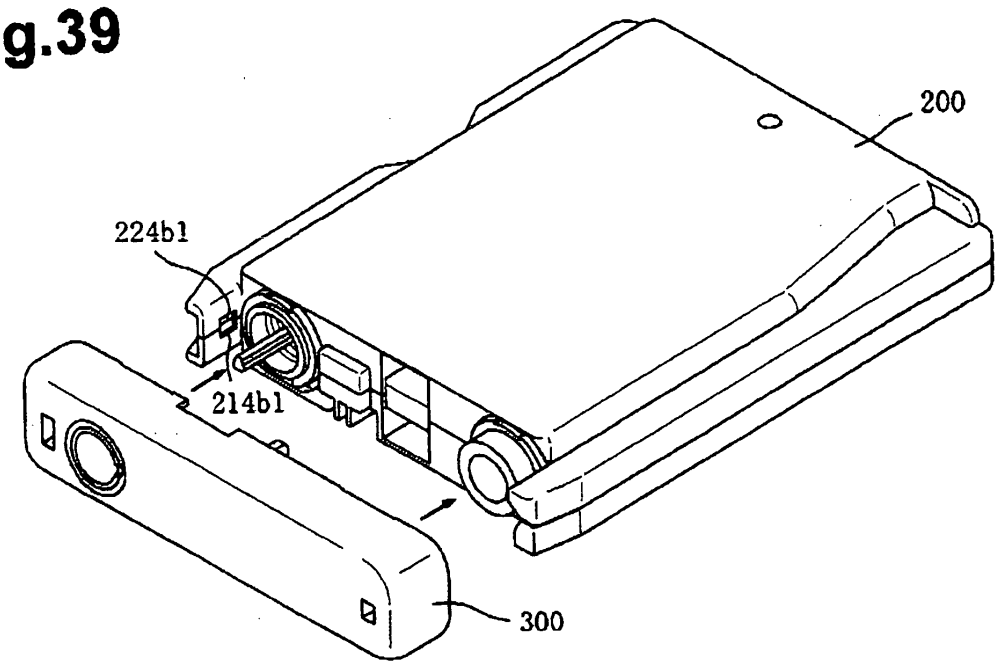
200
224b1
214b1
300

(a)

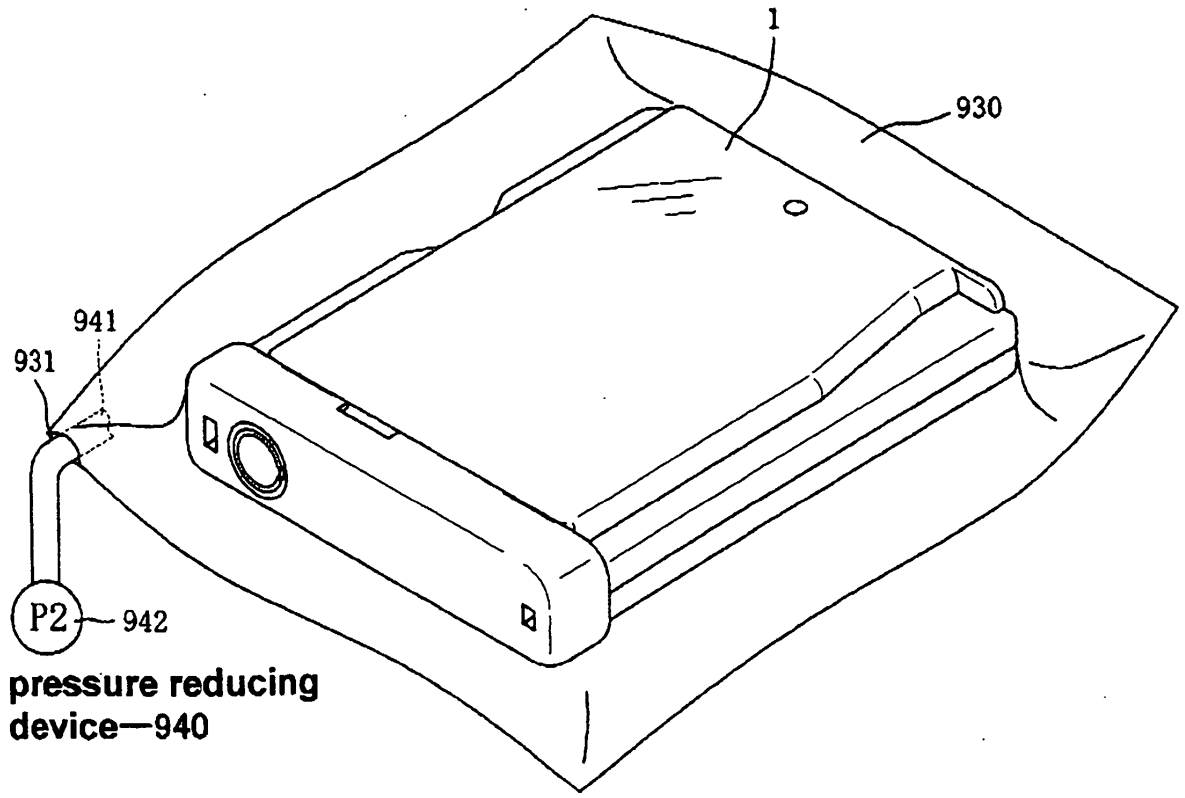
1
930
941
931
P2
942
pressure reducing
device—940

(b)

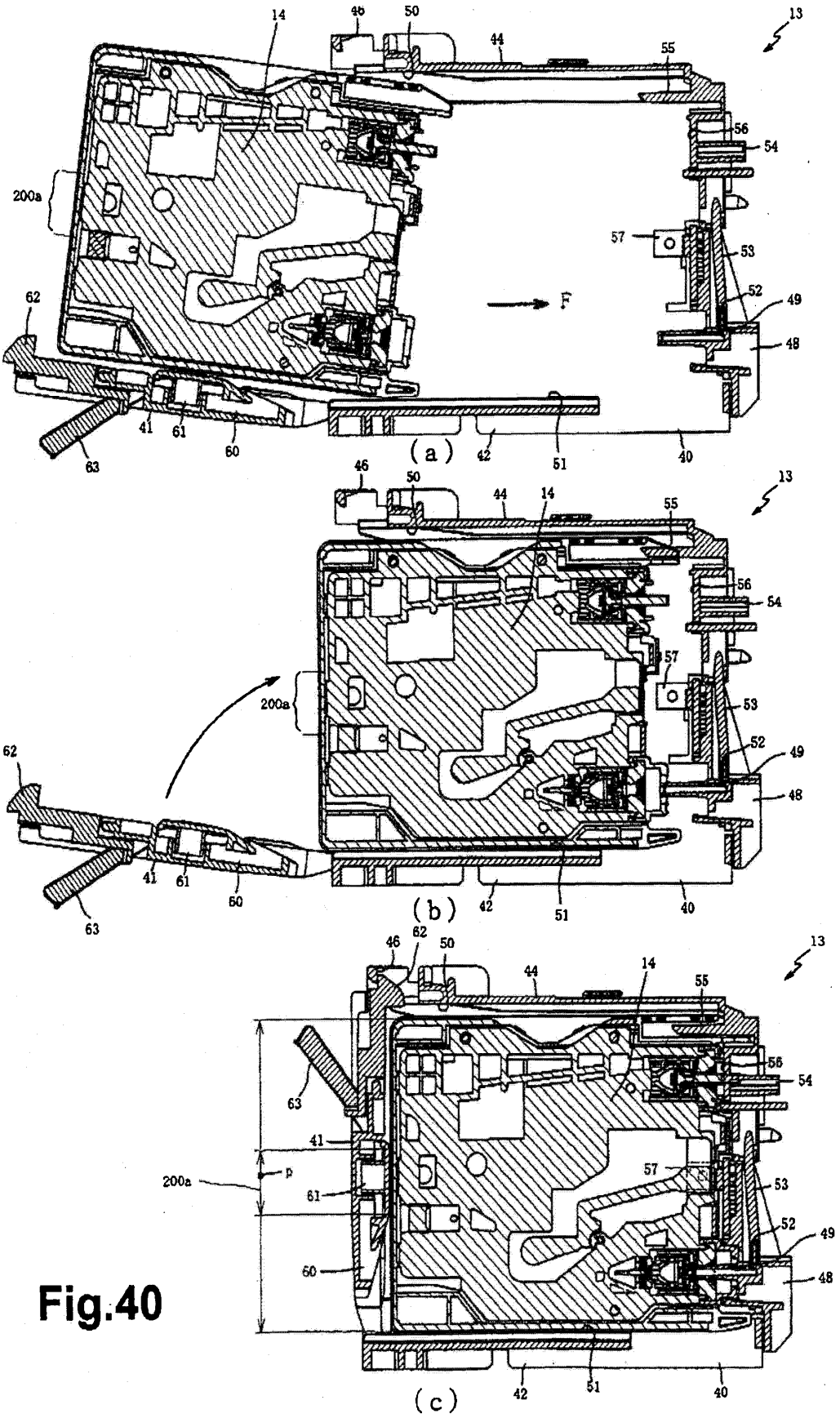
13
14
46
50
44
55
56
54
200a
57
53
52
49
48
62
F
41
61
60
63
(a)
42
51
40
(b)
(c)
p

Fig.40

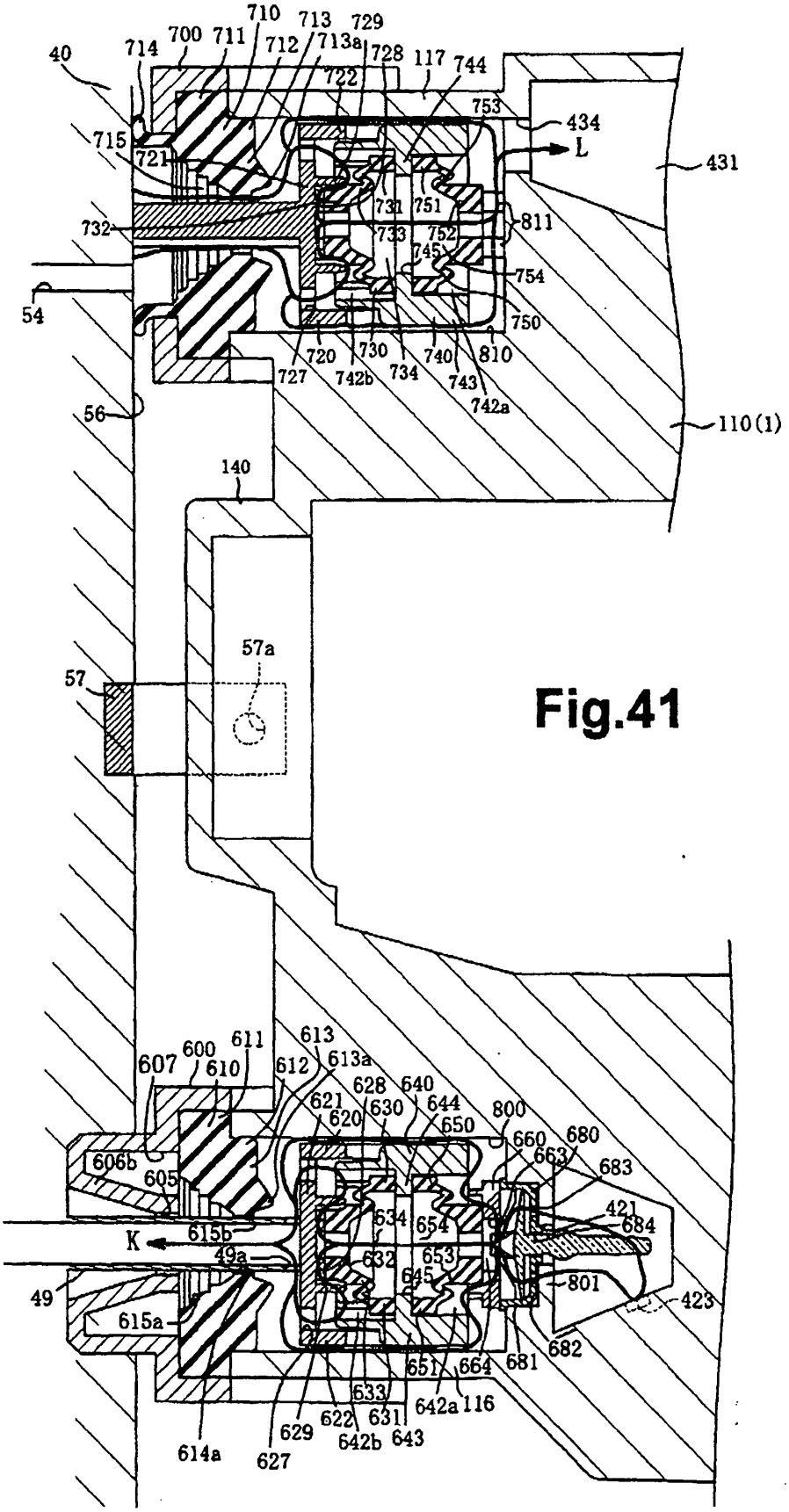
40
714
700
711
710
712
713
713a
729
728
117
744
722
753
434
L
431
715
721
731
751
811
732
733
752
745
754
54
750
720
730
740
810
727
742b
734
743
742a
56
110(1)
140
57a
57
607
600
610
611
612
613
613a
628
640
621
630
644
620
650
800
660
680
663
683
606b
605
421
684
634
654
615b
K
49a
632
653
645
801
49
423
615a
682
651
664
681
633
642a
116
629
622
631
643
642b
614a
627

Fig.41

Fig.42

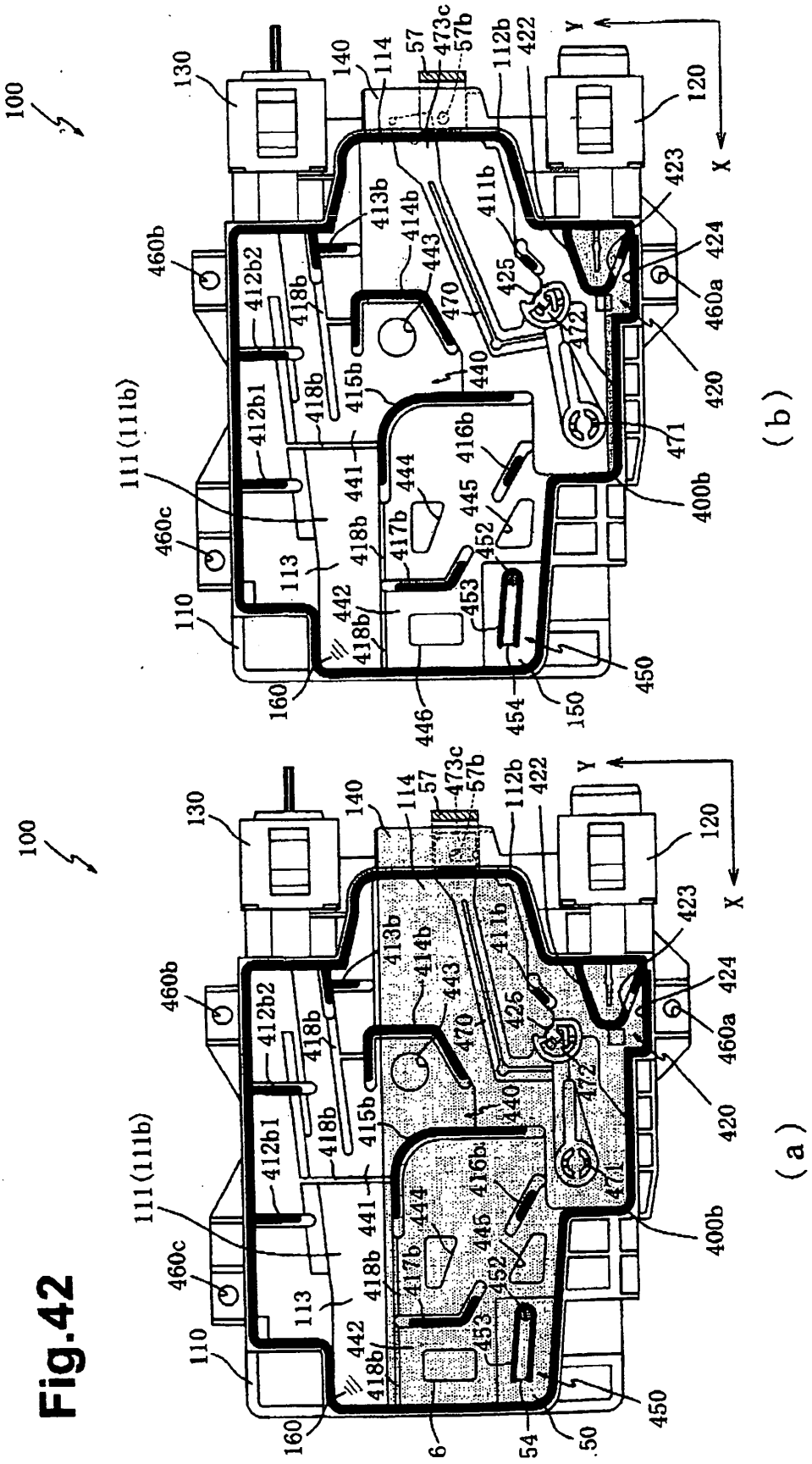
100
130
140
114
57
473c
57b
112b
422
Y
120
X
423
424
460a
420
471
400b
450
150
454
446
160
110
460c
111(111b)
412b1
412b2
418b
413b
414b
443
411b
425
470
472
440
415b
441
444
416b
445
452
453
417b
442
113
460b
(b)
6
54
50
(a)

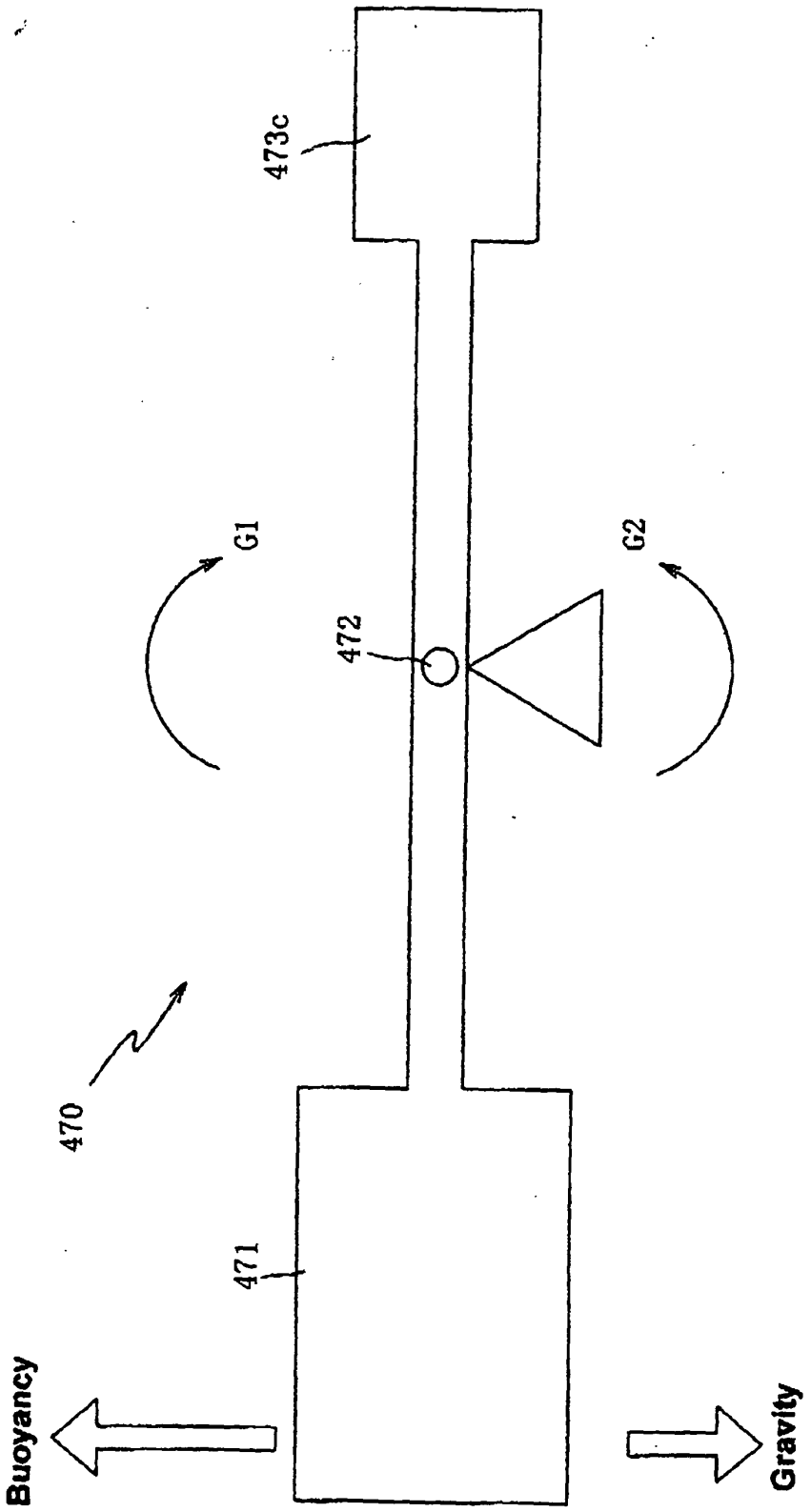

Fig.43

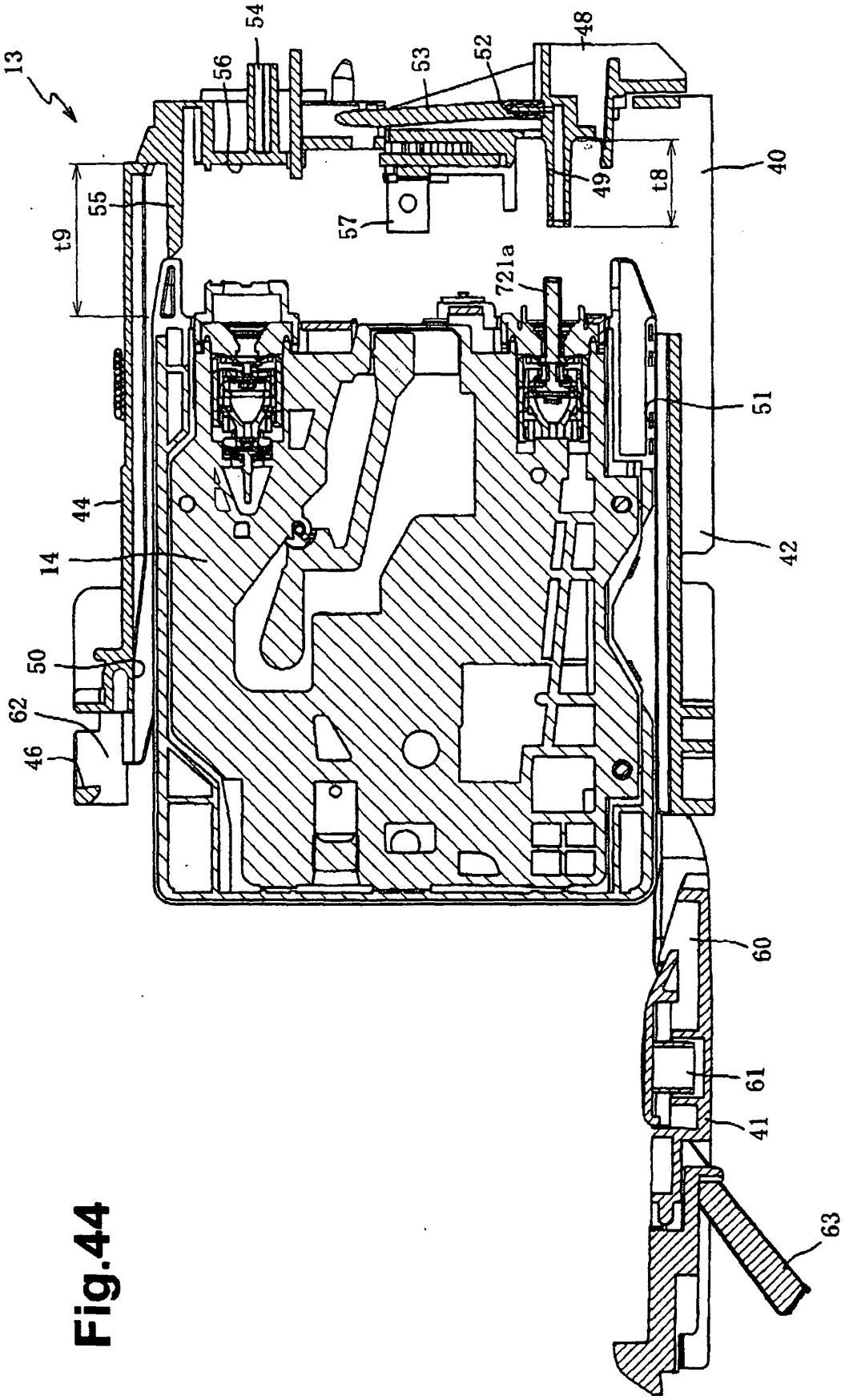
13
54
56
53
52
48
55
t9
57
49
t8
40
721a
51
44
14
42
50
62
46
60
61
41
63

Fig.44

Fig.45

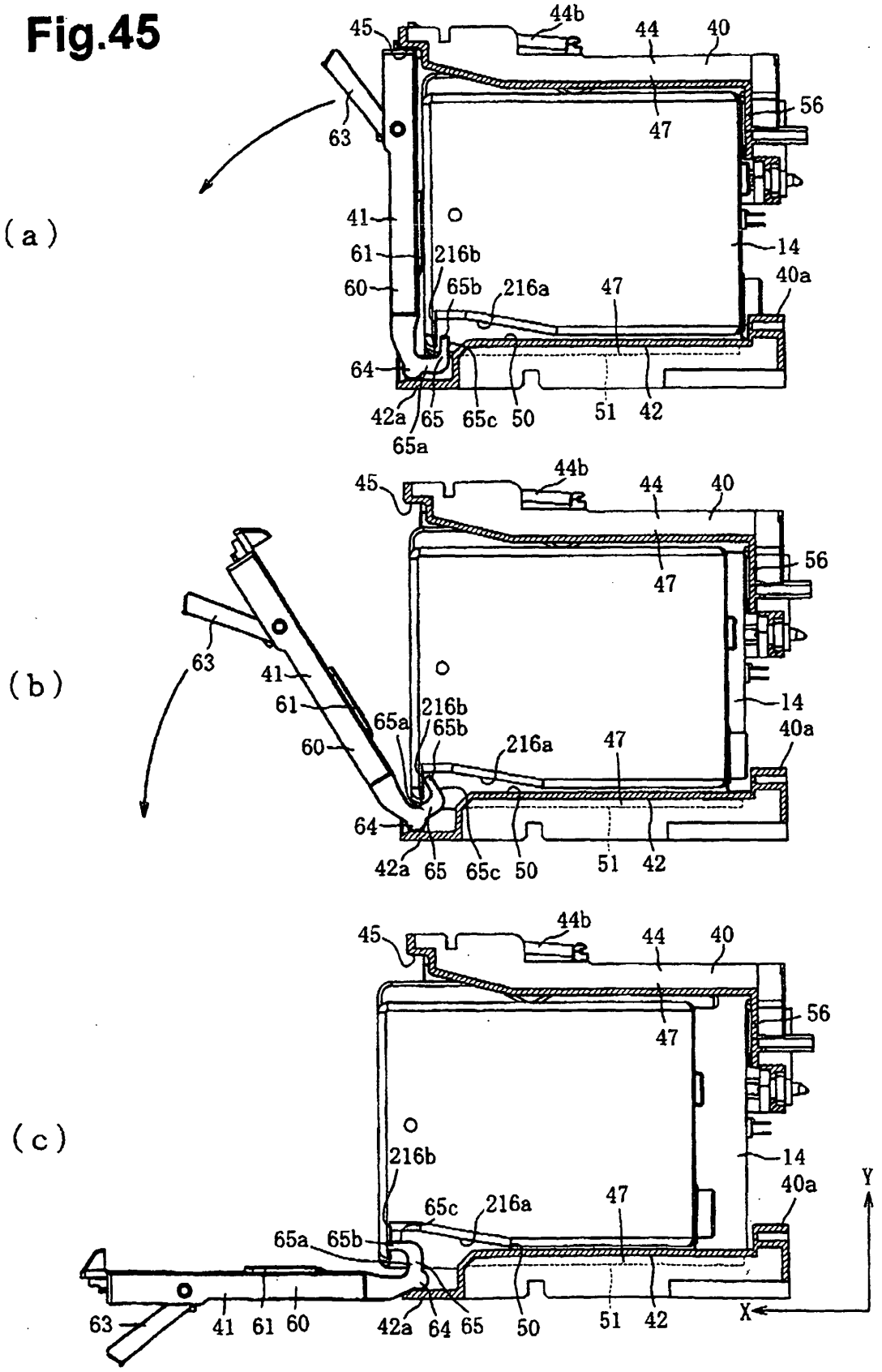
(a)
45
44b
44
40
56
47
63
41
61
216b
60
65b
216a
47
14
40a
64
42a
65
65c
50
51
42
65a
(b)
45
44b
44
40
56
47
63
41
61
65a
216b
65b
60
216a
47
14
40a
64
42a
65
65c
50
51
42
(c)
45
44b
44
40
56
47
216b
14
40a
Y
65c
216a
47
65a
65b
63
41
61
60
42a
64
65
50
51
42
X

Fig.46

(a)

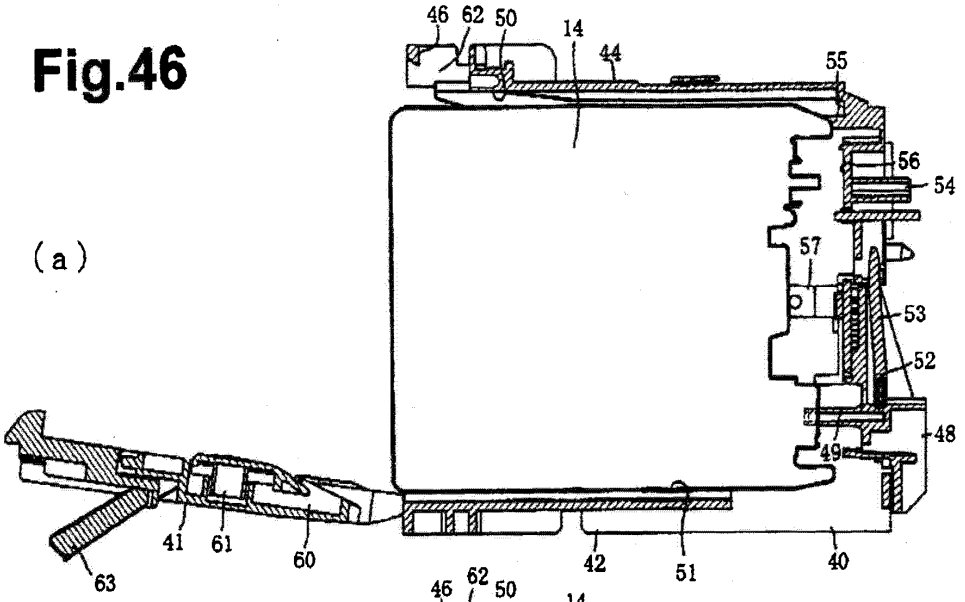
46
62
50
14
44
55
56
54
57
53
52
48
49
41
61
60
42
51
40
63

(b)

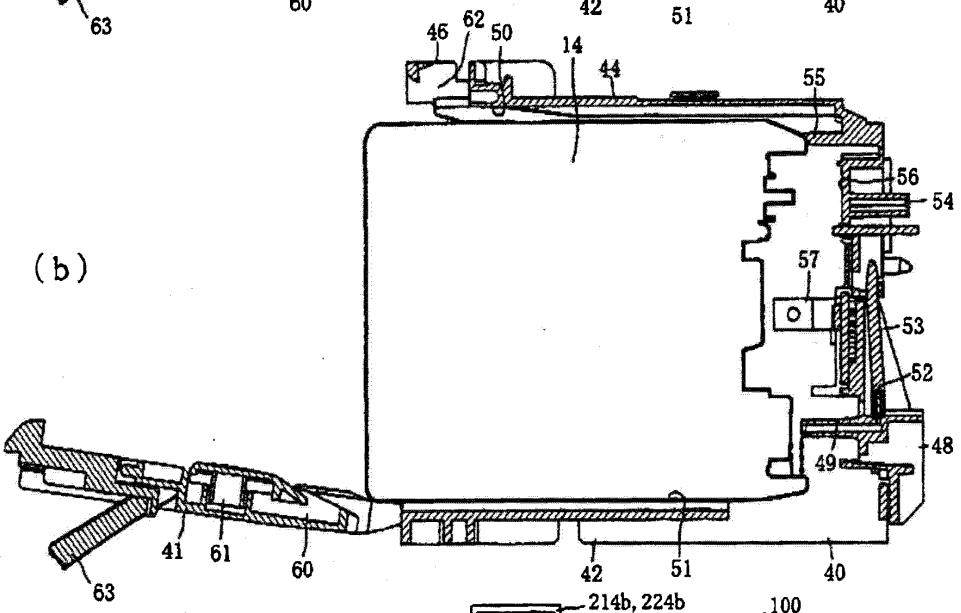
46
62
50
14
44
55
56
54
57
53
52
48
49
41
61
60
42
51
40
63

(c)

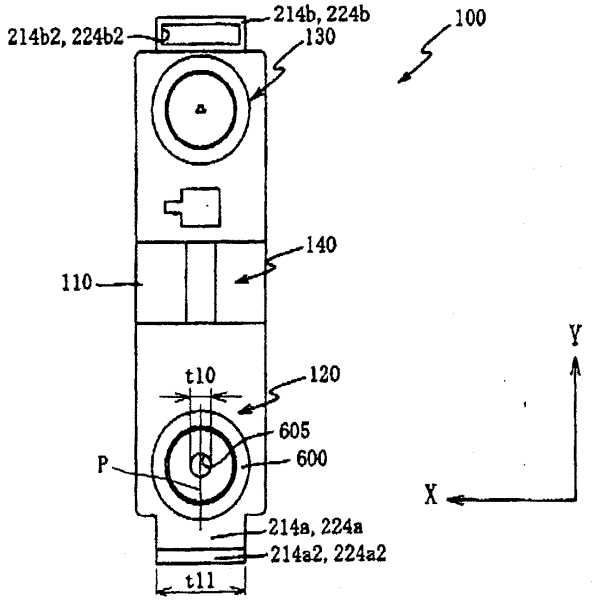
214b, 224b
214b2, 224b2
130
100
140
110
t10
120
605
600
P
214a, 224a
214a2, 224a2
t11
Y
X

Fig.47

(a)

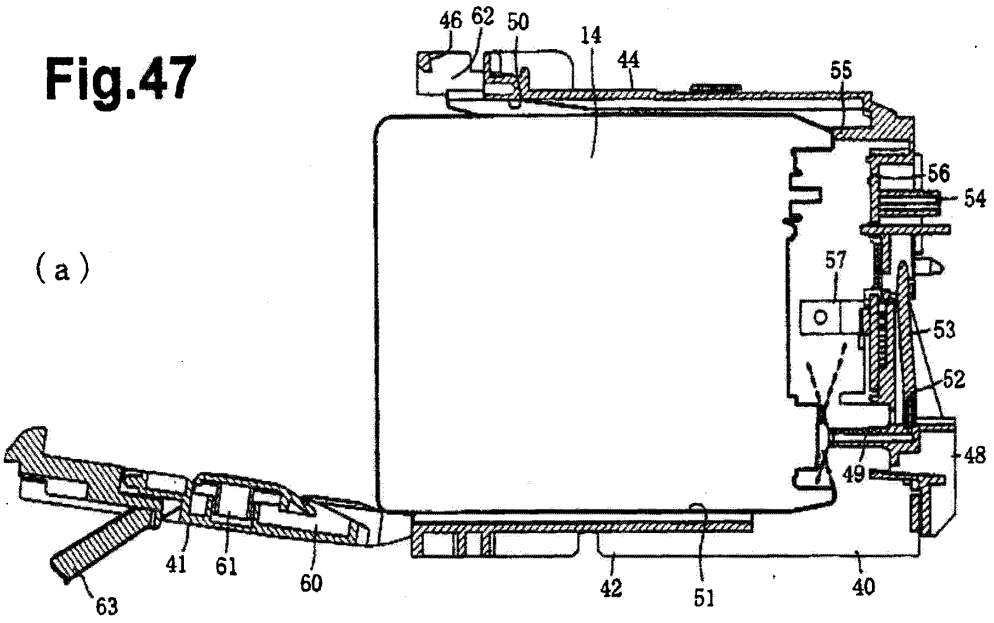
46
62
50
14
44
55
56
54
57
53
52
48
49
41
61
60
63
42
51
40

(b)

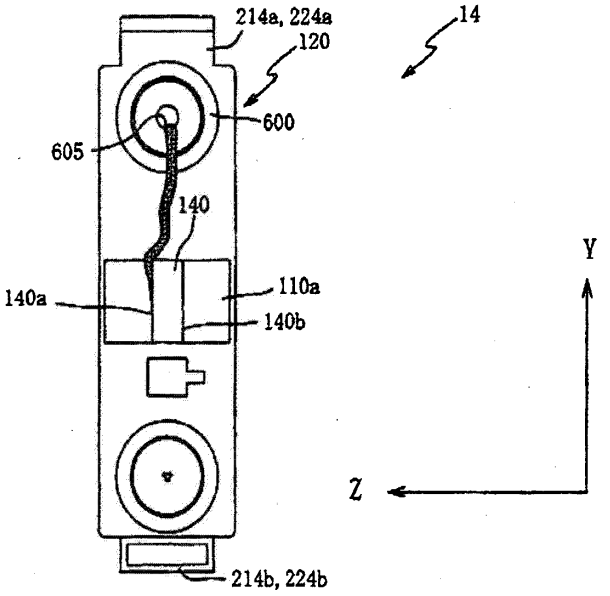
214a, 224a
120
14
600
605
140
140a
110a
140b
Y
Z
214b, 224b

(c)

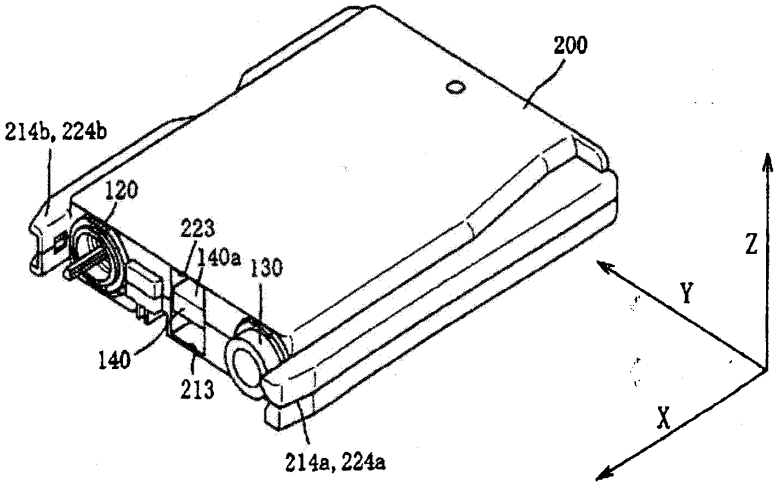
200
214b, 224b
120
223
140a
130
140
213
214a, 224a
Z
Y
X

Fig.48

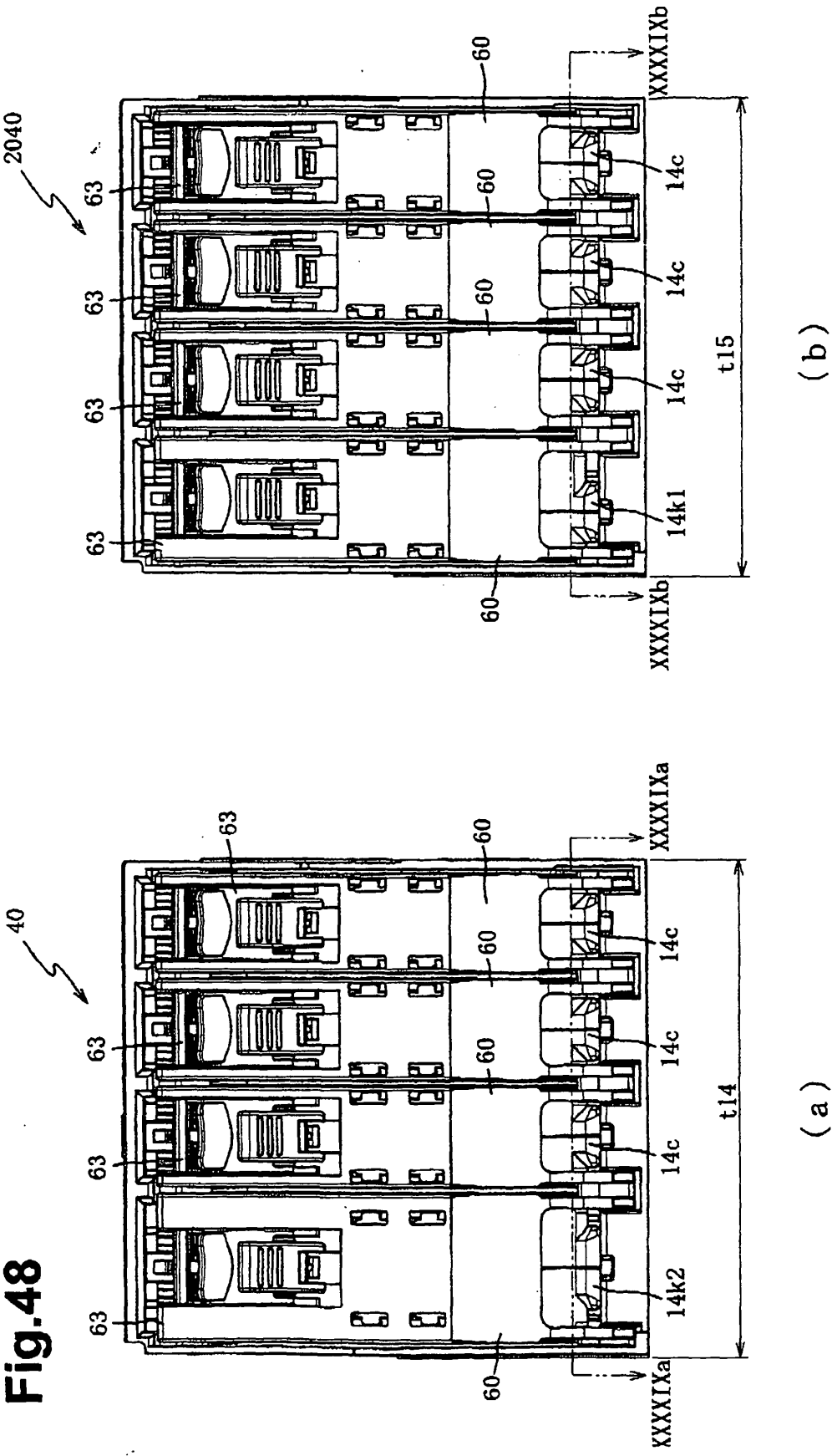

Fig.49

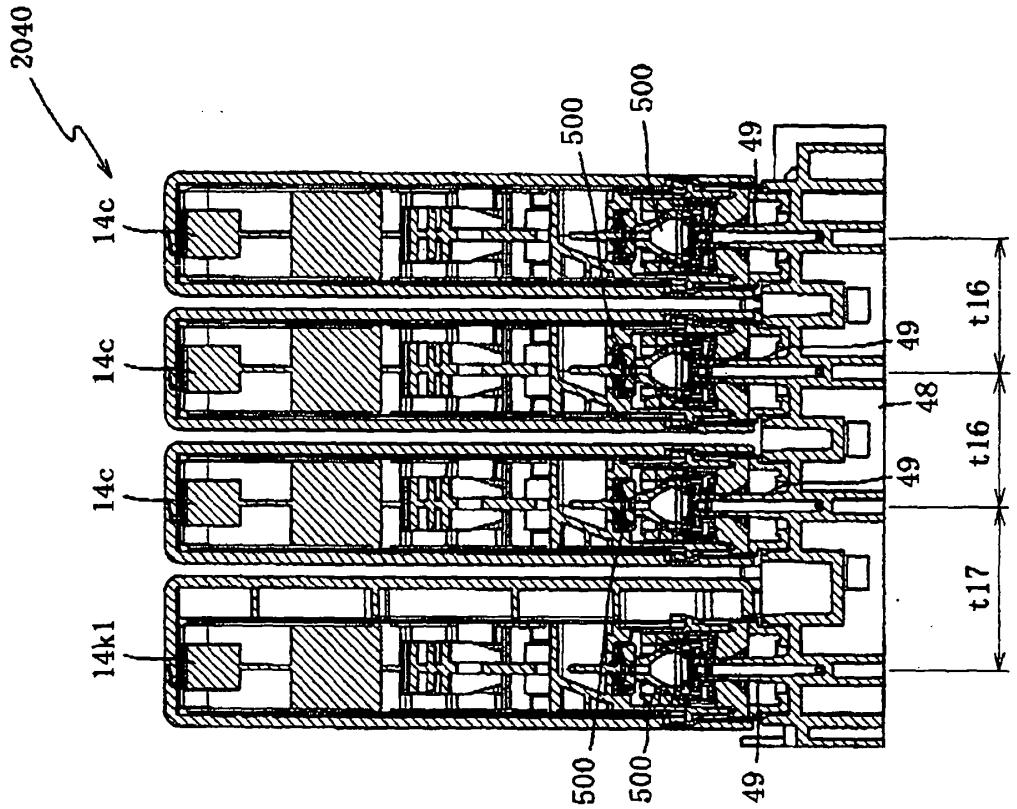
2040
14c
14c
14c
14k1
500
500
500
500
49
49
49
49
48
t16
t16
t17

(b)

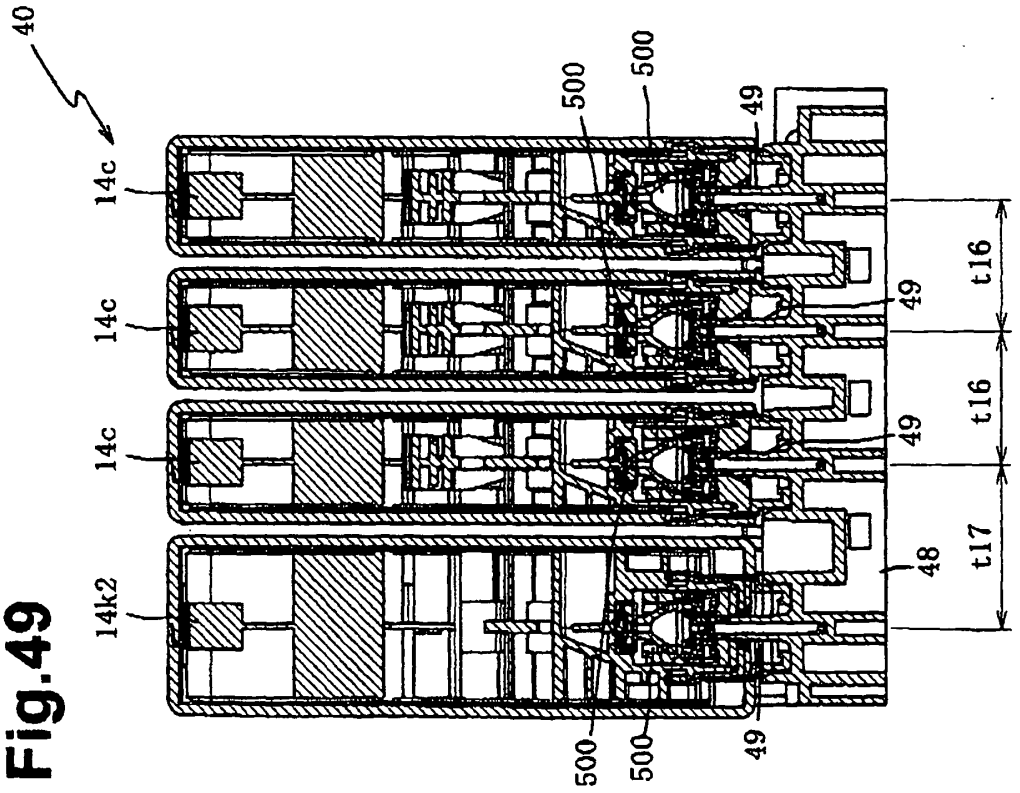
40
14c
14c
14c
14k2
500
500
500
500
49
49
49
49
48
t16
t16
t17

(a)

Fig.50

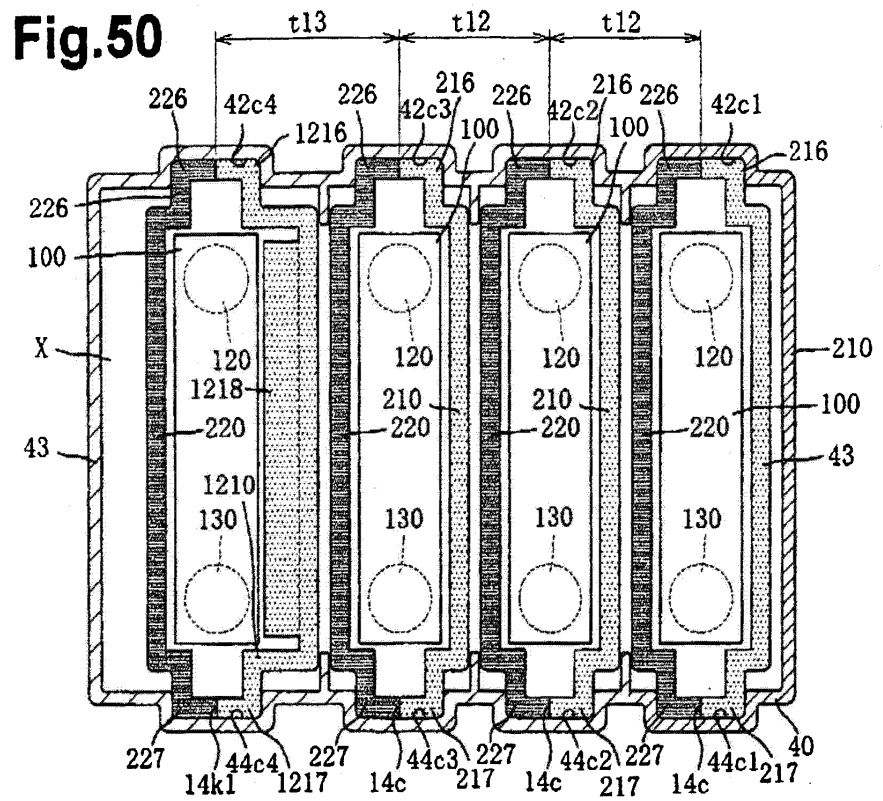
t13
t12
t12
226
42c4
1216
226
42c3
216
100
226
42c2
216
100
226
42c1
216
226
100
X
43
120
1218
220
1210
130
210
40
227
14k1
44c4
1217
14c
44c3
217
44c2
44c1

(a)

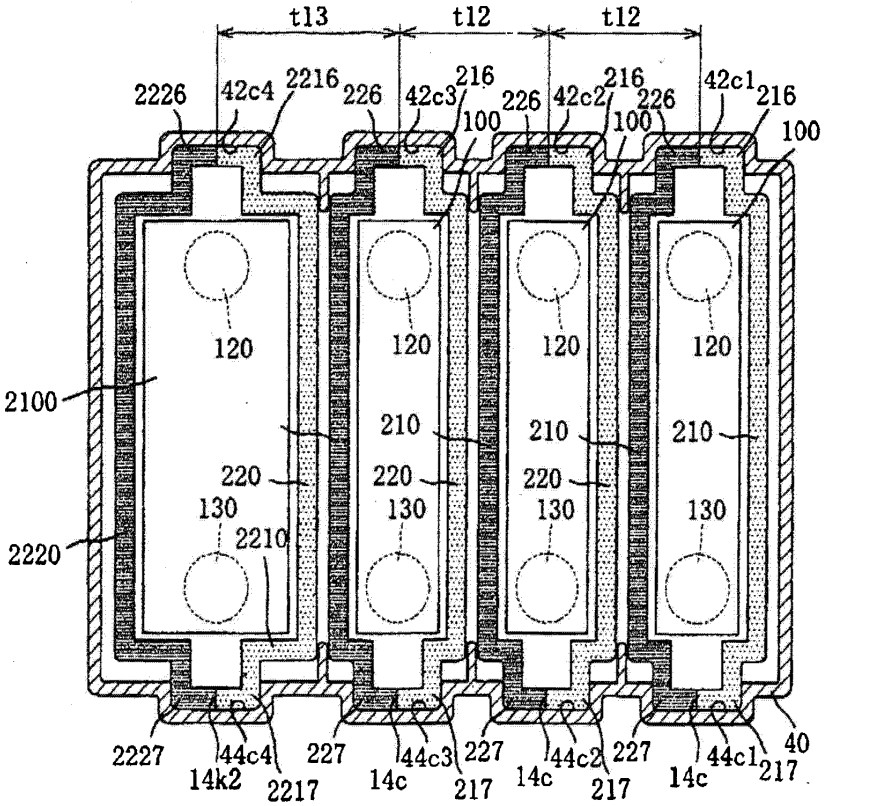
t13
t12
t12
2226
42c4
2216
226
42c3
216
100
226
42c2
216
100
226
42c1
216
100
2100
2220
120
210
220
130
2210
40
2227
14k2
44c4
2217
227
14c
44c3
217
44c2
44c1

(b)

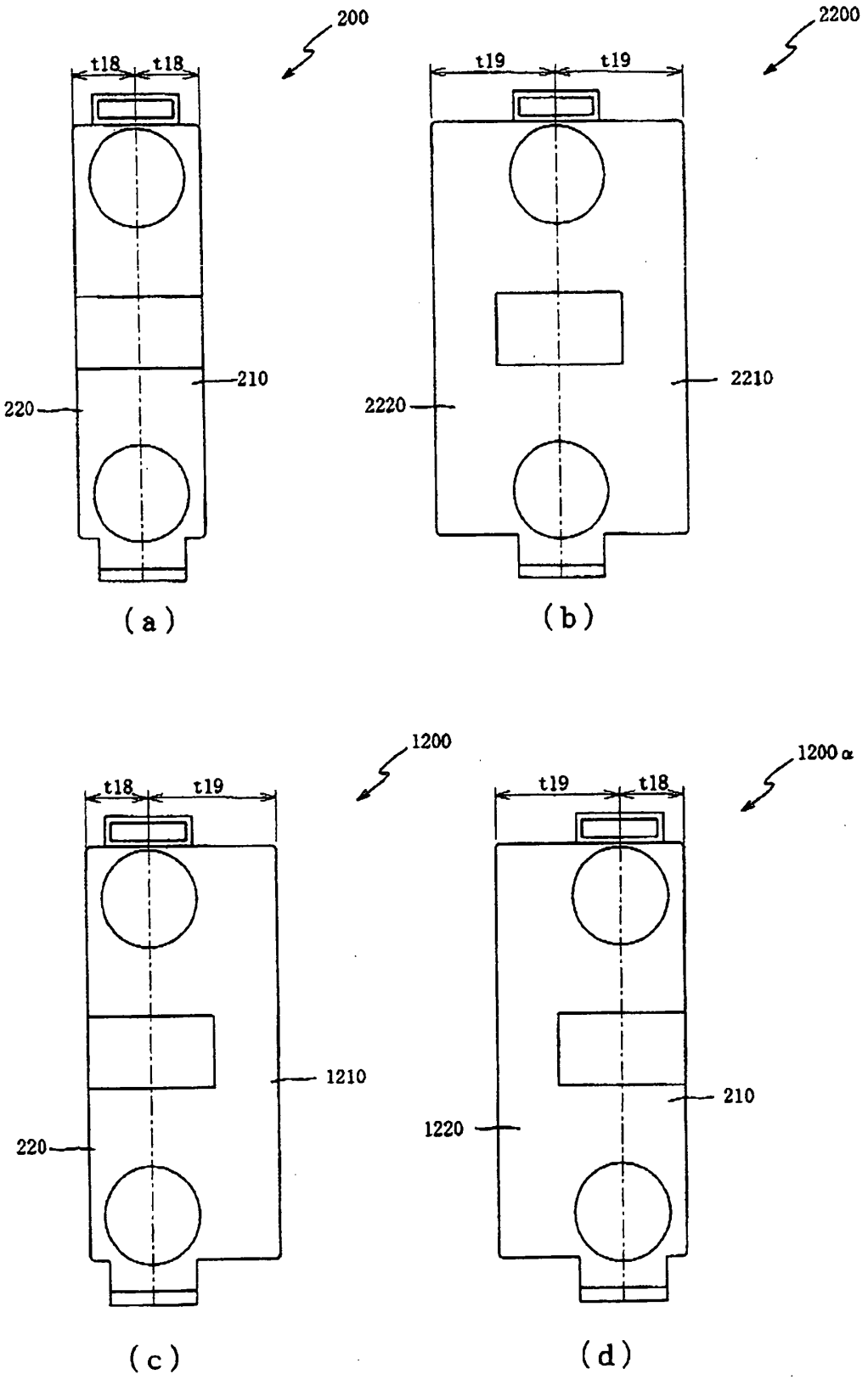
200
t18
t18
210
220
(a)
2200
t19
t19
2210
2220
(b)
1200
t18
t19
1210
220
(c)
1200α
t19
t18
210
1220
(d)

Fig.51

Fig.52

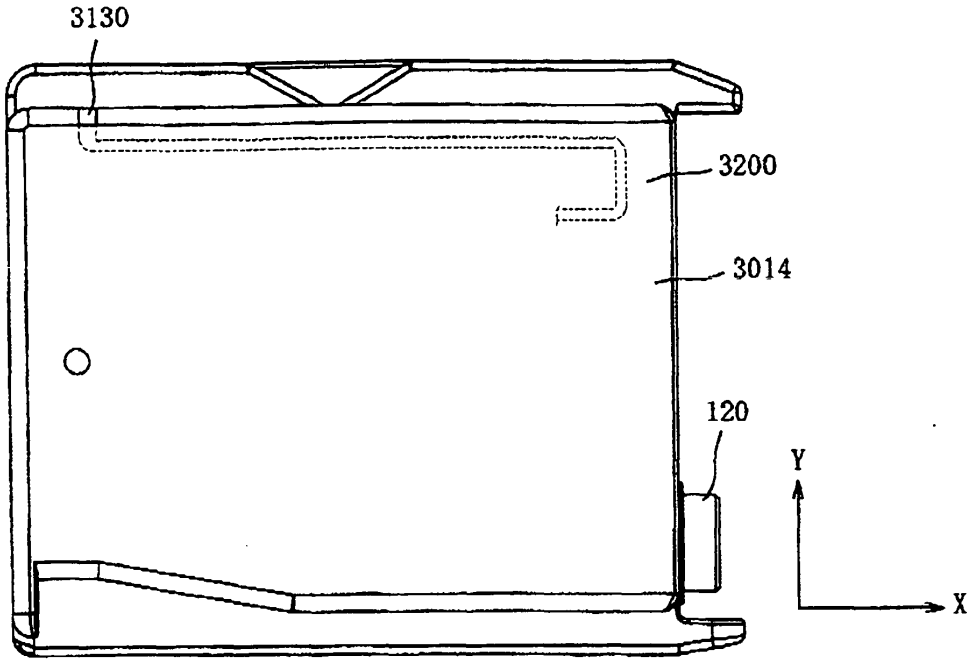
3130
3200
3014
120
Y
X

(a)

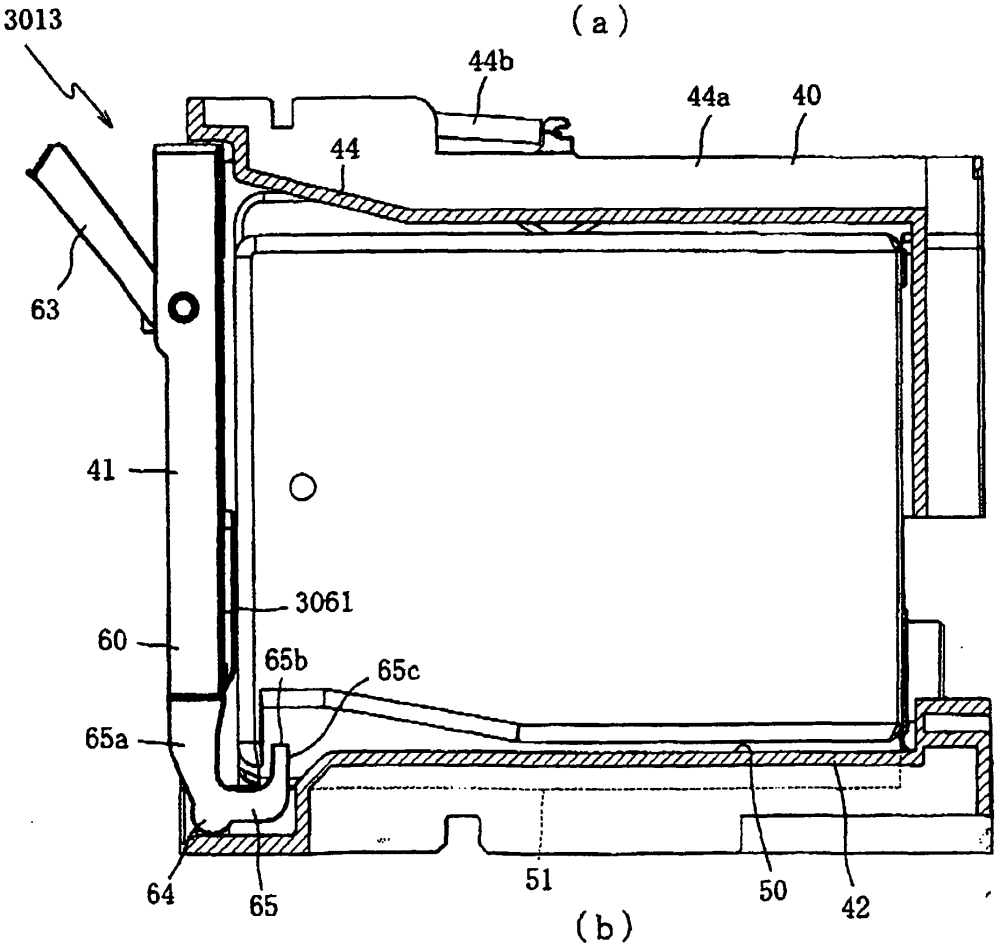
3013
44b
44a
40
44
63
41
3061
60
65b
65c
65a
64
65
51
50
42

(b)

Fig.53

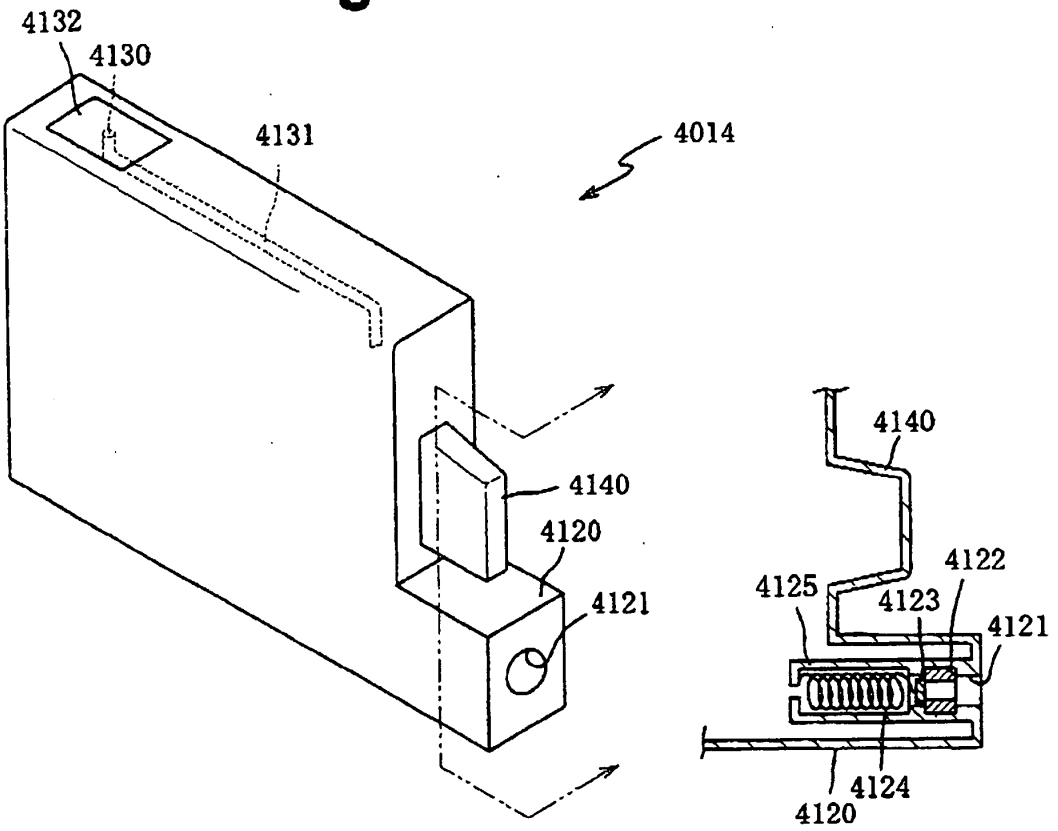
4132
4130
4131
4014
4140
4120
4121
4140
4122
4125
4123
4121
4124
4120

(a)

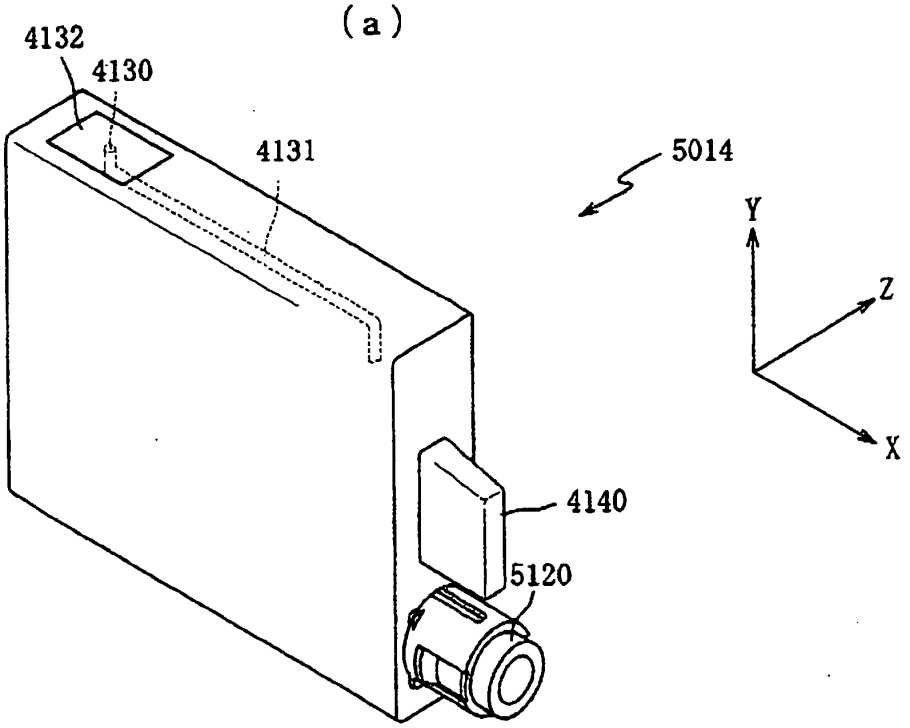
4132
4130
4131
5014
Y
Z
X
4140
5120

(b)

Fig.54

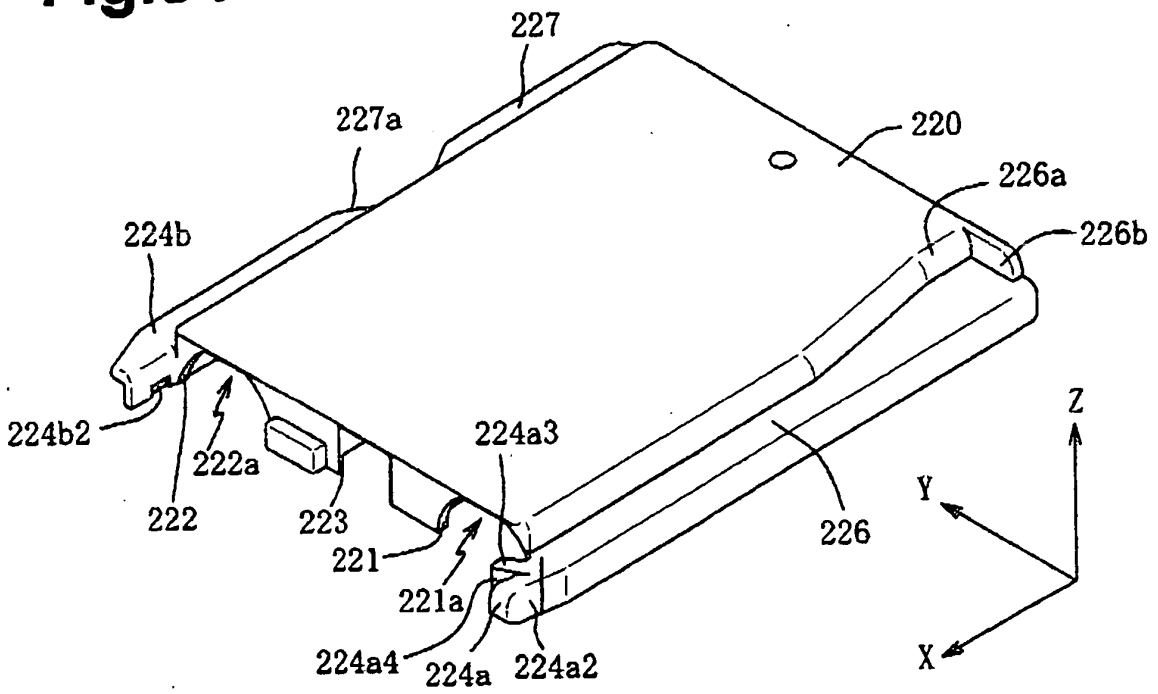
227
227a
220
226a
226b
224b
224b2
222a
222
223
224a3
221
221a
224a4
224a
224a2
226
Z
Y
X

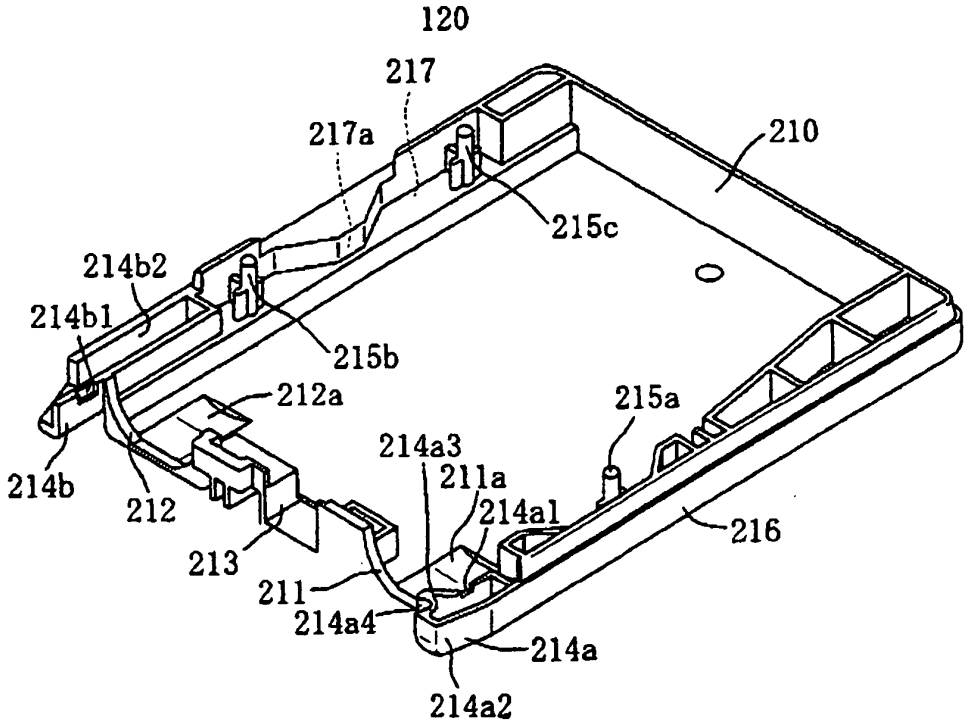
120
217
217a
210
215c
214b2
214b1
215b
212a
215a
214a3
211a
214a1
214b
212
213
216
211
214a4
214a
214a2

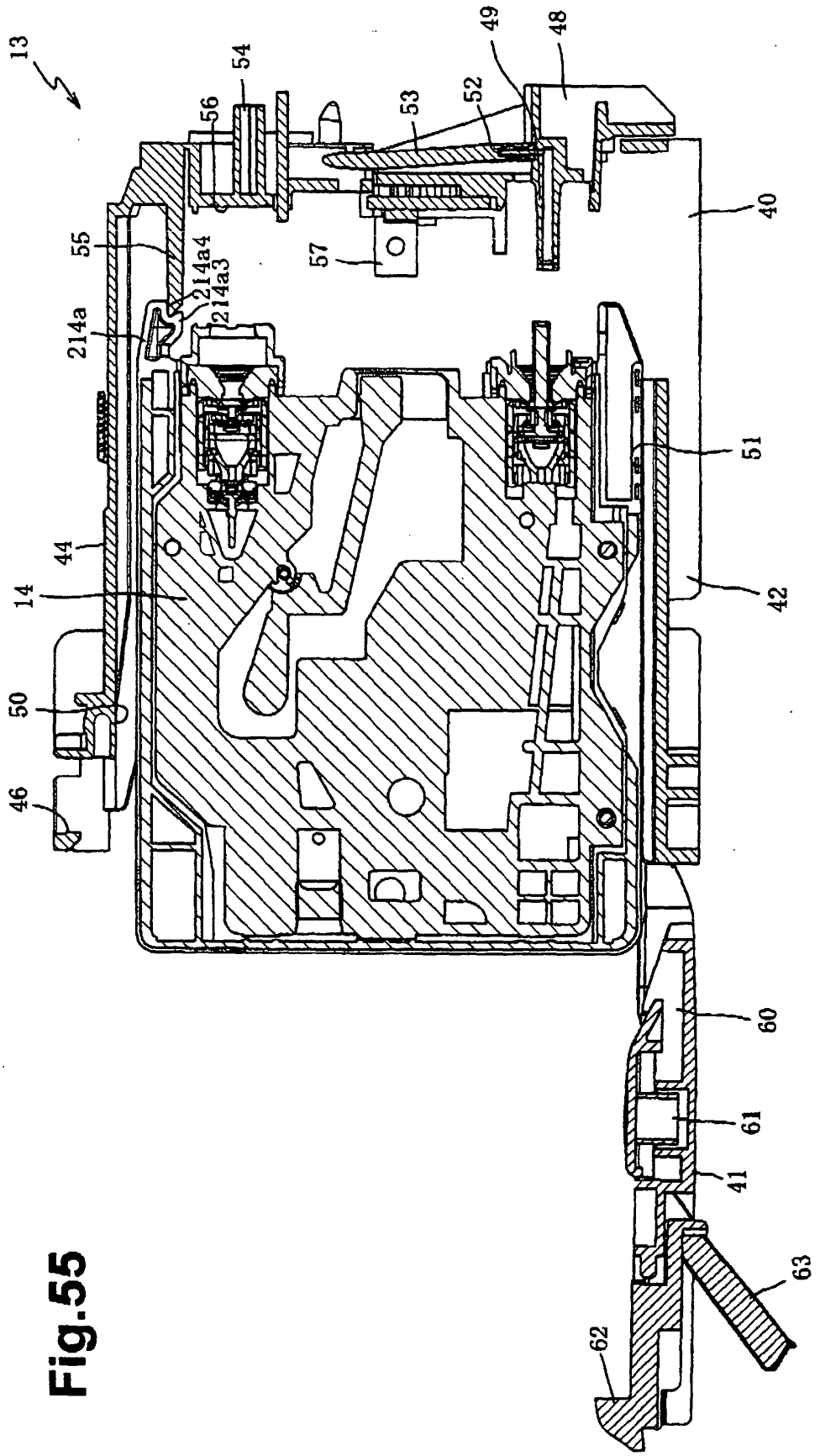
13
54
56
55
214a
214a4
214a3
44
14
50
46
49
48
52
53
57
40
51
42
60
61
41
63
62

Fig.55

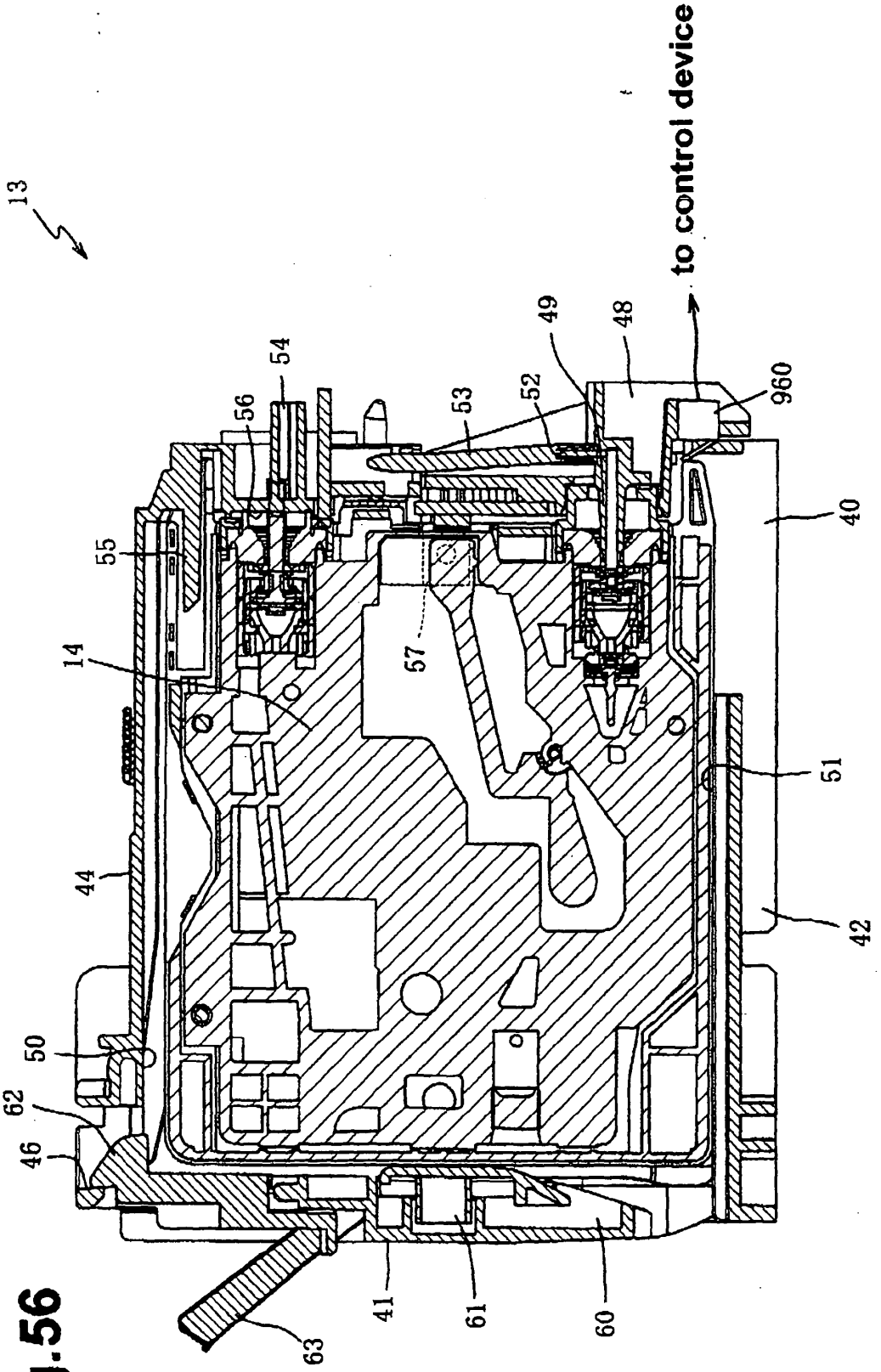
13
to control device
49
48
54
53
52
960
56
40
55
57
14
51
44
42
50
62
46
41
61
60
63

Fig.56

Fig.57

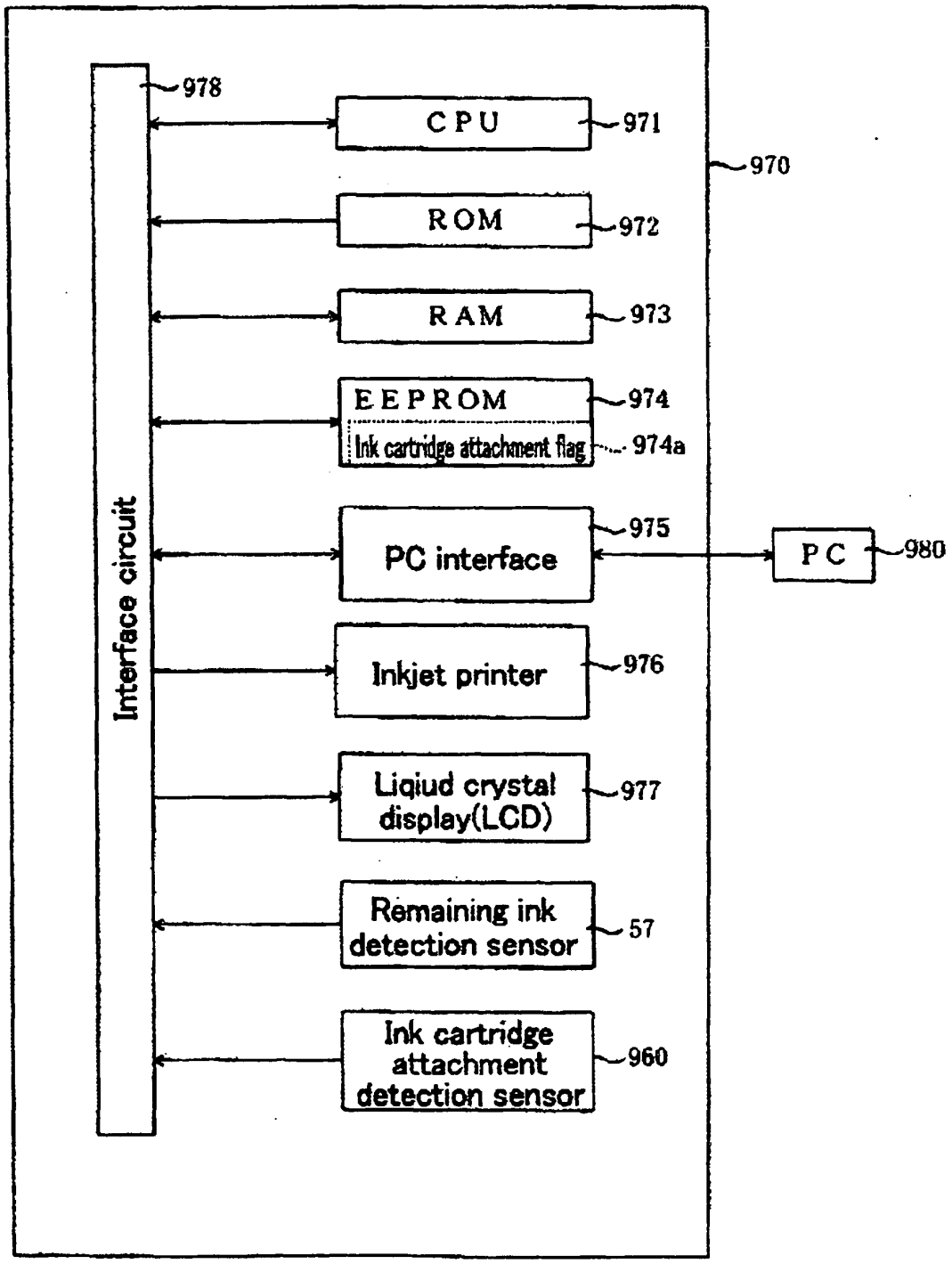
978
CPU
971
970
ROM
972
RAM
973
EEPROM
974
Ink cartridge attachment flag
974a
Interface circuit
PC interface
975
PC
980
Inkjet printer
976
Liqiud crystal display(LCD)
977
Remaining ink detection sensor
57
Ink cartridge attachment detection sensor
960

Fig.58 (Process in the control substrate)

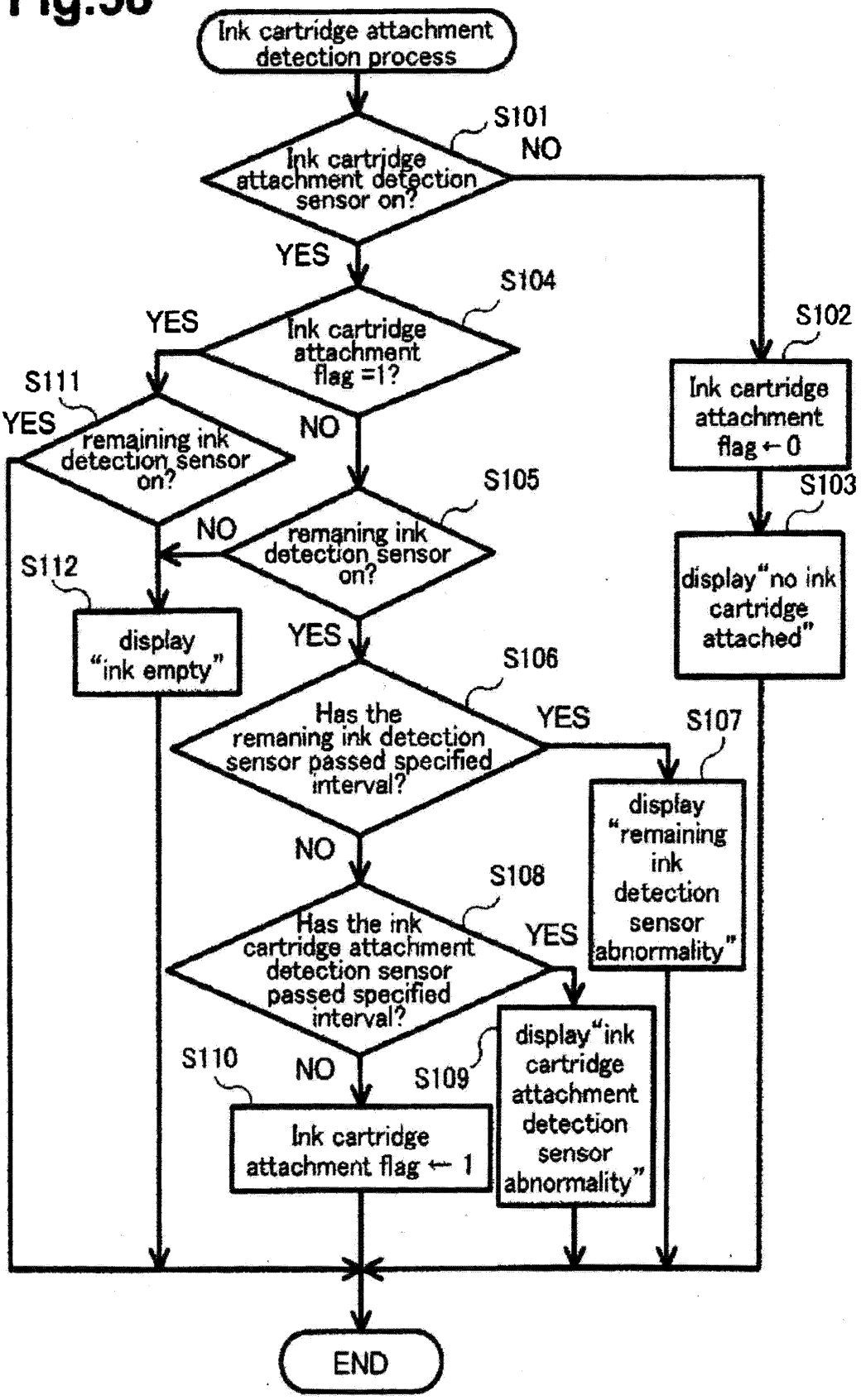

Fig.59

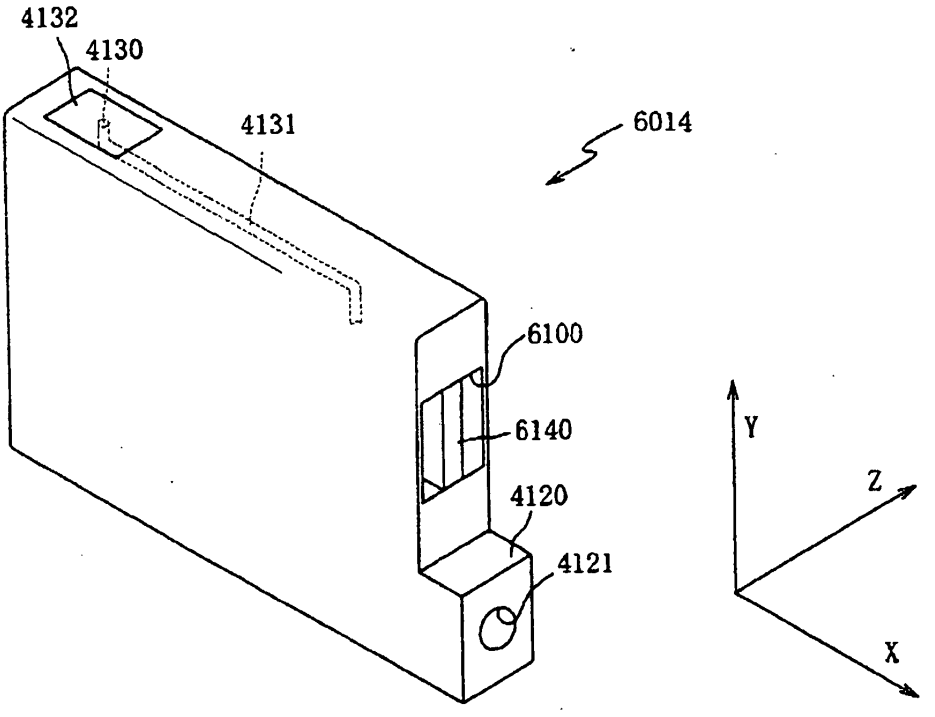
4132
4130
4131
6014
6100
6140
4120
4121
Y
Z
X

(a)

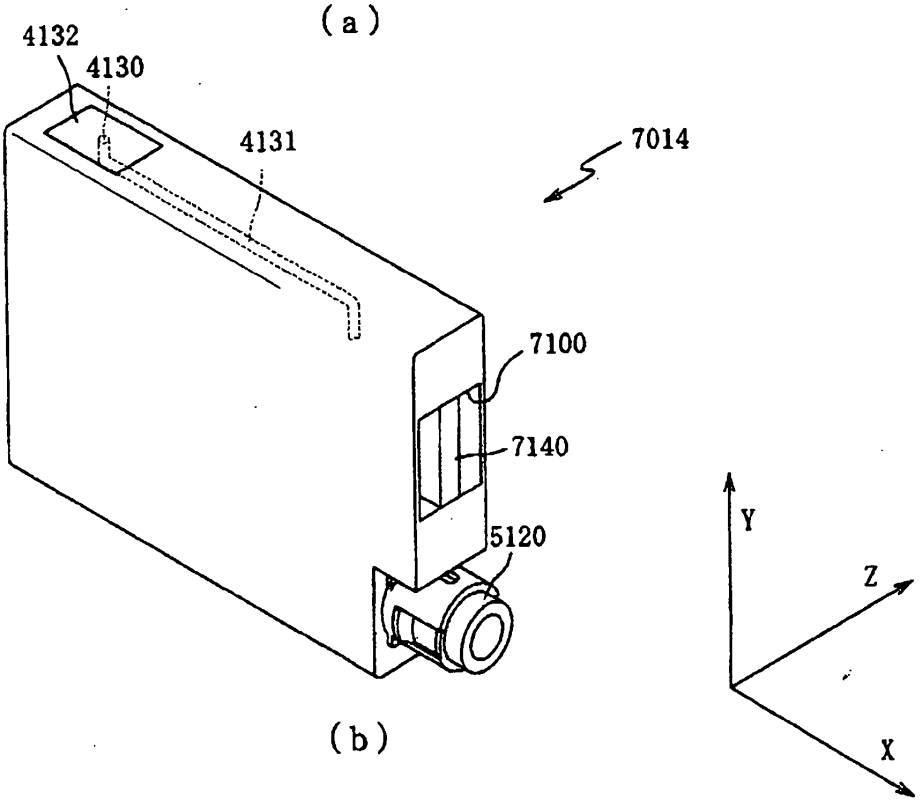
4132
4130
4131
7014
7100
7140
5120
Y
Z
X

(b)

Fig.60

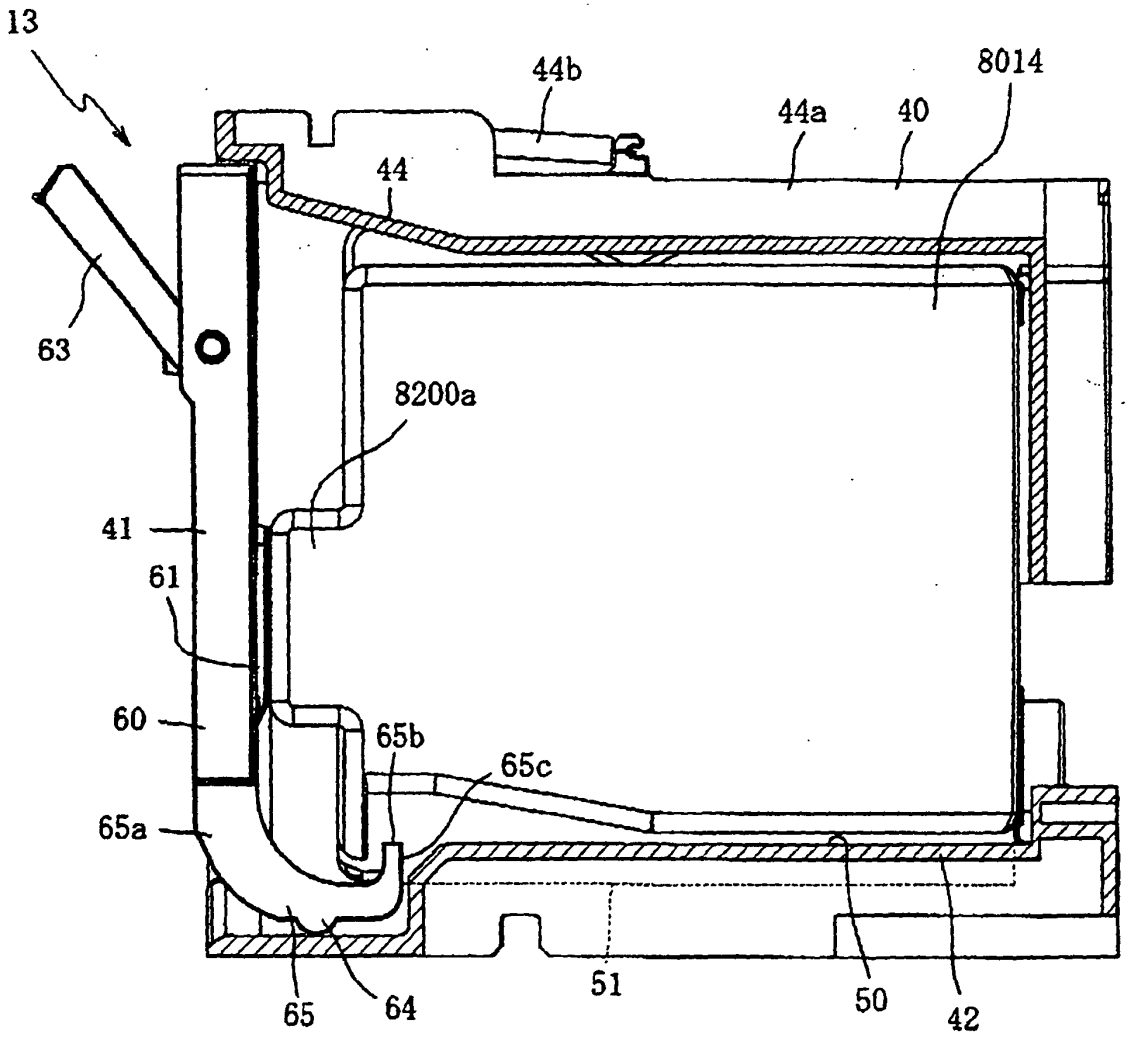

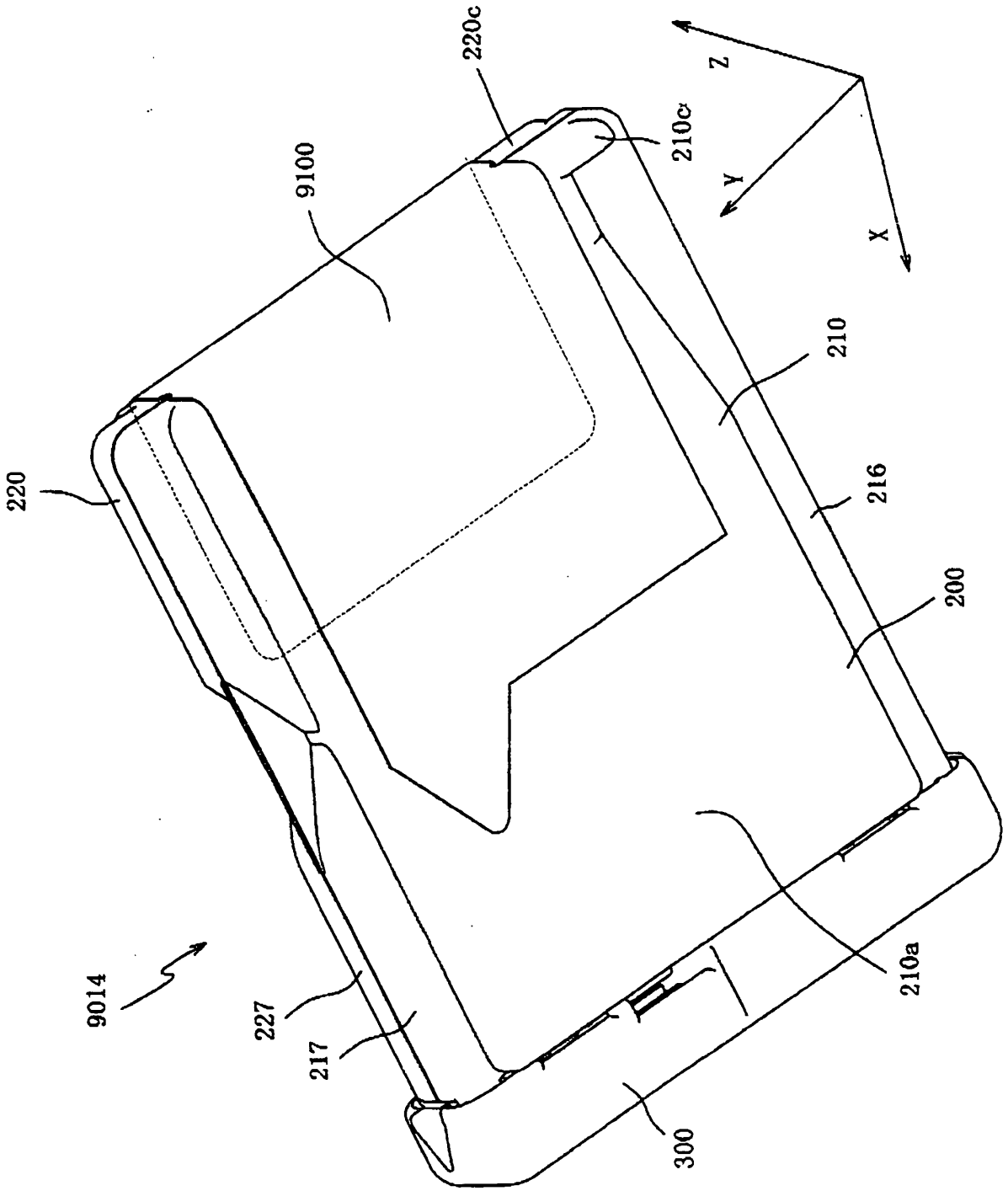

Fig.61

Fig.62

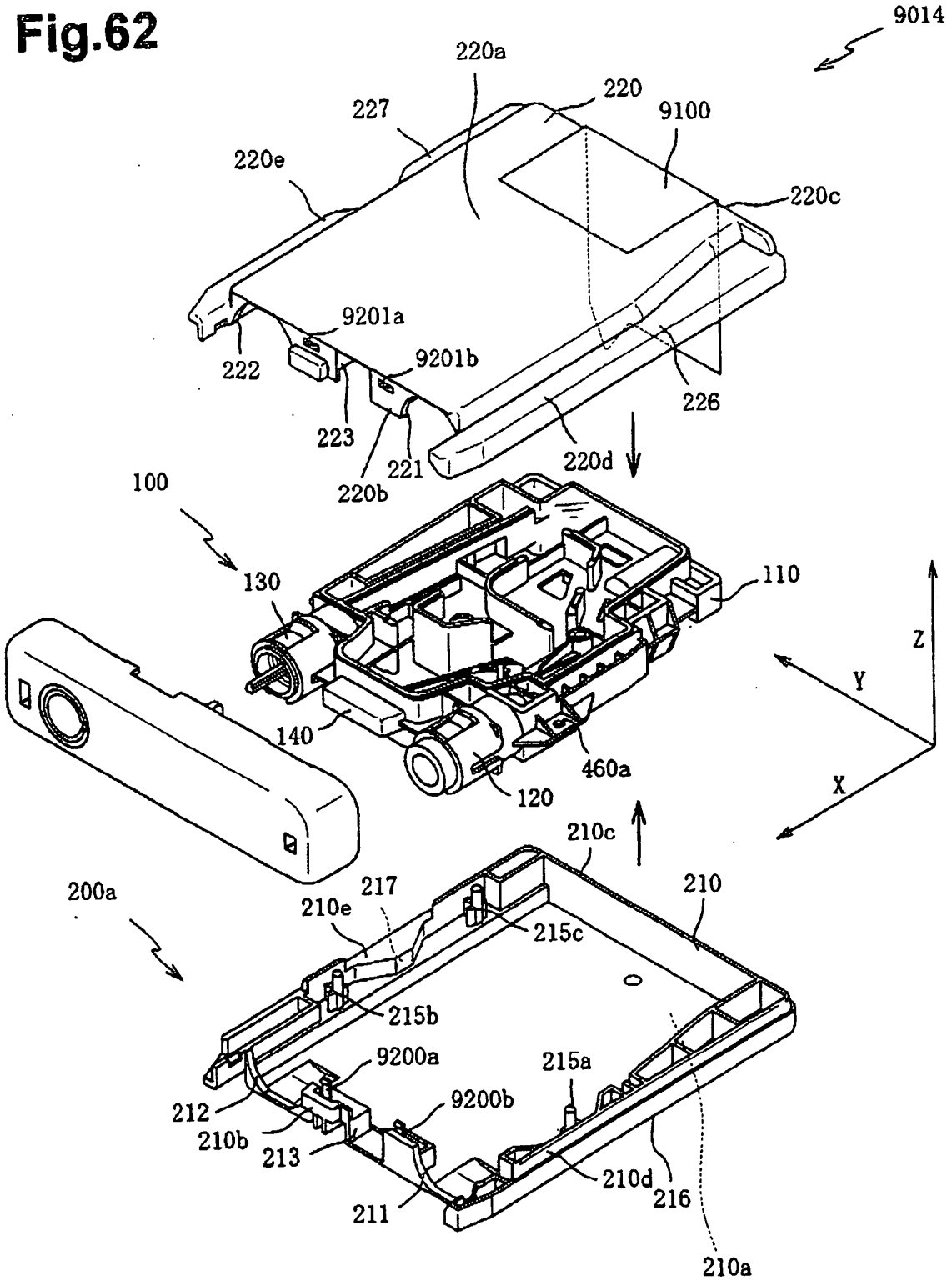
9014
220a
220
227
9100
220e
220c
9201a
222
9201b
226
223
221
220d
220b
100
130
110
Z
Y
140
460a
X
120
210c
200a
217
210
210e
215c
215b
9200a
215a
212
9200b
210b
213
210d
216
211
210a

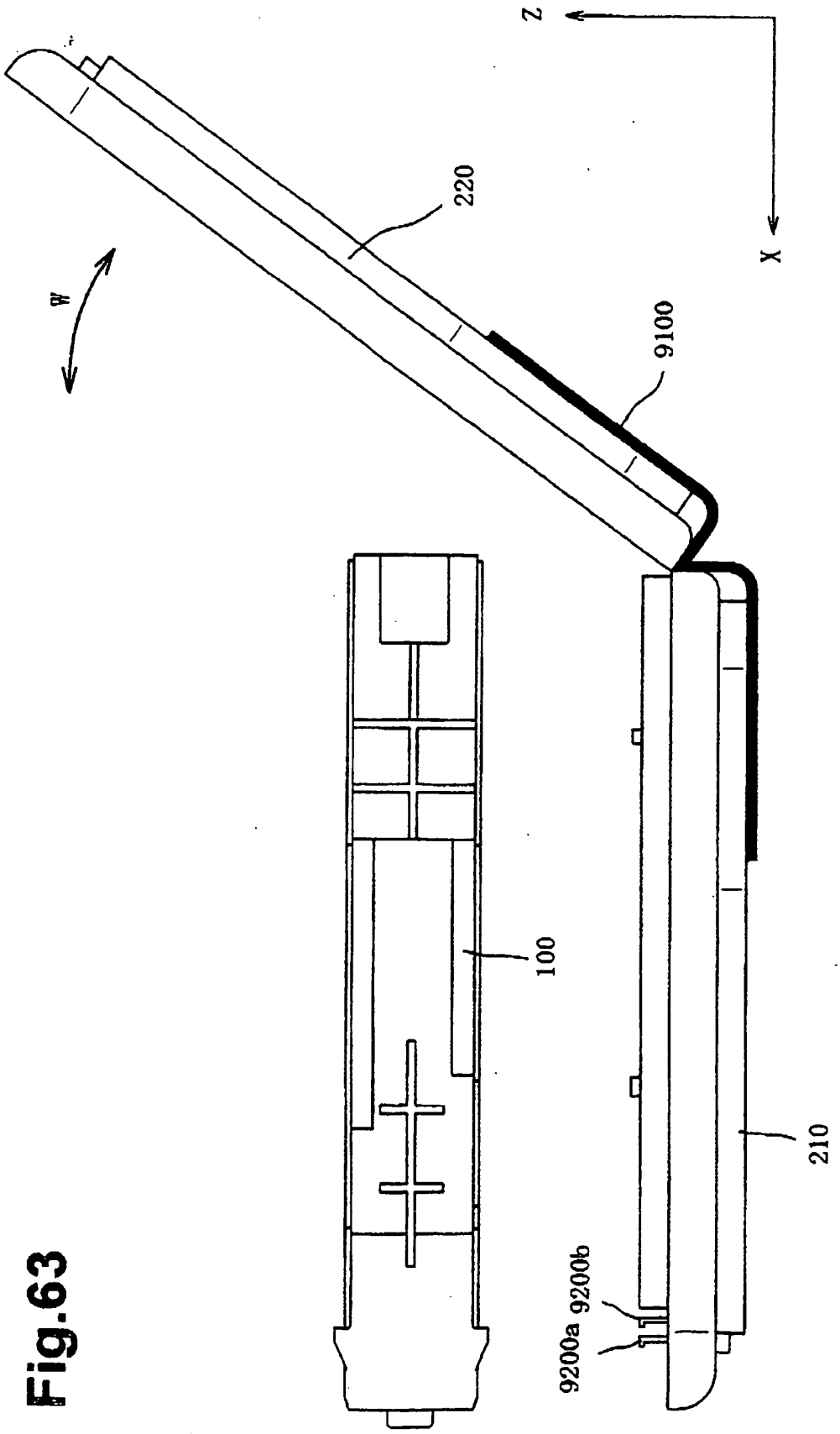

Fig.63

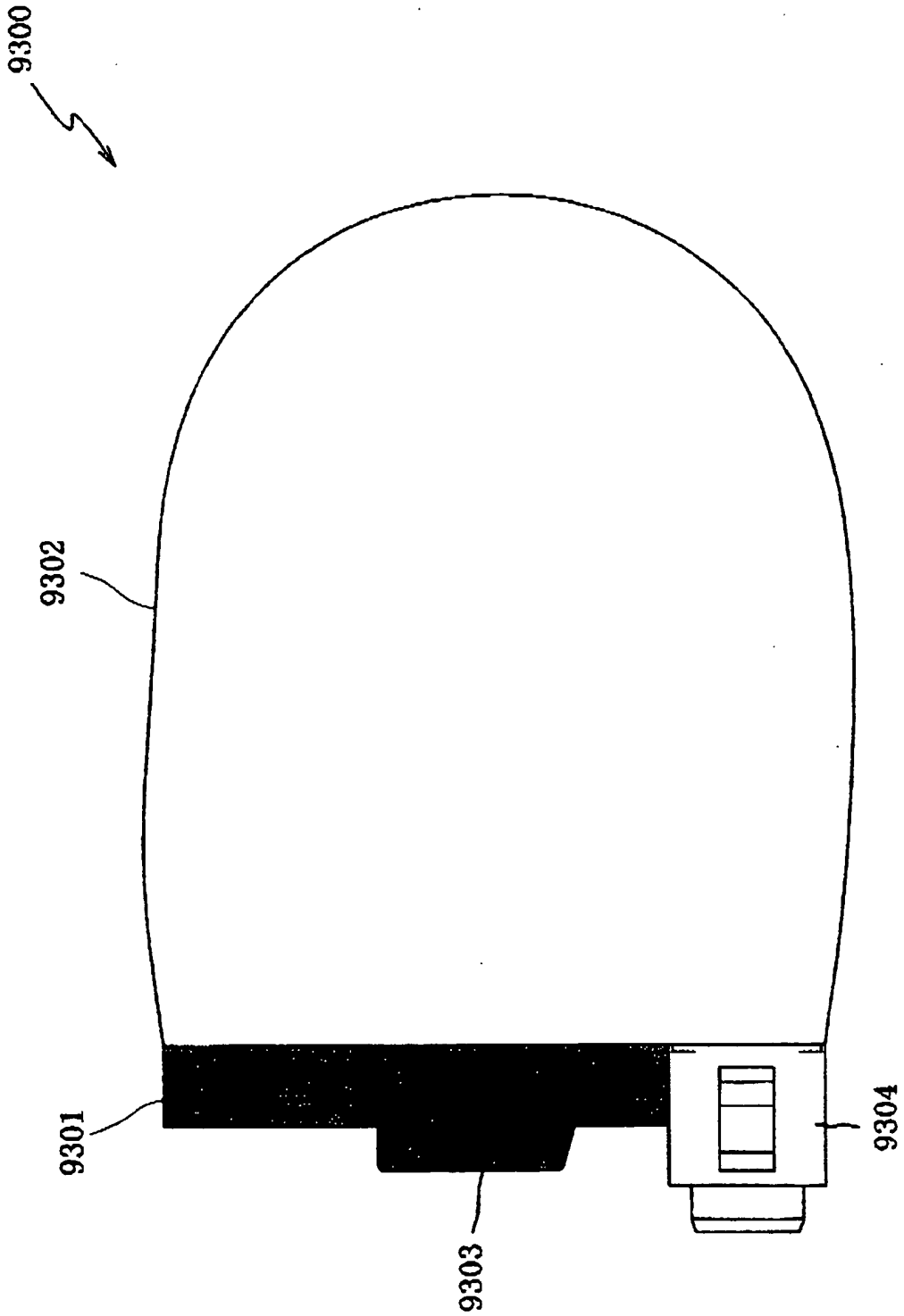

Fig.64

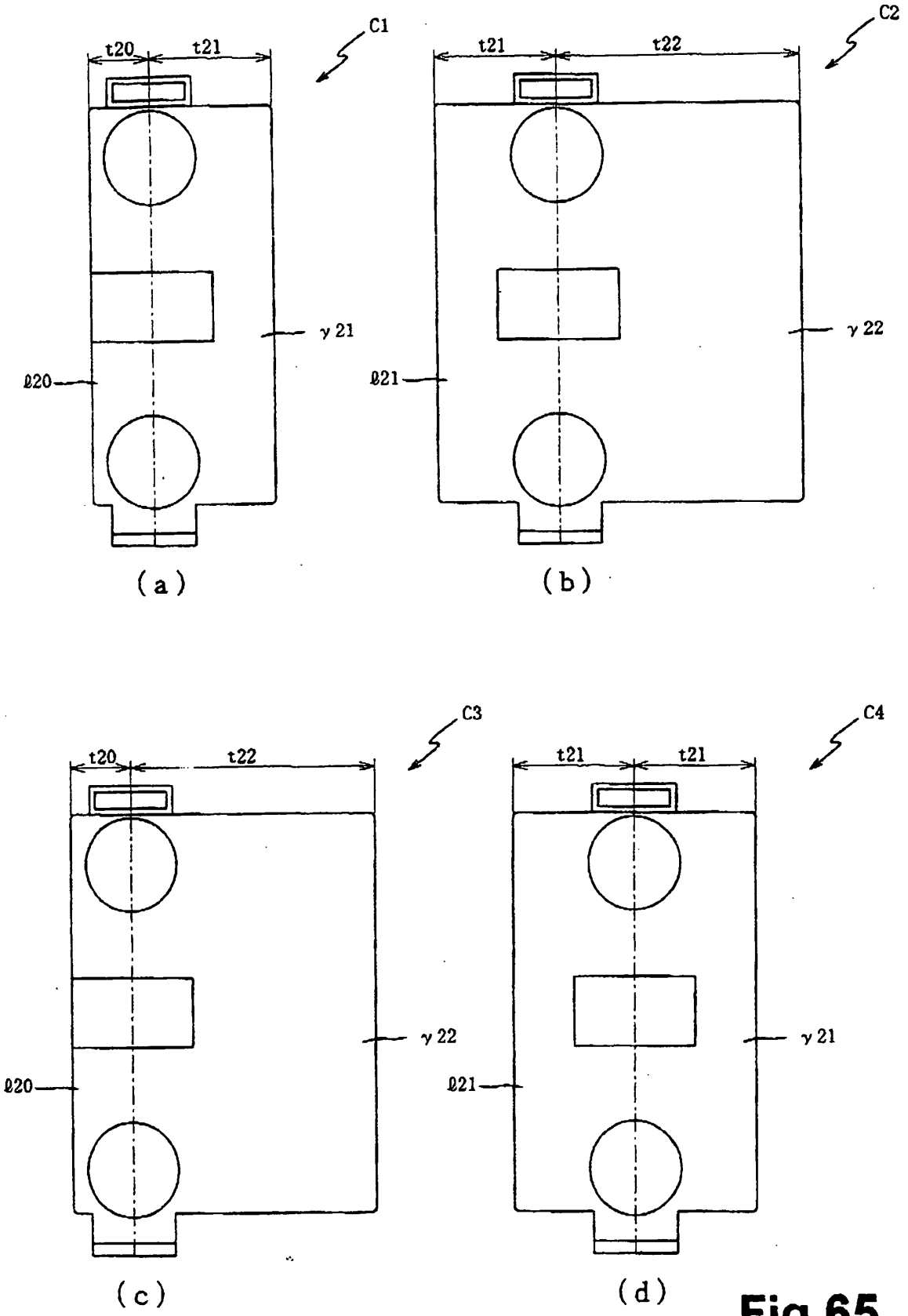
C1
t20
t21
γ21
ℓ20
(a)
C2
t21
t22
γ22
ℓ21
(b)
C3
t20
t22
γ22
ℓ20
(c)
C4
t21
t21
γ21
ℓ21
(d)

Fig.65

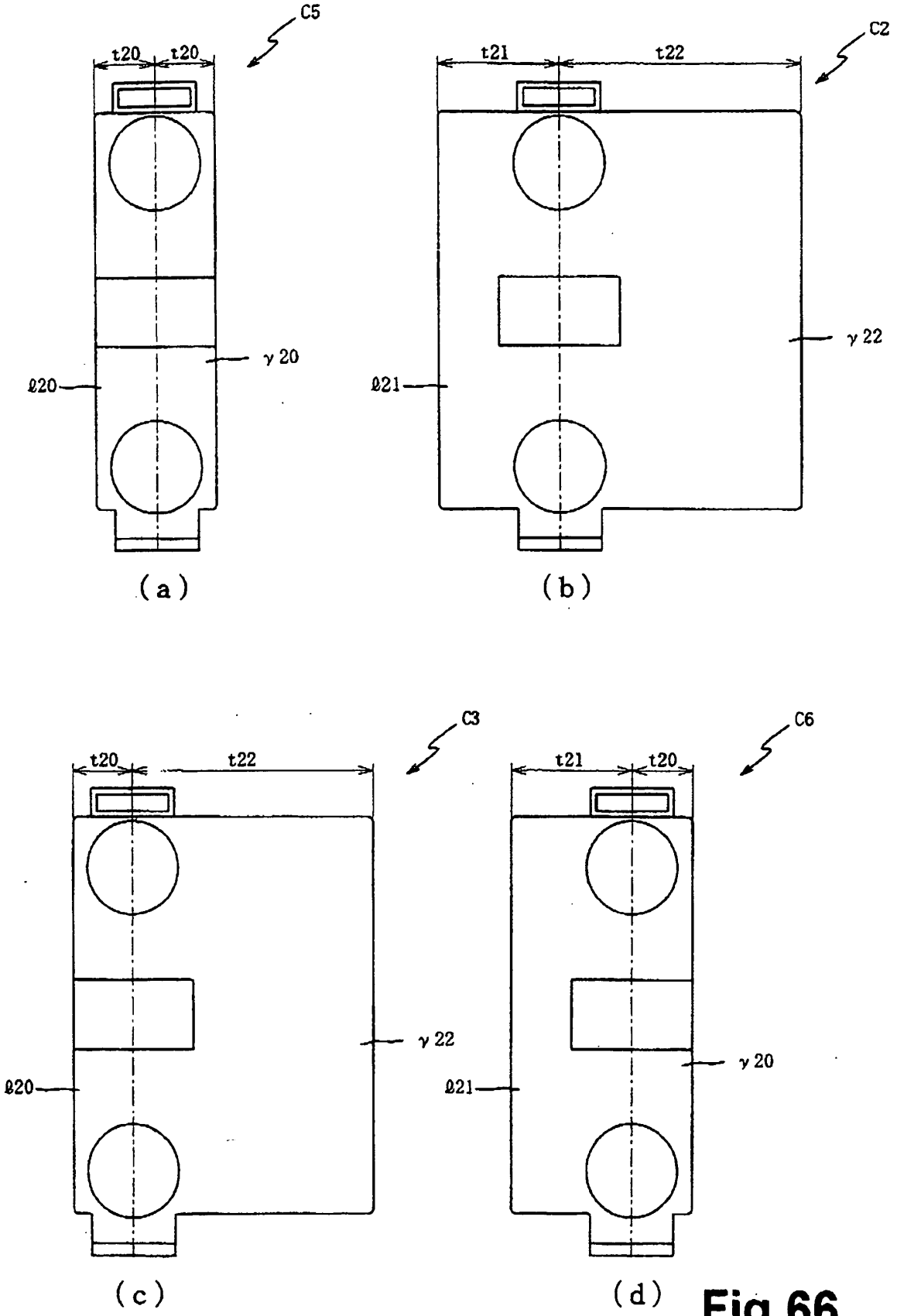
C5
t20
t20
γ 20
ℓ20
(a)
C2
t21
t22
γ 22
ℓ21
(b)
C3
t20
t22
γ 22
ℓ20
(c)
C6
t21
t20
γ 20
ℓ21
(d)

Fig.66

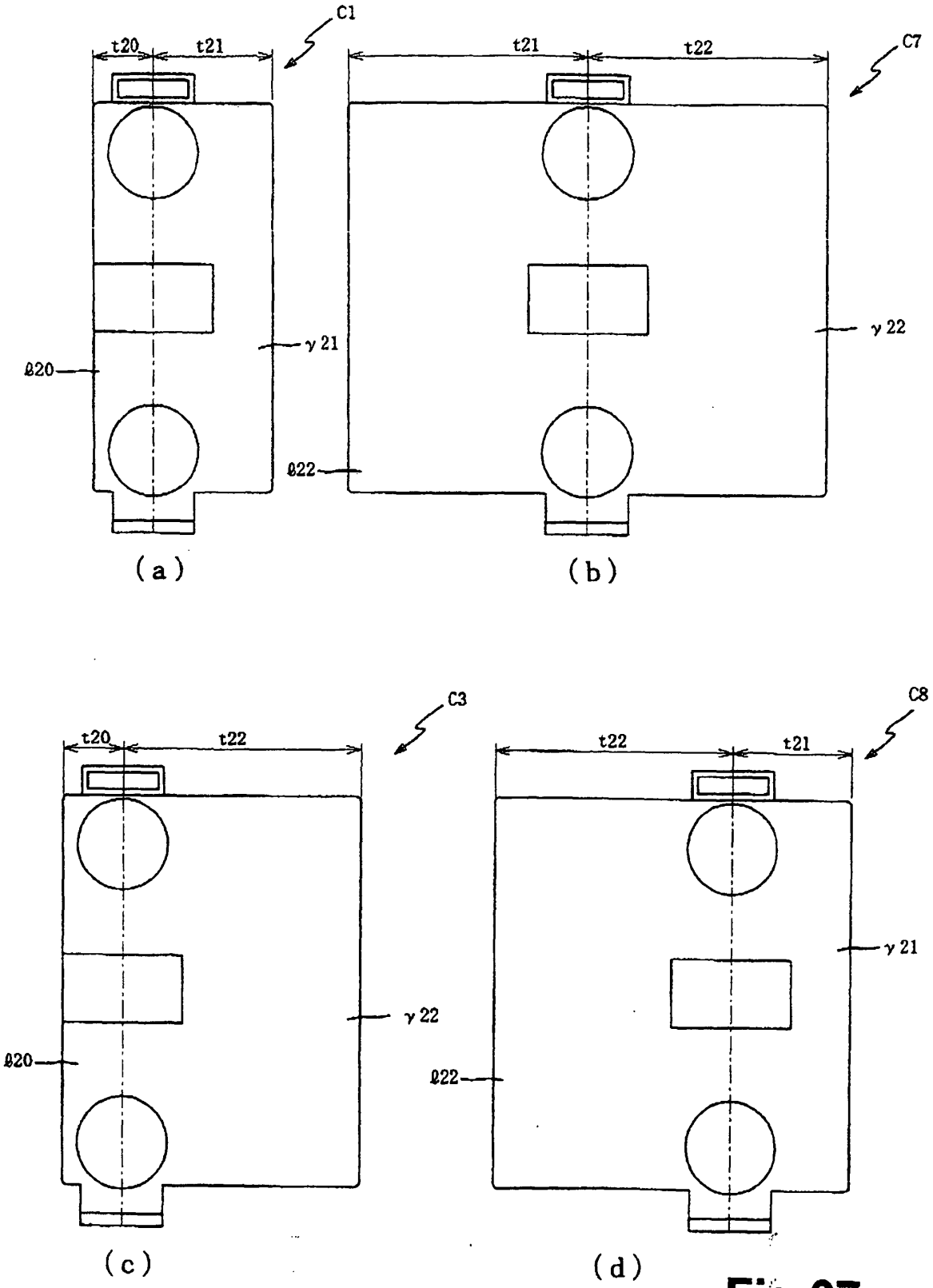
C1
t20
t21
γ21
ℓ20
(a)
C7
t21
t22
γ22
ℓ22
(b)
C3
t20
t22
γ22
ℓ20
(c)
C8
t22
t21
γ21
ℓ22
(d)

Fig.67

REFERENCES CITED IN THE DESCRIPTION

This list of references cited by the applicant is for the reader's convenience only. It does not form part of the European patent document. Even though great care has been taken in compiling the references, errors or omissions cannot be excluded and the EPO disclaims all liability in this regard.

Patent documents cited in the description

- EP 0478244 A2 **[0002]**
- JP 2005238815 A **[0003]**
- US 6074042 A **[0008]**