(19) Europäisches Patentamt
European Patent Office
Office européen des brevets

(11) **EP 1 851 065 B1**

(12) **EUROPEAN PATENT SPECIFICATION**

(45) Date of publication and mention of the grant of the patent:
11.02.2015 Bulletin 2015/07

(21) Application number: **06700726.0**

(22) Date of filing: **18.01.2006**

(51) Int Cl.:
B42D 3/04 *(2006.01)*

(86) International application number:
PCT/IE2006/000003

(87) International publication number:
WO 2006/077564 (27.07.2006 Gazette 2006/30)

(54) **A BOOK PROTECTIVE COVER AND METHOD**

BUCHSCHUTZUMSCHLAG UND -VERFAHREN

COUVERTURE ET PROCEDE DE PROTECTION DE LIVRE

(84) Designated Contracting States:
AT BE BG CH CY CZ DE DK EE ES FI FR GB GR HU IE IS IT LI LT LU LV MC NL PL PT RO SE SI SK TR

(30) Priority: **19.01.2005 IE 20050016**
22.03.2005 IE 20050152

(43) Date of publication of application:
07.11.2007 Bulletin 2007/45

(73) Proprietor: **Fitzgerald, Sean Kevin**
Carrigrohane, County Cork (IE)

(72) Inventor: **Fitzgerald, Sean Kevin**
Carrigrohane, County Cork (IE)

(74) Representative: **Weldon, Michael James et al**
John A. O'Brien & Associates
Third Floor,
Duncairn House,
14 Carysfort Avenue
Blackrock, Co. Dublin (IE)

(56) References cited:
WO-A-00/37262
WO-A-2004/110778
CA-A1- 2 250 508
DE-A1- 10 060 064
FR-A- 2 801 837
GB-A- 2 219 249

Note: Within nine months of the publication of the mention of the grant of the European patent in the European Patent Bulletin, any person may give notice to the European Patent Office of opposition to that patent, in accordance with the Implementing Regulations. Notice of opposition shall not be deemed to have been filed until the opposition fee has been paid. (Art. 99(1) European Patent Convention).

EP 1 851 065 B1

Printed by Jouve, 75001 PARIS (FR)

Description

Field of the Invention

[0001] The invention relates to protective covers for books.

[0002] My Irish patent no. 61667 describes a book protective cover product having an elongate web of (typically transparent) material and adhesive strips along the side edges. It is effective for covering books of a variety of sizes.

[0003] The present invention is directed towards improving upon this protective cover to achieve greater versatility and/or ease of use.

SUMMARY OF THE INVENTION

[0004] According to the invention there is provided a book protective cover apparatus as claimed in claim 1.

[0005] In a further embodiment, the internal adhesive is of aqueous acrylic composition.

[0006] In one embodiment, at least one of the edge and internal adhesives has a peel-off liner with a measurement scale marked on it.

[0007] In one embodiment, the apparatus comprises a transverse adhesive strip extending substantially between the side edges.

[0008] In one embodiment, the apparatus further comprises a scissors for cutting the web, the scissors having blades cranked upwardly from adjacent to the pivot joint.

[0009] In one embodiment, the apparatus further comprises a cutting device comprising a rail and a blade for cutting across the web as it slides on the rail. In one embodiment, the blade is on a wheel. In one embodiment, vertical level of the blade is adjustable. In one embodiment, the cutting device comprises a base having alignment indicia marked on it. In another aspect, the invention provides a method of covering a book using any apparatus defined above, the method comprising the steps of:

placing the book on the cover material with the internal adhesive being exposed and the book and the material being at a desired mutual orientation;

pressing the book and the material together sufficiently for the material to grip onto the book at the internal adhesive to retain the book and the material at the desired orientation; and

completing flaps to provide a protective cover.

[0010] In one embodiment, the book top and bottom edges are substantially parallel to the material side edges, and the internal adhesive maintains this mutual position during the remainder of the method.

[0011] In an alternative embodiment, the book is placed across the cover material with its top and bottom edges perpendicular to the cover material side edges, and the side edges of the material are folded over to overlie part of the inside surfaces of the book's covers so that a protective cover in the form of a dust jacket is formed.

[0012] In one embodiment, the book is placed so that the book spine is directly on the internal adhesive.

[0013] In one embodiment, the web is cut to a length equalling the height of the book.

[0014] In one embodiment, the method comprises the further step of peeling the cover material from the book and re-aligning the book with the cover material and re-pressing the cover material against the book to adjust the position.

DETAILED DESCRIPTION OF THE INVENTION

Brief Description of the Drawings

[0015] The invention will be more clearly understood from the following description of some embodiments thereof, given by way of example only with reference to the accompanying drawings in which:-

Fig. 1 is a perspective view and Fig. 2 is an end view of a book protective cover product of the invention;

Figs. 3 is an end view showing an internal adhesive strip in more detail;

Fig. 4 is a perspective view showing cutting of a length of material for covering a book;

Fig. 5 is a perspective view of a cutting apparatus, and Figs. 6, 7, and 8 are perspective views showing the apparatus in use;

Figs. 9 and 10 are perspective views showing how a protective cover is applied in one method;

Fig. 11 is a perspective view showing application of a cover in another method;

Figs. 12(a), 12(b), and 12(c) are perspective views showing use of the product for forming a dust jacket for a book;

Figs. 13(a), 13(b), and 13(c) are perspective views showing an alternative method of forming a dust jacket; and

Figs. 14 to 16 are plan views of alternative book protective cover products which do not form a part of the invention.

[0016] Referring to Figs. 1 to 3 a book protective cover product 1 comprises a roll of transparent plastics web cover material 2 having an adhesive strip 3 along each side edge. There is also an internal, central, adhesive

strip 4. Each adhesive strip 3 has a length of permanent adhesive 6 and a release liner 5. The adhesive 6 comprises a polyester tissue carrier coated on both sides with permanent adhesive of synthetic rubber composition and with a peel strength in the range of 300 N/m to 3000 N/m, in this embodiment 1200N/m. The adhesive may alternatively be of acrylic, and the carrier may alternatively be polyproplene.

[0017] The central strip 4 has adhesive 8 of the releasable, peel-off, type used widely for removable adhesive notes. There is a release liner 5 on the adhesive 8. This adhesive is clear, and it is UV-resistant. The adhesive 8 comprises aqueous acrylic with a peel strength of 200 N/m, although the full range of possible strengths is 25 N/m to 300N/m. This adhesive is transparent so that it does not block visibility of the book when a protective cover is in place.

[0018] There is a measurement scale 7 marked on the peel-off release liners 5. The release liners 5 are of siliconed release liner paper or film.

[0019] Referring to Figs. 4 to 11 a scissors 20 may be used to cut off an appropriate length of material 2, using guidance from the measurement scale 7. In this embodiment a scissors 20 has blades 21 and 22 which extend upwardly from the pivot axis so that the lower blade 21 easily fits under the material 2. Also, a rounded end profile of the lower blade helps to ensure that the underneath surface is not scratched.

[0020] Alternatively, a cutting apparatus 30 may be used to cut off a length of material 2. This comprises a base 31 and end pillars 32 supporting a rail 33 on which runs a carriage 34 having a cutting wheel 35. As shown in Fig. 6 the material 2 is trained between the base 31 and the rail 33, and alignment marks 36 allow one to easily ensure that the device 30 is square. The exact length to cut off can be accurately and easily determined by placing a book on the material 2 and viewing the measurement scale 7 to ensure that there is sufficient at each end.

[0021] As shown in Fig. 7 the cutting wheel 35 maybe used initially to cut the peel-off liner 5 of the central strip 4, which is then peeled off. It is then used to cut the material 2 as shown in Fig. 8. Figs. 9 and 10 show how cuts are made to provide top flaps 40, bottom flaps 41, and side flaps 42. When these flaps have been formed the cover is then completed by folding them over and adhering the flaps in place. Of course, a scissors may be used instead of the device 30.

[0022] An important aspect is that the protective cover is easily applied because of assistance arising from the fact that the internal adhesive 8 adheres to the outside surfaces of the book covers. By simply pressing the material 2 against the book outer surface the desired mutual positions and orientations of the book and the cover material 2 may be retained. This helps to prevent skewing of the book and therefore helps to speed up the covering task. This is very advantageous as it avoids the need for use of pegs or weights to ensure that the book remains square on the material. It is only necessary for the user to shape the cover after putting the book on the exposed internal adhesive 8. The internal adhesive 8 maintains the book and cover in position and square. Thus both quality and speed of covering are improved.

[0023] Fig. 11 shows a method in which top and bottom flaps 50 have outer edges 51 aligned with the edges of the book covers.

[0024] Another aspect of the product 1 is that it may also be easily alternatively used to cover books with a protective cover of the dust jacket type. Referring to Figs. 12(a), 12(b), and 12(c), a portion 55 of material 2 is cut either with a scissors or the device 30. The length of the portion 55 exactly matches that of the book B to be covered, as easily gauged using the measurement scale 7. The book B is then placed on the material 2 at right angles to the manner described above and with the spine of the book B directly over the (exposed) central strip of adhesive 8. The peel-off liners 5 of the edge strips 6 are then peeled away and the side edges are folded over to form flaps 60 held in place by the adhesive 6 of the side strips 3. Application of a protective liner of the dust jacket type is particularly simple because the internal adhesive 8 helps to maintain the book spine in alignment, parallel to the material 2 side edges.

[0025] Alternatively, as shown in Figs. 13(a) to 13(c) if the material 2 is not cut to the exact length, flaps can be cut afterwards with a scissors. In this case excess flaps 70 and 71 at one end are cut and folded over. There may, of course, be flaps both top and bottom.

[0026] It will be appreciated from the above that the product 1 allows covering of a book with greater accuracy and ease of use arising from the internal adhesive 8, and alternatively covering with a dust jacket if desired. The end user can choose on a book-by-book basis which type of protective cover to make. Also, the cutting apparatus 30 allows very easy and accurate cutting of the material 2 and separate cutting of the peel-off liners 5 if desired.

[0027] Referring to Figs. 14 to 16 products may be provided in sheet form, each sheet being for one book. A sheet 80 has longitudinal edge strips 81 with permanent adhesive; and a central strip 82 and transverse end strips 83 with peelable adhesive. A sheet 100 shown in Fig. 15 has longitudinal edge strips 101 with permanent adhesive; and transverse edge strips 102 and a transverse central strip 103 with peelable adhesive. A sheet 110 shown in Fig. 16 has longitudinal edge strips 111 with permanent adhesive and a single, central, transverse strip 112 with peelable adhesive.

[0028] The invention is not limited to the embodiments described but may be varied in construction and detail. For example, in the method for forming a cover, the cuts may be made so that the edge adhesive only contacts film material and there is no adhesive contact with the book itself. This is achieved by providing sufficient excess film on the sides so that the folded-in flap covers most of the inside surfaces of the covers. With this method the cover may be removed from the book while keeping the

cover intact, if desired. For possible removal of the cover the strength of the adhesive on the internal strip needs to be sufficient to assist with forming the cover by adhering to the book, but also weak enough to allow removal of the cover from the book, and adjustment of mutual positions during the covering method.

[0029] Also, in a variation of the method the book may lie across the web, the width of the web being sufficient to encompass the full width of the book and an excess for the side flaps. Similar cutting and folding steps are then implemented, as for the situation where the book lies as illustrated in Fig. 6.

[0030] Further, different adhesive compositions and peel strengths may be used within the scope of the invention. For example, the adhesive of the edge strips may be of the peelable type or of the perm-peel type. If they are peelable, there is excellent versatility for removing dust jackets, which would be particularly convenient for children. In another example, the edge strip adhesive may be of aqueous acrylic composition, or either the internal adhesive or the edge adhesive may be of solvent acrylic composition Also, any of the adhesive strips may be interrupted, consisting of a series of short strips. The web material may be of any desired gauge/thickness to suit the intended use. The liners for the adhesives may not be silicone-coated, and may instead comprise a film of plastics or plastics composite material without a coating. The liner overhang for finger lift may be on one or both sides. Also, the cover material may be of any desired type, including paper.

Claims

1. A book protective cover apparatus comprising:

cover material (2);
edge adhesive (3) adjacent each side edge of the material; and
internal adhesive between the side edges of the web;
the cover material is in the form of a web in a roll;
the width of the web is sufficient to provide a dust jacket of a book opened transversely across the web;
at least some of the internal adhesive (4) is centrally located between the side edges; and
the internal adhesive (4) is transparent,
characterised in that,
the internal adhesive (4) is of the peelable type, and has a peel strength is in the range of 25 N/m to 300 N/m,
the internal adhesive (4) is in the form of a longitudinal strip parallel to the side edges.

2. An apparatus as claimed in claim 1, wherein the internal adhesive is of aqueous acrylic composition.

3. An apparatus as claimed in any preceding claim, wherein at least one of the edge and internal adhesives has a peel-off liner (5) with a measurement scale marked on it.

4. An apparatus as claimed in any preceding claim, comprising a transverse adhesive strip extending substantially between the side edges.

5. An apparatus as claimed in any preceding claim, further comprising a scissors (20) for cutting the web, the scissors having blades cranked upwardly from adjacent to the pivot joint.

6. An apparatus as claimed in any preceding claim, further comprising a cutting device (30) comprising a rail and a blade for cutting across the web as it slides on the rail.

7. An apparatus as claimed in claim 6, wherein the blade is on a wheel (35).

8. An apparatus as claimed in claims 6 or 7, wherein vertical level of the blade is adjustable.

9. An apparatus as claimed in any of claims 6 to 8, wherein the cutting device comprises a base (31) having alignment indicia (36) marked on it.

10. A method of covering a book using an apparatus of any of claims 1 to 9, the method comprising the steps of:

placing the book (B) on the cover material (2) with the internal adhesive (4) being exposed and the book and the material being at a desired mutual orientation;
pressing the book and the material together sufficiently for the material to grip onto the book at the internal adhesive to retain the book and the material at the desired orientation; and
completing flaps to provide a protective cover.

11. A method of covering a book as claimed in claim 10, wherein the book (B) top and bottom edges are substantially parallel to the material (2) side edges, and the internal adhesive maintains this mutual position during the remainder of the method.

12. A method of covering a book as claimed in claim 10, wherein the book (B) is placed across the cover material (2) with its top and bottom edges perpendicular to the cover material side edges, and the side edges of the material are folded over to overlie part of the inside surfaces of the book's covers so that a protective cover in the form of a dust jacket is formed.

13. A method of covering a book as claimed in claim 12,

wherein the book is placed so that the book spine is directly on the internal adhesive.

14. A method of covering a book as claimed in claims 12 or 13, wherein the web is cut to a length equalling the height of the book.

15. A method as claimed in any of claims 10 to 14, the method comprises the further step of peeling the cover material from the book and re-aligning the book with the cover material and re-pressing the cover material against the book to adjust the position.

Patentansprüche

1. Schützende Buchumhüllungsvorrichtung, die Folgendes umfasst:

Umhüllungsmaterial (2);
Randklebstoff (3) benachbart jedem Seitenrand des Materials; und
innen liegenden Klebstoff zwischen den Seitenrändern der Bahn;
wobei das Umhüllungsmaterial die Form einer Bahn in einer Rolle aufweist;
wobei die Breite der Bahn ausreicht, um einen Schutzumschlag eines quer über die Bahn geöffneten Buchs bereitzustellen;
wobei sich mindestens ein Teil des innen liegenden Klebstoffs (4) mittig zwischen den Seitenrändern befindet; und
wobei der innen liegende Klebstoff (4) transparent ist,
dadurch gekennzeichnet, dass
der innen liegende Klebstoff (4) der abziehbaren Art ist und eine Abziehfestigkeit im Bereich von 25 N/m bis 300 N/m aufweist,
der innen liegende Klebstoff (4) die Form eines Längsstreifens parallel zu den Seitenrändern aufweist.

2. Vorrichtung nach Anspruch 1, wobei der innen liegende Klebstoff aus einer wässrigen Acrylzusammensetzung ist.

3. Vorrichtung nach einem der vorangehenden Ansprüche, wobei der Randklebstoff und/oder der innen liegende Klebstoff eine Abzieh-Decklage (5) mit einer darauf markierten Messskala aufweist.

4. Vorrichtung nach einem der vorangehenden Ansprüche, umfassend einen Klebstoff-Querstreifen, der sich im Wesentlichen zwischen den Seitenrändern erstreckt.

5. Vorrichtung nach einem der vorangehenden Ansprüche, weiter umfassend eine Schere (20) zum Schneiden der Bahn, wobei die Schere Messer aufweist, die von benachbart dem Drehgelenk nach oben gekröpft sind.

6. Vorrichtung nach einem der vorangehenden Ansprüche, weiter umfassend ein Schneidgerät (30), umfassend eine Schiene und ein Messer zum Schneiden über die Bahn, wenn es auf der Schiene gleitet.

7. Vorrichtung nach Anspruch 6, wobei sich das Messer auf einer Rolle (35) befindet.

8. Vorrichtung nach Anspruch 6 oder 7, wobei die vertikale Höhe des Messers verstellbar ist.

9. Vorrichtung nach einem der Ansprüche 6 bis 8, wobei die Schneidvorrichtung eine Grundplatte (31) mit darauf markierten Ausrichtungszeichen (36) umfasst.

10. Verfahren zum Umhüllen eines Buchs unter Verwendung einer Vorrichtung nach einem der Ansprüche 1 bis 9, wobei das Verfahren folgende Schritte umfasst:

Platzieren des Buchs (B) auf das Umhüllungsmaterial (2), wobei der innen liegende Klebstoff (4) freigelegt ist und sich das Buch und das Material in einer gewünschten gegenseitigen Orientierung befinden;
ausreichendes Zusammendrücken des Buchs und des Materials, damit das Material an dem innen liegenden Klebstoff an dem Buch greift, um das Buch und das Material in der gewünschten Orientierung zu halten; und
Fertigstellen von Laschen, um eine Schutzumhüllung bereitzustellen.

11. Verfahren zum Umhüllen eines Buchs nach Anspruch 10, wobei der obere und der untere Rand des Buchs (B) im Wesentlichen parallel zu den Seitenrändern des Materials (2) sind und der innen liegende Klebstoff diese gegenseitige Lage während des Rests des Verfahrens aufrechterhält.

12. Verfahren zum Umhüllen eines Buchs nach Anspruch 10, wobei das Buch (B) mit seinem oberen und seinem unteren Rand rechtwinklig zu den Seitenrändern des Umhüllungsmaterials auf das Umhüllungsmaterial (2) platziert wird und die Seitenränder des Materials umgefaltet werden, um auf einem Teil der inneren Oberflächen der Buchdeckel zu liegen, so dass eine schützende Umhüllung in Form eines Schutzumschlags gebildet wird.

13. Verfahren zum Umhüllen eines Buchs nach Anspruch 12, wobei das Buch derart platziert wird, dass

sich der Buchrücken direkt auf dem innen liegenden Klebstoff befindet.

14. Verfahren zum Umhüllen eines Buchs nach Anspruch 12 oder 13, wobei die Bahn auf eine Länge geschnitten wird, die gleich der Höhe des Buchs ist.

15. Verfahren nach einem der Ansprüche 10 bis 14, wobei das Verfahren den weiteren Schritt des Abziehens des Umhüllungsmaterials von dem Buch und des erneuten Ausrichtens des Buchs mit dem Umhüllungsmaterial und das erneute Drücken des Umhüllungsmaterials an das Buch umfasst, um die Lage anzupassen.

Revendications

1. Appareil pour une couverture de protection d'un livre, comprenant :

une matière de recouvrement (2) ;
un adhésif de bord (3) adjacent à chaque bord latéral de la matière ; et
un adhésif interne entre les bords latéraux de la bande continue ;
la matière de recouvrement se présentant sous la forme d'une bande continue en rouleau ;
la largeur de la bande continue étant suffisante pour procurer une jaquette d'un livre lequel est ouvert de façon transversale en travers de la bande continue ;
une certaine partie au moins de l'adhésif interne (4) étant positionnée de façon centrale entre les bords latéraux ; et
l'adhésif interne (4) étant transparent,
caractérisé en ce que
l'adhésif interne (4) est du type détachable, et possède une résistance de pelage dans la gamme de 25 N/m à 300 N/m,
l'adhésif interne (4) se présente sous la forme d'un ruban longitudinal qui est parallèle aux bords latéraux.

2. Appareil selon la revendication 1, l'adhésif interne étant une composition acrylique aqueuse.

3. Appareil selon l'une quelconque des revendications précédentes, au moins l'un des éléments suivants, à savoir l'adhésif de bord et l'adhésif interne, ayant une doublure à détacher par pelage (5) laquelle est marquée d'une échelle de mesure.

4. Appareil selon l'une quelconque des revendications précédentes, comprenant une bande adhésive transversale laquelle s'étend sensiblement entre les bords latéraux.

5. Appareil selon l'une quelconque des revendications précédentes, comprenant en outre des ciseaux (20) pour couper la bande continue, les ciseaux possédant des lames coudées vers le haut à partir d'une position adjacente au raccord à pivot.

6. Appareil selon l'une quelconque des revendications précédentes, comprenant en outre un dispositif de coupe (30) lequel comporte un rail et une lame pour effectuer une coupe en travers de la bande continue au fur et à mesure qu'il glisse sur le rail.

7. Appareil selon la revendication 6, la lame se trouvant sur une roue (35).

8. Appareil selon les revendications 6 ou 7, le niveau vertical de la lame étant réglable.

9. Appareil selon l'une quelconque des revendications 6 à 8, le dispositif de coupe comportant un socle (31) sur lequel sont marqués des repères d'alignement (36).

10. Procédé pour couvrir un livre grâce à l'utilisation d'un appareil selon l'une quelconque des revendications 1 à 9, le procédé comprenant les étapes consistant à :

placer le livre (B) sur la matière de recouvrement (2), alors que l'adhésif interne (4) est exposé, et que le livre et la matière se trouvent à une orientation mutuelle désirée ;
amener par pression le livre et la matière l'un vers l'autre de façon suffisante pour que la matière puisse s'agripper au livre au niveau de l'adhésif interne afin de retenir le livre et la matière suivant l'orientation désirée ; et
terminer les rabats afin de procurer une couverture de protection.

11. Procédé pour couvrir un livre selon la revendication 10, les bords supérieur et inférieur du livre (B) étant sensiblement parallèles aux bords latéraux de la matière (2), et l'adhésif interne conservant cette position mutuelle pendant le restant du procédé.

12. Procédé pour couvrir un livre selon la revendication 10, le livre (B) étant placé en travers de la matière de recouvrement (2), alors que ses bord supérieur et inférieur sont perpendiculaires aux bords latéraux de la matière de recouvrement, et les bords latéraux de la matière étant repliés afin de se superposer à une partie des surfaces intérieures des couvertures du livre de sorte qu'une couverture de protection, sous la forme d'une jaquette, est formée.

13. Procédé pour couvrir un livre selon la revendication 12, le livre étant placé de sorte que le dos du livre

se trouve directement sur l'adhésif interne.

14. Procédé pour couvrir un livre selon les revendications 12 ou 13, la bande continue étant coupée à une longueur qui est égale à la hauteur du livre.

15. Procédé selon l'une quelconque des revendications 10 à 14, le procédé comprenant l'étape supplémentaire consistant à peler la matière de recouvrement à partir du livre et à réaligner le livre avec la matière de recouvrement et à presser de nouveau la matière de recouvrement contre le livre afin d'ajuster la position.

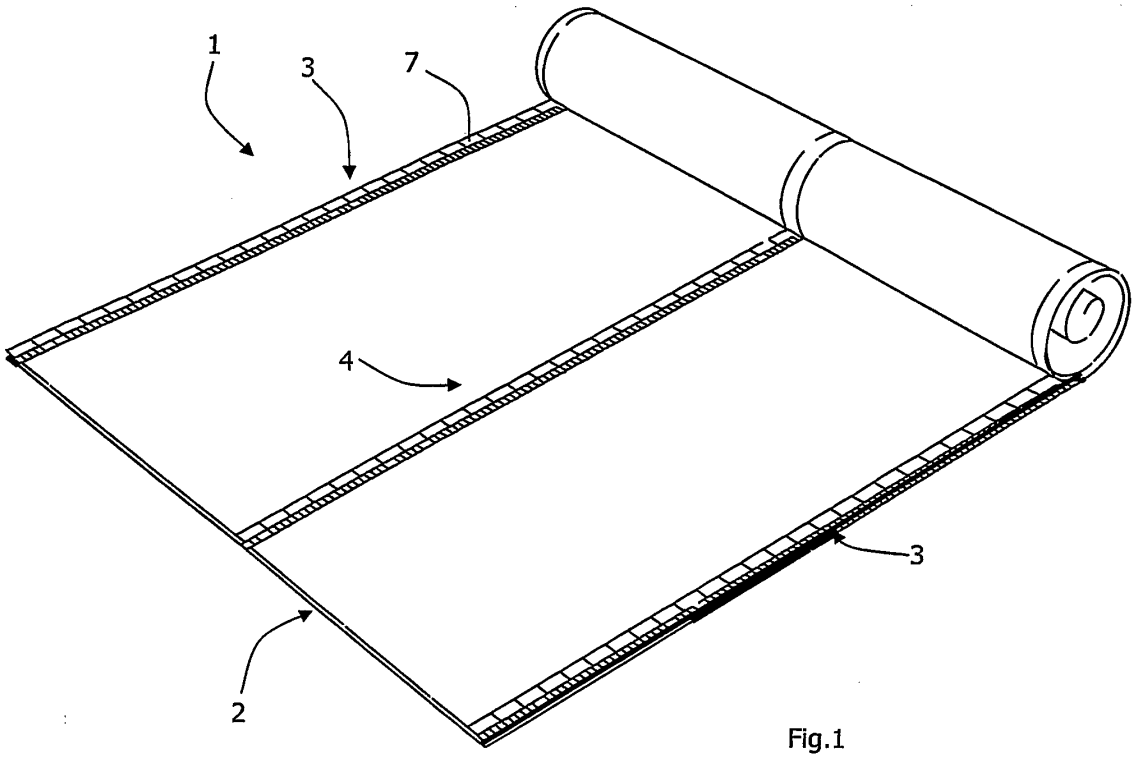

Fig.1

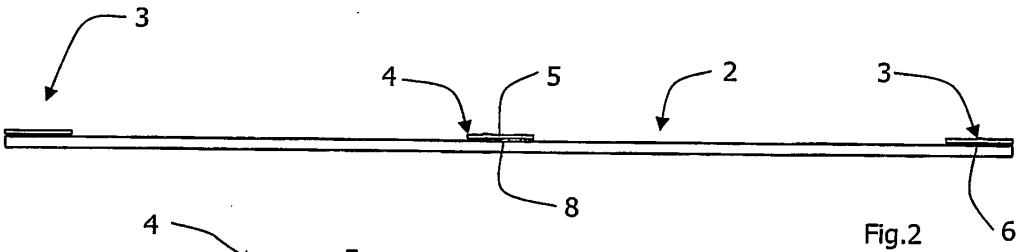

Fig.2

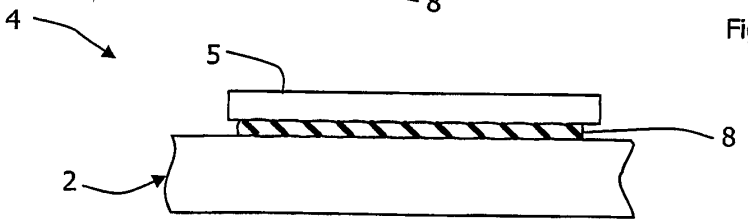

Fig.3

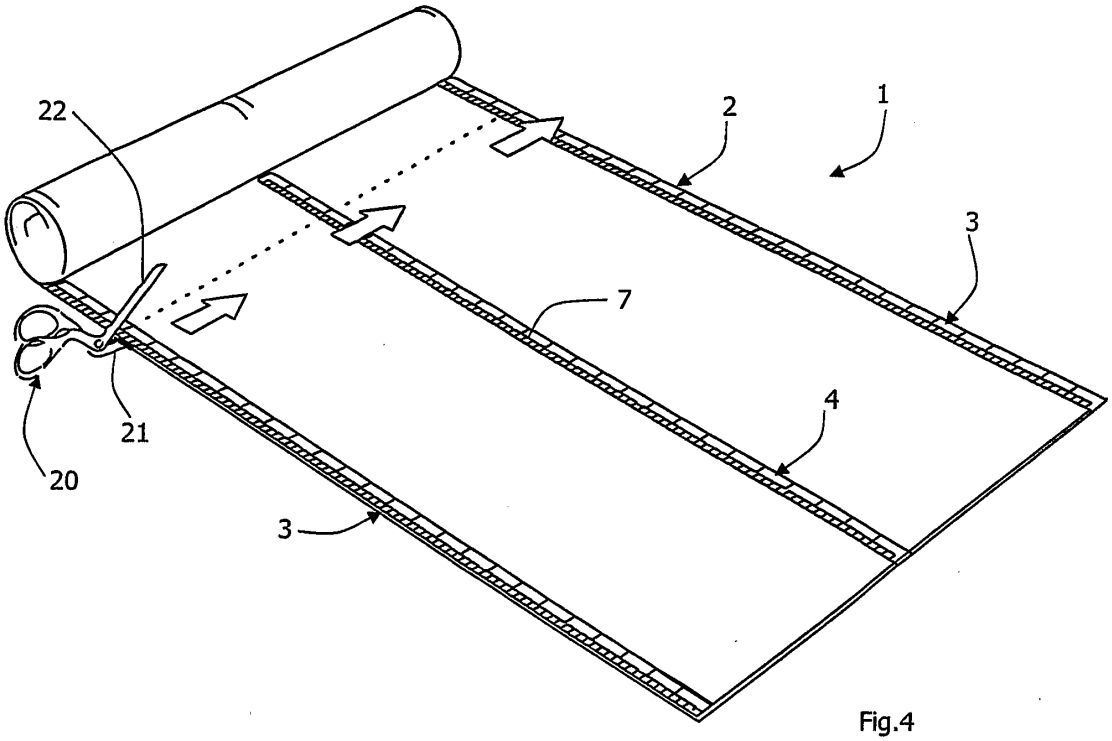

Fig.4

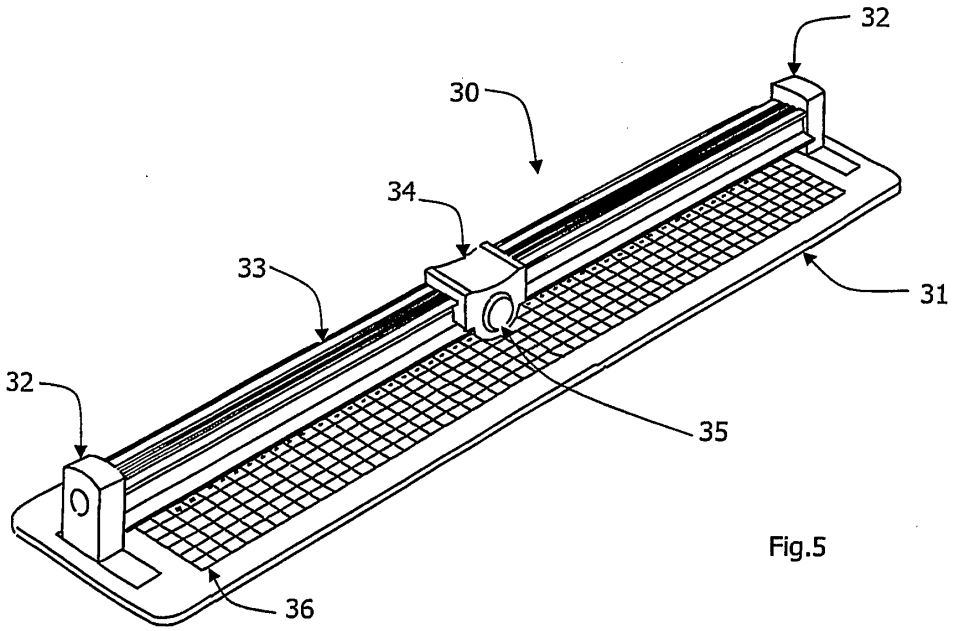

Fig.5

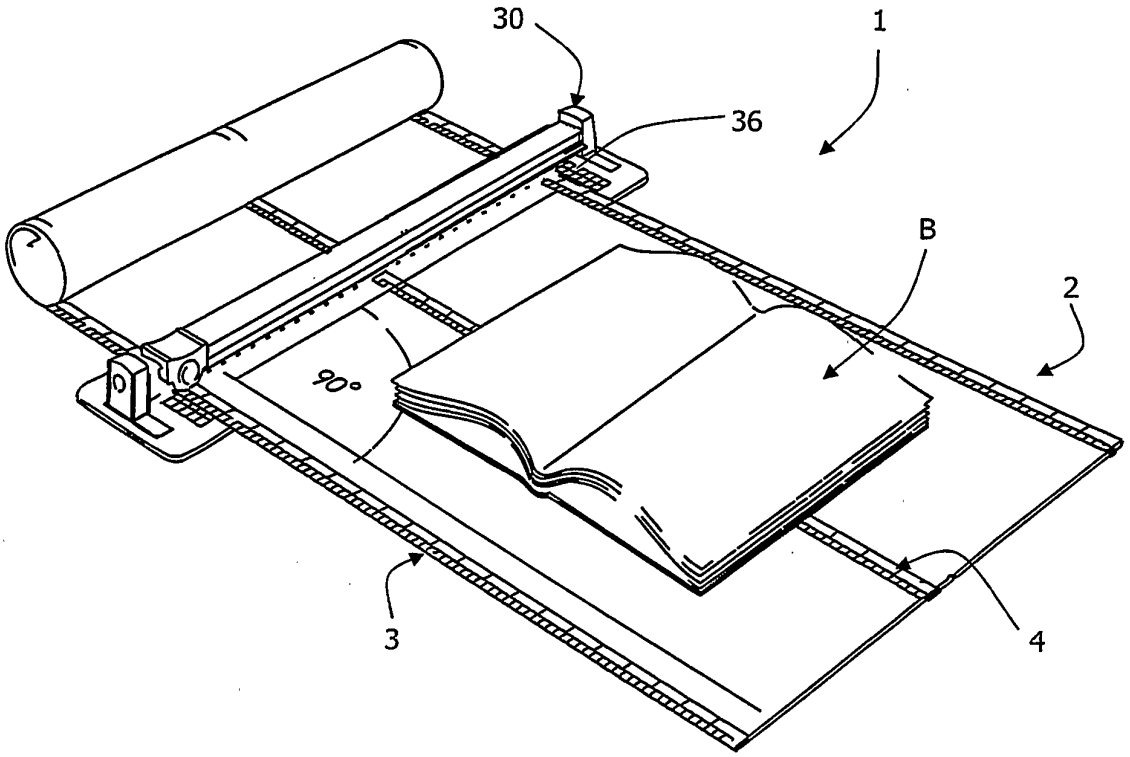

Fig.6

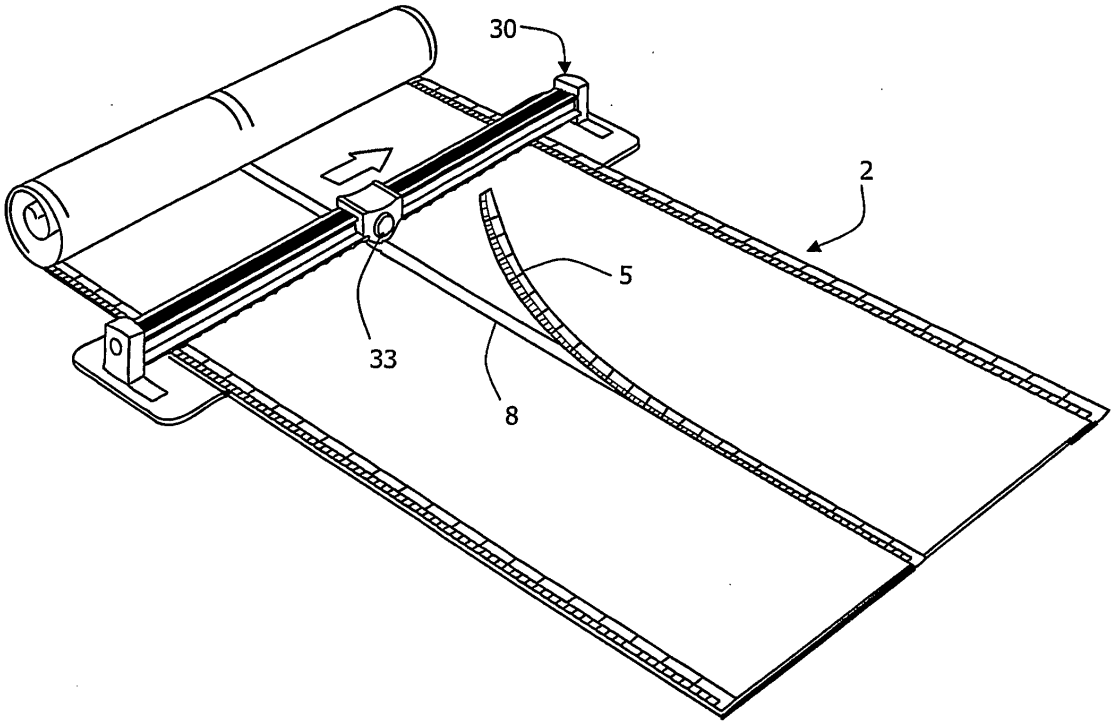

Fig.7

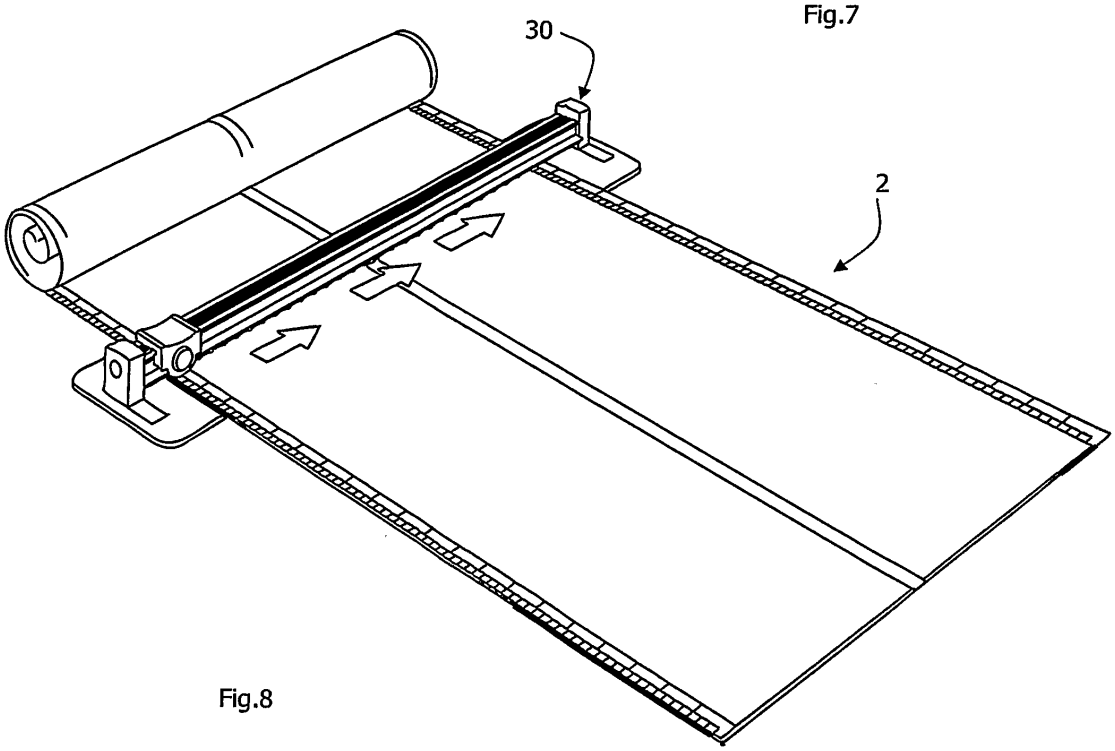

Fig.8

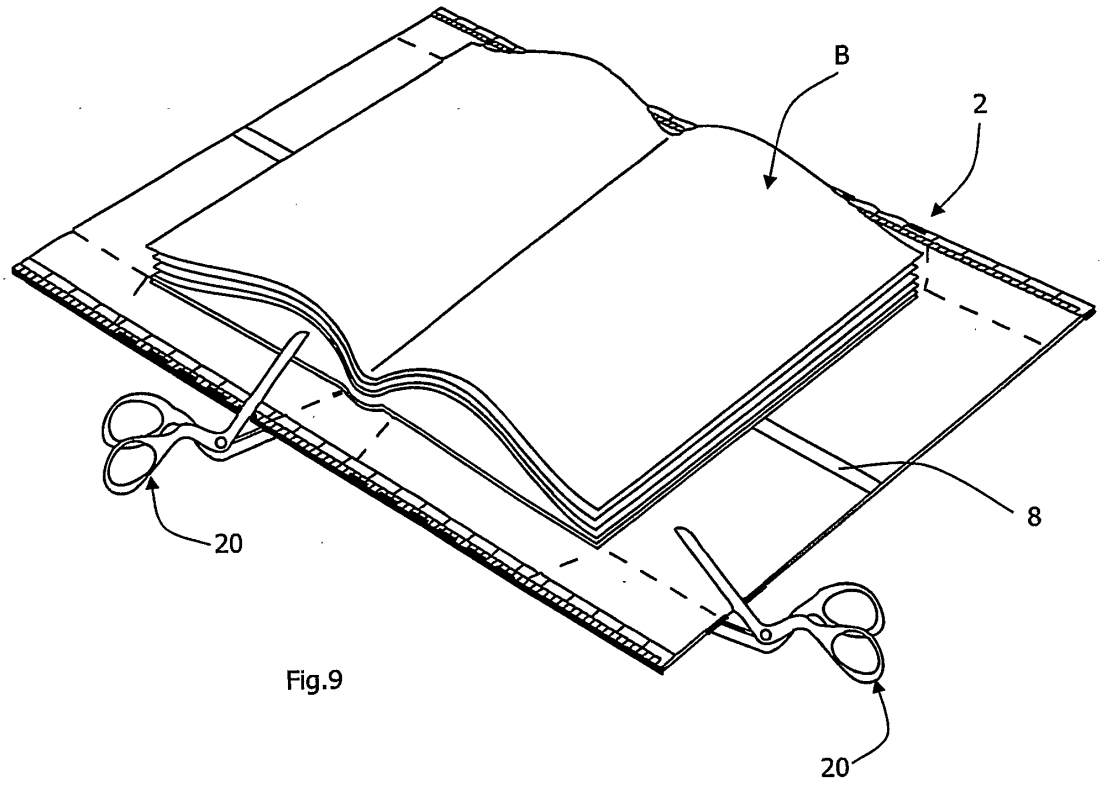

Fig.9

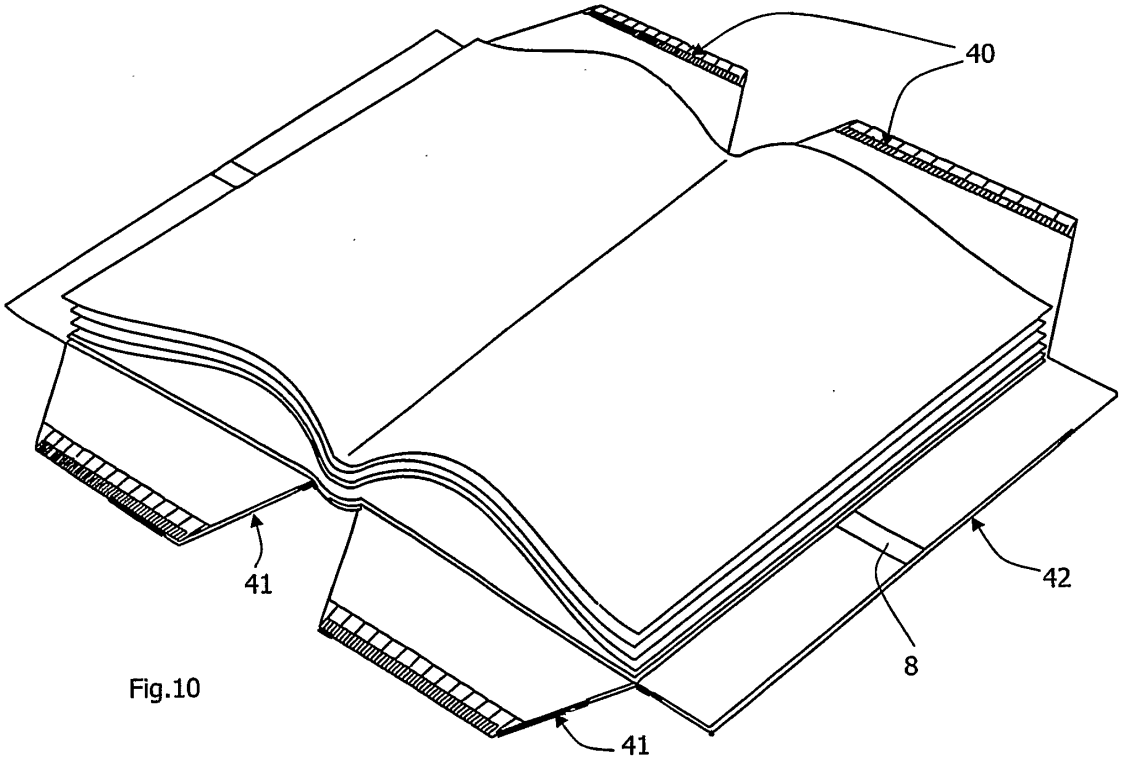

Fig.10

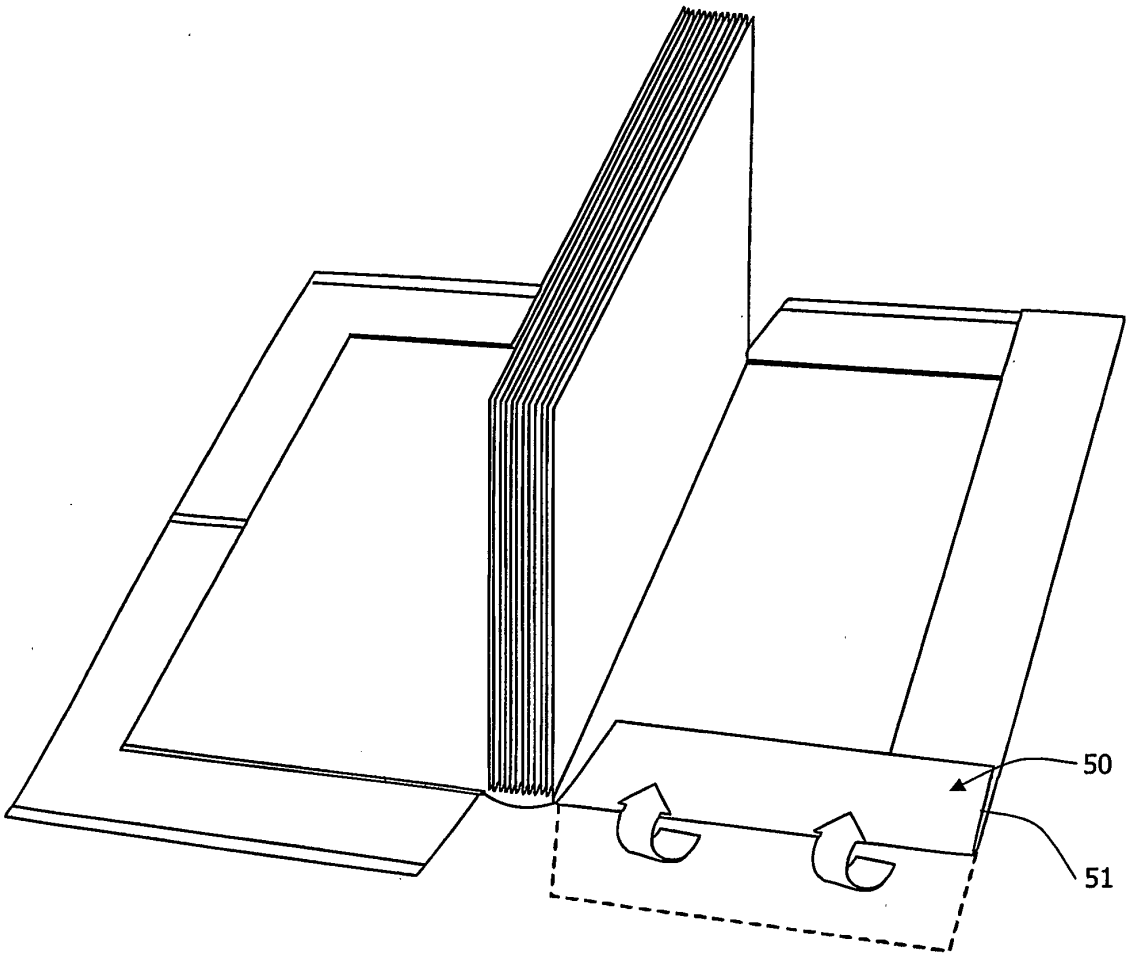

Fig.11

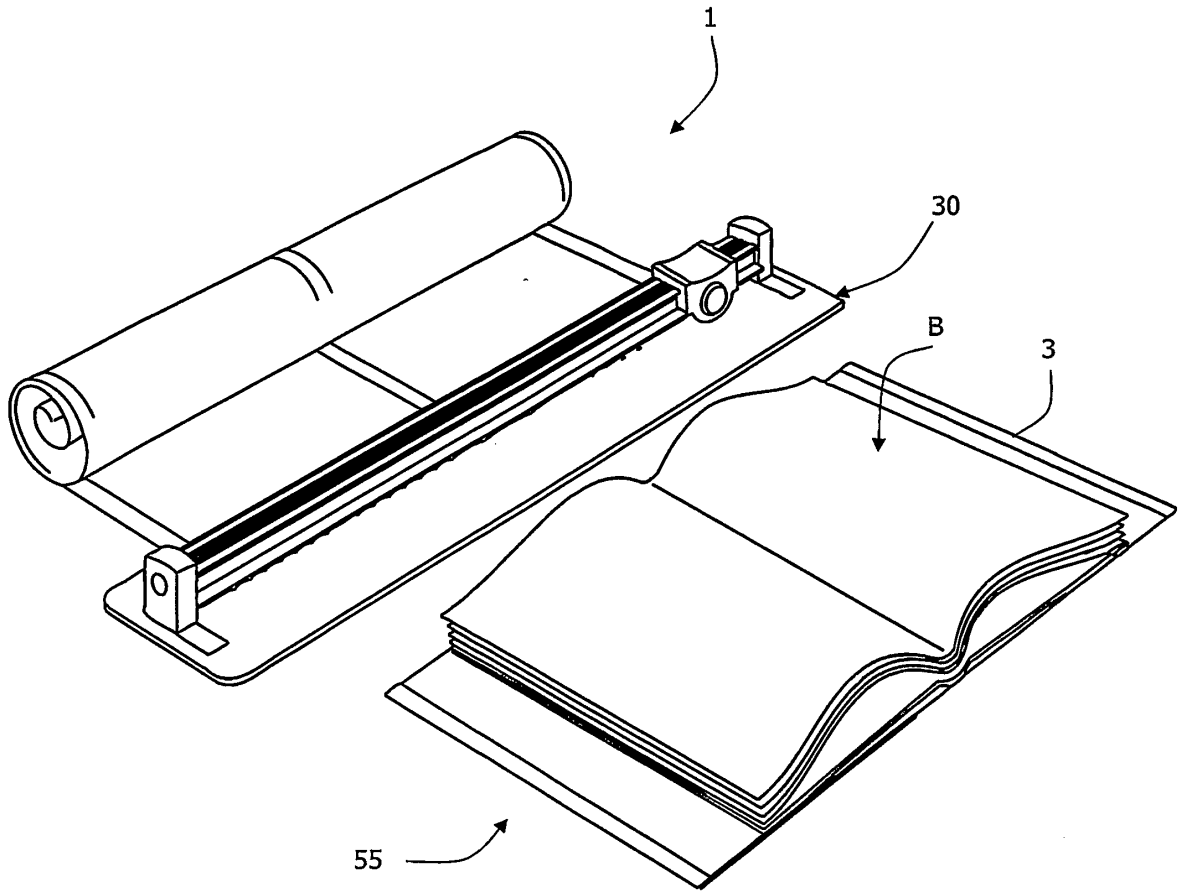

Fig.12(a)

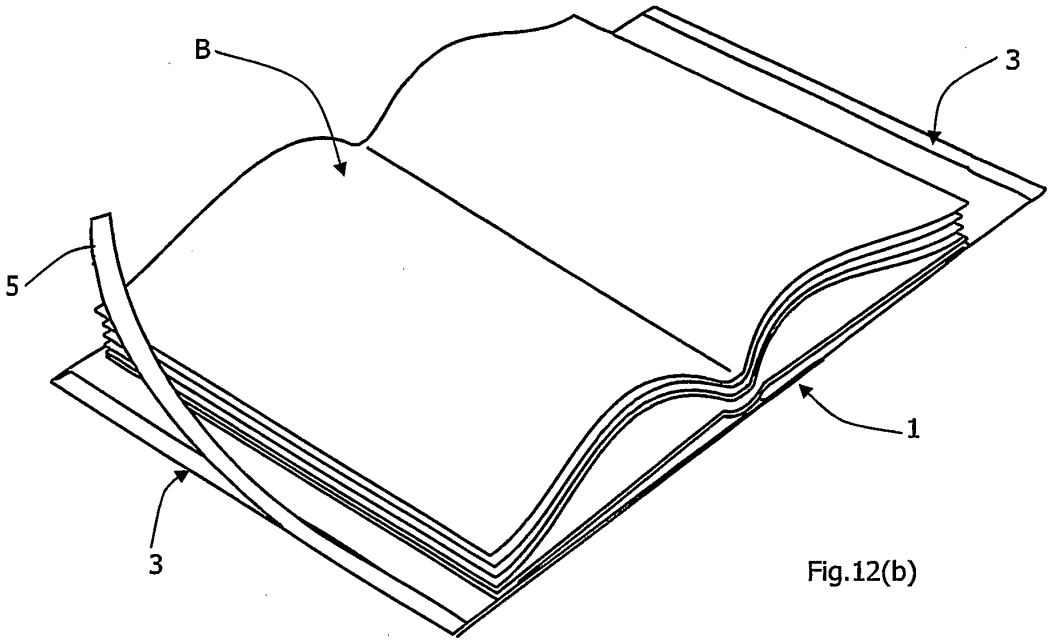

Fig.12(b)

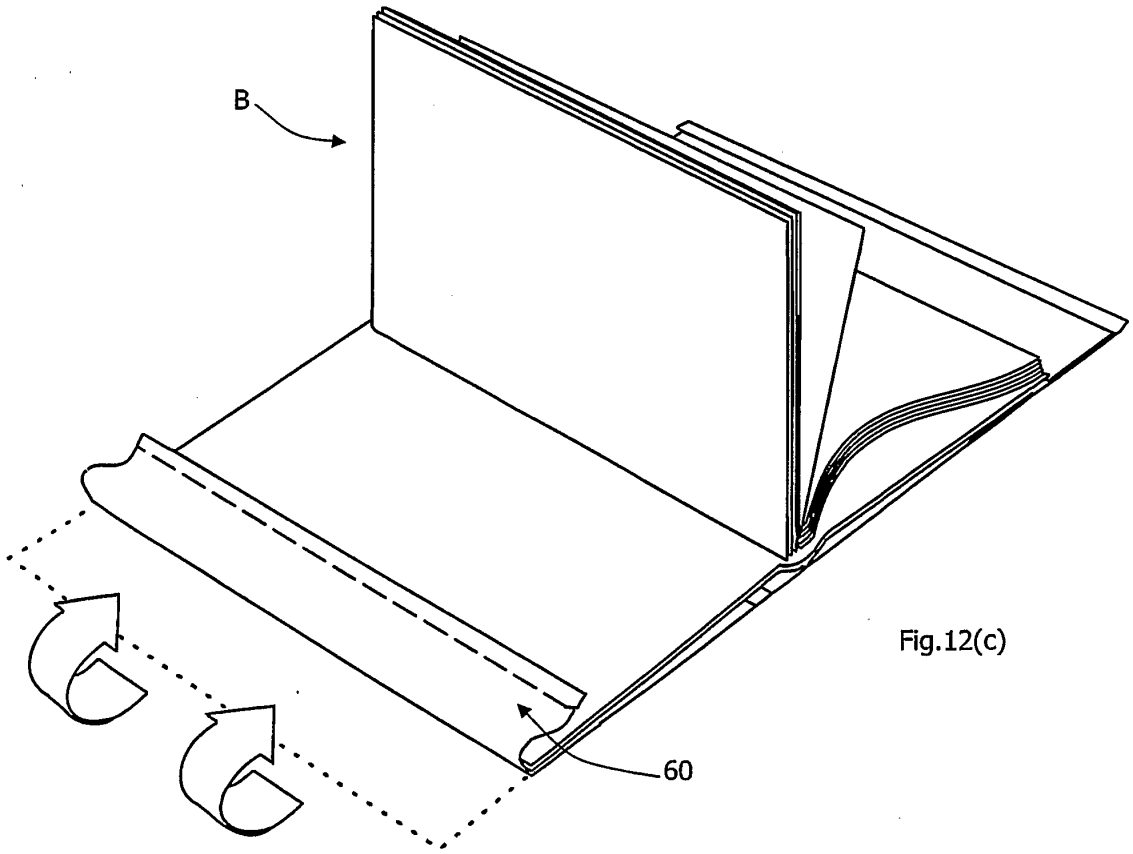

Fig.12(c)

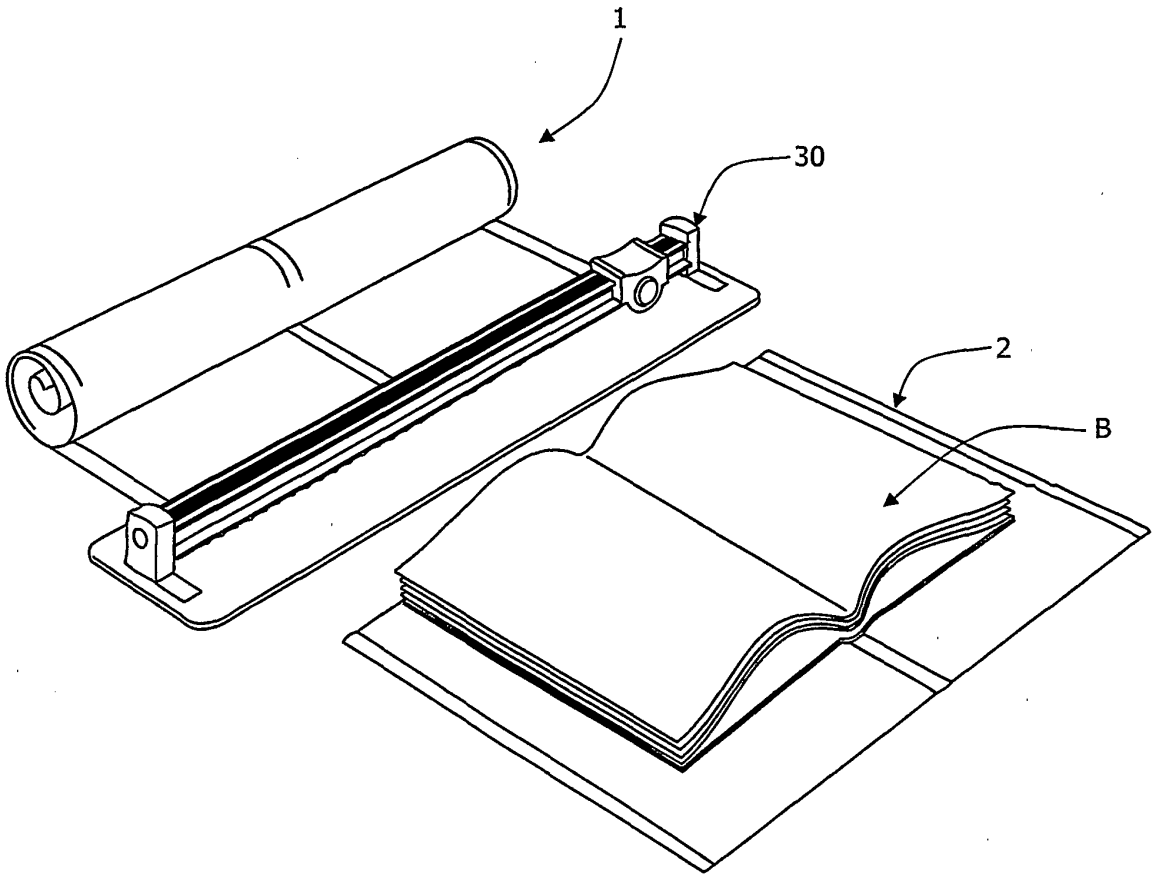

Fig.13(a)

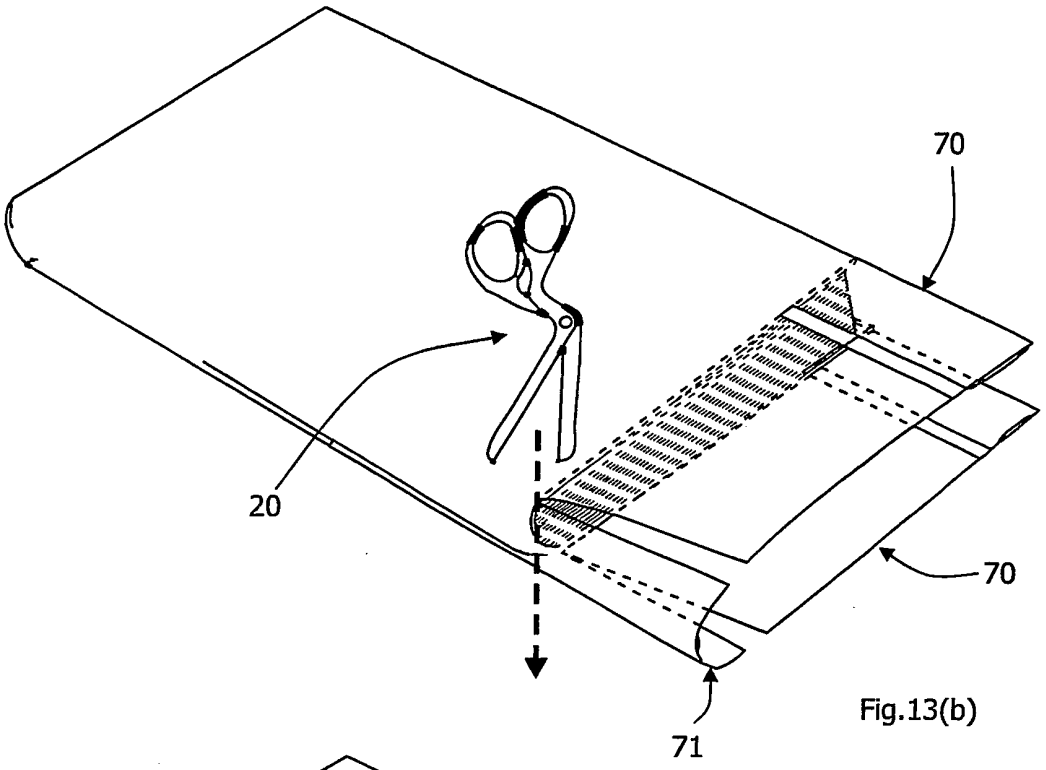

Fig.13(b)

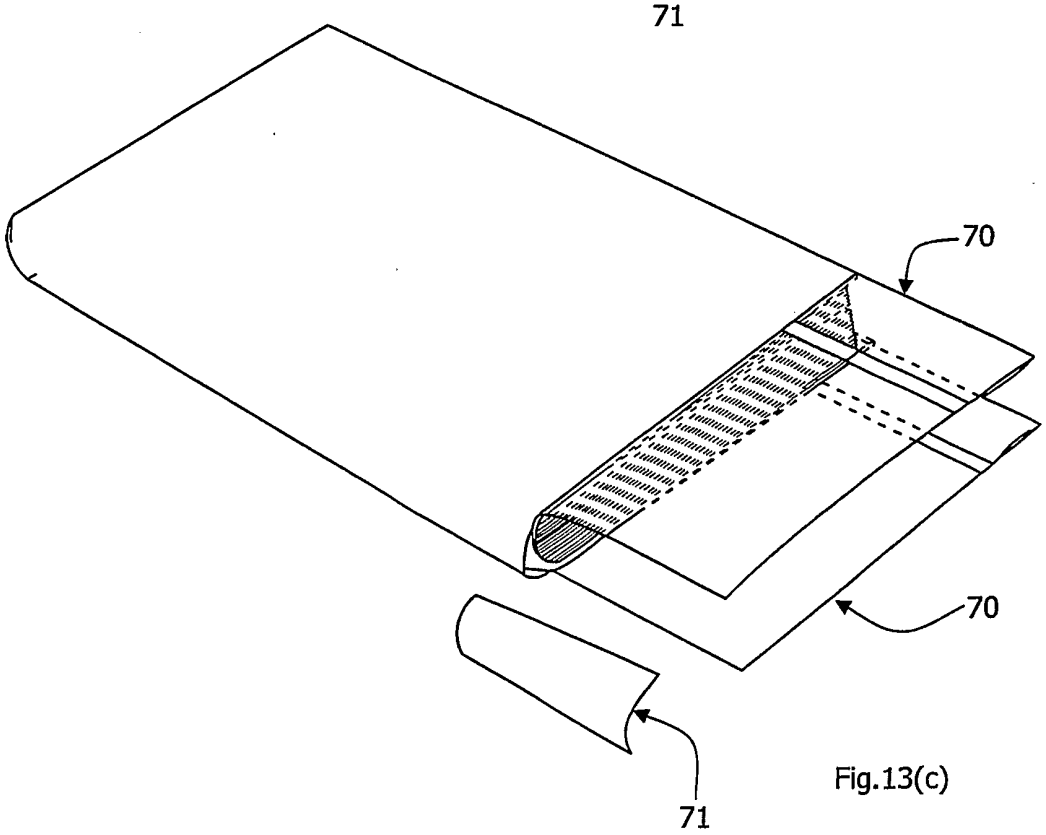

Fig.13(c)

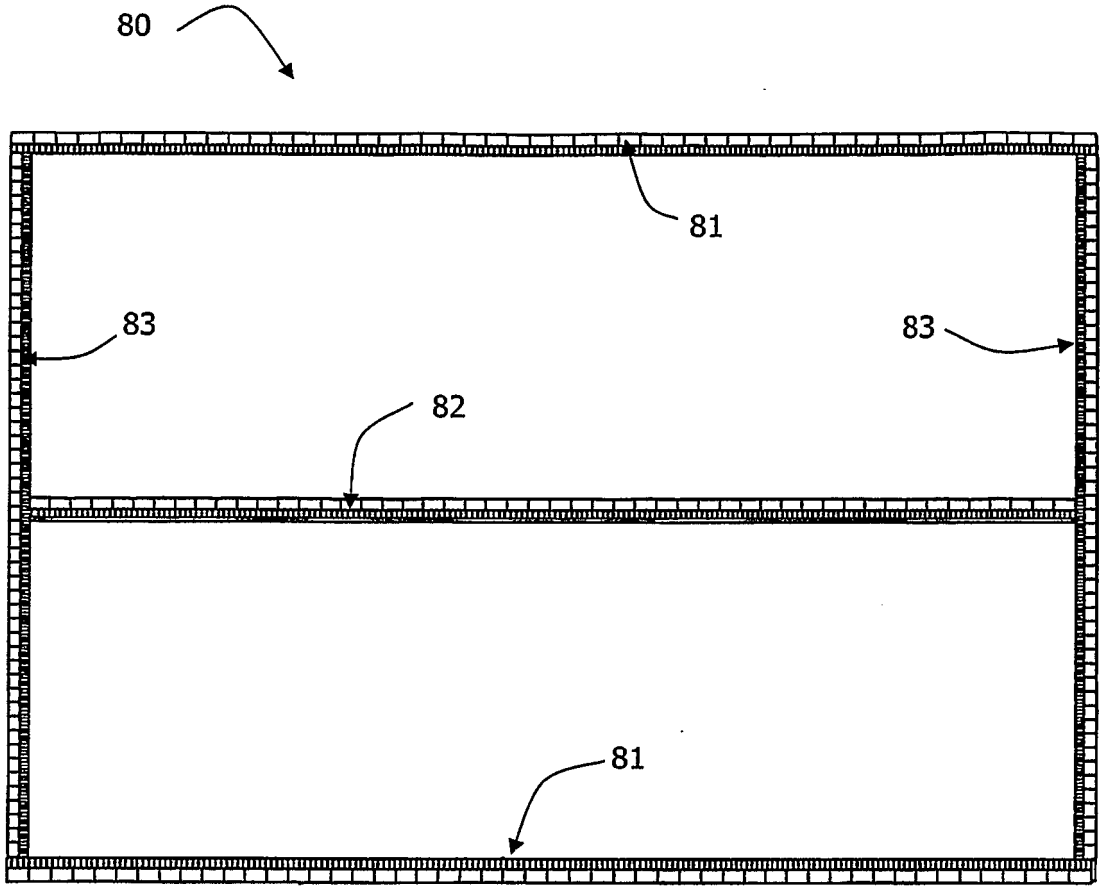

Fig.14

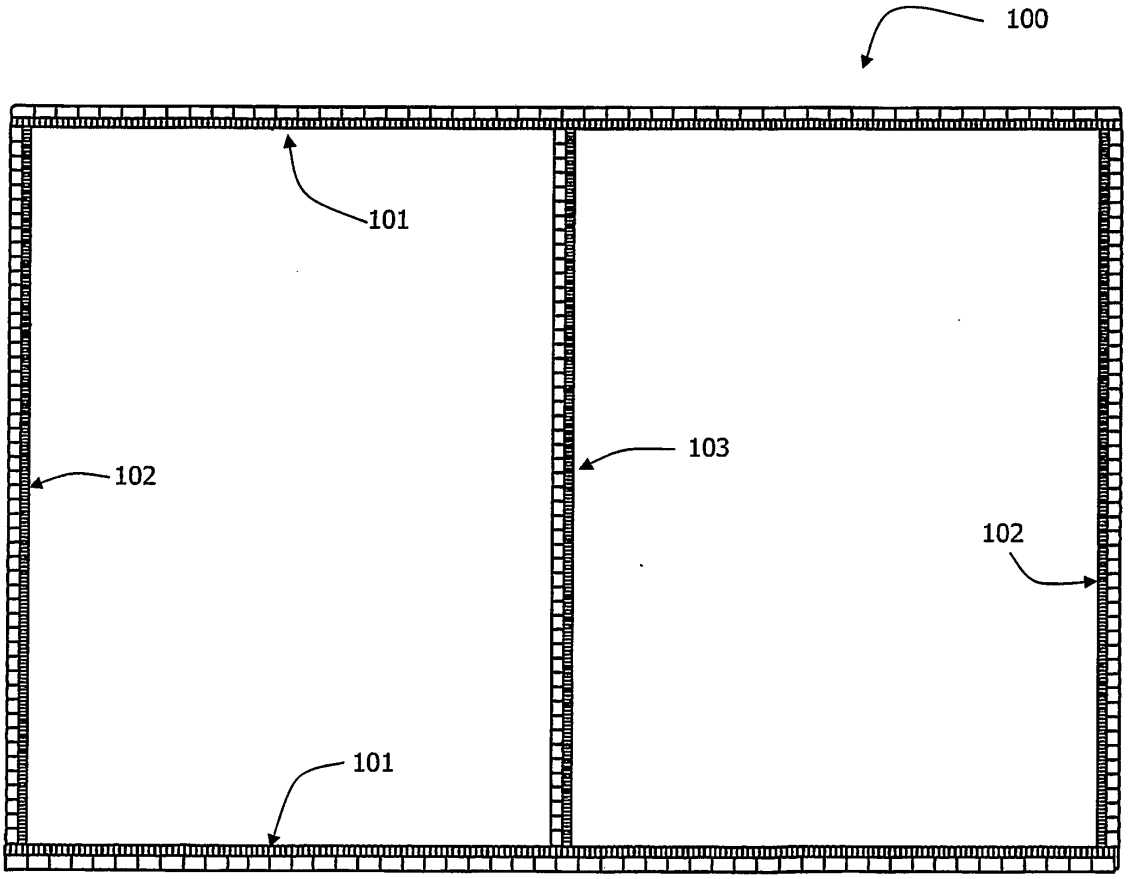

Fig.15

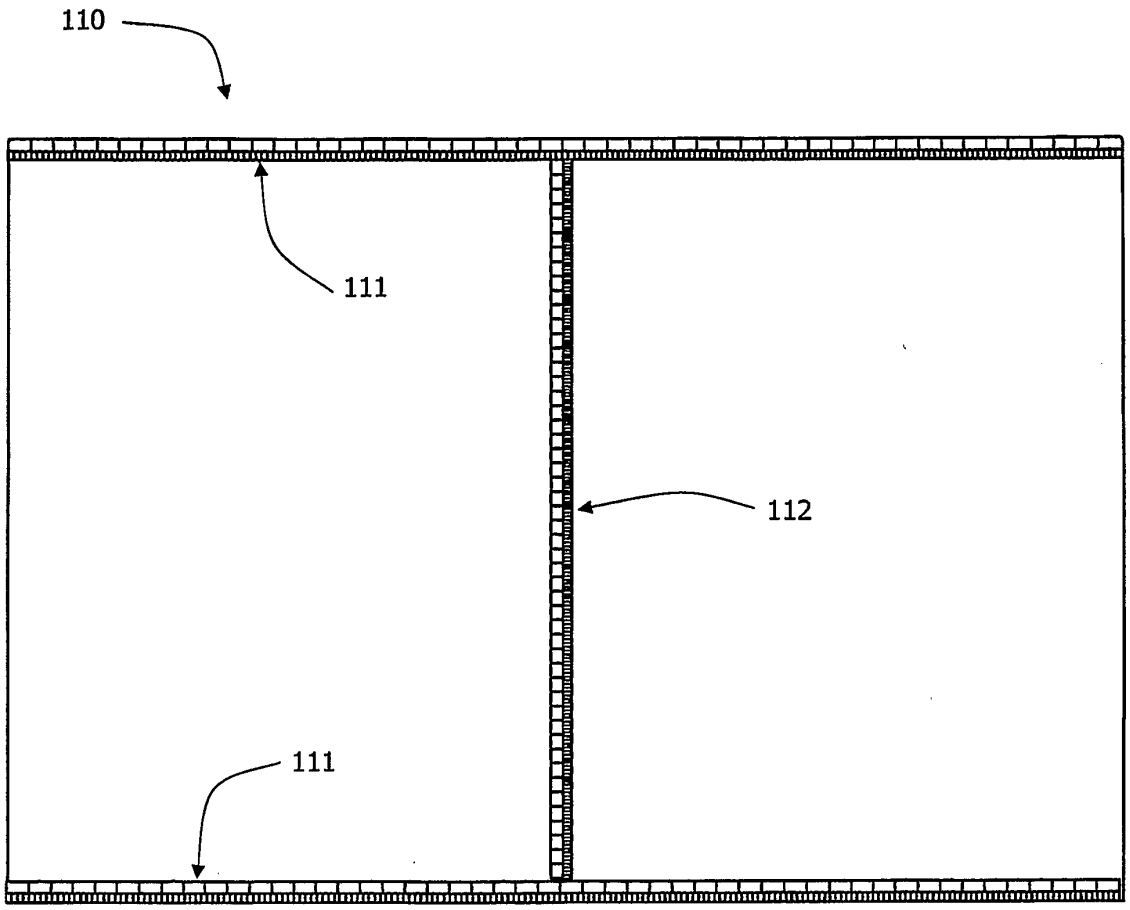

Fig.16

REFERENCES CITED IN THE DESCRIPTION

This list of references cited by the applicant is for the reader's convenience only. It does not form part of the European patent document. Even though great care has been taken in compiling the references, errors or omissions cannot be excluded and the EPO disclaims all liability in this regard.

Patent documents cited in the description

- IE 61667 **[0002]**