(19) Europäisches Patentamt
European Patent Office
Office européen des brevets

(11) EP 1 876 866 A3

(12) EUROPEAN PATENT APPLICATION

(88) Date of publication A3:
03.07.2013 Bulletin 2013/27

(43) Date of publication A2:
09.01.2008 Bulletin 2008/02

(21) Application number: **07017854.6**

(22) Date of filing: **19.01.2005**

(51) Int Cl.:
H05B 7/10 *(2006.01)*

(84) Designated Contracting States:
AT BE BG CH CY CZ DE DK EE ES FI FR GB GR HU IE IS IT LI LT LU MC NL PL PT RO SE SI SK TR

(30) Priority: **19.01.2004 ZA 200400360**
05.02.2004 ZA 200400936
05.02.2004 ZA 200400938
05.02.2004 ZA 200400937
04.08.2004 ZA 200406208
04.08.2004 ZA 200406209
14.10.2004 ZA 200408292

(62) Document number(s) of the earlier application(s) in accordance with Art. 76 EPC:
05702724.5 / 1 721 493

(71) Applicant: **Metix (Pty) Limited**
Sandton 2196 (ZA)

(72) Inventor: **Venter, Jacques**
2091 Johannesburg (ZA)

(74) Representative: **Price, Nigel John King et al**
J A Kemp
14 South Square
Gray's Inn
London WC1R 5JJ (GB)

(54) Arc furnace pressure ring assembly

(57) The invention provides for a pressure ring assembly [10] suitable for use in an electric arc furnace, wherein the pressure ring assembly [10] comprises at least two pressure ring segments [22] engaging each other, at least one contact shoe [50] arranged between the pressure ring [20] and an electrode, and a piston arrangement [40] between the pressure ring segment [22] and the contact shoe [50] for forcing the contact shoe [50] into electrical contact with the electrode. The pressure ring assembly [10] is characterised therein that it is made of a metal alloy wherein a first metal of the alloy is copper, and a second metal is selected from a group comprising of chrome and silver. The pressure ring assembly [10] is further characterised therein that each pressure ring segment [22] includes two tapered engagement formations [27] defined within the pressure ring segment [22] and being adapted to be engaged by complimentarily tapered connecting means [60] such that the pressure ring segments [22] are drawn towards each other during installation of the pressure ring assembly. The pressure ring assembly [10] further provides for a sealing arrangement between the pressure ring and the contact shoe [50].

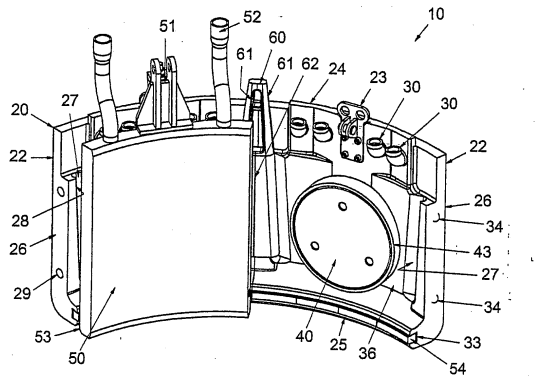

FIGURE 1

EP 1 876 866 A3

Europäisches Patentamt
European Patent Office
Office européen des brevets

EUROPEAN SEARCH REPORT

Application Number
EP 07 01 7854

DOCUMENTS CONSIDERED TO BE RELEVANT

Category	Citation of document with indication, where appropriate, of relevant passages	Relevant to claim	CLASSIFICATION OF THE APPLICATION (IPC)
A	WO 97/50153 A1 (ACTION FINANCES IND [FR]; ROCHE CHRISTIAN ADELPHIN CHARL [FR]; CUFI MA) 31 December 1997 (1997-12-31) * figures 1,2 * -----	1,12	INV. H05B7/10
			TECHNICAL FIELDS SEARCHED (IPC) H05B

The present search report has been drawn up for all claims

1

Place of search	Date of completion of the search	Examiner
The Hague	21 May 2013	Taccoen, J

CATEGORY OF CITED DOCUMENTS

X : particularly relevant if taken alone
Y : particularly relevant if combined with another document of the same category
A : technological background
O : non-written disclosure
P : intermediate document

T : theory or principle underlying the invention
E : earlier patent document, but published on, or after the filing date
D : document cited in the application
L : document cited for other reasons
.....
& : member of the same patent family, corresponding document

EPO FORM 1503 03.82 (P04C01)

ANNEX TO THE EUROPEAN SEARCH REPORT ON EUROPEAN PATENT APPLICATION NO. EP 07 01 7854

This annex lists the patent family members relating to the patent documents cited in the above-mentioned European search report.
The members are as contained in the European Patent Office EDP file on
The European Patent Office is in no way liable for these particulars which are merely given for the purpose of information.

21-05-2013

Patent document cited in search report	Publication date	Patent family member(s)	Publication date
WO 9750153 A1	31-12-1997	FR 2750537 A1	02-01-1998
		WO 9750153 A1	31-12-1997

EPO FORM P0459

For more details about this annex : see Official Journal of the European Patent Office, No. 12/82