(19) Europäisches Patentamt
European Patent Office
Office européen des brevets

(11) EP 1 956 175 A2

(12) **EUROPEAN PATENT APPLICATION**

(43) Date of publication:
13.08.2008 Bulletin 2008/33

(51) Int Cl.:
E06B 3/70 *(2006.01)*

(21) Application number: **08250450.7**

(22) Date of filing: **07.02.2008**

(84) Designated Contracting States:
AT BE BG CH CY CZ DE DK EE ES FI FR GB GR HR HU IE IS IT LI LT LU LV MC MT NL NO PL PT RO SE SI SK TR
Designated Extension States:
AL BA MK RS

(30) Priority: **07.02.2007 GB 0702386**

(71) Applicant: **NAN YA PLASTICS CORPORATION**
Taipei (TW)

(72) Inventor: **Chen Wang, Kuei-Yung**
Taipei (TW)

(74) Representative: **Johnson, Terence Leslie**
Marks & Clerk
90 Long Acre
London, WC2E 9RA (GB)

(54) **Frame for a closure**

(57) The invention relates to a frame for a closure such a door leaf 1, the frame being integral with the door leaf which may suitably be of fibreglass (GRP) of 45 - 60mm thickness. At least one element 2 of the frame comprises rails 7, 7' of a PVC foam material which is applied to the leaf by moulding and trimmable on site to fit a given opening. The height and/or width can be trimmed as required.

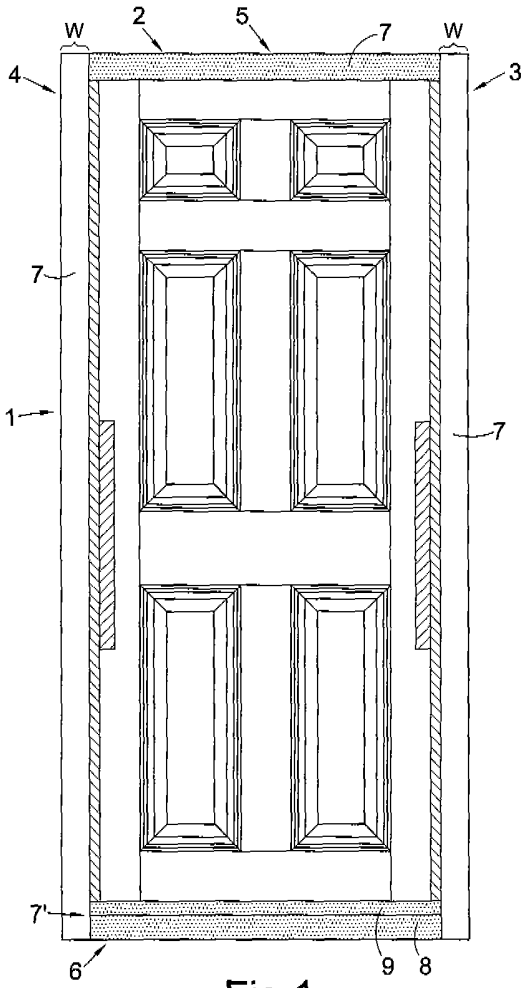

Fig.1

EP 1 956 175 A2

Description

[0001] The invention relates to a frame, and more particularly to a closure frame part or closure *per se* such as a door leaf

[0002] Such members as referred to above are often supplied to a builder or do-it-yourself person in a standard size. However, this suffers from the disadvantage that the door leaf is unsuitable for fitting into an opening into which the door leaf is to be mounted.

[0003] It is an object of the invention to seek to mitigate this disadvantage.

[0004] According to one aspect of the invention, there is provided a closure frame part, comprising an element adapted for adjusting a boundary dimension of the frame part.

[0005] The frame part may be substantially rectangular, and each side may have an element for adjusting a boundary dimension of the frame part, suitably the or each element being trimmable whereby a boundary dimension of the frame part is reduced. Thereby, the frame part can be adjusted in size for fitting into a variety of sizes of opening.

[0006] The or each element may comprise a different material from the remainder of the frame part. This provides for ease of trimming, e.g. on site.

[0007] The frame part may be integral with a body of a closure such as a door leaf.

[0008] Thus the door leaf may be a GRP (glass reinforced plastic) door leaf.

[0009] The or each element may preferably comprise a foam material. This provides for ease of construction, particularly when the foam may comprise a PVC foam.

[0010] The PVC foam may be applied to the remainder of the leaf by a moulding process e.g. by extrusion or in situ in a mould. Such moulding may also be carried out simultaneously with moulding of the door leaf itself.

[0011] The or each element may comprise a rail having a width of about 60mm. The rails may comprise transoms and stiles of a door leaf.

[0012] Suitably a base transom of the door leaf may comprise a plurality of rails which are superposed in an in use vertical sense, there being suitably two rails the outer one having a width of about 60mm and the inner one a width of about 30mm, suitably 30.5mm.

[0013] According to a second aspect of the invention there is provided a building including a closure from part or closure leaf incorporating a closure from parts as hereinbefore defined.

[0014] A GRP door leaf embodying the invention is hereinafter described, by way of example, with reference to the accompanying drawings.

Fig. 1 is a frontal elevational view of a door leaf according to the invention;

Fig. 2 is a top plan view of the door leaf of Fig. 1; and

Fig. 3 is a side elevational view of the door leaf of Fig. 1.

[0015] Referring to the drawings there is shown a closure frame part in the form of a GRP door leaf 1, comprising an element 2 for adjusting the boundary dimension of the door leaf 1.

[0016] Stiles 3 and 4 and transoms 5 and 6 of the door leaf 1 comprise outer elongate elements in the form of rails 7, 7' of trimmable material in the embodiment PVC foam material which is applied to the door leaf 1 by any suitable means e.g. by moulding separately to the door leaf edges, or integrally during moulding of the door leaf *per se.*

[0017] In the embodiment the rails 7 have a width 'W' of about 60mm and comprise a single length of PVC foam.

[0018] The bottom rail or transom 7' is formed of two superimposed lengths of PVC foam, the outer one 8 having a width 'W' of 60mm and the inner one 9 a width 'W" of 30.5mm.

[0019] In use, a purchaser of a door leaf 1 embodying the invention as shown in the drawings can trim the width and/or height of the door leaf 1 on site as desired, to fit an opening. Thus the adjustability of the dimensions (area) of the door leaf 1 provides for fitting in a variety of different-size openings as required.

[0020] In the embodiment, the maximum or preferred trimmability of the door leaf is:-

Side/stile):	40mm off
Top/transom):	30mm off
Bottom/transom):	70mm off

[0021] The two-part construction of the bottom transom 7' provides for additional adjustability, and strength at a part of the door leaf 1 which can expect heavy duty.

[0022] The door leaf can be of fibre glass in the embodiment, and can be trimmable for a 45-60mm thickness thereof.

Claims

1. A closure frame part, comprising an element adapted for adjusting a boundary dimension of the frame part, **characterised by** the element (2) being applied to the frame part (1) by moulding.

2. A closure frame part according to Claim 1, **characterised by** being substantially rectangular, and by each side (3, 4, 5, 6) having an element (2) for adjusting a boundary dimension of the frame part (1).

3. A closure frame part according to Claim 1 or Claim 2, **characterised by** the or each element (2) being trimmable whereby a boundary dimension of the

frame part (1) is adjustable by being reduced in thickness.

4. A closure frame part according to Claim 3, **characterised by** the or each element (2) comprising a different material from the remainder of the frame part (1).

5. A closure frame part according to any of Claims 2-4, **characterised by** the or each element (1) comprising a foam material.

6. A closure frame part according to Claim 5, **characterised by** the or each element (1) being a PVC foam applied to the remainder of the leaf by an integral or separate moulding process.

7. A closure frame part according to any of Claims 2 to 6, the or each element (1) comprising a rail (7), (7') having a width of about 60mm.

8. A closure frame part according to Claim 7, **characterised by** the rails comprising transoms (7') and stiles (7) of a door leaf (1).

9. A closure frame part according to Claim 8, **characterised by** a base transom (7') of the door leaf (1) comprising a plurality of rails (8, 9) which are superposed in an in use vertical sense.

10. A closure frame part according to Claim 9, **characterised by** there being two rails (8, 9), the outer one (8) having a width of about 60mm and the inner one (9) having a width of about 30mm.

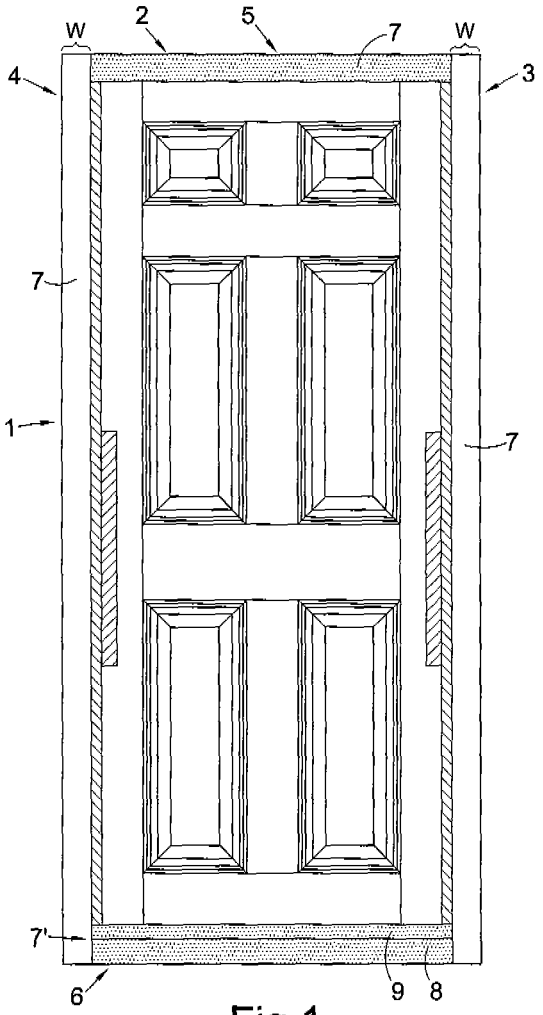

Fig.1

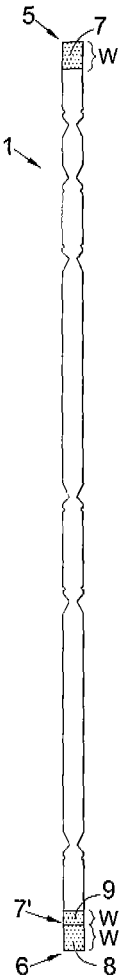

Fig.3

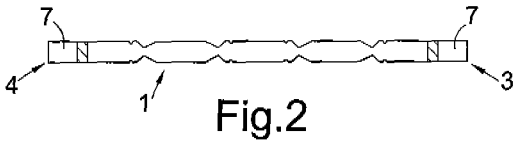

Fig.2