(19) Europäisches Patentamt
European Patent Office
Office européen des brevets

(11) EP 2 025 431 A1

(12) EUROPEAN PATENT APPLICATION

(43) Date of publication:
18.02.2009 Bulletin 2009/08

(51) Int Cl.:
B22D 1/00 *(2006.01)* ***B22D 41/08*** *(2006.01)*

(21) Application number: **08450090.9**

(22) Date of filing: **19.06.2008**

(84) Designated Contracting States:
AT BE BG CH CY CZ DE DK EE ES FI FR GB GR HR HU IE IS IT LI LT LU LV MC MT NL NO PL PT RO SE SI SK TR
Designated Extension States:
AL BA MK RS

(30) Priority: **17.08.2007 EA 200702122**

(71) Applicant: **LLC "TMT"**
Peresechenie Logoiskiy tr&MKAD
223053, Minsk district (BY)

(72) Inventors:
- **Borovik, Valery Vasilievich**
  Zhlobin 247210 (BY)
- **Kozlov, Alexander Adamovich**
  Zhlobin 247210 (BY)

(74) Representative: **KLIMENT & HENHAPEL**
Patentanwälte OG
Singerstrasse 8
1010 Wien (AT)

(54) Device for metal refining in the pony ladle

(57) The invention relates to ferrous metallurgy, in particular to devices for steel refining by rare gas in a pony ladle. The device for metal refining in the pony ladle containing tuyere placed axially to a flow of effluent metal and done in such a way as to allow creation of rare gas bubbles flow is directed to guarantee maximum outlet of inclusions to refinery slag.

For the purpose of resisting whirl metal movement occurring above nonswirl nozzle the inner surface of the receiving cone of the device is configured in the form of rectangular prism converting to truncated cone and creation of rare gas bubbles flow is provided by a porous refractory insert placed in the body of tuyere in such a way that the form thereof in cross section duplicates the form of the inner surface of the receiving cone.

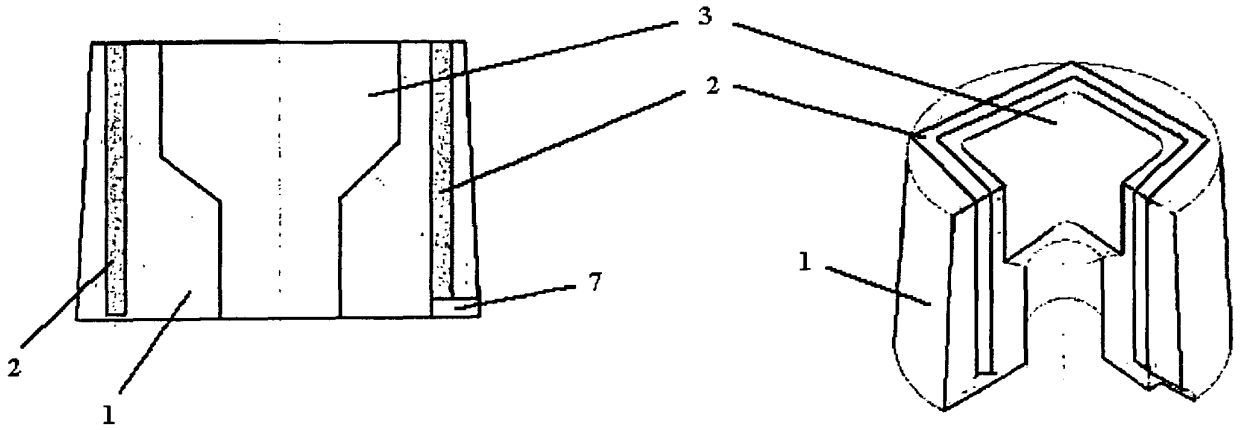

Fig. 1

EP 2 025 431 A1

Description

[0001] This invention relates to ferrous metallurgy, in particular to devices for steel refining by rare gas in the pony ladle.

[0002] Known is the device for EBT (external bottom tapping) discharge metal from EAF [1], where the outlet pot of the EBT in the profile is rectangular oval shaped and has conidial form.

Known are the schemes and devices for steel refining by rare gas in the pony ladle [2, 3].

[0003] The period of single portion of metal in pony ladles is extremely limited and insufficient for effective removal of basic mass of inclusions. Fall in temperature results in steel self - deoxidation and formation of the sufficient quantity of exogenous nonmetallic inclusions. At the same time small pieces of lining are washed away by metal convection current. This leads to formation of exogenous nonmetallic inclusions. Besides, the whirl metal movement in the form of crater occurs during outflow of the metal stream from pony ladle above nonswirl nozzle and nonmetallic inclusions and small pieces of slag are swallowed in. The above known schemes and devices have complex construction and do not provide competence of outlet of nonmetallic inclusions and small parts of slag from metal.

[0004] The most similar to the claimed device is the device for metal refining in pony ladle [4] which contains ceramic tuyere placed in the pony ladle axially to a flow of metal flowing to the mold and done in such a way as to allow creation of bubbles flow of rare gas axially to mentioned flow of effluent metal. The mounting of the ceramic tuyere in the close proximity to the zone of accumulation of nonmetallic inclusions allows to increase the effectiveness of refining and the curtain of rare gas bubbles causes certain braking of radial speed in metal flow. However the above-mentioned device recognized as a prototype does not provide sufficient fall of radial speed in metal flow flowing through a pony ladle and consequently competence outlet of inclusions to refining slag is not achieved as the prototype does not disclose the impact of the geometric form of the inner surface of the tuyere on decrease in radial speed in the metal flow. Besides according to the prototype the porous insert included to the tuyere frame for making bubbles flow of rare gas is ring - shaped in sections. The indicated ring shape is not the best one from the point of view of increasing the quantity the bubbles of rare gas. Activity of the curtain from rare gas penetrating into metal can be enhanced by increasing a quantity of bubbles that will consequently result in further decrease in radial speed in metal flow which is flowing through the pony ladle.

[0005] The technical result achieved by this device is that maximum outlet of inclusions to the refining slag is provided.

[0006] The achievement of the technical result allows solving the assigned task by means of the proposed device for metal refining in the pony ladle containing the tuyere which is placed axially to the flow of effluent metal and made in such a way as to allow creation of a flow of rare gas bubble. According to the invention the inner surface of the receiving cone for metal flowing is configured in the form of rectangular prism (parallelepiped) converting to a truncated cone. The body of the tuyere is provided with the porous refractory insert covering the inner surface of the receiving cone in order to resist the whirl metal movement occurring above nonswirl nozzle. The geometrical form of the insert in cross section duplicates the form of the inner surface of the receiving cone for metal flowing.

[0007] According to the invention the body of the tuyere is made predominantly of gas proof concrete material; the external face of the body of the tuyere in cross cut along long axis has the form of truncated cone and besides the mentioned body of the tuyere is supplied with connector with holes (one or more) for rare gas admission.

[0008] The essence of the invention is exposed in the figures.

Fig. 1 discloses the device for metal refining in the pony ladle.
Fig. 2 discloses the scheme for setting the refining device in the pony ladle and the scheme of rare gas admission.

[0009] The drawings contain the following elements:

1 - the body of the tuyere for metal refining; 2 - porous refractory insert; 3 - the inner surface of the body of the tuyere serving as receiving cone; 4 - the pony ladle; 5 - an effluent flow of metal; 6 - the flow of rare gas bubbles; 7 - the outlets for rare gas admission; 8 - the nonswirl nozzle.

[0010] The device for metal refining from nonmetallic inclusions and gases contains tuyere, body 1 of which is made of gas proof refractory material and has the form of a truncated cone.
The porous refractory setting is placed into the body 2, which allows creating a flow of rare gas bubbles 6, predominantly argon, with diameter up to 3mm.

[0011] The inner surface 3 of the body of the tuyere serving as a receiving cone is configured as rectangular prism (parallelepiped), converting to truncated cone to let metal in. The rectangular prism form of the inner part of device allows to resist metal whirl movement over the nonswirl nozzle 8.
There are some holes 7 for rare gas admission in the inner part of the body 1 which is connected with porous refractory insert 2.
Fig.2 represents the variant of mounting the refining device where metal flows to the pony ladle and farther to the mold.

The mounting the device for metal refining in the pony ladle (as figure 2 represents), is realized directly close to outgoing metal flow 5 and pony ladle 4 to the mold (figure 2 does not represent), that means the body 1 of the device is mounted in the pony ladle 4 axially to the flow 5 of metal flowing from pony ladle to the mold.

The functioning of the device is fulfilled in the following way.

The metal flow 5 enters to the inner part of the body of the tuyere 3 acting as a receiving cone. By means of holes 7 connected with porous mass of refining insert 2 covering the inner surface 3 in the form of rectangular prism, the flow of inputted rare gas (for example argon) is changing into flow 6 of bubbles penetrating liquid metal. The rare gas converting in the pony ladle is fulfilled in the bubble flow in order to prevent exposure of the metal surface.

The refractory insert 2 covering the inner surface 3 has the same form in the cross-section as the inner surface 3 which is rectangular. During the converting process the inputted rare gas is heated at the expense of heat loss through the lining of pony ladle.

The principle of refining by rare gas is based on the flotation method that is adhesion of nonmetallic inclusions to rare gas bubbles and outflow of the inclusions to the slag.

[0012] The inner part of the device is in the form of rectangular prism (parallelepiped) allowing resisting metal whirl movements above the nonswirl nozzle and reducing considerably the kinetic energy of nonmetallic inclusions, excluding entering to the outgoing flow. That can guarantee maximum flowing out of nonmetallic inclusions by the bubbles of rare gas to refinery slag.

[0013] The form of refractory insert 2 is also in the form of rectangular prism and duplicates the form of the inner surface of the tuyere. Such characteristics allow increasing the quantity of outgoing rare gas bubbles by extending the area of porous mass insert emitting the flow relative to prototype and as the result to increase effectiveness of the flotation process.

[0014] The rare gas converting directly before crystallization allows not only to reduce the quantity of nonmetallic inclusions that are already in metal as well as to prevent ingress to the ingot of endogenous inclusions which are a result of steel self - deoxidation by fall in temperature in the pony ladle in the process of casting. Rare gas converting just prior to crystallization has an additional positive effect which is the decay of hydrogen content to extremely low values and partial removal of nitrogen according to Sivert's law

[0015] Argon bubbles contain neither nitrogen nor hydrogen and they are evacuated chambers. As hydrogen has a high diffusion rate and practically does not come into strong chemical link in contrast to nitrogen that determines high degree of hydrogen removal. Hydrogen moves away insignificantly because of low degree of diffusion and property to form strong chemical bonds with some metals.

[0016] Sources of information

1. BY 2736 U, IPC7 B22D 11/10, 27/20 published 30.06.2006
2. G.V. Efimov, Physico - Technological Institute of Metals and Ferro-alloys of The Ukraine National Academy of Science. The process of steel refining in a pony ladle. Steel, 2001, #4.
3. V. Y. Sakulin, V. P. Migal Public corporation "Borovichy refractory plant". Production and application of refractory devices for steel refining out of furnace. Electrometallurgy 2004 #3.
4. Application EA 200501284 A1, IPC7 B22D 11/116 published 27.04.2007

Claims

1. Device for metal refining in pony ladle containing the tuyere placed axially to flow of effluent metal and made in such a way as to allow creation of a flow of rare gas bubble, ***characterized in that*** in order to resist whirl metal movements occurring above nonswirl nozzle, the inner surface of the receiving cone for metal flowing is configured in the form of rectangular prism converting to truncated cone, creation of rare gas bubbles flow is provided by a porous refractory insert placed in the body of the tuyere in such a way that the form thereof in cross section duplicates the form of the inner surface of the receiving cone.

2. Device for metal refining according to claim 1 ***characterized in that*** the body of the tuyere is made of gas proof concrete.

3. Device for metal refining according to claims 1 or 2 ***characterized in that*** the external face of the body of the tuyere in cross cut along long axis has the form of truncated cone.

4. Device for metal refining according to any claims 1 - 3 ***characterized in that*** the body of the tuyere is supplied with holes for rare gas admission.

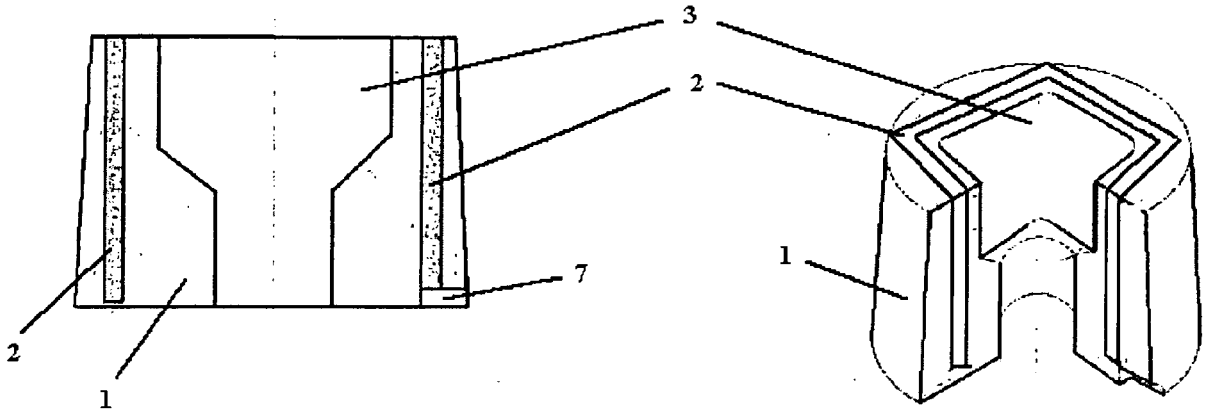

Fig. 1

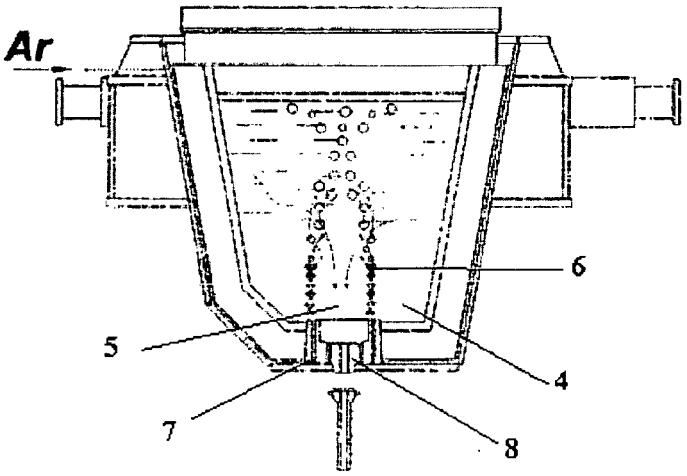

Fig. 2

Europäisches Patentamt
European Patent Office
Office européen des brevets

EUROPEAN SEARCH REPORT

Application Number
EP 08 45 0090

DOCUMENTS CONSIDERED TO BE RELEVANT

Category	Citation of document with indication, where appropriate, of relevant passages	Relevant to claim	CLASSIFICATION OF THE APPLICATION (IPC)
A	GB 2 149 699 A (USS ENG & CONSULT) 19 June 1985 (1985-06-19) * page 2, line 122 - page 3, line 4 * * page 3, line 53 - line 66 * * claims 1-16; figures 1-4 * -----	1-4	INV. B22D1/00 B22D41/08
A	EP 0 282 824 A (ARBED [LU]) 21 September 1988 (1988-09-21) * claims 1-10; figures 1-4 * -----	1-4	
A	EP 0 956 917 A (RAUBUCH BERTHOLD [DE]) 17 November 1999 (1999-11-17) * paragraph [0021]; figures 1,2 * * claims 1-8 * -----	1-4	
A	EP 0 576 212 A (FOSECO INT [GB]) 29 December 1993 (1993-12-29) * claims 1-22; figure 1 * -----	1-4	
A	GB 1 368 390 A (STOECKER & KUNZ GMBH) 25 September 1974 (1974-09-25) * the whole document * -----	1-4	TECHNICAL FIELDS SEARCHED (IPC) B22D F27B C21C
A	US 4 139 184 A (GRIFFITH CECIL B ET AL) 13 February 1979 (1979-02-13) * the whole document * -----	1-4	

The present search report has been drawn up for all claims

Place of search	Date of completion of the search	Examiner
Munich	30 September 2008	Lombois, Thierry

CATEGORY OF CITED DOCUMENTS

X : particularly relevant if taken alone
Y : particularly relevant if combined with another document of the same category
A : technological background
O : non-written disclosure
P : intermediate document

T : theory or principle underlying the invention
E : earlier patent document, but published on, or after the filing date
D : document cited in the application
L : document cited for other reasons
.....
& : member of the same patent family, corresponding document

1

EPO FORM 1503 03.82 (P04C01)

ANNEX TO THE EUROPEAN SEARCH REPORT ON EUROPEAN PATENT APPLICATION NO. EP 08 45 0090

This annex lists the patent family members relating to the patent documents cited in the above-mentioned European search report.
The members are as contained in the European Patent Office EDP file on
The European Patent Office is in no way liable for these particulars which are merely given for the purpose of information.

30-09-2008

Patent document cited in search report	Publication date	Patent family member(s)	Publication date
GB 2149699 A	19-06-1985	BR 8405742 A	17-09-1985
		DE 3441324 A1	30-05-1985
		FR 2555080 A1	24-05-1985
		IT 1180122 B	23-09-1987
		JP 60115353 A	21-06-1985
		ZA 8408974 A	31-07-1985
EP 0282824 A	21-09-1988	AU 1287288 A	22-09-1988
		DE 3807333 A1	06-10-1988
		FR 2612433 A1	23-09-1988
		JP 63255313 A	21-10-1988
		LU 86816 A1	17-11-1988
		ZA 8801701 A	06-09-1988
EP 0956917 A	17-11-1999	AT 277708 T	15-10-2004
		DE 19820727 A1	25-11-1999
		ES 2230765 T3	01-05-2005
EP 0576212 A	29-12-1993	DE 69324408 D1	20-05-1999
		DE 69324408 T2	16-12-1999
		ES 2132188 T3	16-08-1999
		GB 2267855 A	22-12-1993
GB 1368390 A	25-09-1974	AT 321480 B	10-04-1975
		ES 409563 A1	01-12-1975
		FR 2169894 A1	14-09-1973
		IT 974028 B	20-06-1974
		SE 384156 B	26-04-1976
US 4139184 A	13-02-1979	NONE	

EPO FORM P0459

For more details about this annex : see Official Journal of the European Patent Office, No. 12/82

REFERENCES CITED IN THE DESCRIPTION

This list of references cited by the applicant is for the reader's convenience only. It does not form part of the European patent document. Even though great care has been taken in compiling the references, errors or omissions cannot be excluded and the EPO disclaims all liability in this regard.

Patent documents cited in the description

- EA 200501284 A1 **[0016]**

Non-patent literature cited in the description

- **G.V. EFIMOV.** Physico - Technological Institute of Metals and Ferro-alloys of The Ukraine National Academy of Science. *The process of steel refining in a pony ladle,* 2001 **[0016]**
- **V. Y. SAKULIN ; V. P. MIGAL.** Public corporation ''Borovichy refractory plant. *Production and application of refractory devices for steel refining out of furnace. Electrometallurgy,* 2003 **[0016]**