(19) Europäisches Patentamt
European Patent Office
Office européen des brevets

(11) EP 2 053 336 B1

(12) **EUROPEAN PATENT SPECIFICATION**

(45) Date of publication and mention of the grant of the patent:
04.08.2010 Bulletin 2010/31

(21) Application number: **07380285.2**

(22) Date of filing: **22.10.2007**

(51) Int Cl.:
F41A 3/10 *(2006.01)* ***F41C 7/06*** *(2006.01)*

(54) **Single-shot rifle**

Einzelladergewehr

Carabine à un coup

(84) Designated Contracting States:
AT BE BG CH CY CZ DE DK EE ES FI FR GB GR HU IE IS IT LI LT LU LV MC MT NL PL PT RO SE SI SK TR

(43) Date of publication of application:
29.04.2009 Bulletin 2009/18

(73) Proprietor: **Ardesa S.A.**
48016 Zamudio-Bilbao (Bilbao) (ES)

(72) Inventor: **Calvete Zumalde, Angel**
48016 Zamudio-Bilbao (Bilbao) (ES)

(74) Representative: **Carpintero Lopez, Francisco et al**
Herrero & Asociados, S.L.
Alcalá 35
28014 Madrid (ES)

(56) References cited:
US-A- 511 633
US-A- 592 239
US-A- 2 445 339
US-A- 3 355 833
US-A- 4 040 196

Remarks:

The file contains technical information submitted after the application was filed and not included in this specification

Note: Within nine months of the publication of the mention of the grant of the European patent in the European Patent Bulletin, any person may give notice to the European Patent Office of opposition to that patent, in accordance with the Implementing Regulations. Notice of opposition shall not be deemed to have been filed until the opposition fee has been paid. (Art. 99(1) European Patent Convention).

EP 2 053 336 B1

Printed by Jouve, 75001 PARIS (FR)

Description

OBJECT OF THE INVENTION

[0001] The present invention relates to a high-precision single-shot rifle, i.e. it allows a single shot per charge, the ammunition used having a metal casing, which can be applied in the arms industry, in which the unlocking and loading operations are performed manually by a lever, allowing quickly and easily changing the barrel of the rifle, which makes it easier to perform rifle maintenance and cleaning operations in addition to the great versatility this entails by allowing the use of different barrels and different calibers with the same rifle.

BACKGROUND OF THE INVENTION

[0002] Traditional breech-loading single shot rifles, as described by United States Patent No. US-511633-A, consists in the combination, in a breech-loading firearm, with the barrel thereof, of a breech-block having sliding interlocking movement upon the butt-end of the barrel, which is adapted thereto, a hammer pivoted in the said block, a trigger also pivoted in the block, and depending therefrom, and adapted to co-act with the said hammer, and a spring for actuating the breech-block in its upward movement.

[0003] This gun has a barrel, a stock, constructed with a chamber, and a guard plate, attached at its rear end to the stock. The butt-end of the gun barrel is constructed with two corresponding transverse grooves, inclined forward from the vertical. The gun further comprises a breech-block, constructed with a recess or chamber, being constructed with two inclined flanges, thus, the breech-block is adapted to have inclined sliding interlocking movement upon the butt-end of the gun-barrel.

[0004] The breech-block is supported by the bearing of its upper end upon the gun-barrel, and the bearing of its lower end against the walls of an opening, formed in the guard, and through which it passes. Thus, the block is locked or retained in its open position against the tension of its main-spring.

[0005] A hammer is hung on a pivot mounted in the breech-block.

[0006] A trigger, hung on a horizontal pivot, mounted in te lower end of the breech-block.

[0007] The main-spring has the two-fold function of closing the breech-block and maintaining the same in tis closed position, and of operating the hammer in firing the cartridge in the gun.

[0008] To load the gun its breech-block is pressed downward against the tension of its main spring, by its finger-piece, whereby its lower end is thrown forward. The block will be retained in its open position during the loading of the gun. The block is allowed to be returned to its closed position by its main-spring which is restrained by downward pressure upon the finger-piece of the block, whereby the same is prevented from closing with any shock. The hammer is cocked against the tension of the spring.

[0009] In rifles existing today, the barrel is connected or fastened to the bolt by means of threading or other similar means preventing the user from being able to separate the barrel and the bolt, having to use the services of a gunsmith due to the complexity and specific tools required for the assembly and disassembly operations.

[0010] Some of the rifles mentioned in the preceding paragraph correspond to percussion rifles, such as, for example, the Sharps rifle, comprising mechanisms referred to as side-hammer or Sharps-Borchardt, or the rifle corresponding to the manufacturer Marlin, specifically the Ballard rifle model, as well as the coil spring-type Winchester rifle, such as the Low-wall Musket model.

[0011] Some of the drawbacks of these rifles include the fact that they do not allow quickly and easily changing the barrel, which is rather impractical since it does not enable using different calibers and barrel configurations, nor does it enable the user to easily disassemble the barrel for cleaning it.

[0012] Furthermore, given the connection between the barrel and the bolt in rifles existing today, these rifles often have very little precision as a result of the transmission of stress and strain to the rifle receiver.

[0013] Finally, occasionally, as a result of ammunition defects or overlapping, the firing pin perforates the primer when firing, causing a high-pressure backfire towards the shooter through the firing pin passage, specifically towards the shooter's face and eyes, with the subsequent risk of a serious accident that this entails.

DESCRIPTION OF THE INVENTION

[0014] The present invention relates to a single-shot rifle according to claim 1.

[0015] An optimal contact surface for contact between bolt and barrel is thus provided. In addition, the attachment between bolt and barrel is obtained without involving the receiver, which represents a difference with regard to many conventional systems. The receiver therefore does not have to withstand the pressure and strain produced on the bolt at the moment of firing, from inside the chamber. This enables, for example, manufacturing the receiver with light alloy materials without reducing the strength of the assembly. In addition, it is very easy to disassemble the bolt with regard to the barrel, for example, for cleaning it, and it is also easy to later assemble the bolt.

[0016] The central supporting element of the rifle is the receiver, on which the barrel is borne, supported or held, which barrel, according to a preferred embodiment, is assembled to a solid element or part referred to as monobloc, with the cooperation of a cotter pin and a pair of anchoring screws attaching the solid element or monobloc to the receiver. The firing mechanisms and safety means, as well as the stock of the weapon, are also as-

sembled in the receiver.

[0017] According to a preferred embodiment of the rifle of the invention, the fixing means comprise a cotter pin, for the purpose of assuring that the position of the barrel with regard to the receiver is always the same, also obtaining precise sliding between the bolt and the barrel.

[0018] A quick and easy assembly and disassembly of the barrel and the receiver is thus achieved, said receiver being the part which houses virtually all the mechanisms of the rifle, i.e. a metal part which is assembled in the barrel with the preferred cooperation of the cotter pin which is screwed to the receiver.

[0019] The bolt is arranged adjacent to the barrel, inside which the firing pin is housed, which firing pin is operated by a spring, in a back area of the bolt, i.e. in an area opposite to the barrel.

[0020] The stock is located in the back part of the rifle, behind the receiver, and it can have a wide variety of configurations and materials, which can be changed and combined with the rest of the elements of the rifle by means of connecting them to the receiver, for example, by means of a clamping screw.

[0021] Unlike currently existing rifle locking systems, which comprise a sliding block, the bolt of the rifle proposed by the invention has at least one channel configured to slide on the actual barrel, said bolt being firmly fastened to the barrel.

[0022] The possibility of the locking system having two or more rows of engaging channels and ribs is contemplated, although with a single row the locking system provides an optimal contact surface, several times greater than the contact surface for fastening said elements in any conventional rifle the bolt of which comprises traditional bolt lugs .

[0023] Furthermore, resulting from the connection or fastening between the barrel and the bolt being carried out without the cooperation of the receiver, maximum shot precision is obtained because an advantage of the rifle of the invention with regard to the sliding locking systems in rifles of the state of the art is that they do not transmit strain or stress to said receiver, which enables their manufacture with light alloys or materials without reducing the strength of the assembly and with the subsequent savings in weight and even the economic savings this entails.

[0024] The receiver, stock, lever and remaining mechanism assembly forms a module configured to be coupled or connected to barrels of different types, configurations and calibers, whereby providing a highly versatile rifle which enables its use, in a quick and easy manner, with barrels of different calibers.

[0025] It is contemplated that said at least one rib comprises at least one rib located at the back end of the barrel, and in which said at least one channel comprises at least one channel located in the bolt and configured to receive said at least one rib, such that with said at least one rib housed in said at least one channel the bolt is attached to the barrel such that it cannot travel backwards with regard to the barrel, but such that it can travel in a direction substantially perpendicular to the barrel, by means of sliding said at least one rib in said at least one channel.

[0026] According to a practical embodiment of the invention said at least one rib comprises at least two ribs, and said at least one channel comprises at least two channels.

[0027] It is also contemplated that said at least one rib extends around at least part of the circumference of the barrel, in correspondence with the back end of the barrel.

[0028] The rifle proposed by the invention comprises several sub-assemblies, some of which are modular, which enables quickly replacing them, as in the case of the stock or the barrel, for example.

[0029] It is contemplated that the barrel, in correspondence with its back end, is provided with a solid element, also referred to as monobloc, for fixing the barrel to the receiver. Said solid element preferably has holes for attaching the barrel and the receiver by means of screws, which are threaded in said holes.

[0030] In rifles of the state of the art, said solid element is traditionally fixed to the barrel by means of a recess at the back end of the barrel, for the purpose of introducing it in a longitudinal hole of said solid element. Both parts are fastened together by means of silver welding which occasionally fails either because of an incorrect application, due to the deterioration caused over time or due to the use of the weapon, causing serious drawbacks, such as the barrel flying off, with the subsequent risk of an accident, in addition to said silver welding requiring being applied in a very precise manner because otherwise there will be porosities which, upon bluing the barrel, allow the penetration of bluing salts which will ooze out, causing an unpleasant and dirty appearance.

[0031] To solve the drawback set forth in the preceding paragraph, the barrel of the rifle proposed by the invention is configured to be frontally introduced in the solid element. At the end close to the receiver, the barrel comprises at least one flange, close to the rib, used as a stop limiting the forward exit of the barrel with regard to the solid element. Said end of the barrel, which is configured to be in contact with the solid element, can be threaded or not.

[0032] Once the barrel is introduced in the solid element, and according to the threaded case, a strong glue or resin is introduced for the purpose of filling the gaps that may exist between the barrel and the solid element. Once the barrel is fixed to the solid element and the gaps are filled with the glue, the back end of the barrel is machined to obtain the ribs forming part of the fixing means for fixing the barrel to the bolt.

[0033] A quick and easy assembly and disassembly of the barrel and the receiver is thus achieved, said receiver being the part which houses virtually all the mechanisms of the rifle, i.e. a metal part which is assembled in the barrel with the preferred cooperation of the cotter pin, which is screwed to the receiver. To that end, the barrel fits into a channel existing for that purpose in the

solid element or monobloc. The attachment between the receiver and the barrel is strengthened by means of the screws, such that by simply loosening said screws the barrel is easily separated from the receiver, which then enables separating the barrel from the bolt.

[0034] It is also contemplated that the rifle comprises a handguard, an element also known as a crossguard or crosstree, attached to the barrel by means of a pin threaded into the solid element and substantially extending parallel to the barrel, the pin having a substantially conical surface which is introduced in a clip in which the pin is held by means of a screw.

[0035] The handguard, also referred to as crosstree or crossguard, is located in the distal part of the rifle, i.e. in the part corresponding to the barrel, which is not fixed or fastened to the barrel, but rather is fixed to the solid element or monobloc by means of a pin which, at its end part, has a conical area configured to receive the action of a screw which is contained in the clip, which is in turn firmly fastened to the handguard.

[0036] It is contemplated as a possibility that the rifle comprises at least one lever pivotable about an axis, being said lever coupled to the bolt for its operation, such that when the lever pivots in a first direction, said lever moves the bolt towards the loading position, and when the lever pivots in un second direction opposite to the first direction, the lever moves the bolt towards the firing position.

[0037] For the purpose of allowing the unlocking and the locking of the bolt, the rifle comprises a lever configured to rotate with regard to an axis.

[0038] The lever has a latch that swings on an axis for its unlocking and its fixing, or immobilization, said latch being configured to engage in a pin fixed to the receiver for fixing the lever. To provide sufficient locking strength to this mechanism, the latch has a spring which at one end is fixed to the lever by means of a pin. In addition, the run of said latch is limited by another pin.

[0039] It is contemplated that the lever is coupled to the bolt by means of an attachment element pivotably coupled to the bolt and also pivotably coupled to the lever.

[0040] The lever is hingably connected to the bolt by means of an attachment element, which can consist of a chain or connecting rod, having two axes, on one hand an axis hinged to the bolt and on the other hand an axis hinged to the lever.

[0041] It is additionally contemplated that the lever is associated to an extractor configured for extracting the cartridge cases, such that when said lever pivots in said first direction, said lever makes said extractor slide backwards, so that it causes the extraction of a cartridge case.

[0042] According to a preferred embodiment, the lever is associated to said extractor by means of a pivotable arm, or extraction lever, meshing with the extractor and configured such that it follows the movement of the lever during at least part of the run of the lever between the loading position and the firing position of the bolt.

[0043] The pivotable arm is useful to transmit the movement of the lever to the extractor, such that the pivotable movement of the lever is converted into a linear movement of the extractor during part of the run of the lever.

[0044] In addition to the function of unlocking the bolt, the lever thus has other additional functions. The first of said additional functions consists of producing or causing the ejection or extraction of the fired ammunition cartridge cases from the chamber of the barrel. To that end, the lever has a bushing concentric to its axis configured to allow the rotation of the pivotable arm, also referred to as extraction lever, which is in turn configured to convert the rotational movement of the lever into a translational or sliding movement of the extractor.

[0045] The extraction system comprises a linear extractor located under the chamber of the rifle, said extractor being configured to mesh with the pivotable arm, in the same way a rack and pinion mechanism meshes.

[0046] When the user acts by lowering the unlocking lever, during the first part of its run it does not act on the pivotable arm. Then, when the bolt is located in a low enough position to allow the extraction, the contact or meshing between the lever and the pivotable arm occurs, which occurs by means of a small tooth said lever and said pivotable arm have such that they begin to rotate attached to one another.

[0047] The lever houses a part which, at the same time as that which is described above, receives the action or thrust of the spring, such that said part penetrates a small cavity located under the pivotable arm, achieving that the lever and the pivotable arm are temporarily attached or connected.

[0048] The rotational movement of the pivotable arm acts by making the extractor slide backwards, causing the extraction of the used ammunition metal casing or cartridge case which is housed in the barrel.

[0049] To relock the bolt and bring in the extractor, the user must simply lock the lever which is integral to the pivotable arm by means of the previously described part, which part pushes the extractor, and therefore the ammunition, inwardly.

[0050] Once the extractor reaches a stop position, if the lever continues to be rotated the temporary connection or attachment between the lever and the pivotable arm becomes undone, which the user can easily notice in the form of a small click or slight resistance to rotation. Then to completely lock the rifle, the user continues to rotate the lever until the bolt and the lever are completely locked.

[0051] The possibility that the extractor is provided with a cartridge case extraction pin is contemplated, which pin is housed in said extractor and is pressed on by a spring, said pin being configured to slide in a groove in the barrel during at least part of the run of the extractor, and to mesh with a used cartridge case for its extraction from the chamber.

[0052] The back part of the extractor has a pin acted or pressed on by the spring, engaging in an extraction

groove of the back part of the used ammunition cartridge case.

[0053] According to a preferred embodiment of the invention, the rifle comprises a sear element pushed by a sear spring towards a position in which it engages a trigger, as well as a safety element that can travel between a position in which it prevents the firing of the rifle and another position in which it does not prevent the firing of the rifle, the safety element being drawn towards the position in which it prevents the firing of the rifle by a safety spring, the safety element and the sear element being arranged such that when the bolt travels towards the loading position, the sear element pushed by the sear spring is moved, allowing the safety element to travel to the position in which it prevents the firing of the rifle.

[0054] A second additional function of the lever is to automatically cock, activate or load the percussion means or system. To that end, when the bolt drops down, the sear element moves and drops down, acted on or driven by the sear spring. As a direct result of the foregoing, the safety element is released and automatically flies out backwards due to the effect or the actuation of the safety spring, the action of which is opposite to the action of the sear spring, such that the rifle is in a safety or locked position.

[0055] The safety element, which can consist of a knurled lever, is located on the receiver of the rifle in an easy access position for the thumb of the hand the user is firing with, enabling ambidextrous use.

[0056] Said safety element is configured to be placed, or activated, and removed, or deactivated, by the user, having the particularity that said safety element is always automatically located in the active position when the bolt is unlocked to load or unload the weapon, preventing in said active safety position the firing of the rifle.

[0057] For the rifle to meet optimal conditions, it is necessary to arrange said safety element, since the rifle automatically charges the hammer when the lever moves up. To that end, the safety element has a safety spring which pulls on said safety element as soon as the sear element is released from the hammer, i.e. when the lever is lowered. Therefore, when said lever moves up, for the purpose of compressing the percussion spring, the safety element is already acting, i.e. it is already activated. In short, in order to fire it is always necessary for the user to voluntarily remove the safety, placing it in the inactive position.

[0058] According to a preferred embodiment, the rifle comprises a highly sensitive trigger provided with dual-regulation. To that end, the trigger has, in its lower part, an adjusting screw which, by means of tightening it, achieves that the trigger recoils, therefore the engagement of the upper area with the sear element is reduced, and therefore the trigger is attenuated.

[0059] Once the firing has been performed, the rifle has the end stop adjusting screw, which runs inside the trigger spring, which decreases or reduces the run of the trigger by means of tightening it.

[0060] It is also contemplated that the sear element is arranged such that when the bolt travels towards its loading position, the sear element engages with the trigger.

[0061] The possibility that the rifle comprises a hammer configured to strike the firing pin when the trigger is squeezed with the safety element in the position in which it does not prevent the firing of the rifle is contemplated, the hammer being pivotably attached to the bolt such that it travels with the bolt when the bolt travels between the firing position and the loading position.

[0062] When the sear element drops down, it contacts or engages with the trigger. When the bolt is raised, the hammer contained in said bolt is retained by the sear element, the rifled being in a cocked position.

[0063] The hammer is located inside the bolt and is configured to strike the firing pin, such that said firing pin in turn acts on an ammunition percussion cap causing its detonation.

[0064] The possibility that the hammer is linked to the sear element such that is retained by the sear element when the bolt travels from the loading position towards the firing position is contemplated, such that when the bolt reaches the firing position, the hammer is cocked to be fired towards the firing pin.

[0065] The single-shot rifle described above can also comprise a fire protection element, associated to the bolt and configured to impede a possible backfire from injuring the user.

[0066] The bolt is locked with the fire protection element, also referred to as a safety deflector, which consists of a steel part which is fastened to the bolt by a screw. The lower part of the bolt has the hammer, which is configured to rotate with regard to a hammer axis and be acted on by a main spring.

[0067] Occasionally, as a result of ammunition defects or overlapping, the firing pin perforates the primer when firing, causing a high-pressure backfire towards the shooter through the firing pin passage, specifically towards the shooter's face and eyes, with the subsequent risk of a serious accident that this entails.

[0068] For the purpose of increasing the safety of the rifle, by means of eliminating the effect described in the preceding paragraph, the rifle can comprise a fire protection element, i.e. a safety deflector consisting of a steel part firmly fastened to the bolt, said fire protection element being configured to deflect the backfire occurring when firing towards inner areas, with lower exhaust, of the receiver, making said bolt lose pressure and thus preventing the previously discussed accidents.

[0069] The fire protection element can comprise a deflection surface, configured to deflect sparks into the receiver, preventing them from reaching the user's eyes. Said deflection surface is preferably configured such that it forms, in the vertical plane traversing the barrel when the rifle is in a conventional use position, an angle of approximately 45 degrees with the longitudinal direction in which the barrel extends.

[0070] To that end the fire protection element compris-

es an inclined plane, preferably occupying a 45° inclination when the rifle is in a firing position, which is located opposite to the passage of the firing pin, such that by means of this arrangement the sparks bounce off and are guided downwards, avoiding striking the face of the user of the rifle.

[0071] Therefore, according to the described invention, the single-shot rifle proposed by the invention is an advance in rifles used up until now, and it solves in a fully satisfactory manner the drawbacks set forth above insofar as it allows carrying out in a simple manner the disassembly and assembly operations of the barrel and the bolt, all this with a rifle that does not transmit stress to the receiver, considerably increasing shot precision.

DESCRIPTION OF THE DRAWINGS

[0072] To complement the description being made and for the purpose of aiding to better understand the features of the invention according to a preferred practical embodiment thereof, a set of drawings is attached as an integral part of said description which, with an illustrative and non-limiting character, show the following:

Figure 1 shows an exploded plan view of the rifle proposed by the invention.

Figure 2 shows a longitudinal section of the action mechanism of the rifle in the position at the moment of firing, in which the flow of gases in the area corresponding to the fire protection element has been shown with arrows.

Figure 3 shows a detail of the previous figure corresponding to the lever and the pivotable arm.

Figure 4 shows a longitudinal section of the action mechanism of the rifle in a first extraction position.

Figure 5 shows a detail of the previous figure corresponding to the lever and the pivotable arm.

Figure 6 shows a longitudinal section of the action mechanism of the rifle in a second extraction position.

Figure 7 shows un detail of the previous figure corresponding to the lever and the pivotable arm.

Figure 8 shows a longitudinal section of the action mechanism of the rifle in an assembled position in which the safety is active.

Figure 9 shows a section like that of the previous figure in the same position, in which the safety is inactive.

Figure 10 shows a longitudinal section of the rifle, in which the front binding system can be seen.

Figure 11 shows a partial perspective view of the barrel and the bolt according to an embodiment in which the barrel has a fixing rib and the bolt has a channel to house said rib of the barrel.

Figure 12 shows a partial perspective view of the barrel and the bolt according to an embodiment in which the barrel has two fixing ribs and the bolt has two channels.

Figure 13 shows two perspective views A and B in which the barrel and the bolt can be seen in an assembly position and in a disassembly position respectively.

Figure 14 shows a plan view, from a zenithal point of view, of the area corresponding to the action mechanisms of the rifle, in which the connection between the bolt and the barrel can be seen.

Figure 15 shows two elevational views of an assembly sequence between the barrel and the solid element or monobloc, the solid element being sectioned in view A so as to better see the introduction sequence, whereas in view B said elements are shown in the coupling or assembly situation, the position being limited by a recess in the barrel.

PREFERRED EMBODIMENT OF THE INVENTION

[0073] In view of the discussed figures, it can be seen how in one of the possible embodiments of the invention, the single-shot rifle proposed by the invention comprises a receiver (1) and a longitudinally extending barrel (6) and having a front end and a back end, said barrel (6) being attached to the receiver (1).

[0074] In addition, the rifle comprises a bolt (8) housing a firing pin (24), the bolt (8) being located in correspondence with the back end of the barrel (6).

[0075] According to the invention, the bolt (8) and the back end of the barrel (6) are configured such that the bolt (8) can be coupled to the back end of the barrel (6) by means of a sliding movement in a direction substantially perpendicular to the longitudinal direction, such that the bolt (8) can travel, by means of said sliding movement, between a loading position in which it leaves the back end of the barrel (6) clear such that a user can insert a cartridge in a chamber of the barrel (6) through said back end of the barrel (6), and a firing position in which said chamber is locked by said bolt (8), the barrel (6) and the bolt (8) being attached by means of at least one rib (61) entering at least one channel (81), such that said sliding movement is enabled and such that the bolt (8) is prevented from traveling backwards with regard to the back end of the barrel (6).

[0076] The central supporting element of the rifle is the receiver (1), on which the barrel (6) is borne, supported or held by means of a cotter pin (25) fastened with a screw (35). This arrangement also allows fixing the end part of the barrel (6), as can be seen in any of Figures 2 to 10.

[0077] Said figures show a preferred embodiment of the rifle of the invention, in which the fixing means comprising said cotter pin (25), for the purpose of assuring that the position of the barrel (6) with regard to the receiver (1) is always the same, also obtaining precise sliding between the bolt (8) and the barrel (6), can be seen.

[0078] Located adjacent to the barrel (6) is the bolt (8), inside which the firing pin (24), which is operated by a spring (27), is housed, in a back area of the bolt (8), i.e.

in an area opposite to the barrel (6).

[0079] The stock (3) is located in the back part of the rifle, behind the receiver (1), and it can have a wide variety of configurations and materials, which can be changed and combined with the rest of the elements of the rifle by means of connecting them to the receiver (1), for example, by means of a clamping screw (55).

[0080] The locking means, or locking system, of the rifle of the invention are depicted in Figures 11 and 12. The bolt (8) of the rifle proposed by the invention has at least one channel (81) configured to slide on the actual barrel (6), said bolt (8) being firmly fastened to the barrel (6).

Figure 12 shows an embodiment variant in which the locking system has two more rows of engaging channels (81) and ribs (61).

Figure 11 shows a preferred embodiment comprising a rib (61) located in the back end of the barrel (6) and a channel (81) located in the bolt (8) and configured to receive said rib (61), such that with said rib (61) housed in said channel (81) the bolt (8) is attached to the barrel (6) such that it cannot travel backwards with regard to the barrel (6), but such that it can travel in a direction substantially perpendicular to the barrel (6), by means of sliding said rib (61) in said channel (81).

[0081] Said rib (61) also extends around at least part of the circumference of the barrel (6), in correspondence with the back end of the barrel (6).

[0082] In correspondence with its back end, the barrel (6) is provided with a solid element (7), also referred to as monobloc, for fixing the barrel (6) to the receiver (1).

[0083] As can be seen in views A and B of Figure 15, the barrel (6) is configured to be frontally introduced in the solid element (7). In the end close to the receiver (1), the barrel (6) comprises a flange (82), close to the rib (61), used as a stop limiting the forward exit of the barrel (6) with regard to the solid element (7).

[0084] Once the barrel (6) is introduced in the solid element (7), glue or resin is introduced for the purpose of filling the gaps that may exist between the barrel (6) and the solid element (7).

[0085] Said solid element (7) preferably has holes for the attachment between the barrel (6) and the receiver (1) by means of screws (33), which are threaded in said holes.

[0086] A quick and easy assembly and disassembly of the barrel (6) and the receiver (1) is thus obtained, said receiver (1) being the part housing virtually all the mechanisms of the rifle, i.e. a metal part assembled in the barrel (6) with the preferred cooperation of the cotter pin (25), which is screwed to the receiver (1). To that end the barrel (6) fits into a channel existing for that purpose in the solid element (7). The attachment between the receiver (1) and the barrel (6) is strengthened by means of the screws (33), such that by simply loosening said screws (33) the barrel (6) is easily separated from the receiver (1), which allows then separating the barrel (6) from the bolt (8).

[0087] The rifle comprises a handguard (2) attached to the barrel (6) by means of a pin (21) threaded in the solid element (7) and substantially extending parallel to the barrel (6), the pin (21) having a substantially conical surface which is introduced in a clip (22) in which the pin (21) is held by means of a screw (53).

[0088] As can be seen in Figure 10, the handguard (2), also referred to as crosstree or crossguard, is located in the distal part of the rifle, i.e. in the part corresponding to the barrel (6), which is not fixed or fastened to the barrel (6), but rather is fixed to the solid element (7) by means of a pin (21) which, at its end part, has a conical area configured to receive the action of a screw (53) which is contained in the clip (22), which is in turn firmly fastened to the handguard (2).

[0089] The rifle comprises a lever (10) pivotable about an axis (38), said lever (10) being coupled to the bolt (8) for its operation, such that when the lever (10) pivots in a first direction, said lever (10) moves the bolt (8) towards the loading position, and when the lever (10) pivots in a second direction opposite to the first direction, the lever (10) moves the bolt (8) towards the firing position.

[0090] The lever (10) has a latch (11) that swings on an axis (39) for its unlocking and its fixing, or immobilization, said latch (11) being configured to engage in a pin (45) fixed to the receiver (1) for fixing the lever (10). To provide sufficient locking strength to this mechanism, the latch (11) has a spring (31) which at one end is fixed to the lever (10) by means of a pin (40). In addition, the run of said latch (11) is limited by another pin (52), as has been shown, for example, in Figure 4.

[0091] The lever (10) is coupled to the bolt (8) by means of an attachment element (19) pivotably coupled to the bolt (8) and also pivotably coupled to the lever (10).

[0092] The lever (10) is hingably connected to the bolt (8) by means of an attachment element (19), consisting of a chain or connecting rod having two axes, on one hand an axis (36) hinged to the bolt (8) and on the other hand an axis (37) hinged to the lever (10).

[0093] In addition, the lever (10) is associated to an extractor (17) configured for extracting the cartridge cases, such that when said lever (10) pivots in said first direction, said lever (10) makes said extractor slide backwards (17), so that it causes the extraction of a cartridge case.

[0094] According to a preferred embodiment, the lever (10) is associated to said extractor (17) by means-of a pivotable arm (20), or extraction lever, engaging with the extractor (17) and being configured such that it follows the movement of the lever (10) during at least part of the run of the lever (10) between the loading position and the firing position of the bolt (8).

[0095] The pivotable arm (20) is useful to transmit the movement of the lever (10) to the extractor (17), such that the pivotable movement of the lever (10) is converted

into a linear movement of the extractor (17), during part of the run of the lever (10)

[0096] In addition to the function of unlocking the bolt (8), the lever (10) thus has other additional functions. The first of said additional functions consists of producing or causing the ejection or extraction of the fired ammunition cartridge cases from the chamber of the barrel (6). To that end, the lever (10) has a bushing (23) concentric to its axis (38) configured to allow the rotation of the pivotable arm (20), also referred to as extraction lever, which is in turn configured to convert the rotational movement of the lever (10) into a translational or sliding movement of the extractor (17).

[0097] The extraction system comprises a linear extractor (17) located under the chamber of the rifle, said extractor (17) being configured to mesh with the pivotable arm (20), in the same way a rack and pinion mechanism meshes.

[0098] When the user acts by lowering the unlocking lever (10), during the first part of its run it does not act on the pivotable arm (20). Then, when the bolt (8) is located in a low enough position to allow the extraction, the contact or meshing between the lever (10) and the pivotable arm (20) occurs by means of a small tooth said lever (10) and said pivotable arm (20) have such that they begin to rotate attached to one another.

[0099] The lever (10) houses a part (58) which, at the same time as that which is described above, receives the action or thrust of the spring (57), such that said part (58) penetrates a small cavity located under the pivotable arm (20), achieving that the lever (10) and the pivotable arm (20) are temporarily attached or connected.

[0100] The rotational movement of the pivotable arm (20) acts by making the extractor (17) slide backwards, causing the extraction of the used ammunition metal casing or cartridge case which is housed in the barrel (6).

[0101] To relock the bolt (8) and bring in the extractor (17), the user must simply lock the lever (10) which is integral to the pivotable arm (20) by means of the previously described part (58), which part (58) pushes the extractor (17), and therefore the ammunition, inwardly.

[0102] Once the extractor (17) reaches a stop position, if the lever continues to be rotated (10) the temporary connection or attachment between the lever (10) and the pivotable arm (20) becomes undone, which the user can easily notice in the form of a small click or slight resistance to rotation. Then to completely lock the rifle, the user continues to rotate the lever (10) until the bolt (8) and the lever (10) are completely locked, as shown in Figures 2 to 7.

[0103] In addition, the extractor (17) is provided with a cartridge case extraction pin (18), which is housed in said extractor (17) and is pressed on by a spring (56), said pin (18) being configured to slide in a groove in the barrel (6) during at least part of the run of the extractor (17) and to mesh with a used cartridge case for its extraction from the chamber.

[0104] As can be seen in Figure 6, the back part of said extractor (17) has a pin (18) acted or pressed on by the spring (56), engaging in an extraction groove of the back part of the used ammunition cartridge case.

[0105] According to a preferred embodiment of the invention, the rifle comprises a sear element (13) pushed by a sear spring (30) towards a position in which it engages a trigger (14), as well as a safety element (16) that can travel between a position in which it prevents the firing of the rifle and another position in which it does not prevent the firing of the rifle, the safety element (16) being drawn towards the position in which it prevents the firing of the rifle by a safety spring (26), the safety element (16) and the sear element (13) being arranged such that when the bolt (8) travels towards the loading position, the sear element (13) pushed by the sear spring (30) is moved, is moved, allowing the safety element (16) to travel to the position in which it prevents the firing of the rifle.

[0106] A second additional function of the lever (10) is to automatically cock, activate or load the percussion means or system. To that end, when the bolt (8) drops down, the sear element (13) moves and drops down, acted on or driven by the sear spring (30). As a direct result of the foregoing, the safety element (16) is released and automatically flies out backwards due to the effect or the actuation of the safety spring (26), the action of which is opposite to the action of the sear spring (30), such that the rifle is in a safety or locked position, position which is shown in Figure 8.

[0107] The safety element (16) is located on the receiver (1) of the rifle in an easy access position for the thumb of the hand the user is firing with, enabling ambidextrous use.

[0108] Said safety element (16) is configured to be placed, or activated, and removed, or deactivated, by the user, having the particularity that said safety element (16) is always automatically located in the active position when the bolt (8) is unlocked to load or unload the weapon, preventing in said active safety position the firing of the rifle.

[0109] For the rifle to meet optimal conditions, it is necessary to arrange said safety element (16), since the rifle automatically charges the hammer (12) when the lever (10) moves up. To that end, the safety element (16) has a safety spring (26) which pulls on said safety element (16) as soon as the sear element (13) is released from the hammer (12), i.e. when the lever (10) is lowered. Therefore, when said lever (10) moves up for the purpose of compressing the percussion spring (27), the safety element (16) is already acting, i.e. it is already activated, as can be seen in Figures 6 and 8. In short, in order to fire it is always necessary for the user to voluntarily remove the safety, placing it in the inactive position, as shown in Figures 9 and 2.

[0110] According to a preferred embodiment, the rifle comprises a highly sensitive trigger (14) provided with dual-regulation. To that end, the lower part of the trigger (14) has an adjusting screw (50) which, by means of tightening it, achieves that the trigger (14) recoils, therefore

the engagement of the upper area with the sear element (13) is reduced, and therefore the trigger is attenuated.

[0111] Once the firing has been performed, the rifle has the end stop adjusting screw (59), which runs inside the trigger spring, which decreases or reduces the run of the trigger (14) by means of tightening it.

[0112] Likewise, the sear element (13) is arranged such that when the bolt (8) travels towards its loading position, the sear element (13) engages with the trigger (14).

[0113] The rifle comprises a hammer (12) configured to strike the firing pin (24) when the trigger (14) is squeezed with the safety element (16) in the position in which it does not prevent the firing of the rifle, the hammer (12) being pivotably attached to the bolt (8) such that it travels with the bolt (8) when the bolt (8) travels between the firing position and the loading position.

[0114] When the sear element (13) drops down, it contacts or engages with the trigger (14). When the bolt (8) is raised, the hammer (12) contained in said bolt (8) is retained by the sear element (13), the rifled being in a cocked position, which is shown in Figure 9.

[0115] The hammer (12) is located inside the bolt (8) and is configured to strike the firing pin (24), such that said firing pin (24) in turn acts on an ammunition percussion cap causing its detonation.

[0116] The hammer (12) is linked to the sear element (13) such that is retained by the sear element (13) when the bolt (8) travels from the loading position towards the firing position, such that when the bolt (8) reaches the firing position, the hammer (12) is cocked to be fired towards the firing pin (24).

[0117] The single-shot rifle also comprises a fire protection element (9) associated to the bolt (8) and configured to deflect sparks coming out backwards at the moment of firing.

[0118] The bolt (8) is locked with the fire protection element (9), also referred to as safety deflector, consisting of a steel part which is fastened to the bolt (8) by a screw (34). The bolt (8) internally has the hammer (12) which is configured to rotate with regard to an axis (51) of hammer (12) and to be actuated by a main spring (28) as can be seen, for example, in Figure 2.

[0119] Occasionally, as a result of ammunition defects or overlapping, the firing pin (24) perforates the primer when firing, causing a high-pressure backfire towards the shooter through the firing pin passage, specifically towards the shooter's face and eyes, with the subsequent risk of a serious accident that this entails.

[0120] For the purpose of increasing the safety of the rifle, by means of eliminating the effect described in the preceding paragraph, the rifle comprises a fire protection element (9), i.e. a safety deflector consisting of a steel part firmly fastened to the bolt (8), said fire protection element (9) being configured to deflect the backfire occurring when firing towards inner areas, with lower exhaust, of the receiver (1), making said bolt (8) lose pressure and thus preventing the previously discussed accidents.

[0121] According to a preferred embodiment of the invention, the fire protection element (9) comprises a deflection surface, configured to deflect sparks towards the inside of the receiver (1), preventing them from reaching the user's eyes. Said deflection surface is preferably configured such that it forms, in the vertical plane traversing the barrel (6) when the rifle is in a conventional use position, an angle of approximately 45 degrees with the longitudinal direction in which the barrel (6) extends.

[0122] To that end, as can be seen in Figures 2 and 9, for example, the fire protection element (9) comprises an inclined plane, preferably occupying a 45° inclination when the rifle is in a firing position, which is located opposite to the passage of the firing pin (24), such that by means of this arrangement the sparks bounce off and are guided downwards, avoiding striking the face of the user of the rifle.

[0123] In view of this description and set of drawings, a person skilled in the art may understand that the embodiments of the invention that have been described can be combined in many ways within the object of the invention. The invention has been described according to several preferred embodiments thereof, but it will be obvious for a person skilled in the art that many variations can be introduced in said preferred embodiments without exceeding the object as defined in the appended claims.

Claims

1. A single-shot rifle, comprising:

a receiver (1);

a longitudinally extending barrel (6) and having a front end and a back end, the barrel (6) being attached to the receiver (1);

a bolt (8) housing a firing pin (24), the bolt (8) being located in correspondence with the back end of the barrel (6);

wherein

the bolt (8) and the back end of the barrel (6) are configured such that the bolt (8) can be coupled to the back end of the barrel (6) by means of a sliding movement in a direction substantially perpendicular to the longitudinal direction, such that the bolt (8) can travel, by means of said sliding movement, between a loading position in which it leaves the back end of the barrel (6) clear such that a user can insert a cartridge in a chamber of the barrel (6) through said back end of the barrel (6), and a firing position in which said chamber is locked by said bolt (8), the barrel (6) and the bolt (8) being attached by means of at least one rib (61) entering in at least one channel (81), such that said sliding movement is enabled and such that the bolt (8) is prevented from traveling backwards with regard to the back end

of the barrel (6);
wherein
the barrel (6), in correspondence with its back end, is provided with a solid element (7) for fixing the barrel (6) to the receiver (1),
and wherein the barrel (6), in correspondence with its back end, comprises at least one flange (82), configured to be used as a stop limiting the position of the solid element (7), said barrel (6) being configured to be frontally introduced in said solid element (7).

2. A single-shot rifle according to claim 1, wherein said at least one rib (61) comprises at least one rib (61) located in the back end of the barrel (6), and wherein said at least one channel (81) comprises at least one channel (81) located in the bolt (8) and configured to receive said at least one rib (61), such that with said at least one rib (61) housed in said at least one channel (81) the bolt (8) is attached to the barrel (6) such that it cannot travel backwards with regard to the barrel (6), but such that it can travel in a direction substantially perpendicular to to the barrel (6), by means of sliding said at least one rib (61) in said at least one channel (81).

3. A single-shot rifle according to claim 1 or 2, wherein said at least one rib (61) comprises at least two ribs (61), and wherein said at least one channel (81) comprises at least two channels (81).

4. A single-shot rifle according to any of the previous claims, wherein said at least one rib (61) extends around at least part of the circumference of the barrel (6), in correspondence with the back end of the barrel (6).

5. A single-shot rifle according to any of the previous claims, wherein the solid element (7) has holes for the attachment between the barrel (6) and the receiver (1) by means of screws (33) which are threaded in said holes.

6. A single-shot rifle according to any of the previous claims, additionally comprising a handguard (2) attached to the barrel (6) by means of a pin (21) threaded in the solid element (7) and substantially extending parallel to the barrel (6), the pin (21) having a substantially conical surface which is introduced in a clip (22) in which the pin (21) is held by means of a screw (53).

7. A single-shot rifle according to any of the previous claims, additionally comprising at least one lever (10) pivotable about an axis (38), said lever (10) being coupled to the bolt (8) such that when the lever (10) pivots in a first direction, said lever (10) moves the bolt (8) towards the loading position, and when the lever (10) pivots in a second direction opposite to the first direction, the lever (10) moves the bolt (8) towards the firing position.

8. A single-shot rifle according to claim 7, wherein said lever (10) is coupled to the bolt (8) by means of an attachment element (19) pivotably coupled to the bolt (8) and also pivotably coupled to the lever (10).

9. A single-shot rifle according to any of claims 7-8, wherein said lever (10) is associated to an extractor (17) configured for extracting the cartridge cases, such that when said lever (10) pivots in said first direction, said lever (10) makes said extractor (17) slide backwards so that it causes the extraction of a cartridge case.

10. A single-shot rifle according to claim 9, wherein said lever (10) is associated to said extractor (17) by means of a pivotable arm (20) meshing with the extractor (17) and being configured such that it follows the movement of the lever (10) during at least part of the run of the lever (10) between the loading position and the firing position of the bolt (8).

11. A single-shot rifle according to any of claims 9 and 10, wherein the extractor (17) is provided with a pin (18) pressed on by a spring (56), said pin (18) being configured to slide in a groove in the barrel (6) during at least part of the run of the extractor (17), and to mesh with a used cartridge case for its extraction from the chamber.

12. A single-shot rifle according to any of the previous claims, further comprising a sear element (13) pushed by a sear spring (30) towards a position in which it engages a trigger (14), as well as a safety element (16) that can travel between a position in which it prevents the firing of the rifle and another position in which it does not prevent the firing of the rifle, the safety element (16) being drawn towards the position in which it prevents the firing of the rifle by a safety spring (26), the safety element (16) and the sear element (13) being arranged such that when the bolt (8) travels towards the loading position, the sear element (13) pushed by the sear spring (30) travels, allowing the safety element (16) to travel to the position in which it prevents the firing of the rifle.

13. A single-shot rifle according to claim 12, wherein the sear element (13) is arranged such that when the bolt (8) travels towards its loading position, the sear element (13) engages with the trigger (14).

14. A single-shot rifle according to claim 13, additionally comprising a hammer (12) configured to strike the firing pin (24) when the trigger (14) is squeezed with the safety element (16) in the position in which it

does not prevent the firing of the rifle, the hammer (12) being pivotably attached to the bolt (8) such that it travels with the bolt (8) when the bolt (8) travels between the firing position and the loading position.

15. A single-shot rifle according to claim 14, wherein the hammer (12) is connected to the sear element (13) such that is retained by the sear element (13) when the bolt (8) travels from the loading position towards the firing position, such that when the bolt (8) reaches the firing position, the hammer (12) is cocked to be fired towards the firing pin (24).

16. A single-shot rifle according to any of the previous claims, additionally comprising a fire protection element (9) associated to the bolt (8) and configured to deflect sparks coming out backwards at the moment of firing.

17. A single-shot rifle according to claim 16, wherein said fire protection element (9) comprises a deflection surface configured to deflect sparks towards the inside of the receiver (1), preventing them from reaching the user's eyes.

18. A single-shot rifle according to claim 17, said deflection surface being configured such that it forms, in the vertical plane traversing the barrel (6) when the rifle is in a conventional use position, an angle of approximately 45 degrees with the longitudinal direction in which the barrel extends (6).

Patentansprüche

1. Einschüssiges Gewehr, enthaltend:

ein Gehäuse (1) ;
einen in Längsrichtung verlaufenden Lauf (6), der ein vorderes Ende und ein hinteres Ende hat, welcher Lauf (6) an dem Gehäuse (1) angebracht ist;
einen Verschluss (8), in welchem ein Schlagbolzen (24) untergebracht ist, wobei der Verschluss (8) in Übereinstimmung mit dem hinteren Ende des Laufes (6) angeordnet ist;
wobei der Verschluss (8) und das hintere Ende des Laufes (6) so konfiguriert sind, dass der Verschluss (8) mit dem hinteren Ende des Laufes (6) mittels einer Schiebebewegung in einer im wesentlichen zu der Längsrichtung senkrechten Richtung gekoppelt werden kann, so dass der Verschluss (8) mittels der Schiebebewegung zwischen einer Ladeposition, in welcher er das hintere Ende des Laufes (6) frei lässt, so dass ein Benutzer eine Patrone in eine Kammer des Laufes (6) durch das hintere Ende des Laufes (6) einführen kann, und einer Feuerposition, in welcher die Kammer durch den Verschluss (8) verschlossen ist, verschoben werden kann, wobei der Lauf (6) und der Verschluss (8) mittels mindestens einer Rippe (61), welche in mindestens eine Nut (81) eintreten kann, befestigt werden, so dass die Schiebebewegung ermöglicht wird und so dass der Verschluss (8) daran gehindert wird, sich in Bezug auf das hintere Ende des Laufes (6) nach hinten zu bewegen;
wobei der Lauf (6) in Übereinstimmung mit seinem hinteren Ende mit einem festen Element (7) zur Befestigung des Laufes (6) an dem Gehäuse (1) versehen ist,
und wobei der Lauf (6) in Übereinstimmung mit seinem hinteren Ende mindestens einen Flansch (82) aufweist, der so konfiguriert ist, dass er als ein Anschlag verwendet wird, der die Position des festen Elements (7) begrenzt, welcher Lauf (6) dafür konfiguriert ist, von vorne in das feste Element (7) eingeführt zu werden.

2. Einschüssiges Gewehr nach Anspruch 1, bei welchem die mindestens eine Rippe (61) mindestens eine Rippe (61) umfasst, die in dem hinteren Ende des Laufes (6) angeordnet ist, und wobei die mindestens eine Nut (81) mindestens eine Nut (81) umfasst, die in dem Verschluss (8) angeordnet ist und dafür konfiguriert ist, die mindestens eine Rippe (61) aufzunehmen, so dass dann, wenn die mindestens eine Rippe (61) in der mindestens einen Nut (81) aufgenommen ist, der Verschluss (8) an dem Lauf (6) so angebracht ist, dass er sich in Bezug auf den Lauf (6) nicht nach hinten bewegen kann, jedoch so, dass er sich in einer zu dem Lauf (6) im wesentlichen senkrechten Richtung bewegen kann, indem die mindestens eine Rippe (61) in der mindestens einen Nut (81) verschoben wird.

3. Einschüssiges Gewehr nach Anspruch 1 oder 2, bei welchem die mindestens eine Rippe (61) mindestens zwei Rippen (61) umfasst und bei welchem die mindestens eine Nut (81) mindestens zwei Nuten (81) umfasst.

4. Einschüssiges Gewehr nach einem der vorstehenden Ansprüche, bei welchem die mindestens eine Rippe (61) um mindestens einen Teil des Umfangs des Laufes (6) in Übereinstimmung mit dem hinteren Ende des Laufes (6) verläuft.

5. Einschüssiges Gewehr nach einem der vorstehenden Ansprüche, bei welchem das feste Element (7) Löcher zur Befestigung zwischen dem Lauf (6) und dem Gehäuse (1) mittels Schrauben (33) hat, die in die Löcher eingeschraubt sind.

6. Einschüssiges Gewehr nach einem der vorstehenden Ansprüche, zusätzlich enthaltend einen Hand-

schutz (2), der an dem Lauf (6) mittels eines Stifts (21) angebracht ist, der in das feste Element (7) eingeschraubt ist und im wesentlichen parallel zu dem Lauf (6) verläuft, wobei der Stift (21) eine im wesentlichen konische Oberfläche hat, welche in eine Klammer (22) eingeführt wird, in welcher der Stift (21) mittels einer Schraube (53) gehalten wird.

7. Einschüssiges Gewehr nach einem der vorstehenden Ansprüche, zusätzlich enthaltend mindestens einen Hebel (10), der um eine Achse (38) schwenkbar ist, welcher Hebel (10) dergestalt mit dem Verschluss (8) gekoppelt ist, dass dann, wenn der Hebel (10) in einer ersten Richtung schwenkt, der Hebel (10) den Verschluss (8) in Richtung der Ladeposition bewegt, und dann, wenn der Hebel (10) in einer der ersten Richtung entgegengesetzten zweiten Richtung schwenkt, der Hebel (10) den Verschluss (8) in Richtung der Feuerposition bewegt.

8. Einschüssiges Gewehr nach Anspruch 7, bei welchem der Hebel (10) mit dem Verschluss (8) mittels eines Befestigungselements (19) gekoppelt ist, welches mit dem Verschluss (8) gelenkig verbunden ist und ebenfalls mit dem Hebel (10) gelenkig verbunden ist.

9. Einschüssiges Gewehr nach einem der Ansprüche 7-8, bei welchem der Hebel (10) mit einem Auszieher (17) verbunden ist, der zum Ausziehen der Patronenhülsen konfiguriert ist, so dass dann, wenn der Hebel (10) in die erste Richtung schwenkt, der Hebel (10) den Auszieher (17) nach hinten verschiebt, so dass er das Ausziehen einer Patronenhülse bewirkt.

10. Einschüssiges Gewehr nach Anspruch 9, bei welchem der Hebel (10) mit dem Auszieher (17) mittels eines Gelenkarms (20) verbunden ist, der mit dem Auszieher (17) in Eingriff steht und der so konfiguriert ist, dass er der Bewegung des Hebels (10) während mindestens eines Teils des Weges des Hebels (10) zwischen der Ladeposition und der Feuerposition des Verschlusses (8) folgt.

11. Einschüssiges Gewehr nach einem der Ansprüche 9 und 10, bei welchem der Auszieher (17) mit einem Stift (18) versehen ist, der durch eine Feder (56) beaufschlagt ist, welcher Stift (18) so konfiguriert ist, dass er während mindestens eines Teils des Weges des Ausziehers (17) in einer Nut des Laufes (6) gleitet und mit einer verbrauchten Patronenhülsen in Eingriff kommt, um diese aus der Kammer herauszuziehen.

12. Einschüssiges Gewehr nach einem der vorstehenden Ansprüche, ferner enthaltend ein Abzugselement (13), welches durch eine Abzugsfeder (30) in eine Position geschoben wird, in welcher es mit einem Abzugszüngel (14) in Eingriff ist, sowie ein Sicherungselement (16), welches zwischen einer Position, in welcher es das Abfeuern des Gewehrs verhindert, und einer anderen Position, in welcher es das Abfeuern des Gewehrs nicht verhindert, bewegbar ist, wobei das Sicherungselement (16) durch eine Sicherungsfeder (26) in die Position gezogen wird, in welcher es das Abfeuern des Gewehrs verhindert, wobei das Sicherungselement (16) und das Abzugselement (13) so angeordnet sind, dass dann, wenn der Verschluss (8) sich in die Ladeposition bewegt, das Abzugselement (13) sich von der Abzugsfeder (30) beaufschlagt verschiebt und es dem Sicherungselement (16) erlaubt, sich in die Position zu bewegen, in welcher es das Abfeuern des Gewehrs verhindert.

13. Einschüssiges Gewehr nach Anspruch 12, bei welchem das Abzugselement (13) so angeordnet ist, dass dann, wenn der Verschluss (8) sich in seine Ladeposition bewegt, das Abzugselement (13) mit dem Abzugszüngel (14) in Eingriff kommt.

14. Einschüssiges Gewehr nach Anspruch 13, zusätzlich enthaltend einen Hahn (12), der dafür konfiguriert ist, auf den Schlagbolzen (24) aufzuschlagen, wenn das Abzugszüngel (14) gezogen wird, wobei das Sicherungselement (16) in der Position ist, in der es das Abfeuern des Gewehrs nicht verhindert, welcher Hahn (12) an dem Verschluss (8) dergestalt schwenkbar befestigt ist, dass er mit dem Verschluss (8) verschoben wird, wenn der Verschluss (8) zwischen der Feuerposition und der Ladeposition verschoben wird.

15. Einschüssiges Gewehr nach Anspruch 14, bei welchem der Hahn (12) mit dem Abzugselement (13) dergestalt verbunden ist, dass er von dem Abzugselement (13) zurückgehalten wird, wenn der Verschluss (8) von der Ladeposition in die Feuerposition verschoben wird, so dass dann, wenn der Verschluss (8) die Feuerposition erreicht, der Hahn (12) gespannt ist, so dass er auf den Schlagbolzen (24) abgeschossen werden kann.

16. Einschüssiges Gewehr nach einem der vorstehenden Ansprüche, zusätzlich enthaltend ein Feuerschutzelement (9), welches mit dem Verschluss (8) verbunden ist und so konfiguriert ist, dass es im Moment des Abfeuerns nach hinten austretende Funken ablenkt.

17. Einschüssiges Gewehr nach Anspruch 16, bei welchem das Feuerschutzelement (9) eine Ablenkfläche aufweist, die so konfiguriert ist, dass sie Funken in das Innere des Gehäuses (1) ablenkt und verhindert, dass sie die Augen des Benutzers erreichen.

18. Einschüssiges Gewehr nach Anspruch 17, wobei die Ablenkfläche so konfiguriert ist, dass sie in einer in der gewöhnlichen Verwendungsposition des Gewehrs quer zum Lauf (6) verlaufenden vertikalen Ebene einen Winkel von annähernd 45° mit der Längsrichtung bildet, in welcher der Lauf (6) verläuft.

Revendications

1. Carabine à simple coup, comprenant :

une boîte de culasse (1),
un canon (6) s'étendant longitudinalement et ayant une extrémité avant et une extrémité arrière, le canon (6) étant fixé sur la boîte de culasse (1) ;
une culasse (8) logeant un percuteur (24), la culasse (8) étant positionnée en correspondance avec l'extrémité arrière du canon (6) ;
dans laquelle :

la culasse (8) et l'extrémité arrière du canon (6) sont configurées de sorte que la culasse (8) puisse être couplée à l'extrémité arrière du canon (6) au moyen d'un mouvement de coulissement dans une direction sensiblement perpendiculaire à la direction longitudinale, de sorte que la culasse (8) puisse se déplacer, au moyen dudit mouvement coulissant, entre une position de chargement dans laquelle elle quitte l'extrémité arrière du canon (6) de sorte qu'un utilisateur puisse insérer une cartouche dans une chambre du canon (6) par ladite extrémité arrière du canon (6), et une position de tir dans laquelle ladite chambre est bloquée par ladite culasse (8), le canon (6) et la culasse (8) étant fixés au moyen d'au moins d'une nervure (61) qui entre dans au moins un canal (81), de sorte que ledit mouvement de coulissement soit autorisé et de sorte que l'on empêche la culasse (8) de se déplacer vers l'arrière par rapport à l'extrémité arrière du canon (6) ;
dans laquelle :

le canon (6), en correspondance avec son extrémité arrière, est muni d'un élément solide (7) pour fixer le canon (6) sur la boîte de culasse (1), et dans laquelle le canon (6), en correspondance avec son extrémité arrière, comprend au moins un manche à air (82), configuré pour être utilisé en tant que butée pour limiter la position de l'élément solide (7), ledit canon (6) étant configuré pour être introduit de face dans ledit élément solide (7).

2. Carabine à simple coup selon la revendication 1, dans laquelle ladite au moins une nervure (61) comprend au moins une nervure (61) positionnée dans l'extrémité arrière du canon (6), et dans laquelle ledit au moins un canal (81) comprend au moins un canal (81) positionné dans la culasse (8) et configuré pour recevoir ladite au moins une nervure (61), de sorte qu'avec ladite au moins une nervure (61) logée dans ledit au moins un canal (81), la culasse (8) soit fixée sur le canon (6) de sorte qu'elle ne puisse pas reculer par rapport au canon (6), mais de sorte qu'elle puisse se déplacer dans une direction sensiblement perpendiculaire au canon (6), au moyen du coulissement de ladite au moins une nervure (61) dans ledit au moins un canal (81).

3. Carabine à simple coup selon la revendication 1 ou 2, dans laquelle ladite au moins une nervure (61) comprend au moins deux nervures (61) et dans laquelle ledit au moins un canal (81) comprend au moins deux canaux (81).

4. Carabine à simple coup selon l'une quelconque des revendications précédentes, dans laquelle ladite au moins une nervure (61) s'étend autour d'au moins une partie de la circonférence du canon (6) en correspondance avec l'extrémité arrière du canon (6).

5. Carabine à simple coup selon l'une quelconque des revendications précédentes, dans laquelle l'élément solide (7) a des trous pour la fixation entre le canon (6) et la boîte de culasse (1) au moyen de vis (33) qui sont vissées dans lesdits trous.

6. Carabine à simple coup selon l'une quelconque des revendications précédentes, comprenant de plus un protège-mains (2) fixé sur le canon (6) au moyen d'une broche (21) vissée dans l'élément solide (7) et s'étendant sensiblement parallèlement au canon (6), la broche (21) ayant une surface sensiblement conique qui est introduite dans un chargeur de magasin (22) dans laquelle la broche (21) est maintenue au moyen d'une vis (53).

7. Carabine à simple coup selon l'une quelconque des revendications précédentes, comprenant de plus au moins un levier (10) pouvant pivoter autour d'un axe (38), ledit levier (10) étant couplé à la culasse (8) de sorte que lorsque le levier (10) pivote dans une première direction, ledit levier (10) déplace la culasse (8) vers la position de chargement, et lorsque le levier (10) pivote dans une seconde direction opposée à la première direction, le levier (10) déplace la culasse (8) vers la position de tir.

8. Carabine à simple coup selon la revendication 7, dans laquelle ledit levier (10) est couplé à la culasse (8) au moyen d'un élément de fixation (19) couplé

de manière pivotante à la culasse (8) et également couplé de manière pivotante au levier (10).

9. Carabine à simple coup selon l'une quelconque des revendications 7 à 8, dans laquelle ledit levier (10) est associé à un extracteur (17) configuré pour extraire les douilles, de sorte que lorsque ledit levier (10) pivote dans ladite première direction, ledit levier (10) fasse coulisser ledit extracteur (17) vers l'arrière de sorte qu'il provoque l'extraction d'une douille.

10. Carabine à simple coup selon la revendication 9, dans laquelle ledit levier (10) est associé audit extracteur (17) au moyen d'un bras pivotant (20) s'engrenant avec l'extracteur (17) et étant configuré de sorte qu'il suive le mouvement du levier (10) pendant au moins une partie de la course du levier (10) entre la position de chargement et la position de tir de la culasse (8).

11. Carabine à simple coup selon l'une quelconque des revendications 9 et 10, dans laquelle l'extracteur (17) est muni d'une broche (18) comprimée par un ressort (56), ladite broche (18) étant configurée pour coulisser dans une rainure dans le canon (6) pendant au moins une partie de la course de l'extracteur (17) et pour s'engrener avec une douille usagée pour son extraction de la chambre.

12. Carabine à simple coup selon l'une quelconque des revendications précédentes, comprenant en outre un élément formant levier d'armement (13) poussé par un ressort de levier d'armement (30) vers une position dans laquelle il met en prise une gâchette (14) ainsi qu'un élément de sécurité (16) qui peut se déplacer entre une position dans laquelle il empêche le tir de la carabine et une autre position dans laquelle il n'empêche pas le tir de la carabine, l'élément de sécurité (16) étant tiré vers la position dans laquelle il empêche le tir de la carabine par un ressort de sécurité (26), l'élément de sécurité (16) et l'élément formant levier d'armement (13) étant agencés de sorte que lorsque la culasse (8) se déplace vers la position de chargement, l'élément formant levier d'armement (13) poussé par le ressort de levier d'armement (30) se déplace, permettant à l'élément de sécurité (16) de se déplacer vers la position dans laquelle il empêche le tir de la carabine.

13. Carabine à simple coup selon la revendication 12, dans laquelle l'élément formant levier d'armement (13) est agencé de sorte que lorsque la culasse (8) se déplace vers sa position de chargement, l'élément formant levier d'armement (13) mette en prise la gâchette (14).

14. Carabine à simple coup selon la revendication 13, comprenant de plus un marteau (12) configuré pour frapper le percuteur (24) lorsque la gâchette (14) est comprimée avec l'élément de sécurité (16) dans la position dans laquelle il n'empêche pas le tir de la carabine, le marteau (12) étant fixé de manière pivotante sur la culasse (8) de sorte qu'il se déplace avec la culasse (8) lorsque la culasse (8) se déplace entre la position de tir et la position de chargement.

15. Carabine à simple coup selon la revendication 14, dans laquelle le marteau (12) est raccordé à l'élément formant levier d'armement (13) de sorte qu'il soit retenu par l'élément formant levier d'armement (13) lorsque la culasse (8) se déplace de la position de chargement à la position de tir, de sorte que lorsque la culasse (8) atteint la position de tir, le marteau (12) soit armé pour être tiré vers le percuteur (24).

16. Carabine à simple coup selon l'une quelconque des revendications précédentes, comprenant de plus, un élément de protection de tir (9) associé à la culasse (8) et configuré pour dévier les étincelles qui sortent vers l'arrière au moment du tir.

17. Carabine à simple coup selon la revendication 16, dans laquelle ledit élément de protection de tir (9) comprend une surface de déflexion configurée pour dévier les étincelles vers l'intérieur de la boîte de culasse (1), les empêchant d'atteindre les yeux de l'utilisateur.

18. Carabine à simple coup selon la revendication 17, ladite surface de déflexion étant configurée de sorte qu'elle forme, dans le plan vertical traversant le canon (6) lorsque la carabine est dans une position d'utilisation classique, un angle d'approximativement 45 degrés avec la direction longitudinale dans laquelle le canon (6) s'étend.

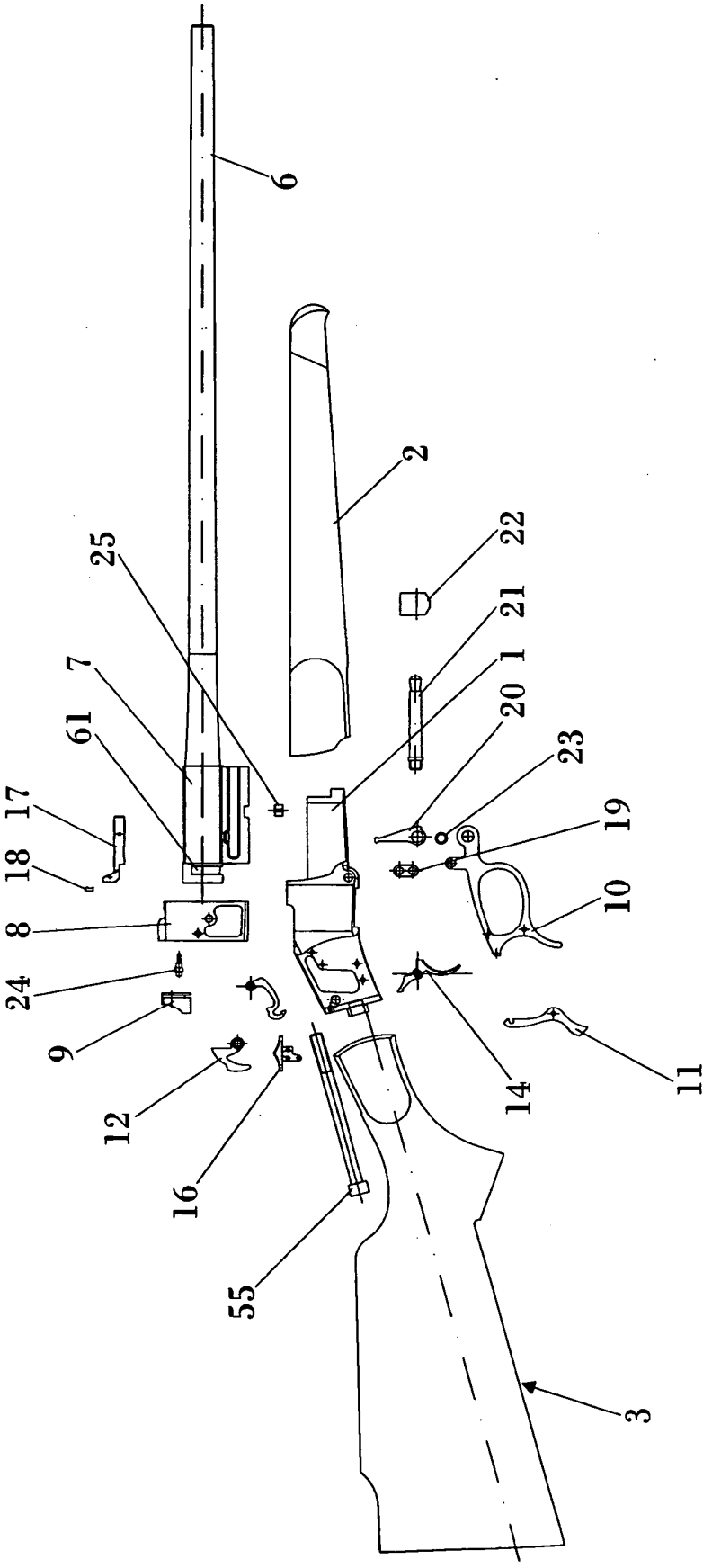

FIG. 1

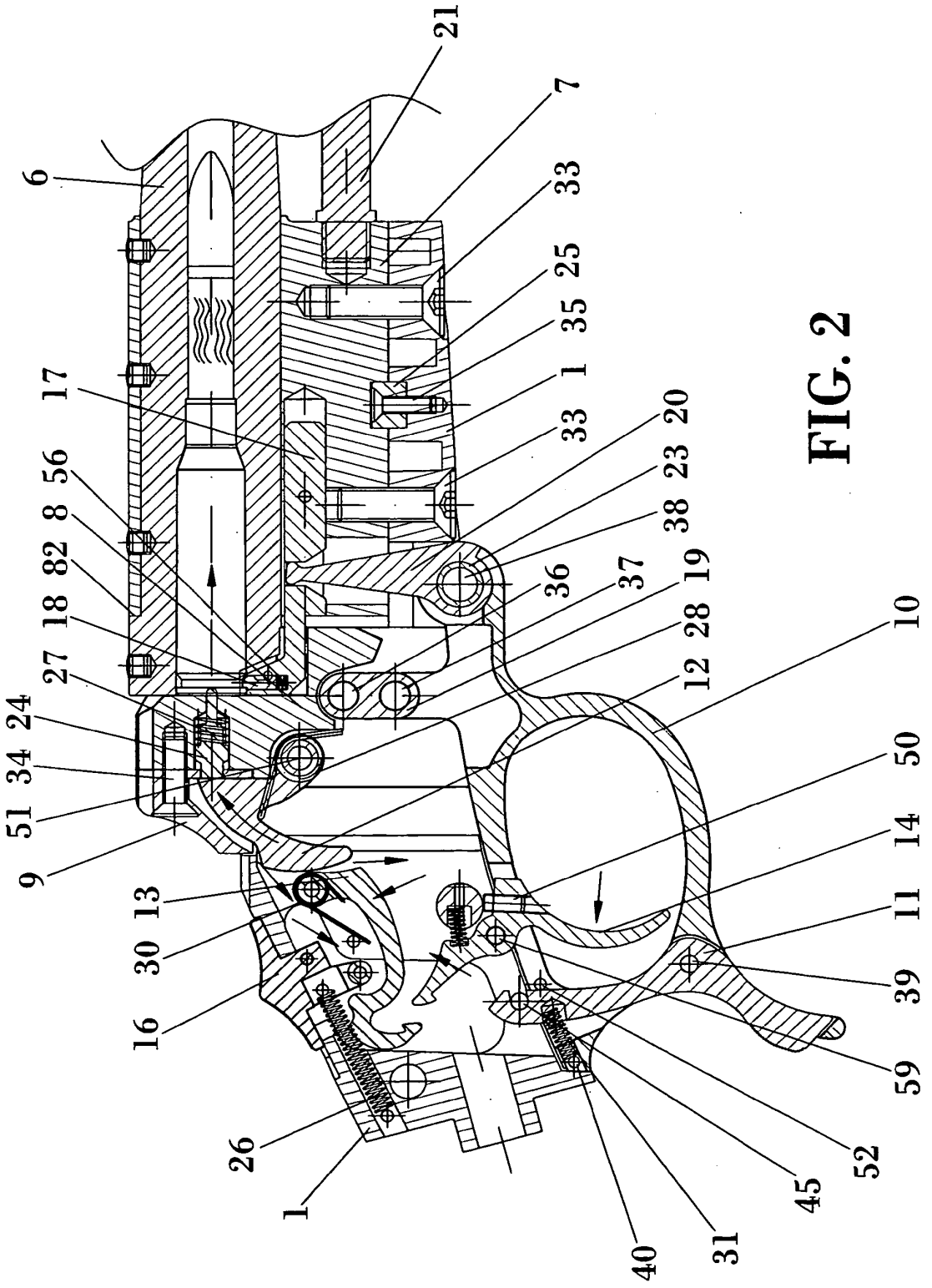
6
21
7
33
25
35
1
33
20
23
38
36
37
19
28
12
10
50
14
11
39
59
52
45
31
40
1
26
16
30
13
9
51
34
24
27
18
82
8
56
17

FIG. 2

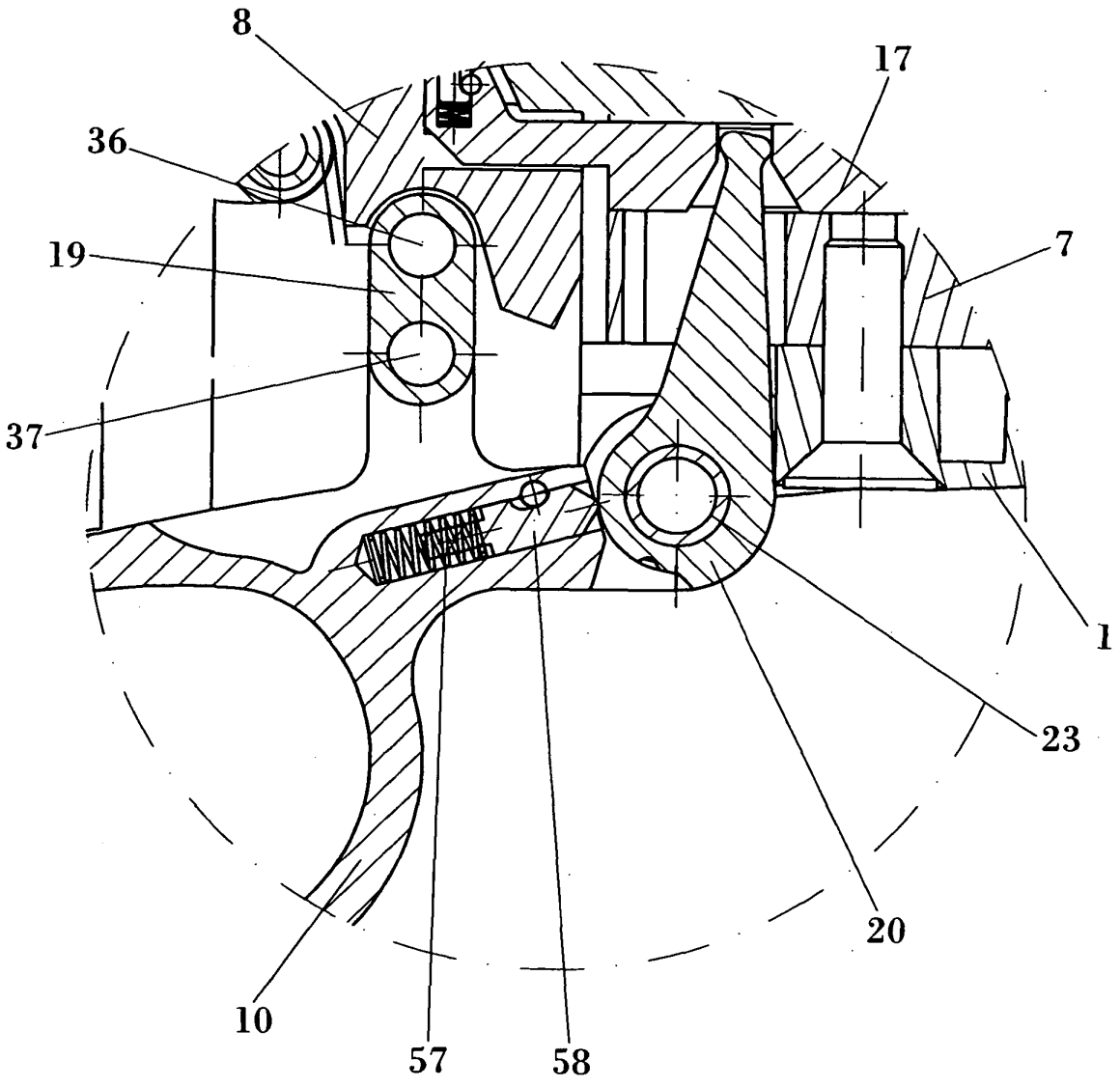

FIG. 3

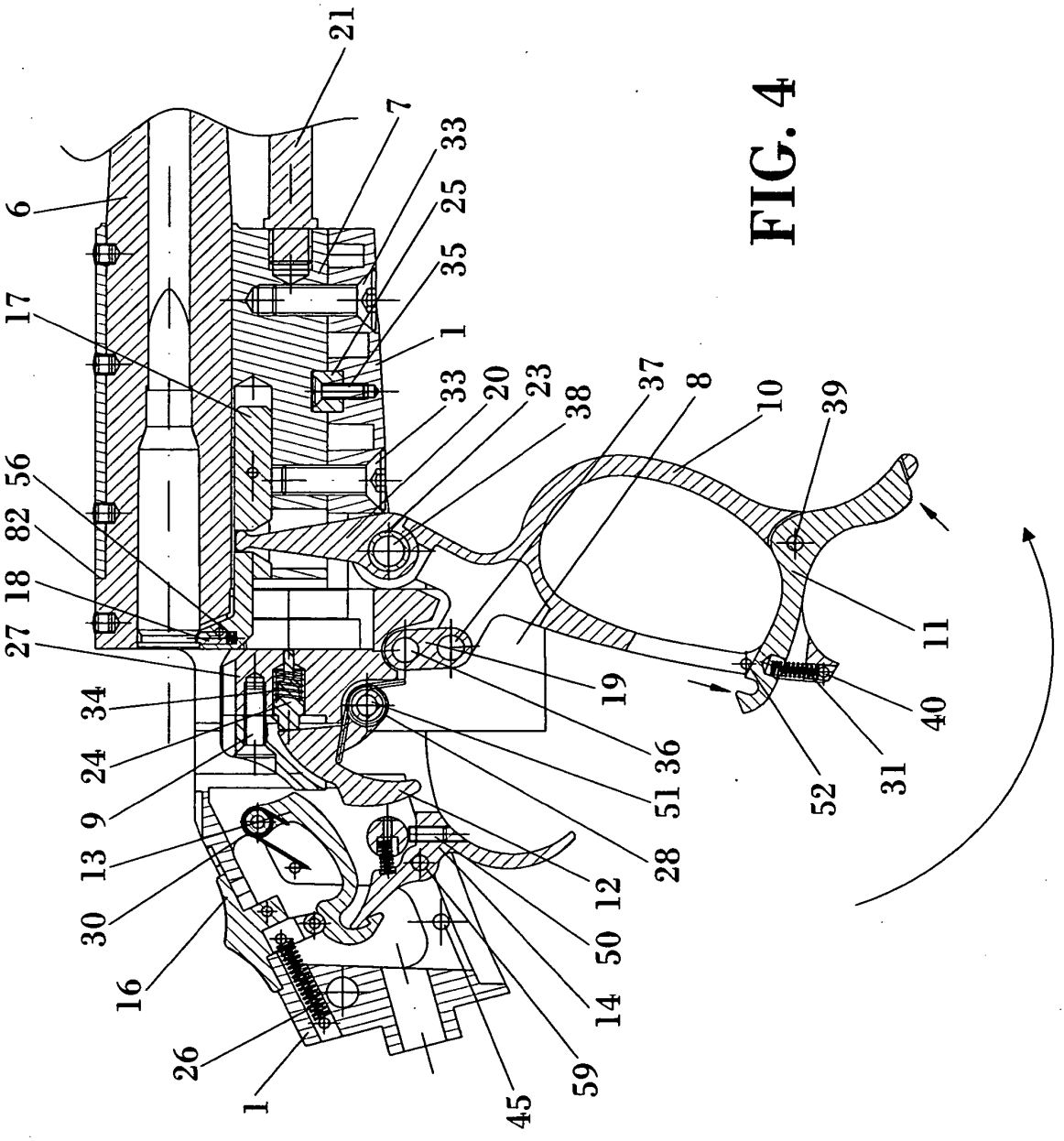
21
7
33
25
35
1
33
20
23
38
37
8
10
39
6
17
56
82
18
27
34
24
9
13
30
16
26
1
45
59
14
50
12
28
51
36
19
52
31
40
11

FIG. 4

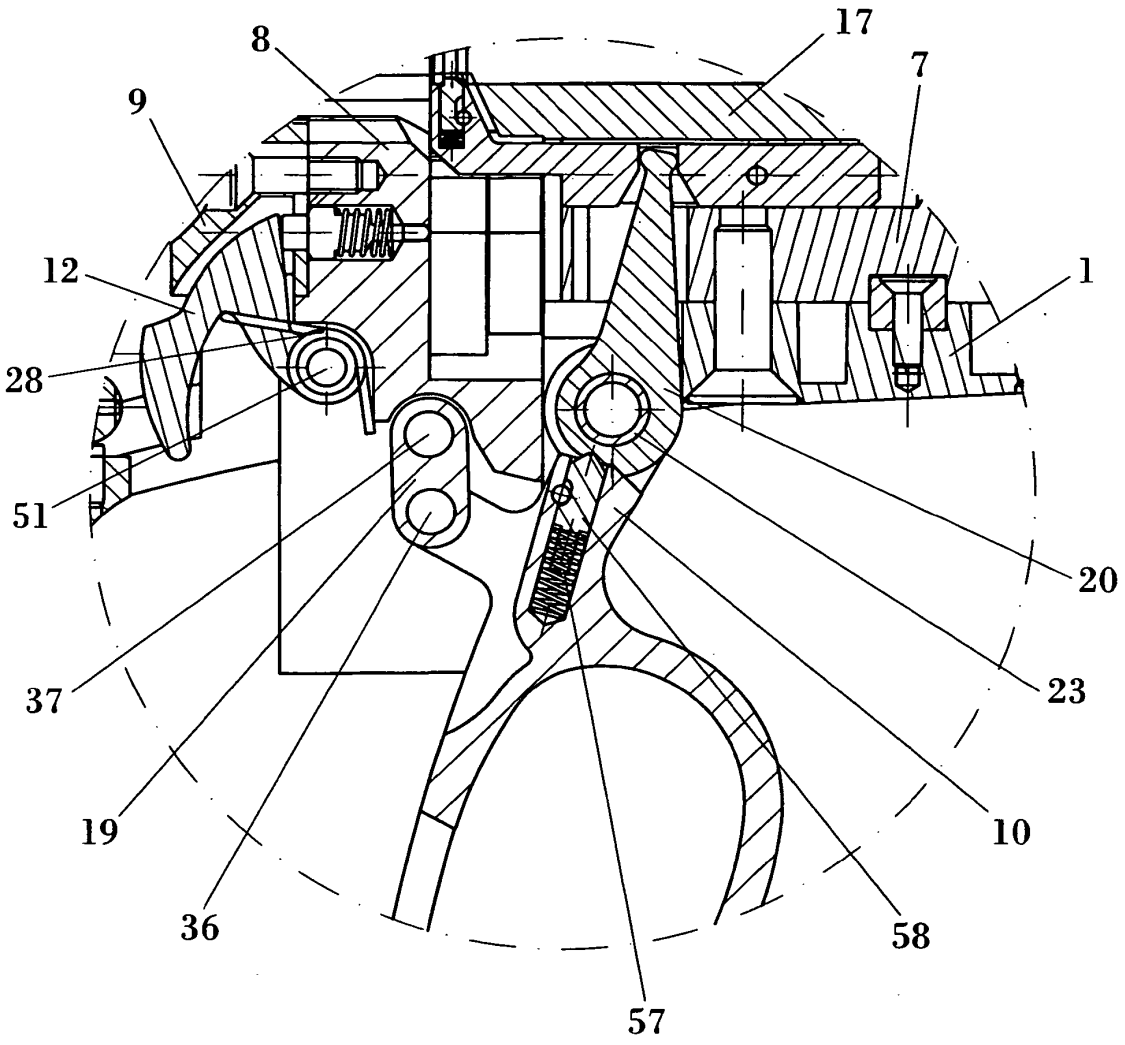

FIG. 5

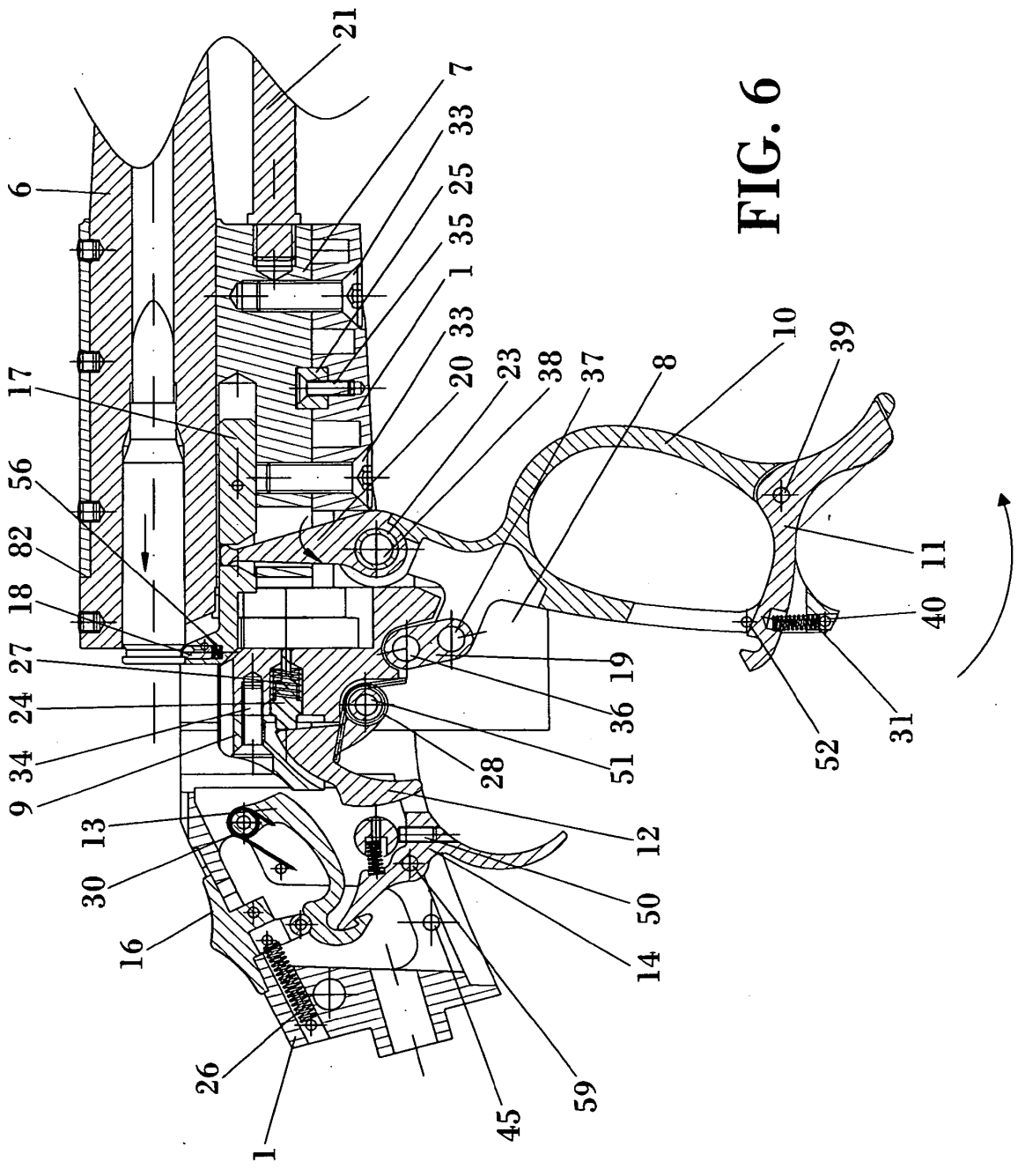
21
7
33
25
35
1
33
20
23
38
37
8
10
39
6
17
56
82
18
27
24
34
9
13
30
16
26
1
45
59
14
50
12
28
51
36
19
52
31
40
11

FIG. 6

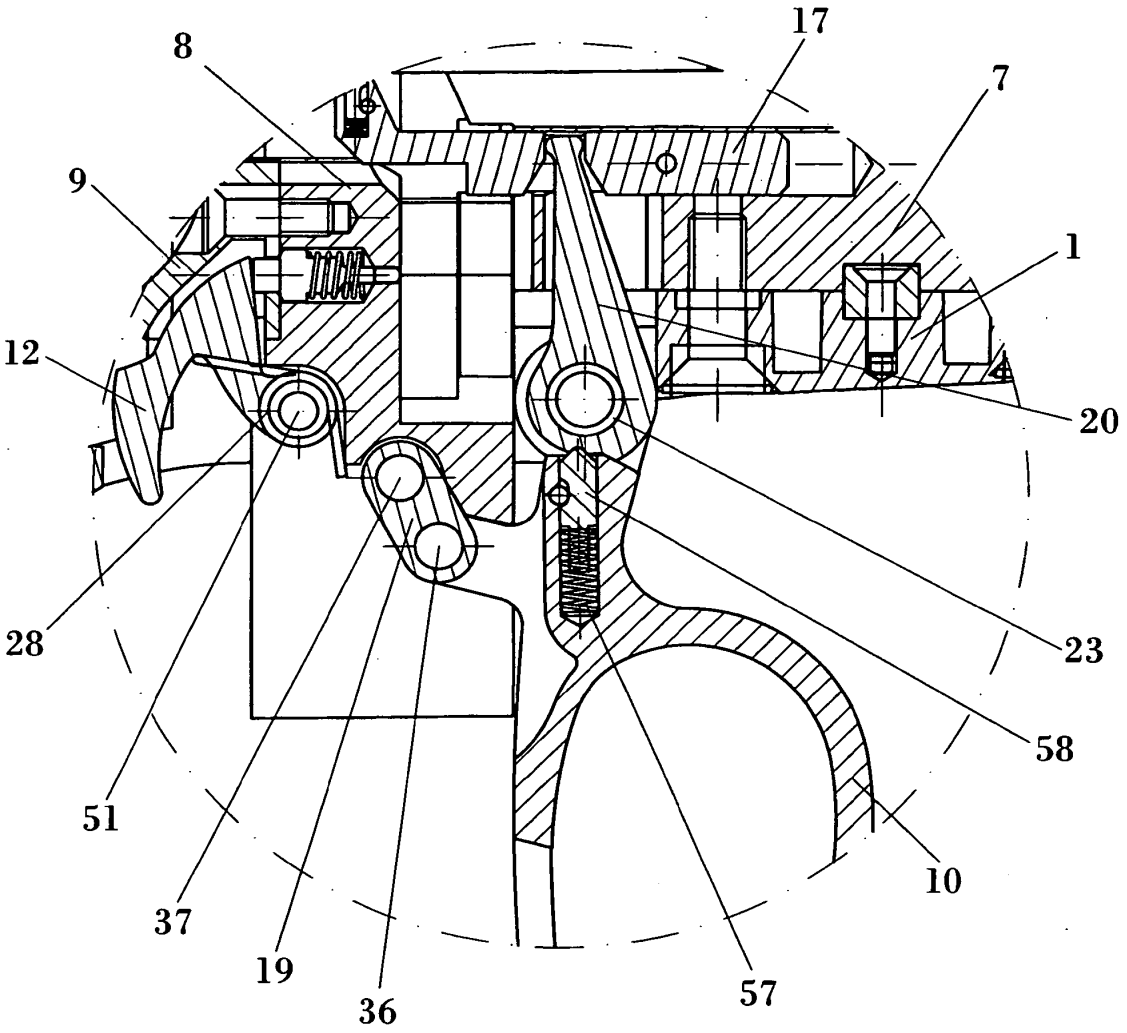

FIG. 7

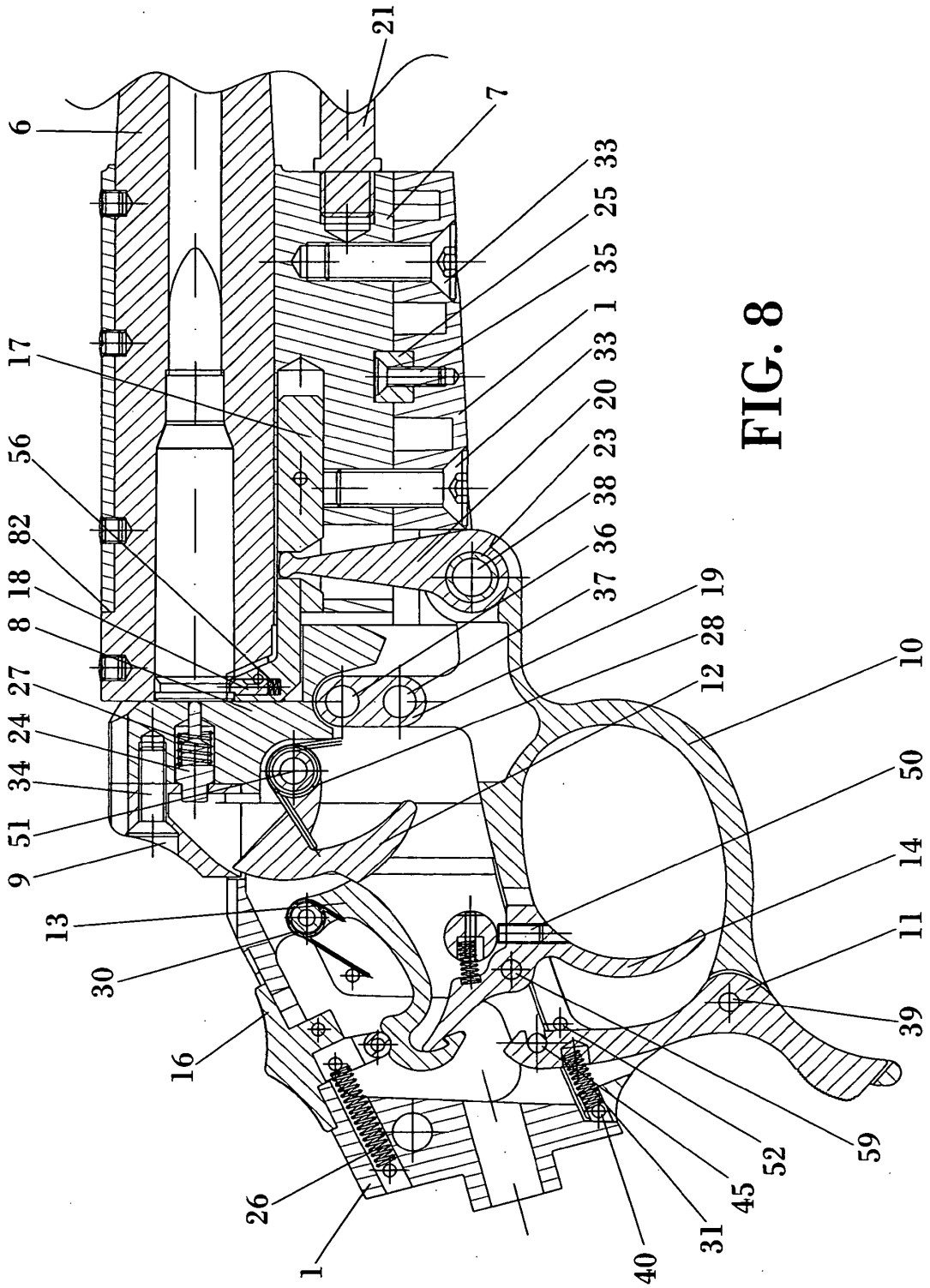
6
21
7
33
25
35
1
33
20
23
38
36
37
19
28
12
10
50
14
11
39
59
52
45
31
40
1
26
16
30
13
9
51
34
24
27
8
18
82
56
17

FIG. 8

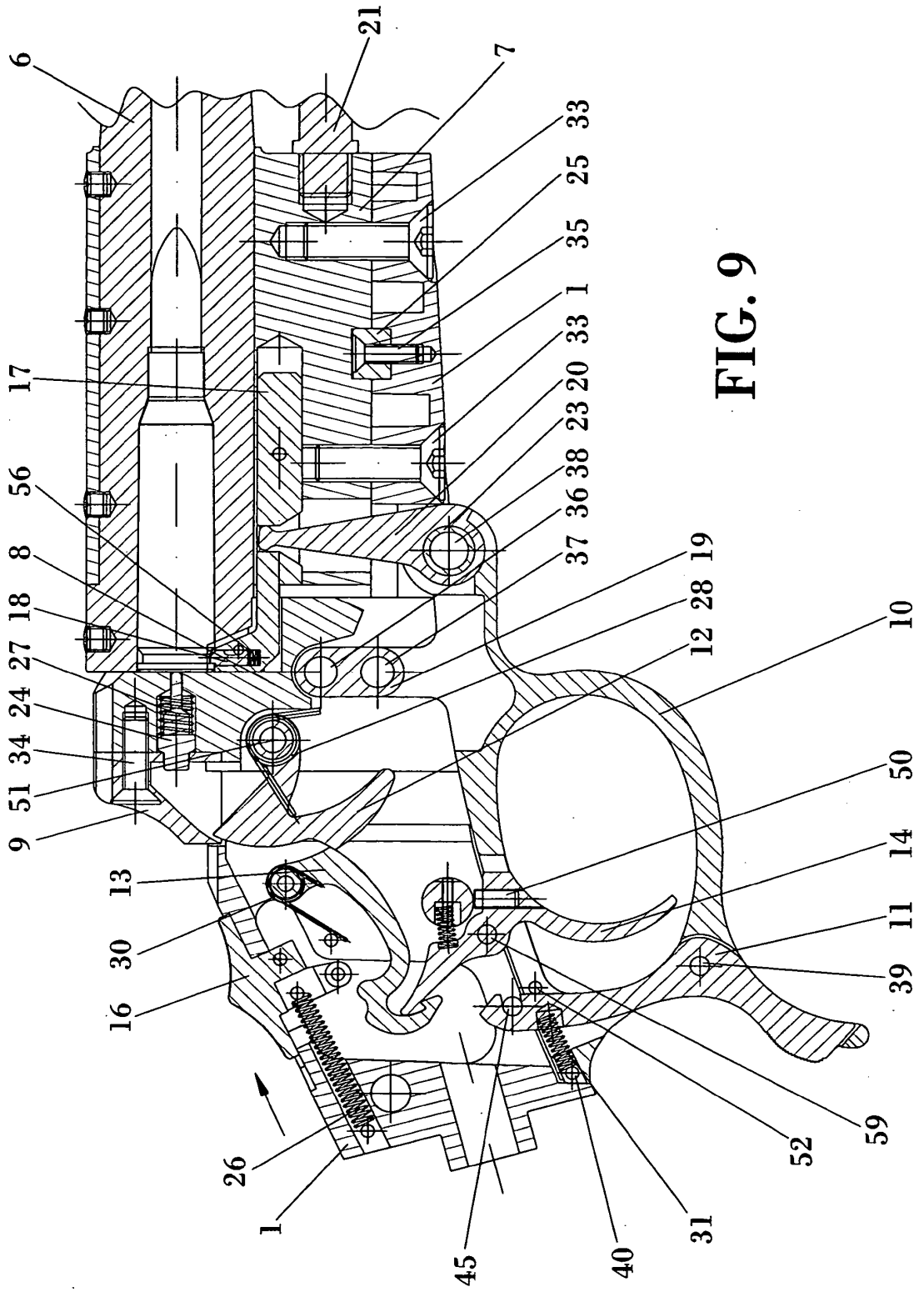
6
21
7
33
25
35
1
33
20
23
38
36
37
19
28
12
10
50
14
11
39
59
52
31
40
45
1
26
16
30
13
9
51
34
24
27
18
8
56
17

FIG. 9

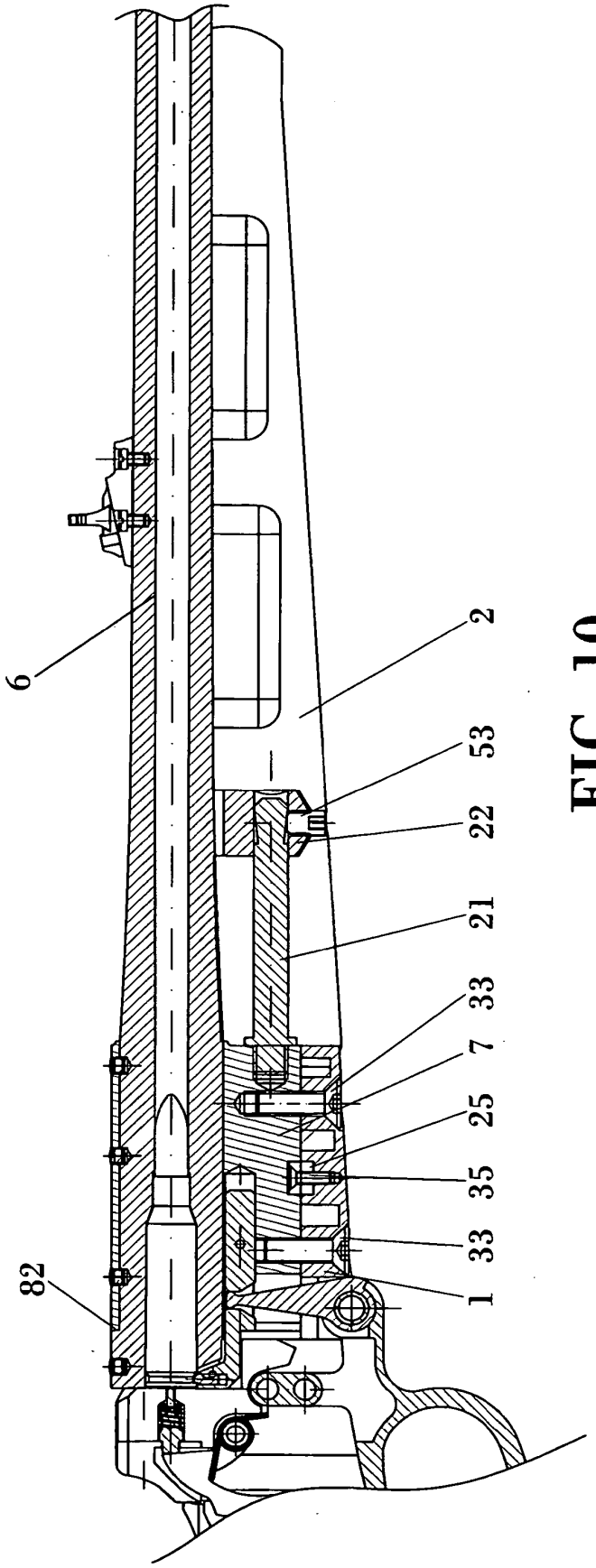

FIG. 10

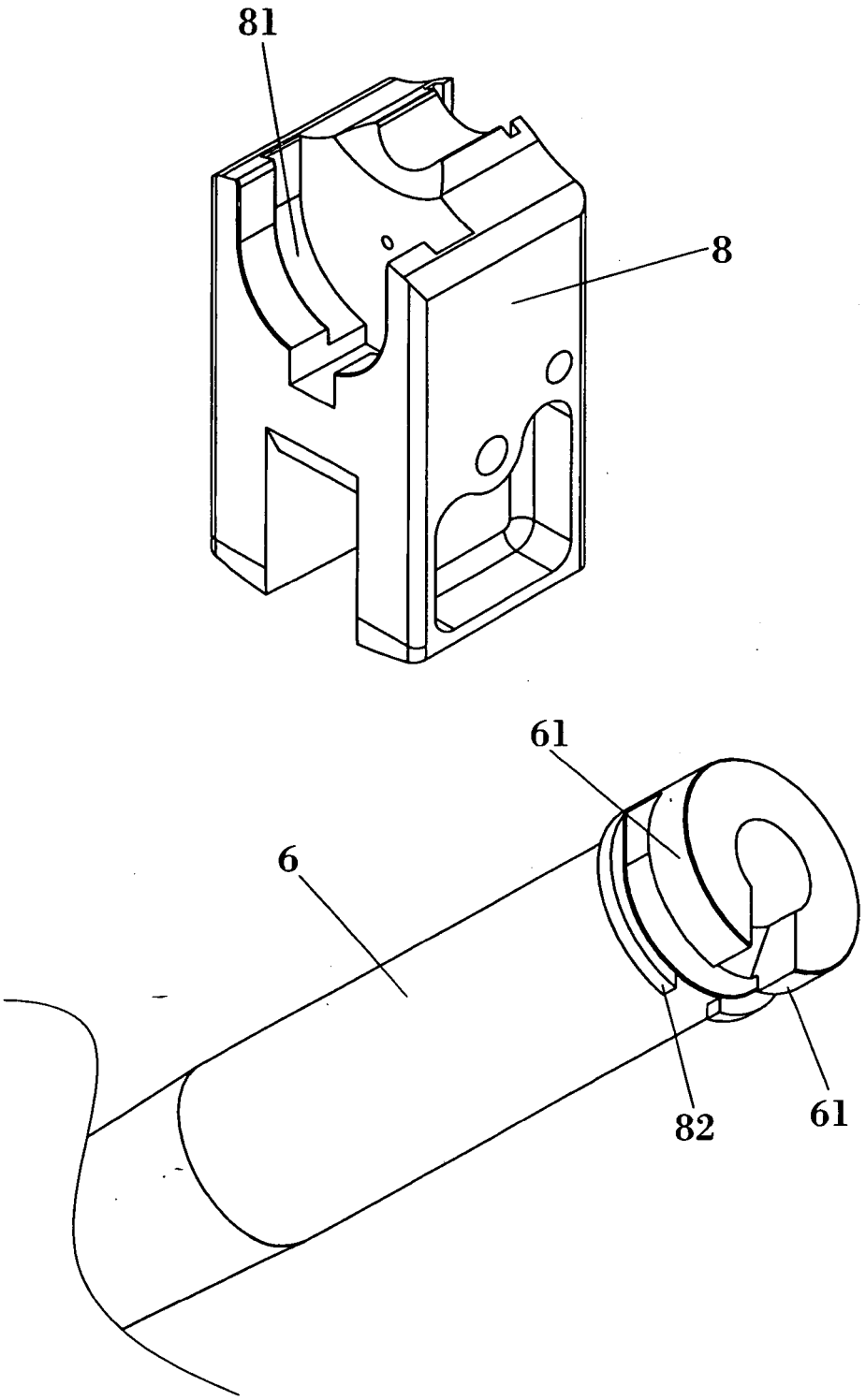

FIG. 11

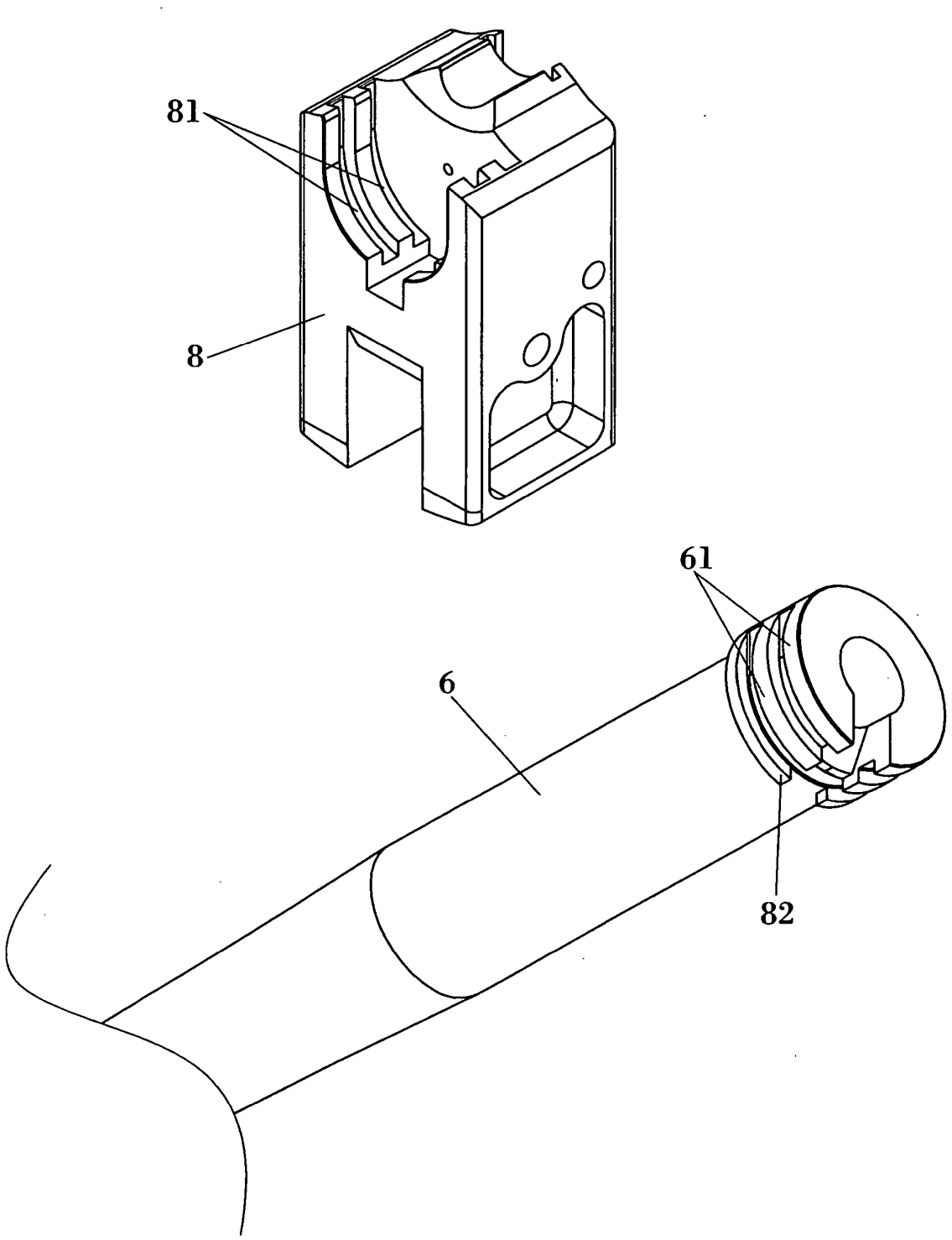

FIG. 12

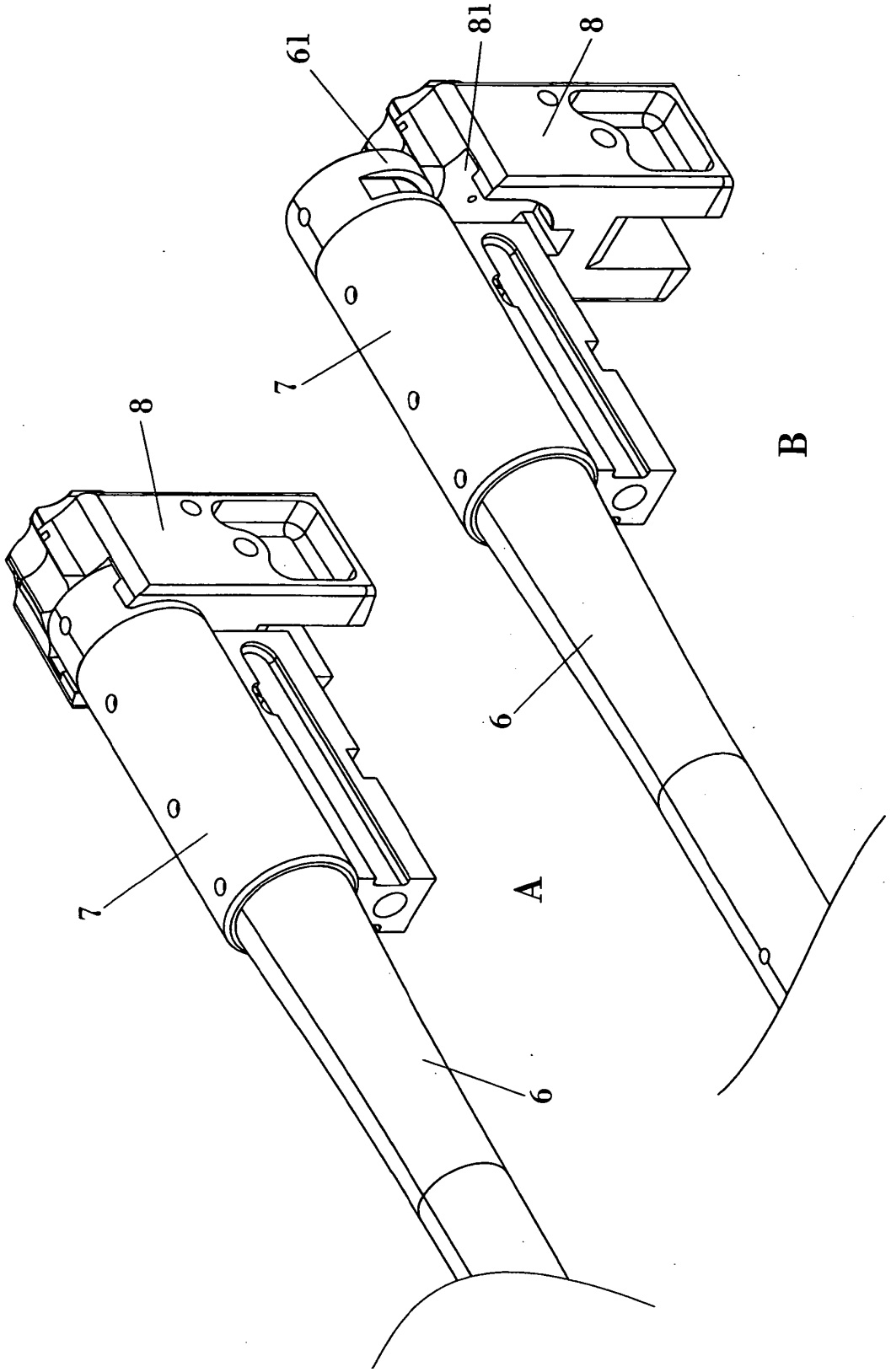

FIG. 13

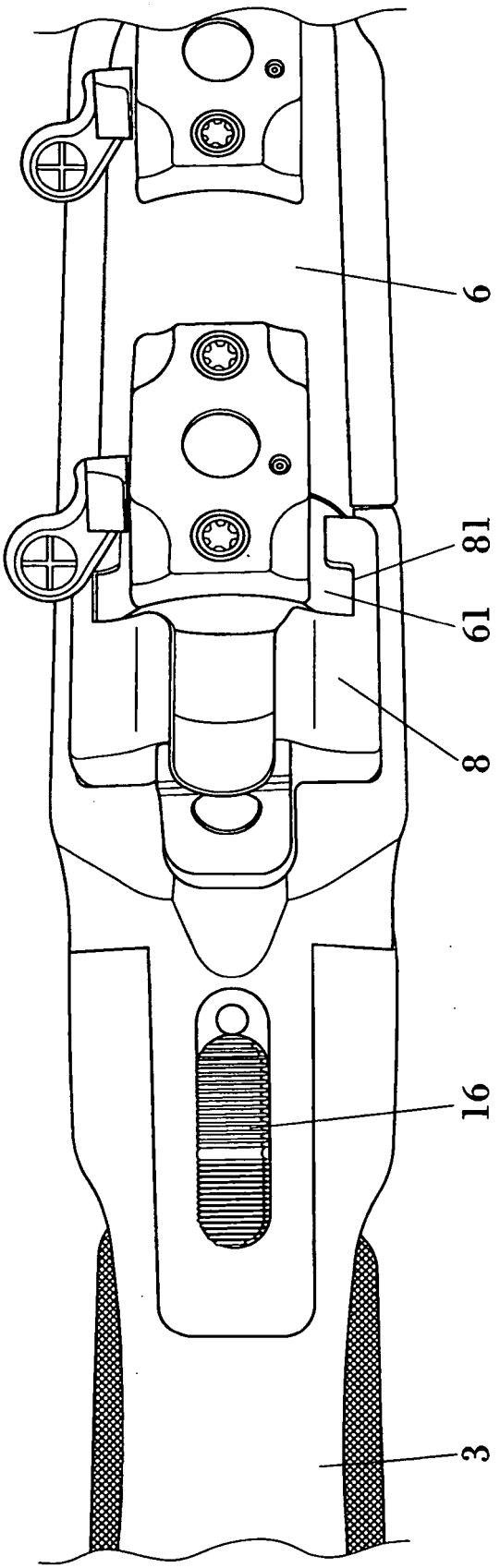

FIG. 14

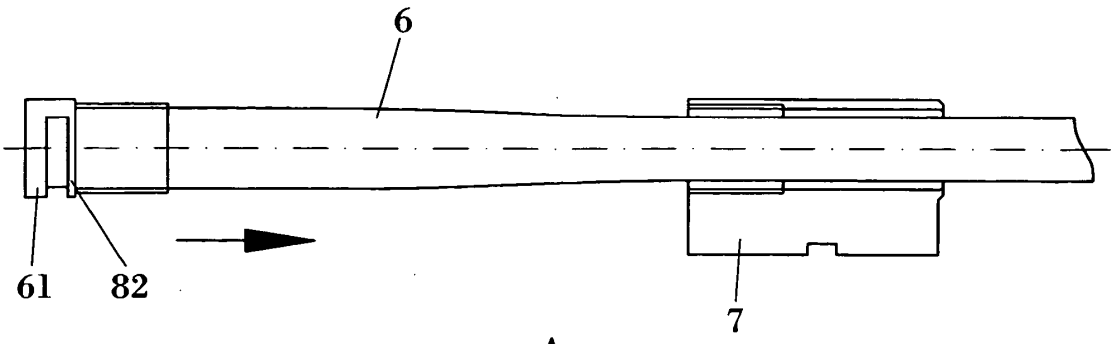

A

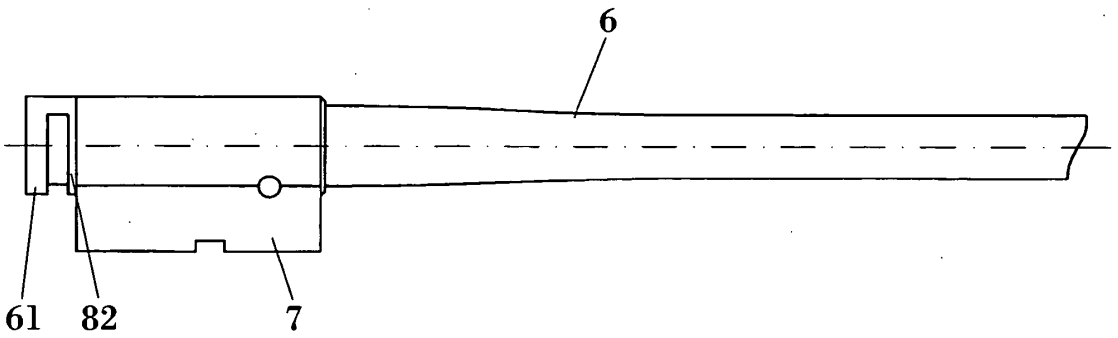

B

FIG. 15

REFERENCES CITED IN THE DESCRIPTION

This list of references cited by the applicant is for the reader's convenience only. It does not form part of the European patent document. Even though great care has been taken in compiling the references, errors or omissions cannot be excluded and the EPO disclaims all liability in this regard.

Patent documents cited in the description

- US 511633 A **[0002]**