(19) Europäisches Patentamt
European Patent Office
Office européen des brevets

(11) EP 2 204 323 A1

(12) EUROPEAN PATENT APPLICATION

(43) Date of publication:
**07.07.2010 Bulletin 2010/27**

(51) Int Cl.:
***B65B 11/00*** *(2006.01)*

(21) Application number: **09180430.2**

(22) Date of filing: **22.12.2009**

(84) Designated Contracting States:
**AT BE BG CH CY CZ DE DK EE ES FI FR GB GR HR HU IE IS IT LI LT LU LV MC MK MT NL NO PL PT RO SE SI SK SM TR**
Designated Extension States:
**AL BA RS**

(30) Priority: **30.12.2008 IT MO20080332**

(71) Applicant: **Aetna Group S.p.A.**
**47826 Villa Verucchio (RN) (IT)**

(72) Inventor: **Cere', Mauro**
**40050 Loiano (BO) (IT)**

(74) Representative: **Cicconetti, Andrea et al**
**Luppi Crugnola & Partners S.r.L.**
**Viale Corassori, 54**
**41124 Modena (IT)**

(54) **Wrapping machine**

(57) A wrapping machine (1) comprises a wrapping unit (2) for wrapping a product (100) with a film (50), first conveying means (3) and second conveying means (4) positioned respectively upstream and downstream of the wrapping unit (2) for moving the product (100) along a supplying direction (T), and a transferring unit (5) interposed between the conveying means (3, 4) to move the product (100) through the wrapping unit (2); the transferring unit (5) comprises transferring means (7) that is movable at least between a retracted position (A), wherein it does not interact with the film (50) being wrapped on said product (100), and an extended position (B), wherein the transferring means (7) supports and moves the product (100) through the wrapping unit (2).

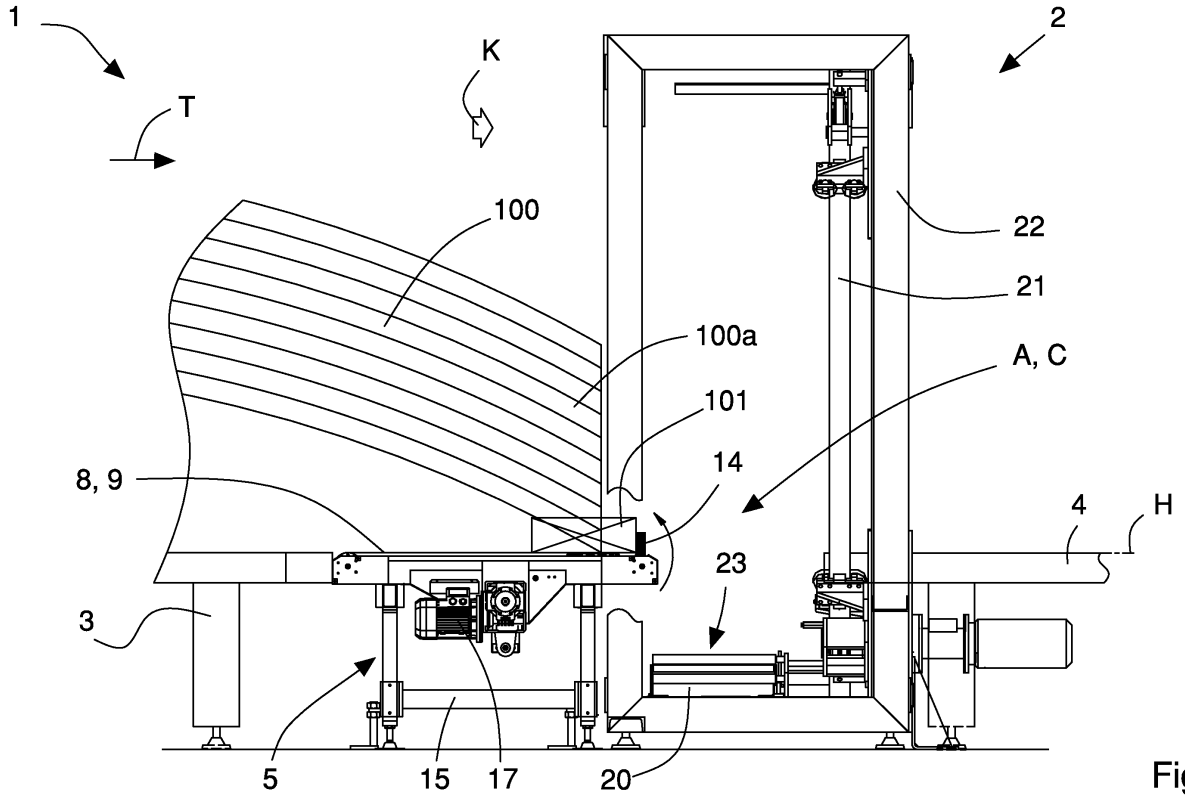


Fig. 2

EP 2 204 323 A1

## Description

**[0001]** The invention relates to machines for wrapping products with a film of extendible plastics. In particular, the invention refers to a wrapping machine arranged for wrapping a film around elongated products that rest on a small number of rests of limited dimensions, for examples products of irregular shape or of curve shape supported at opposite ends by respective supports.

**[0002]** Wrapping machines are known that are provided with a vertical ring that is rotatable around a horizontal rotation axis and supporting a reel of extendible plastics film and a corresponding unwrapping group.

**[0003]** Such machines include a horizontal conveying plane that extends through the vertical ring and on which are moved, along a supplying direction parallel to the aforesaid rotation axis, products or groups of products that have to be wrapped with the film.

**[0004]** During operation the film of plastics is unwound from the reel by the unwrapping group and is wound around the product so as to form a series of plaited bands or strips, owing to the combination of rotation movements of the vertical ring, that supports the reel of film, and linear movement of the product in the supplying direction.

**[0005]** Some machines are further set up for laying on the product or on the group of products a covering sheet on which the film of extendible plastics is subsequently wrapped. The covering sheet, which is also made of plastics, separates and insulates more effectively the product from the external environment.

**[0006]** The conveying plane generally consists of two conveyors, for example two conveyor belts or mats, that are aligned with one another and separated by a gap or an interruption at the vertical ring to enable the film to be wrapped around the objects. The width of the gap, i.e. the distance between the conveyor upstream and the conveyor downstream, depends on the width of the reel of film.

**[0007]** Such wrapping machines have the drawback of being able to wrap with film of plastics only elongated products that are able to exceed the aforesaid separation gap between the two conveyors, i.e. products that rest for almost the entire extend on the conveyors and that at the same time have a length that is greater than the width of the gap.

**[0008]** Products having a length that is the equivalent to that of the width of the gap and/or products that rest on a small number of rests of limited dimensions, for example products of an irregular shape or of curve shape arranged at opposite ends on respective supports, are not in fact able to get over the gap and move from the conveyor upstream to the conveyor downstream and vice versa.

**[0009]** United States patent US 4524568 illustrates a wrapping machine with a vertical rotating ring comprising an inlet conveyor, a wrapping conveying group, a distributing mechanism of the film of plastics supported by the rotating ring and an outlet conveyor.

**[0010]** The wrapping conveying group is interposed between the supplying conveyor and the outlet conveyor, at the distributing mechanism of the film, and comprises an upper conveyor and a lower conveyor that are superimposed on one another.

**[0011]** In use, the upper conveyor supports and moves the load to be wrapped, whilst the lower conveyor receives and moves the film being wrapped. In this manner, the film can be wrapped continuously around the load that moves from the supplying conveyor to the outlet conveyor through the rotating ring. In particular, when the load meets the outlet conveyor, the portion of film supported and moved by the lower conveyor disengages from the latter and adheres elastically to the lower portion of the load, previously abutting on the upper conveyor. The film detaches from the lower conveyor and adheres to the load, passing through a suitable passage between the conveying group and the outlet conveyor.

**[0012]** This wrapping machine is not, however, able to wrap appropriately curved products, i.e. products have an arched shaped with the convex part facing upwards. The conveying group in fact prevents the film being wrapped effectively around the lower portions of the product that are more distant from the aforesaid conveying group. In this case, in fact, owing to the distance, the only elasticity of the plastics does not enable the film, which disengages from the lower conveyor, to adhere firmly to the lower portion of the product.

**[0013]** Another drawback of the machine disclosed above consists of the complexity of the wrapping conveying group that comprises two overlapping motorized conveyors, which have to be driven in phase with the advancing of the load.

**[0014]** Further, during operation of the machine, movement of the film of plastics by the lower conveyor is very laborious, and especially the transfer of the film of plastics through the gap between the two conveyors. The film may in fact jam during the transfer and thus break, causing the machine to stop and the work cycle to be interrupted.

**[0015]** An object of the present invention is to improve the machines for wrapping products with a film of extendible plastics.

**[0016]** Another object is to make a machine that enables products to be wrapped with a film of extendible plastics continuously and completely that rest on a small number of rests of limited dimensions, in particular products with an irregular and/or curved shape arranged on opposite ends on respective supports.

**[0017]** A further object is to obtain a machine for wrapping with a film of extendible plastics, and possibly with a covering sheet, products having an arched shape so as to ensure an adhering and stable wrapping.

**[0018]** According to the invention a wrapping machine is provided comprising a wrapping unit for wrapping with a film a product, in particular a curved elongated product, first conveying means and second conveying means placed respectively upstream and downstream of said

wrapping unit for moving said product along a supplying direction, and transferring means interposed between said conveying means for moving said product through said wrapping unit, **characterised in that** said transferring unit comprises transferring means that is movable at least between a retracted position, in which it does not interact with said film wrapped on said product, and an extended position, in which said transferring means supports and moves said product through said wrapping unit.

**[0019]** Owing to the machine of the invention it is thus possible to wrap with a film, in an automatic, rapid and effective manner, a product having a small number of rests of limited dimensions, for example a product with an irregular and/or curved shape resting on opposite ends on respective supports. The film of extendible plastics is wrapped continuously and regularly around the product moved in the supplying direction, without the need for interruptions and/or interventions by operators and maintaining a wrapping speed that is comparable to the speeds used for regular products that rest entirely on the conveyors.

**[0020]** The transferring means in the extended position enables the supports, or rests, of the product to pass between the first conveying means and the second conveying means through the wrapping unit without the need to interrupt wrapping.

**[0021]** The product is slidably supported by first movement means, fixed to a supporting frame of the transferring unit, and by second movement means, fixed to a carriage of the transferring means that is slidably mounted on the supporting frame.

**[0022]** The transferring means comprises abutting means that is movable between an abutting position, in which it protrudes from the carriage to engage the moving product, and a disengaging position, in which said abutting means is inside the carriage so as not to interact with the product. The product when engaged by the abutting means pushes the transferring means into the extended position.

**[0023]** The transferring means further comprises slides around which the film wraps when the transferring means moves the product through the wrapping unit. The slides enable the film to disengage easily from the transferring means and to adhere to the product when the aforesaid transferring means is returned to the retracted position and/or when the product is advanced with respect thereto.

**[0024]** In the retracted position the transferring means does not interfere with wrapping of the film around the product. This enables, in the case of curved products, in particular products having an arched shape with the convex part facing upwards, the film to be wrapped effectively also around the lower portions of the product, said lower portions being further from the conveying means, so as to obtain compact and uniform wrapping along the entire length of the product. In addition to that, the product can be moved along the supplying direction and the film can be wrapped at high speed.

**[0025]** The invention can be better understood and implemented with reference to the attached drawings that illustrate some embodiments thereof by way of non-limiting example, in which:

Figure 1 is a frontal schematic view of a wrapping machine according to the invention arranged for wrapping a product of curved shape with a film of extendible plastics;

Figure 2 is a partial and enlarged view of the machine in Figure 1 in an operating step, showing in particular a transferring unit and a wrapping unit of the product;

Figure 3 is a perspective and enlarged view of the transferring unit in Figure 1, showing transferring means in a retracted configuration;

Figure 4 is an enlarged detail of Figure 3, illustrating abutting means of the transferring means in an abutting position;

Figure 5 is a frontal view of the transferring unit in Figure 3;

Figure 6 is a top plan view of the transferring unit in Figure 3;

Figure 7 is a side view of the transferring unit in Figure 5 with the abutting means in the abutting position;

Figure 8 is a partial and enlarged perspective view of the transferring unit in Figure 1, showing the transferring means in an extended configuration;

Figure 9 is an enlarged detail of Figure 8, showing the abutting means in a disengaging position;

Figure 10 is a frontal partial view of the transferring unit in Figure 1, showing the transferring means in the extended configuration;

Figures from 11 to 19 illustrate successive operating steps of wrapping the product with a film of plastics;

Figure 20 is a view of another embodiment of the wrapping machine arranged for laying a covering sheet on a product of curved shape and then wrapping the product with a film of plastics;

Figure 21 is an enlarged view of the machine in Figure 20 in an operating step;

Figures 22 to 33 illustrate successive operating steps of wrapping the product with a curved shape with the covering sheet and the film of plastics.

**[0026]** With reference to figures 1 to 10, there is illustrated the wrapping machine 1 of the invention arranged for wrapping a product 100 with a film 50 of extendible plastics unwound from a reel 20.

**[0027]** The product 100, in particular with an elongated and curved shape with the convex part facing upwards, rests on opposite ends 100a, 100b, on respective supports 101, 102. In particular, a front end 100a rests on one or more front supports 101, whilst a back end 100b rests on one or more back supports 102. Alternatively, the product can rest directly on the ends 100a, 100b.

**[0028]** The product 100 can include a single curved element or a plurality of curved elements that are superimposed and/or placed side by side to be packaged to-

gether.

**[0029]** The machine 1 comprises a wrapping unit 2 arranged for unwrapping the film 50 from the reel 20 and wrapping the film 50 in strips or bands superimposed on the product 100. The wrapping unit 2, which is of known type, comprises a wrapping ring 21, arranged vertically and supported rotatably by a frame 22 so as to rotate, in use, around a horizontal axis.

**[0030]** The ring 21 supports the reel 20 and a group of unwrapping and tensioning rollers 23 of the film 50. The unwrapping and tensioning rollers 23 are for example of motorized type, that are commanded so as to adjust an unwrapping speed of the film 50 during wrapping thereof onto the product 100, typically in function of the shape of the latter.

**[0031]** The machine 1 comprises first conveying means 3 and second conveying means 4 placed respectively upstream and downstream of the wrapping unit 2 to support and move the product 100 along a supplying direction T on a substantially horizontal movement plane H.

**[0032]** The first conveying means 3 and the second conveying means 4 are spaced away from one another at the wrapping unit 2.

**[0033]** The product 100 moved by the conveying means 3, 4 along the supplying direction T, in an advancing orientation K, traverses the wrapping ring 21 that by rotating wraps the film 50.

**[0034]** The first conveying means 3 and the second conveying means 4 respectively comprise a first conveyor and a second conveyor, provided with respective conveying straps or belts closed in a loop and driven by respective motors.

**[0035]** The machine 1 further includes a transferring unit 5 interposed between the first conveyor 3 and the second conveyor 4, at the wrapping unit 2, for supporting and moving the product 100 through the wrapping ring 21.

**[0036]** The transferring unit 5 is positioned next to the first conveyor 3 and comprises a supporting structure 15 to which first movement means 8, 9 and transferring means 7 are fixed. The first movement means 8, 9 and the transferring means 7 define a supporting plane S that is substantially coplanar with the movement plane H.

**[0037]** The first movement means 8, 9 comprises a pair of conveying chains or belts arranged parallel to one another and spaced apart from one another, on opposite sides of the supporting structure 15. In particular, the first movement means comprises a first conveying chain 8 and a second conveying chain 9, each of which including, for example, a pair of chain elements, wrapped in a closed loop around respective cogged wheels.

**[0038]** The first conveying chain 8 and the second conveying chain 9 are driven through a drive shaft 19 by a first motor 17, for example an electric motor, such as to move the product 100 in the supplying direction T.

**[0039]** The transferring means 7 is mounted slidably on the supporting structure 15 so as to be movable along the supplying direction T, between a retracted position A and an extended position B. In the retracted position A the transferring means 7 is positioned inside the supporting structure 15, so as not to interact with the film 50, being wrapped on the product 100 during operation of the machine 1. In the extended position B the transferring means 7 is elongated, protruding from the supporting structure 15 and brought near the second conveyor 4 to enable the product 100 to pass onto the latter and at the same time to enable the film 50 to slide, as shown further on in the description.

**[0040]** The transferring means 7 comprises a carriage 10 mounted slidably onto two guides 16 fixed to the supporting structure 15 and positioned between the first conveying chain 8 and the second conveying chain 9.

**[0041]** The carriage 10 is moved along the supplying direction T by first driving means 11 fixed to the supporting structure 15. The first driving means 11 comprises, for example, a linear actuator, for example a dual-effect pneumatic cylinder. Alternatively, the linear actuator 11 can be of the hydraulic or electric type.

**[0042]** To the carriage 10 second movement means 12, 13 is connected that is suitable for slidably supporting the product 100 along the supplying direction T.

**[0043]** The second movement means comprises a first conveying belt 12 and a second conveying belt 13, arranged parallel to one another and spaced apart on opposite sides of said carriage 10.

**[0044]** The first conveying chain 8, the second conveying chain 9, the first conveying belt 12 and the second belt define the supporting plane S.

**[0045]** The first conveying belt 12 and the second conveying belt 13 are mounted free to rotate and are moved by the same product 100, moved in the supplying direction T by the first movement means 8, 9.

**[0046]** Alternatively, the first conveying belt 12 and the second conveying belt 13 can be motorized and driven by a respective electric motor.

**[0047]** The transferring means 7 also comprises abutting means 14 arranged for abutting on the product 100 during movement thereof in the advancing orientation K such that the same product 100 pushes the transferring means 7 from the retracted position A to the extended position B, as explained further on in the description.

**[0048]** The abutting means comprises an abutting element 14, which is L-shaped and rotatably fixed to the carriage 10. The abutting element 14 is movable between an abutting position C and a disengaging position D. In the abutting position C the abutting element 14 protrudes from the carriage 10, above the supporting plane S, so as to be engaged by a frontal portion of the product 100. In the disengaging position D the arresting element 14 is rotated inside the carriage 10, below the supporting plane S, such as to enable the product 100 to slide freely.

**[0049]** The arresting element 14 is driven between the abutting position C and the disengaging position D by second driving means 18 fixed to the carriage 10. The second driving means 18 comprises, for example, a respective linear actuator, for example a dual-effect pneu-

matic cylinder. Alternatively, the linear actuator 18 can be of hydraulic or electric type.

**[0050]** The carriage 10 is provided below with slide means 31, 32 arranged for facilitating the sliding and the disengagement of the film 50 from the transferring means 7 during operation of the machine.

**[0051]** The slide means comprises a first slide 31 and a second slide 32 positioned respectively below the first conveyor belt 12 and below the second conveyor belt 13. Each slide 31, 32 comprises a first arched portion 31a, 32a, provided at an outer end of the carriage 10 facing the second conveyor 4, and a second substantially flat portion 31b, 32b that extends along the entire length of the aforesaid carriage 10.

**[0052]** With reference to figures 11 to 19, the procedure of wrapping the curved product 100 by the wrapping machine 1 of the invention provides a plurality of successive operating steps. In an initial step, in which the product 100 is advanced by the first conveyor 3 towards the wrapping unit 2, the transferring means 7 is in the retracted position A and the abutting means 14 is in the abutting position C so as to be contacted by the front support 101 (Figure 11).

**[0053]** The product 100, moved with a continuous linear motion by the first conveyor 3 and by the first movement means 8, 9 of the transferring unit 5, pushes the transferring means 7 towards the wrapping ring 21. The first driving means 11 cooperates with the product 100 in the movement towards the outside of the transferring means 7. In particular, the pneumatic cylinder 11 is supplied with a pressure that is such as to enable the product 100 to move the transferring means 7 whilst exercising a minimum thrust.

**[0054]** When the carriage 10 of the transferring means 7 protrudes by a preset amount from the supporting structure 15, the wrapping ring 21 is rotated so as to wrap with the film 50 the front end 100a of the product 100 and, partially, the front support 101 (Figure 12). The film 50 also wraps below on the slides 31, 32 of the transferring means 7.

**[0055]** When the transferring means 7 is moved in the extended position B (Figure 13), the abutting means 14 is rotated in the disengaging position D to enable the front support 101 of the product 100 to be transferred to the second conveyor 4.

**[0056]** When the front support 101 is located completely on the second conveyor 4, the transferring means 7 is returned to the retracted position A, by driving the first driving means 11 in an orientation opposite the advancing orientation K (Figure 14).

**[0057]** During retracting movement of the transferring means 7 the film 50 slides on, and disengages from, the slides 31, 32 and adheres to the product 100 owing to the elasticity of the plastics that have been previously stretched by the unwrapping and tensioning rollers 23 of the wrapping unit 2.

**[0058]** The transferring means 7 is maintained in the retracted position A so as to enable the film 50 to wraps freely around the product 100 (Figure 15) so as to adhere to the latter with the necessary force. This is also made possible by virtue of the unwrapping and tensioning rollers 23 that are motorized and suitably controlled.

**[0059]** When the back support 102 of the product 100 contacts the abutting means 14 which has been previously rotated in the abutting position C (Figure 16), similarly to what occurred in the case of the front support 101, the transferring means 7 is pushed by the back support 102 (Figure 17) and is taken to the extended position B (Figure 18) to enable the entire product 100 to be transferred to the second conveyor 4.

**[0060]** The steps disclosed above and illustrated in figures 16 to 18 are repeated if the product 100 has further supports.

**[0061]** Once wrapping of the back end 100b of the product 100, the film 50 is cut and separated from the reel 20 and the free flap that is thus obtained is made to adhere to the product 100 with known means that are not illustrated in the figures (Figure 19).

**[0062]** During the progressive advancing of the product 100 the strips of film 50 wrapped on the slides 31, 32 slide on the latter and adhere to the product 100, the slides 31, 32 being guided by the arched portions 31a, 31b of said slides 31, 32. More precisely, the strips of film 50 pass through a gap located between the transferring means 7, also in the extended portion B, and the second conveyor 4.

**[0063]** Owing to the wrapping machine of the invention it is thus possible to wrap in an automatic, rapid and effective manner a product 100 having an irregular and/or curved elongated shape that rests on a small number of supports of limited dimensions.

**[0064]** The film 50 of plastics is wrapped continuously and regularly around the product 100 whilst the product 100 moves in the supplying direction T, without the need for interventions by operators and maintaining the same wrapping speed used for regular products, the entire extend of which rests on the conveyors.

**[0065]** The transferring means 7, in the extended position B enables the supports to be transferred from the first conveyor 3 to the second conveyor 4 and vice versa. The transferring means 7 moved in the retracted configuration A enables the strips of film 50 wrapped on the slides 31, 32 to slide and disengage, and adhere to the product 100, in particular to a lower portion of the latter.

**[0066]** With reference to figures 20 and 21, another embodiment of the wrapping machine 1 is illustrated that differs from the previously disclosed embodiment through the fact that it comprises means for positioning a covering sheet 60 on the product 100.

**[0067]** In particular, the machine 1 comprises delivering means 40 fixed to the top of a second frame 42 and arranged for unwrapping the covering sheet 60 from a respective reel 61.

**[0068]** A first connecting unit 25 is interposed between the first conveyor 3 and the transferring unit 5, almost below the delivering means 40, for supporting and mov-

ing the product 100 and simultaneously retaining an initial flap 60a of the covering sheet 60 and enabling the initial flap 60a to wrap around the front end 100a of the product 100.

**[0069]** The transferring unit 5 is substantially interposed between the second frame 42 and the first frame 22 of the wrapping unit 2.

**[0070]** The first connecting unit 25, which is of known type and is therefore not disclosed in detail in the figures, comprises a first fixed portion 26 provided with advancing means of the product 100, such as conveyor belts or chains, and a first movable portion 27, which is also provided with respective advancing means of the product 100.

**[0071]** The first movable portion 27 is driven by third driving means 28 between a raised position E and a lowered position F. In the raised position E the first movable portion 27 is substantially vertical and spaced away from the transferring unit 5 so as to make an opening on the movement plane H for the descent of the covering sheet 60.

**[0072]** In the lowered position F the first movable portion 27 is substantially horizontal and aligned on the first fixed portion 26 and on the transferring unit 5 so as to enable the product 100 to be transferred from the first conveyor 3 to the transferring unit 5.

**[0073]** In the lowered position F one or more first rollers 29 arranged on a free end of the first movable portion 27 retain the covering sheet 60 against the supporting structure 15 to enable the initial flap 60a to wrap around the front end 100a of the product 100, as explained further on in the description.

**[0074]** Downstream of the wrapping unit 2 the machine 1 comprises folding means 45 fixed to a third frame 43 and arranged to interact with an end flap 60b of the covering sheet 60 so as to enable the subsequent folding thereof under the back end 100b of the product 100.

**[0075]** The folding means 45 comprises a folding element 46, having an elongated shape and being arranged transversely to the covering sheet 60, almost parallel to the movement plane H.

**[0076]** The folding element 46 is movable along a folding direction V that is almost orthogonal to the aforesaid movement plane H.

**[0077]** Fourth driving means 47 is provided for moving the folding element 46 along the folding direction V. The fourth driving means 47 comprises several straps 49 to which the folding element 46 is fixed. The straps 49 are closed in a loop around respective pulleys and are rotated by a second motor 48, for example an electric motor.

**[0078]** The machine further comprises a second connecting unit 35 that is substantially equal to the first connecting unit 25 and is interposed between the transferring unit 5 and the second conveyor 4.

**[0079]** The second connecting unit 35 comprises a second fixed portion 36 provided with respective advancing means of the product 100, such as conveyor belts or chains, and a second movable portion 37, which is also provided with respective advancing means of the product 100. The second movable portion 37 is driven by fifth driving means 38 between a respective raised position E and a respective lowered position F.

**[0080]** In the respective raised position E the second movable portion 37 is almost vertical and spaced away from the second conveyor 4 so as to make on the movement plane H an opening for the descent of the folding element 46 and of the end flap 60b of the covering sheet 60.

**[0081]** In the respective lowered position F the second movable portion 37 is substantially aligned with the second fixed portion 36 and with the second conveyor 4 so as to enable the product 100 to move from the transferring unit 5 to the second conveyor 4.

**[0082]** Second rollers 39 are provided on a free end of the second movable portion 37 to retain, in the lowered position F, the covering sheet 60 against the second conveyor 4 and enable the end flap 60b to wrap around the back end 100b of the product 100, as explained in greater detail further on in the description.

**[0083]** With reference to figures 20 to 33, the procedure of wrapping the curved product 100 with the covering sheet 60 and the film of plastics 50 provides a plurality of successive operating steps.

**[0084]** In an initial step, whilst the product 100 is moved by the first conveyor 3 in the supplying direction T towards the first connecting unit 25, the delivering means 40 unwraps the covering sheet 60 from the respective reel 61. The first movable portion 27 of the first connecting means 25 is in the raised position E to enable the initial flap 60a of the covering sheet 60 to reach below the movement plane H (Figure 20). By returning the first movable portion 27 to the lowered position F, the initial flap 60a remains engaged and retained by the first rollers 29 against the supporting structure 15 of the transferring unit 5 (Figure 21).

**[0085]** In this manner, in a subsequent operating step the product 100 abutting on the covering sheet 60 drags the aforesaid initial flap 60b, which is then folded below the front support 101 and below the front end 100a of the product 100. At the same time, the covering sheet 60 is unwound by the delivering means 40, so as to be applied, with a suitable tension, to the convex upper portion of the product 100 (Figure 22).

**[0086]** In this step the transferring means 7 of the transferring unit 5 is in the retracted position A and the abutting means 14 is in the abutting position C such as to be abutted by the front support 101 of the product 100.

**[0087]** The product 100, moved by the first conveyor 3 and by the first movement means 8, 9, pushes the transferring means 7 in the supplying direction T to the wrapping ring 21 and to the second connecting unit 35.

**[0088]** When the carriage 10 of the transferring means 7 protrudes by a preset amount from the supporting structure 15, the wrapping ring 21 is rotated so as to wrap with the film 50 the first end 100a of the product 100 and partially the front support 101 on which the covering sheet

60 is arranged. The film 50 is also wrapped below on the slides 31, 32 of the transferring means 7 (Figure 23).

**[0089]** When the transferring means 7 is carried in the extended position B, the abutting means 14 is rotated in the disengaging position D to enable the front support 101 of the product 100 to move to the second fixed portion 36 of the second connecting unit 35 and subsequently to the second movable portion 37 placed in the respective lowered position F.

**[0090]** With the front support 101 completely supported by the second connecting unit 35, the transferring means 7 is returned to the retracted position A, by driving the first driving means 11 in an orientation opposite the advancing orientation K of the product 100.

**[0091]** During the retracting movement of the transferring means 7 the film 50 disengages from the slides 31, 32 and, owing to the elasticity of the plastics, adheres to the product 100 (Figure 24).

**[0092]** The transferring means 7 is maintained in the retracted position A so as to enable the film 50 to wrap freely around the product 100 (Figure 25) until the back support 102 abuts on the abutting element 14, previously rotated in the abutting position C (Figure 26).

**[0093]** Similarly to what occurred in the case of the front support 101, the transferring means 7 pushed by the back support 102 are carried to the extended position B to enable said back support 102 to be transferred to the second connecting unit 35.

**[0094]** At the same time the covering sheet 60 is cut and separated from the respective reel 61, so that an end portion thereof is folded by the film 50 on the back end 100b of the product 100, the end flap 60b of the covering sheet 60 being extended on the transferring unit 5 (Figure 27).

**[0095]** After the wrapping of the back end 100b of the product 100 has terminated the wrapping ring 21 is stopped and the film 50 is cut and separated from the respective reel 20 and a free flap that is thus obtained is made to adhere to the product 100.

**[0096]** The product 100 is moved in the supplying direction T until the back support 102 is on the second conveyor 4 (Figure 28). At this point the second movable portion 37 of the second connecting unit 35 is arranged in the raised portion F so as to enable the descent of the folding element 46 along a folding direction V (Figure 29).

**[0097]** The folding element 46 pushes the end flap 60b of the covering sheet 60 below the movement plane H, substantially perpendicular and partially adhering to an end of the second conveyor 4 (Figure 30).

**[0098]** In a successive operating step, the second movable portion 37 is rotated in the lowered position F so as to retain with the second rollers 39 the end flap 60b against the end of the second conveyor 4 (Figure 31).

**[0099]** At this point the product 100 is moved in the supplying direction T in a retracting orientation J opposite the advancing orientation K, so as to drag the aforesaid end flap 60b, which is folded under the back support 102 and under the back end 100b of the product 100. The transferring means 7 is arranged in the extended position B to support slidably the back support 102.

**[0100]** After reaching the wrapping unit 2, the back end 100b with the folded end flap 60b is bound by the film 50 to complete wrapping (Figure 32).

**[0101]** The product 100 completely wrapped with film 50 and the covering sheet 60 is moved in the advancing direction T at the outlet from the machine.

**[0102]** It should be noted that during the progressive advancing of the product 100 the strips of film 50 wrapped on the slides 31, 32 of the transferring means 7 slide on the latter and adhere to the product 100 guided by the arched portions 31a, 31b of the aforesaid slides 31, 32. More precisely, the flaps of film 50 pass through a gap between the transferring means 7 and the second conveyor 4, also in the extended position B. The machine of the invention thus enables a covering sheet 60 and a film 50 to be applied and wrapped in an automatic, rapid and effective manner around a product 100 having a small number of rests of limited dimensions, for example a product with an irregular and/or curved shape resting on opposite ends on respective supports 101, 102. In particular, it is possible to fix the covering sheet 60 such that it adheres in an optimum manner to the ends of the product, the end flaps of said covering sheet 60 being folded under the supports and wrapped by the film. This wrapping ensures ideal protection of the product 100 that is thus effectively separated and isolated from the external environment.

## Claims

1. Wrapping machine (1) comprising a wrapping unit (2) for wrapping a product (100) with a film (50), in particular a curved elongated product, first conveying means (3) and second conveying means (4) positioned respectively upstream and downstream of said wrapping unit (2) for moving said product (100) along a supplying direction (T), and a transferring unit (5) interposed between said conveying means (3, 4) for moving said product (100) through said wrapping unit (2), **characterised in that** said transferring unit (5) comprises transferring means (7) movable at least between a retracted position (A), wherein said transferring means (7) does not interact with said film (50) that is wrapped around said product (100), and an extended position (B), wherein said transferring means (7) supports and moves said product (100) through said wrapping unit (2).

2. Machine according to claim 1, wherein said transferring unit (5) comprises a supporting structure (15) and first moving means (8, 9), said first moving means (8, 9) being connected to said supporting structure (15) and arranged for slidably supporting said product (100).

**3.** Machine according to claim 2, wherein said first moving means (8, 9) comprises a first conveying chain (8) and a second conveying chain (9) arranged parallel and spaced on opposite sides of said supporting structure (15), said first conveying chain (8) and said second conveying chain (9) being driven by a first motor (17).

**4.** Machine according to claim 2 or 3, wherein said transferring means (7) comprises carriage means (10) slidably mounted on said supporting structure (15).

**5.** Machine according to claim 4, wherein said transferring means (7) comprises second moving means (12, 13) connected to said carriage means (10) and arranged for slidably supporting said product (100).

**6.** Machine according to claim 5, wherein said second moving means (12, 13) comprises a first conveyor belt (12) and a second conveyor belt (13), arranged parallel and spaced on opposite sides of said carriage means (10).

**7.** Machine according to any preceding claim, wherein said transferring means (7) comprises movable abutting means (14) for abutting on said product (100) moved along said supplying direction (T).

**8.** Machine according to claim 7, as appended to any one of claims 4 to 6, wherein said abutting means comprises an abutting element (14) that is rotatably connected to said carriage means (10) and is movable between an abutting position (C), in which it protrudes from said carriage means (10) so as to engage said product (100), and a disengagement position (D), in which said stopping element (14) is inside said carriage means (10) so as not to interact with said product (100).

**9.** Machine according to any preceding claim, wherein said transferring means (7) comprises slide means (31, 32) arranged for receiving said film (50) being wrapped when said product (100) is supported and moved by said transferring means (7) through said wrapping unit (2).

**10.** Machine according to claim 9, wherein said slide means (31, 32) is shaped so as to facilitate disengagement of said film (50) from said transferring means (7) and wrapping thereof around said product (100) when said transferring means (7) is moved with respect to said product (100) and vice versa.

**11.** Machine according to claim 10, as claim 9 is appended to any one of claims 4 to 8 and as claim 7 is appended to any one of claims 4 to 6, wherein said slide means (31, 32) comprises a first slide (31) and a second slide (32), each of which being fixed to said carriage means (10) and comprising a respective curved portion (31a, 32a) at a free end of said carriage means (10) and a respective flat portion (31b, 32b) extending along said carriage means (10).

**12.** Machine according to any preceding claim, comprising first driving means (11) for moving said transferring means (7) along said supplying direction (T) at least between said retracted position (A) and said extended position (B).

**13.** Machine according to any preceding claim, wherein said wrapping unit (2) comprises ring means (10) rotating around an axis parallel to said supplying direction (T) and supporting at least one reel (20) of said film (50).

**14.** Machine according to any preceding claim, comprising delivering means (40) arranged for releasing a covering sheet (60) on said product (100).

**15.** Machine according to claim 14, comprising a first connecting unit (25) interposed between said first conveying means (3) and said transferring unit (5) and arranged for moving said product (100) and/or retaining an initial flap (60a) of said covering sheet (60) so as to enable said initial flap (60a) to be wrapped around a front end (100a) of said product (100).

**16.** Machine according to claim 14 or 15, comprising a second connecting unit (35) interposed between said transferring unit (5) and said second conveying means (4) to move said product (100) and/or retaining an end flap (60b) of said covering sheet (60) so as to enable said end flap (60b) to be wrapped around a back end (100b) of said product (100).

**17.** Machine according to claim 16, as appended to claim 15, wherein each connecting unit (25, 35) comprises a movable portion (27, 37) that is provided with respective advancing means of said product (100) and is movable between a raised position (E) and a lowered position (F) so as to engage and retain said covering sheet (60).

**18.** Machine according to claim 16 or 17, comprising folding means (45) arranged downstream of said wrapping unit (2) to interact with said end flap (60b) so as to facilitate subsequent folding thereof under said back end (100b).

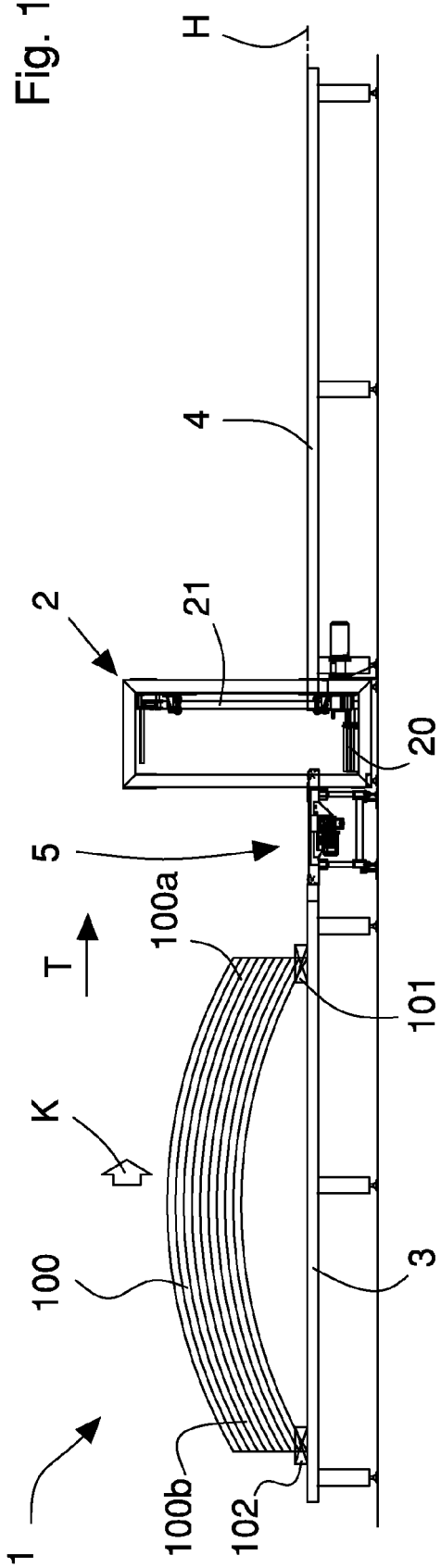


Fig. 1

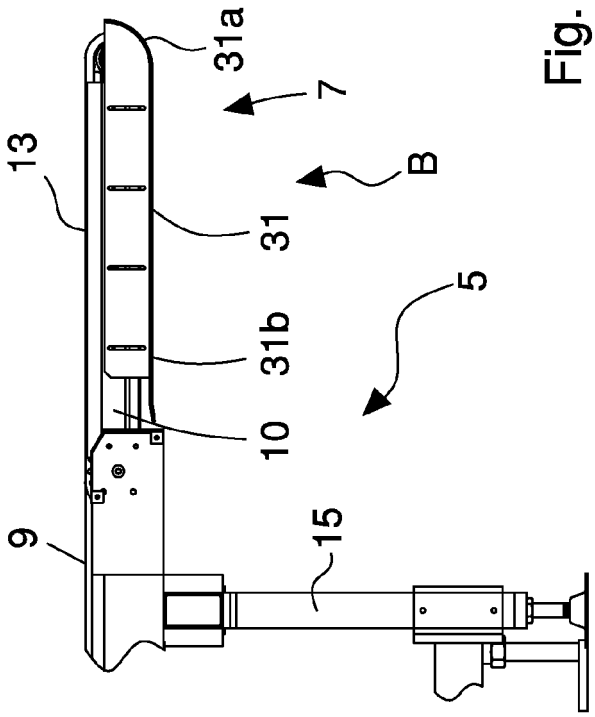


Fig. 10

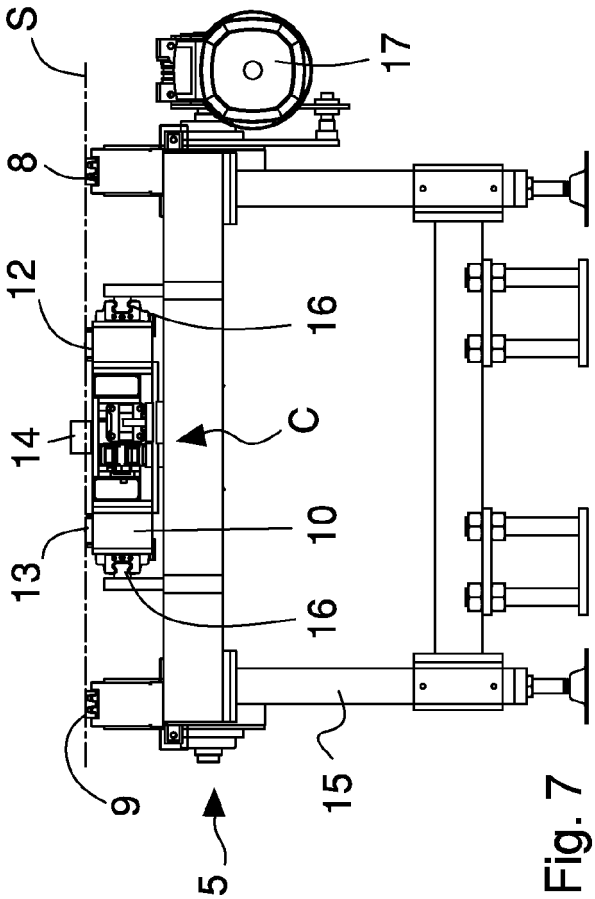


Fig. 7

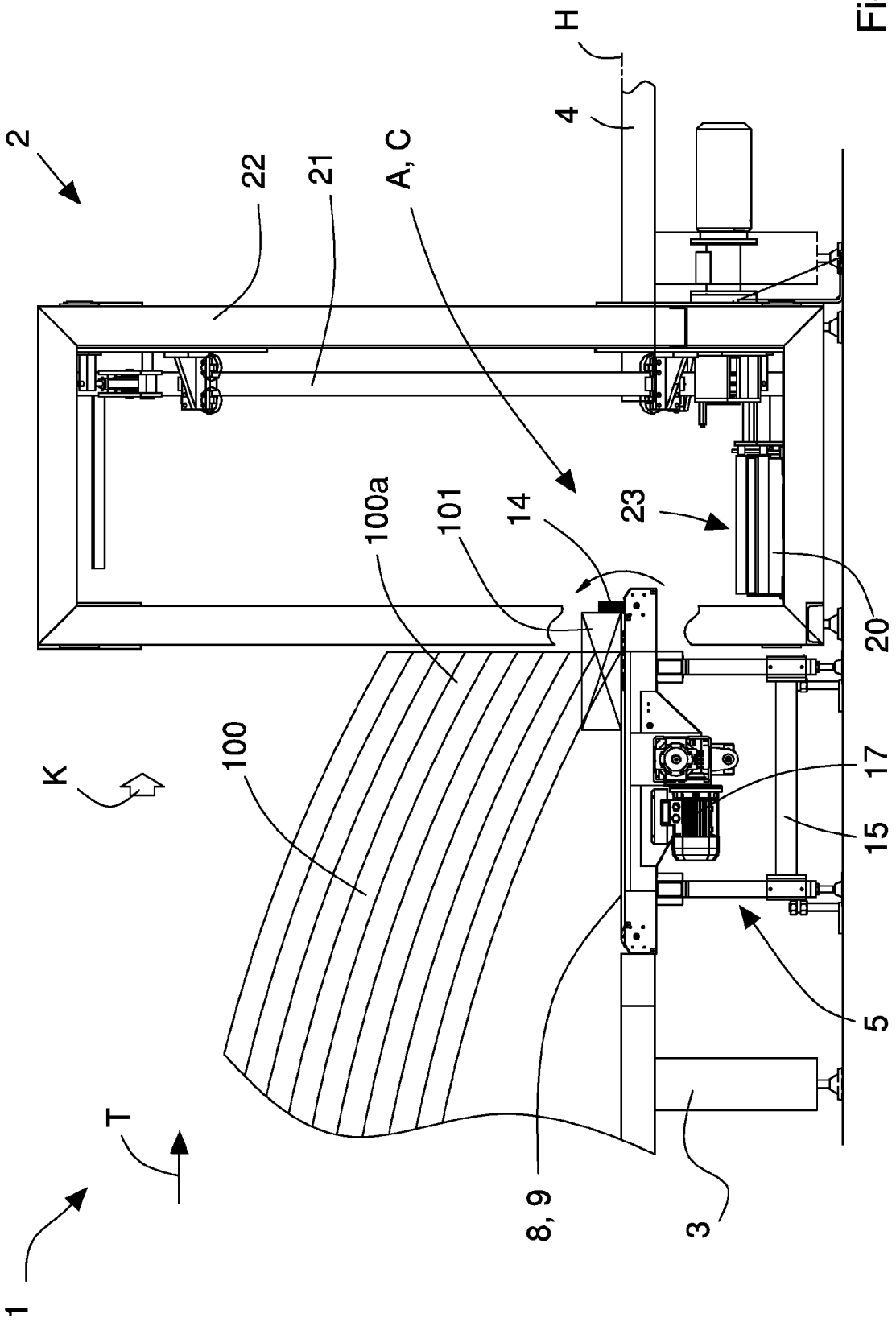


Fig. 2

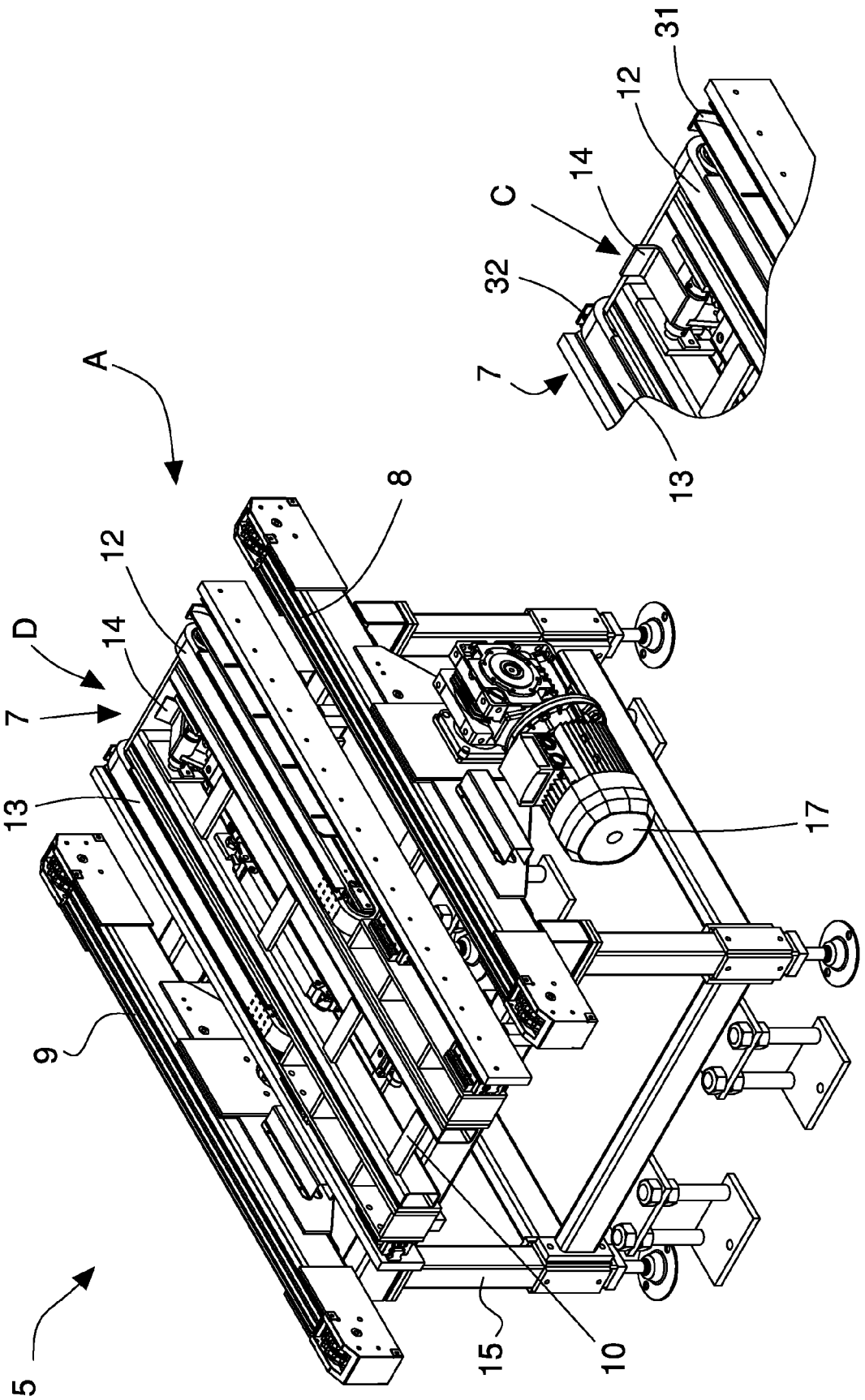


Fig. 3




Fig. 4

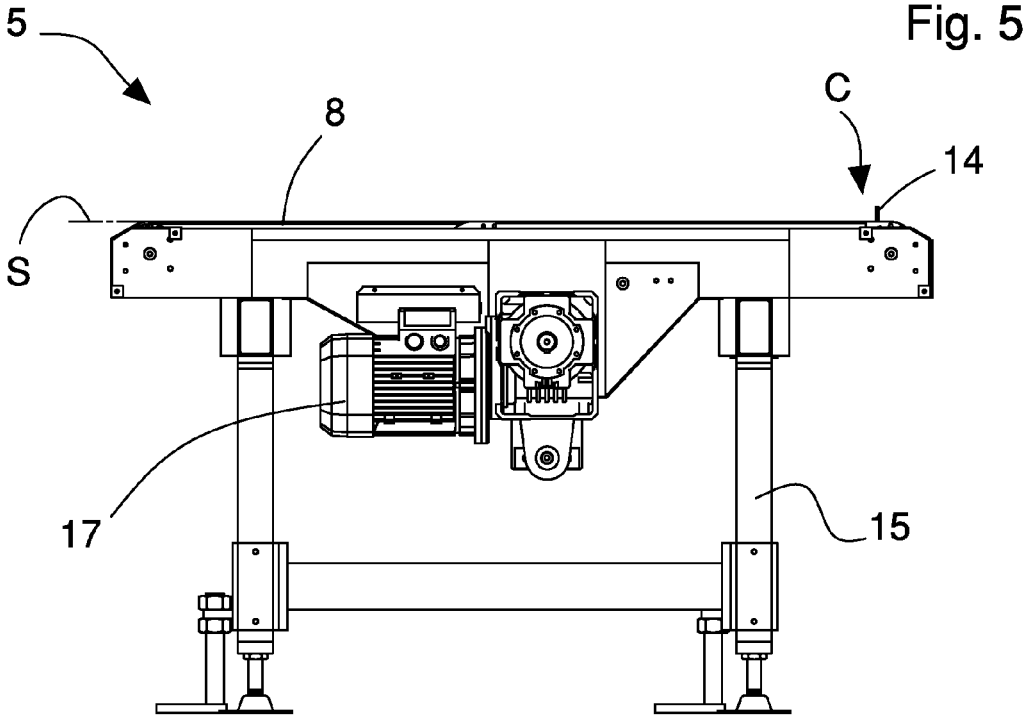


Fig. 5

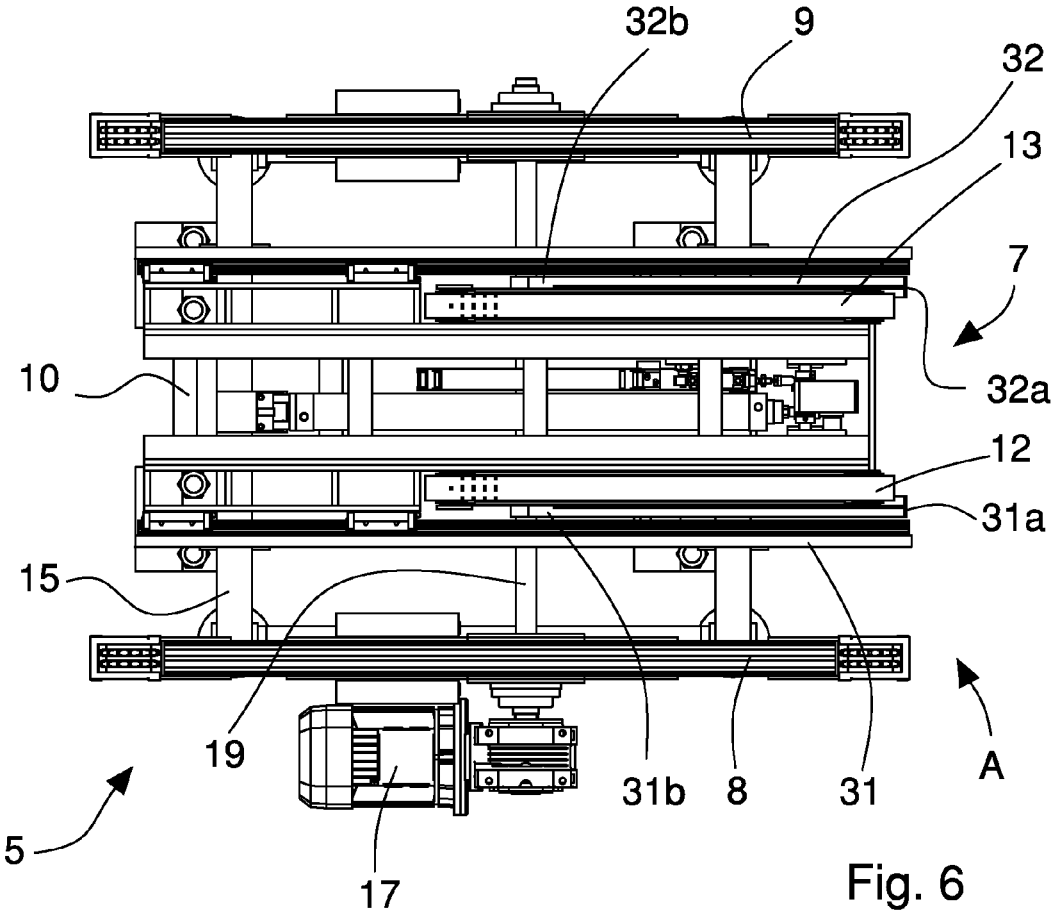


Fig. 6

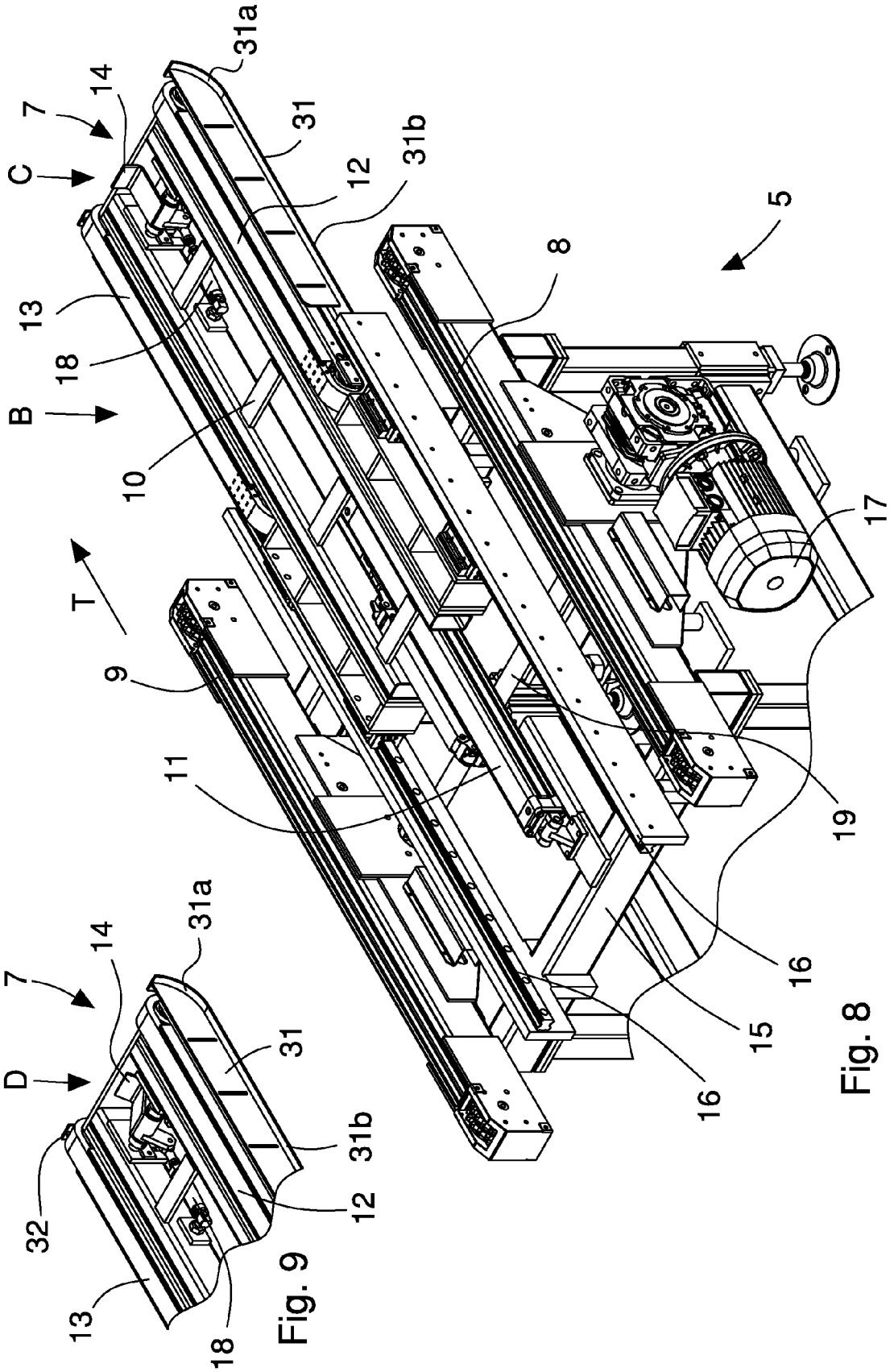
31a
14
7
C
31
12
31b
5
8
13
18
B
10
17
T
9
11
19
16
15
16
31a
14
7
31
D
31b
32
12
13
18

Fig. 8

Fig. 9

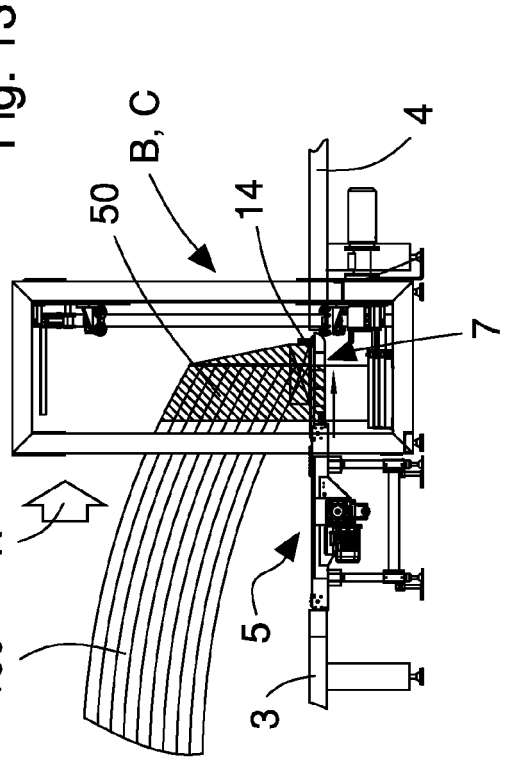


Fig. 13

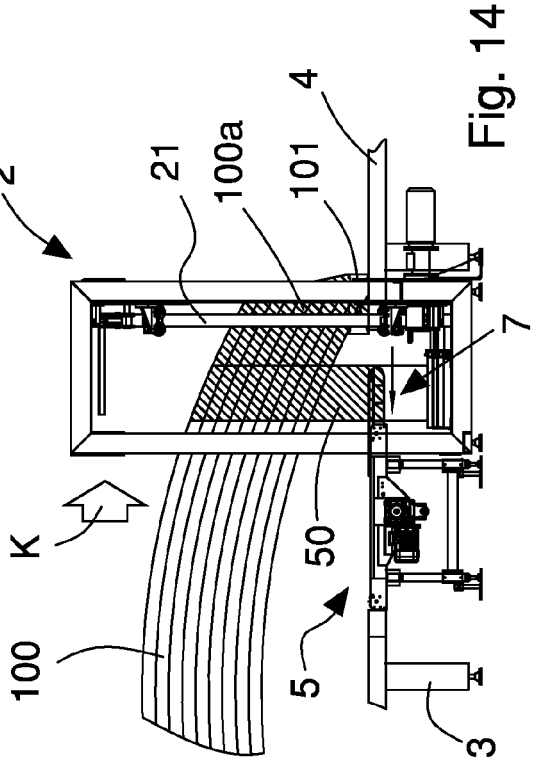


Fig. 14

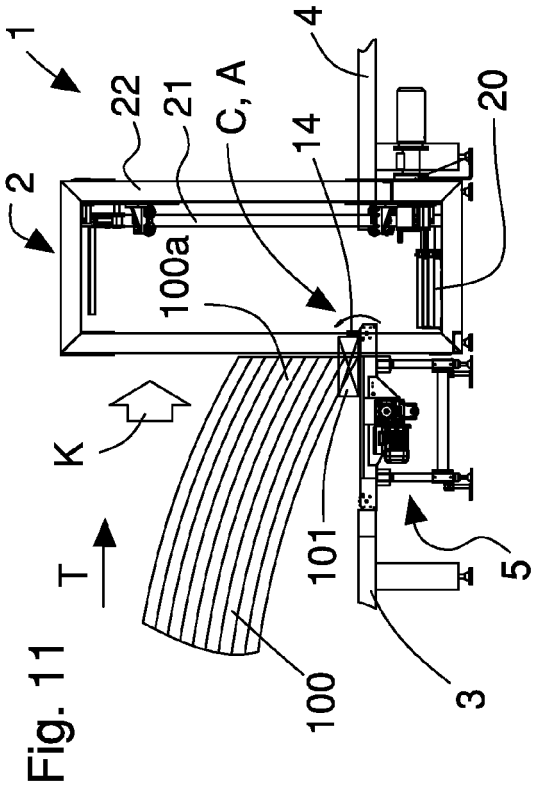


Fig. 11

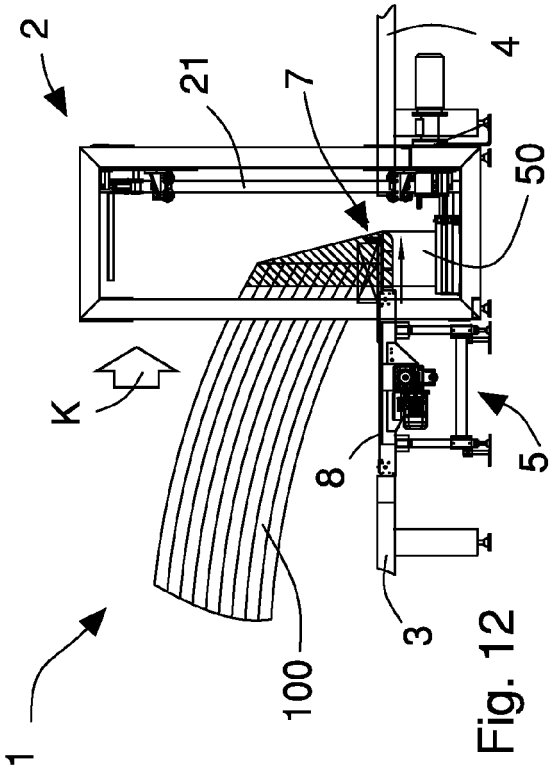


Fig. 12

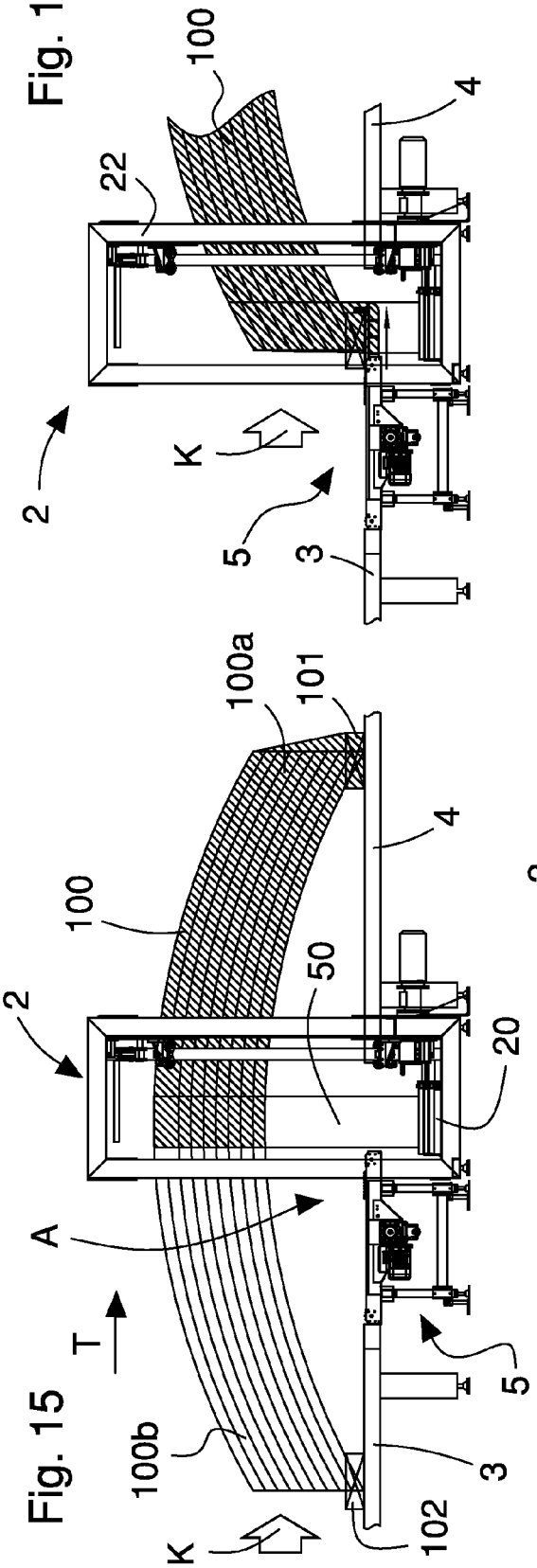


Fig. 15




Fig. 17

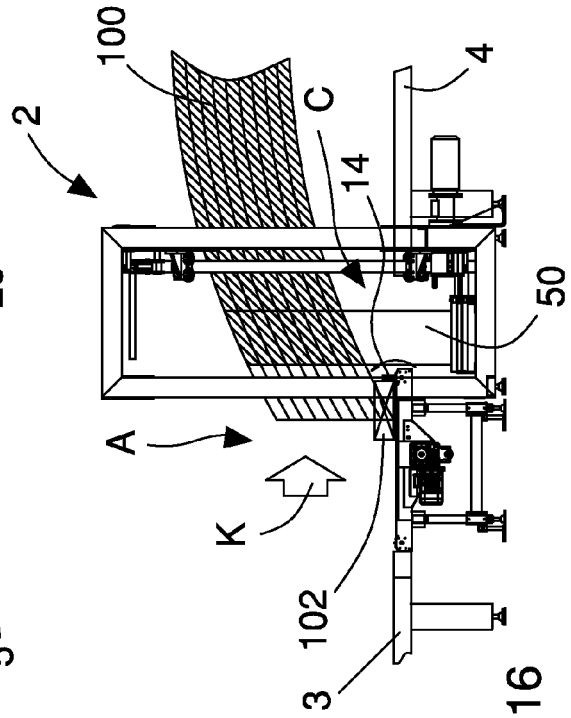


Fig. 16

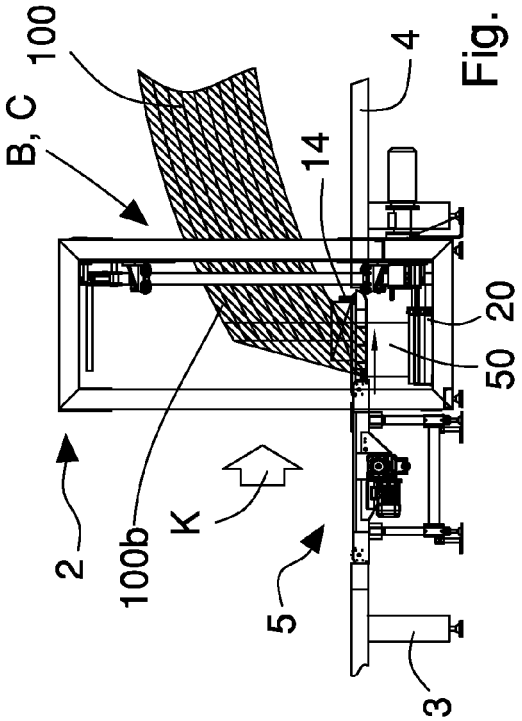


Fig. 18

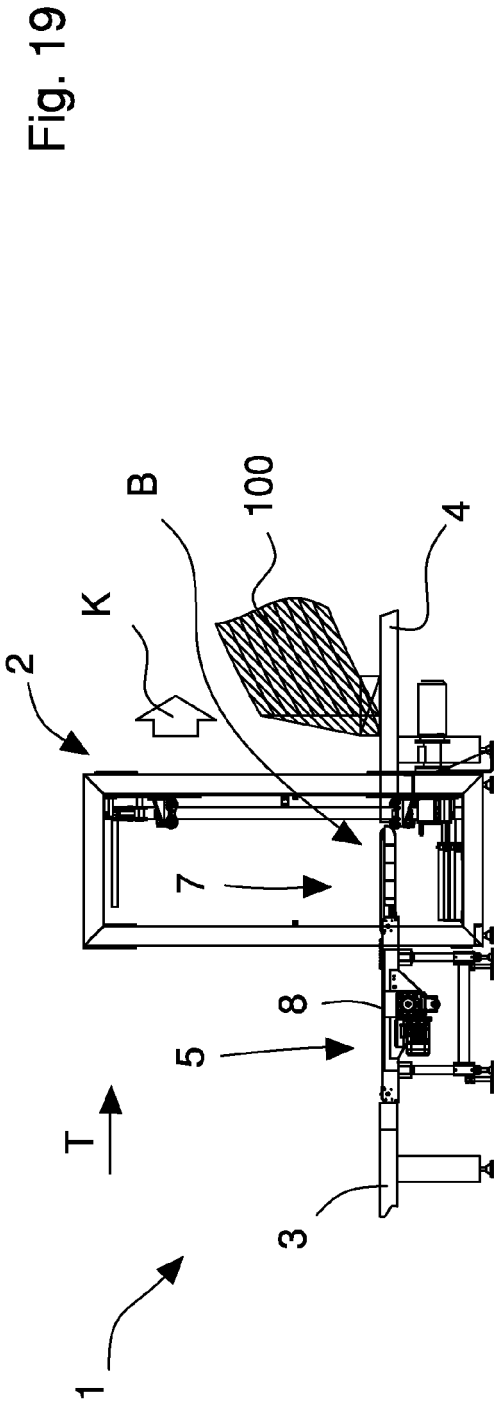
1
T
3
5
8
7
2
K
B
100
4

Fig. 19

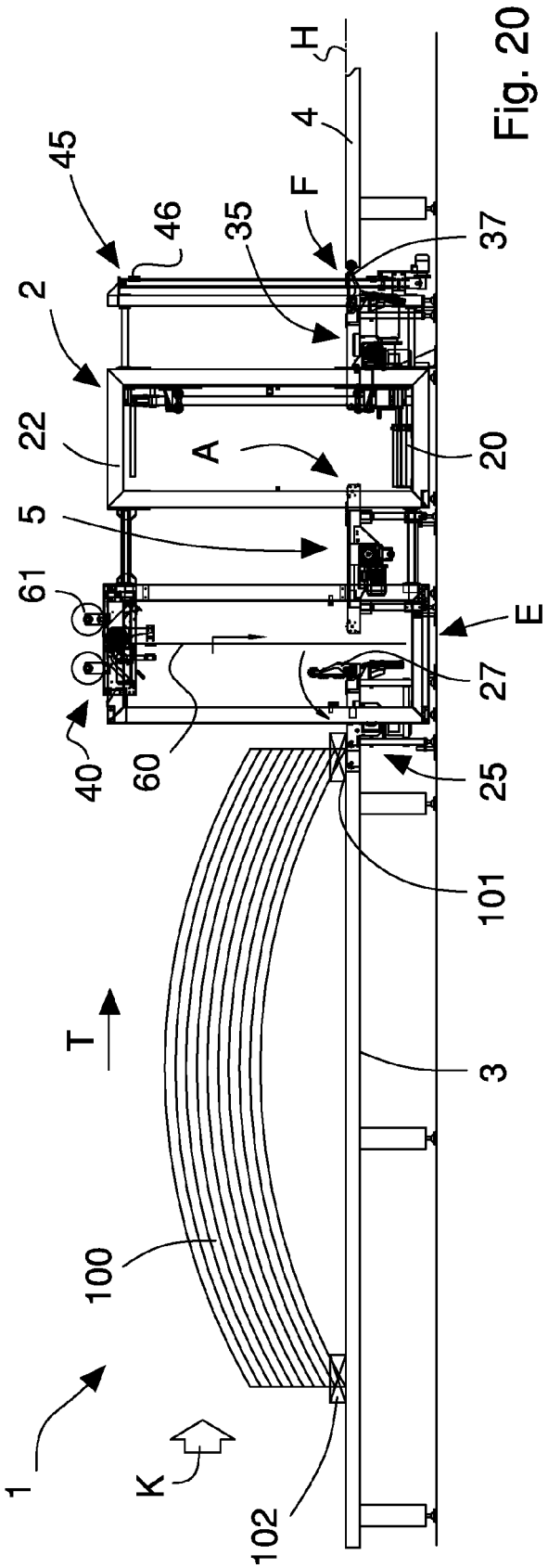
1
K
102
100
T
3
101
25
27
E
40
60
61
5
22
2
A
20
45
46
35
F
37
4
H

Fig. 20

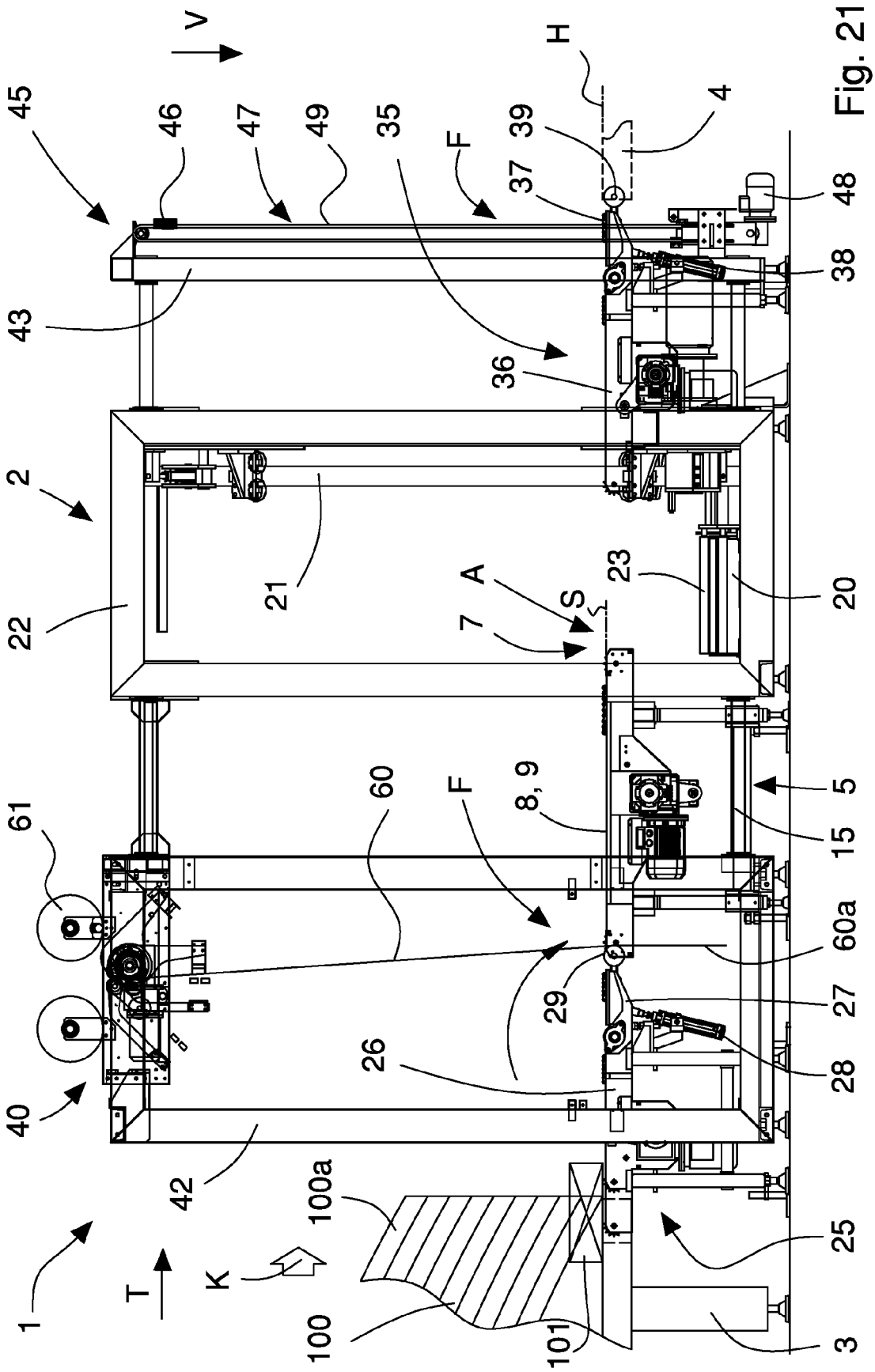
V
H
4
45
46
47
49
35
F
39
37
48
38
43
36
2
22
21
23
20
A
S
7
5
15
61
60
F
8, 9
60a
29
27
28
26
40
42
100a
25
1
T
K
100
101
3

Fig. 21

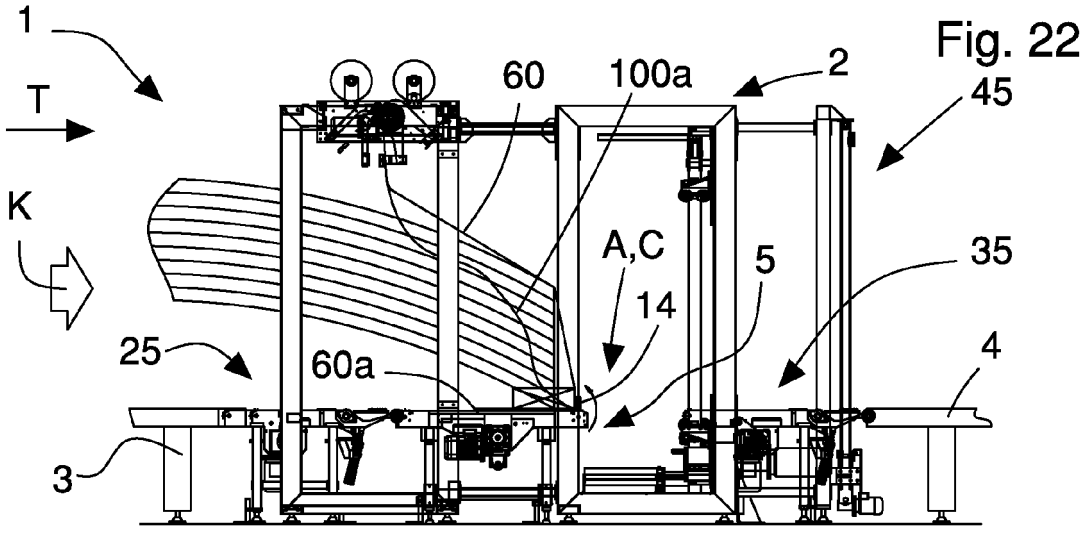


Fig. 22

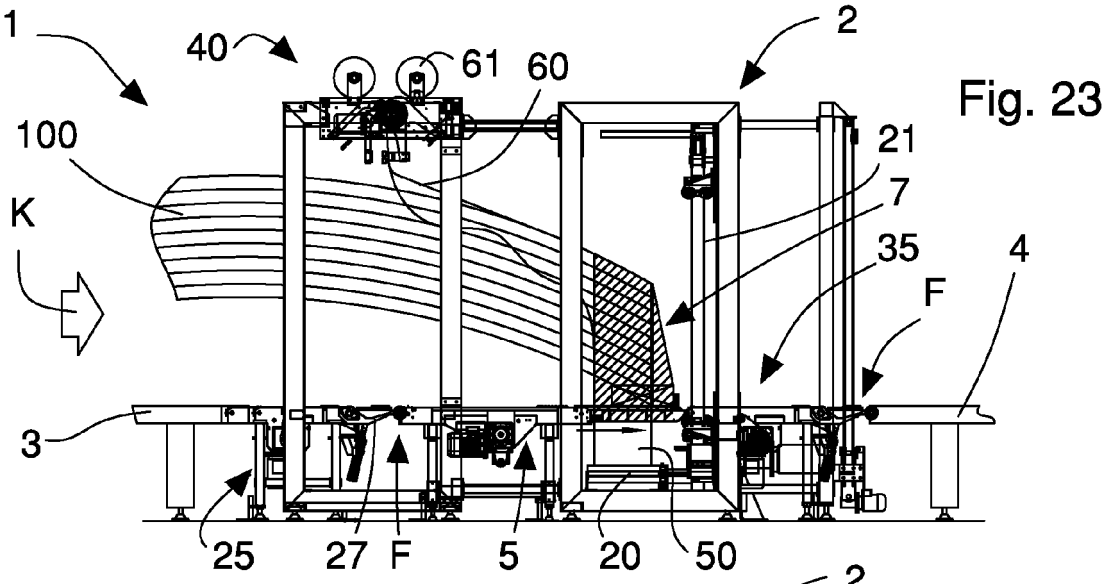


Fig. 23

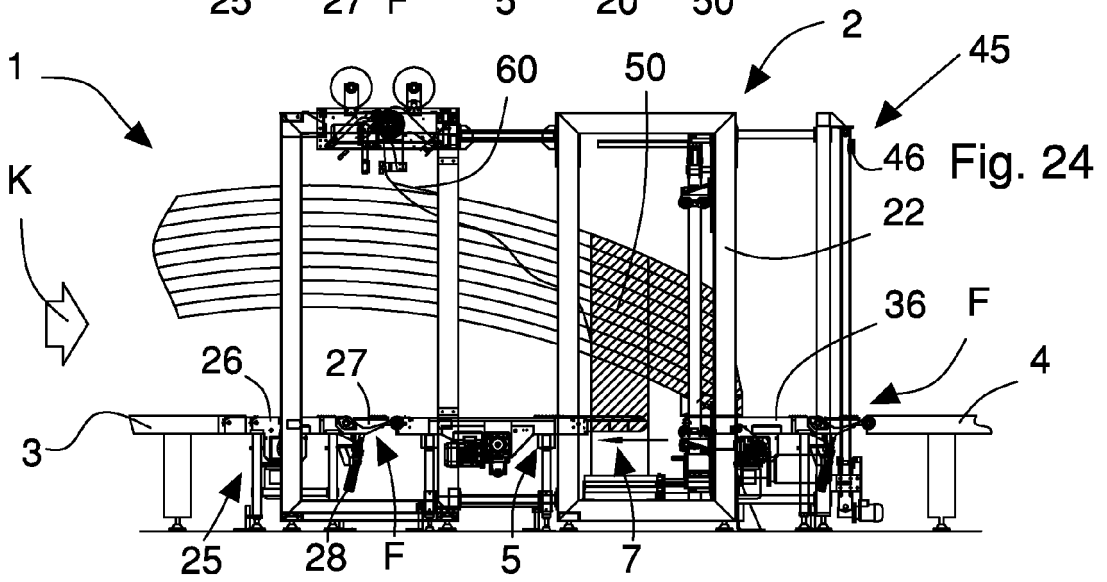


Fig. 24

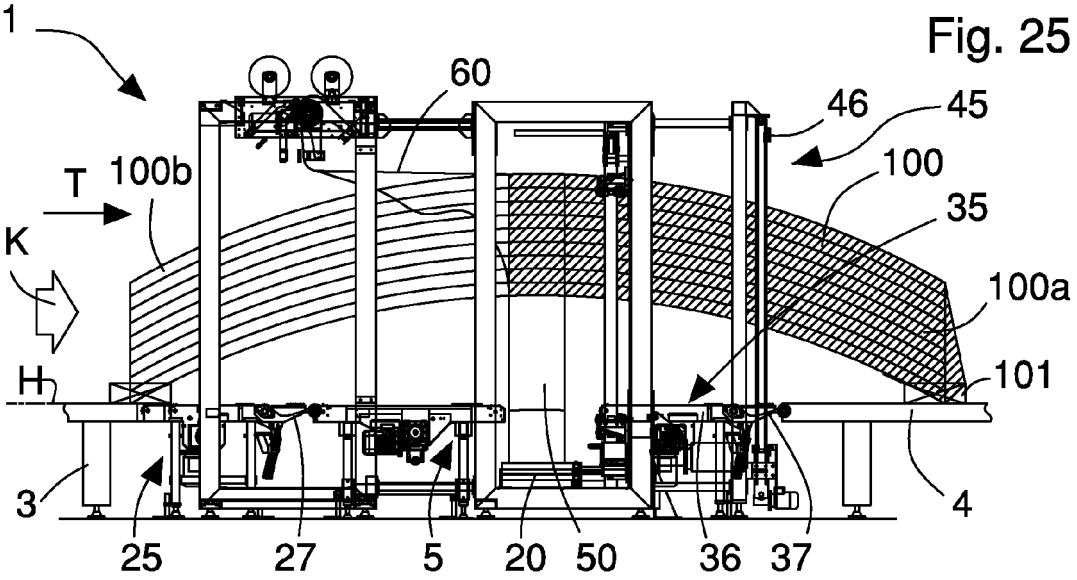


Fig. 25

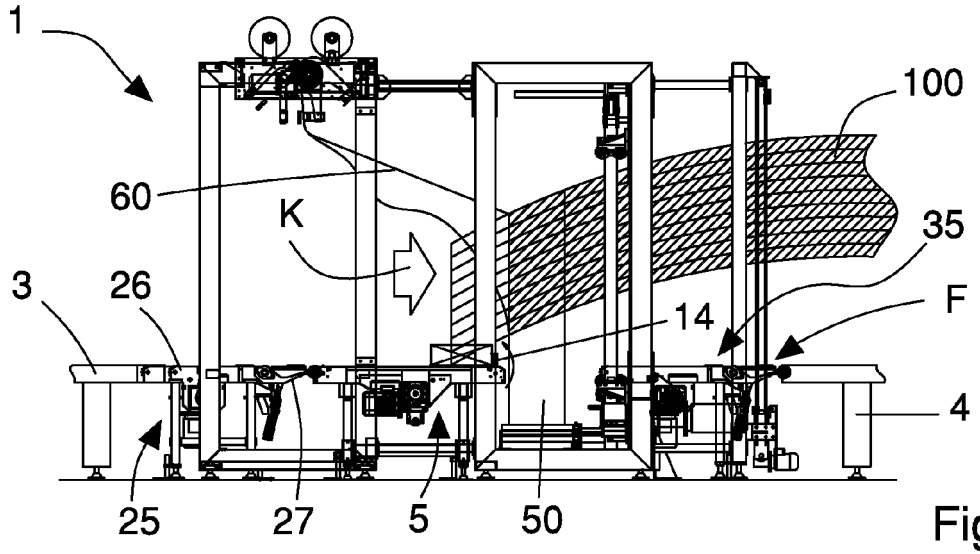


Fig. 26

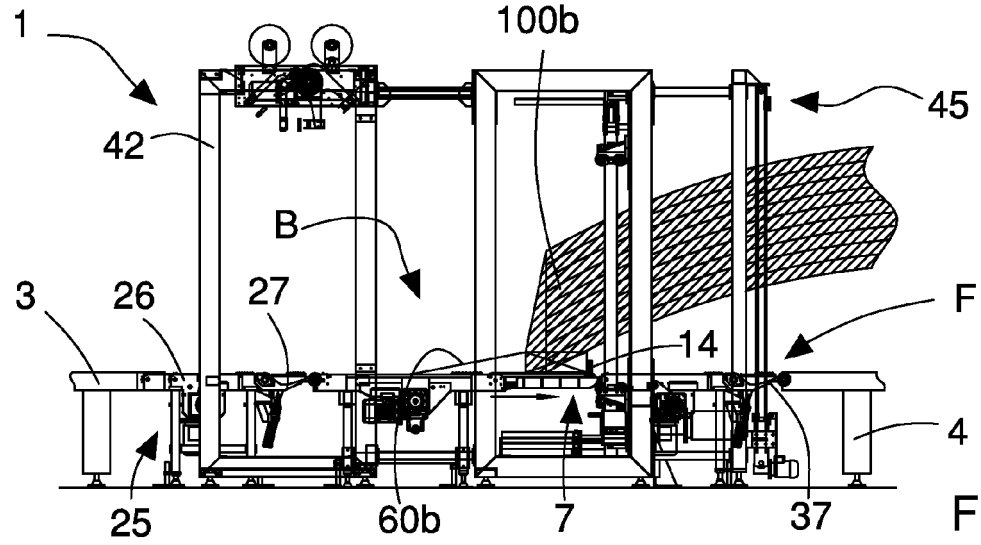


Fig. 27

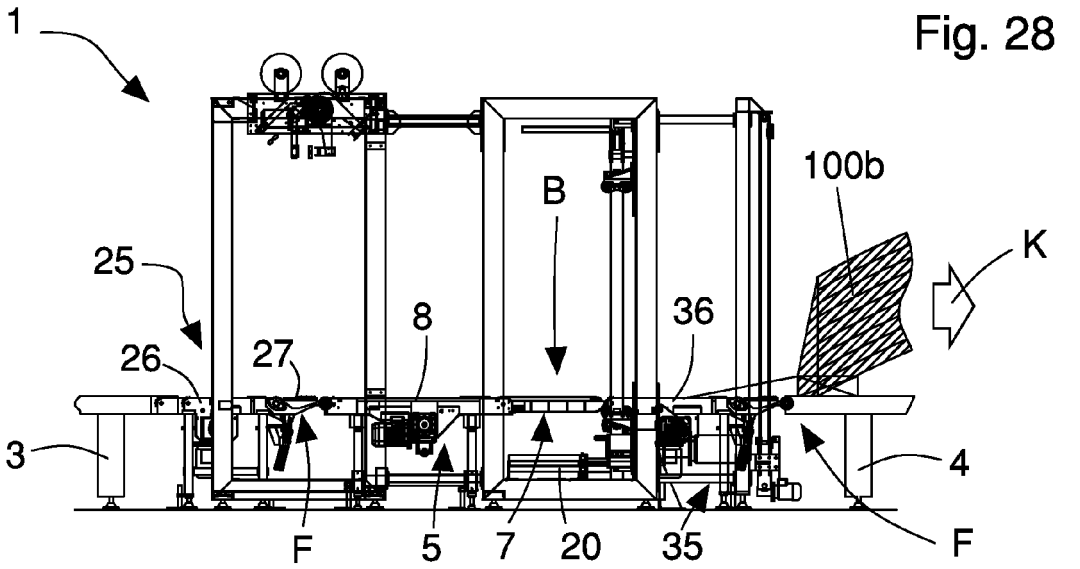


Fig. 28

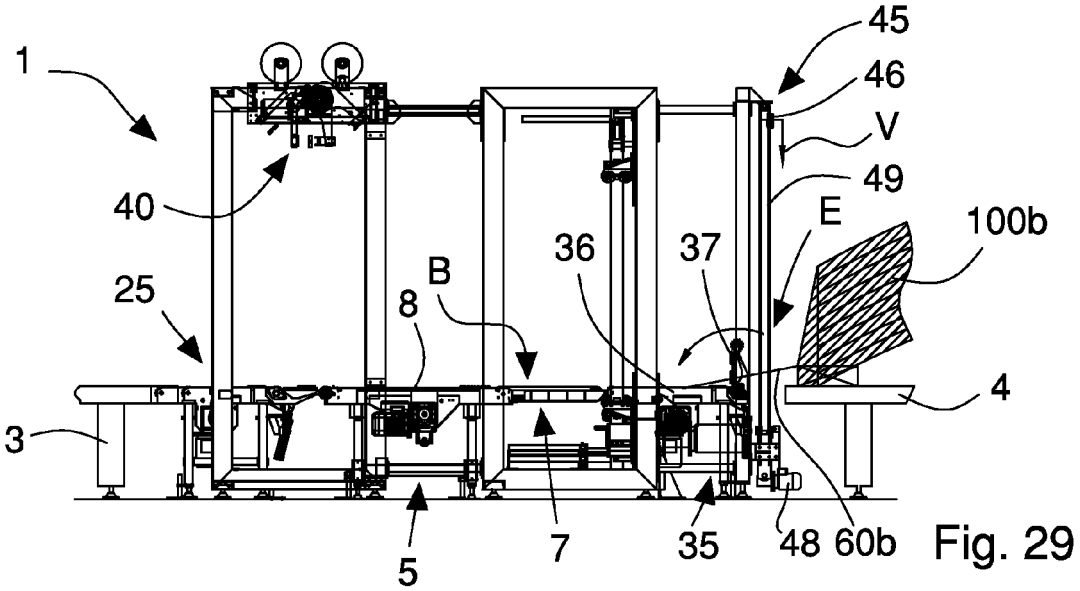


Fig. 29

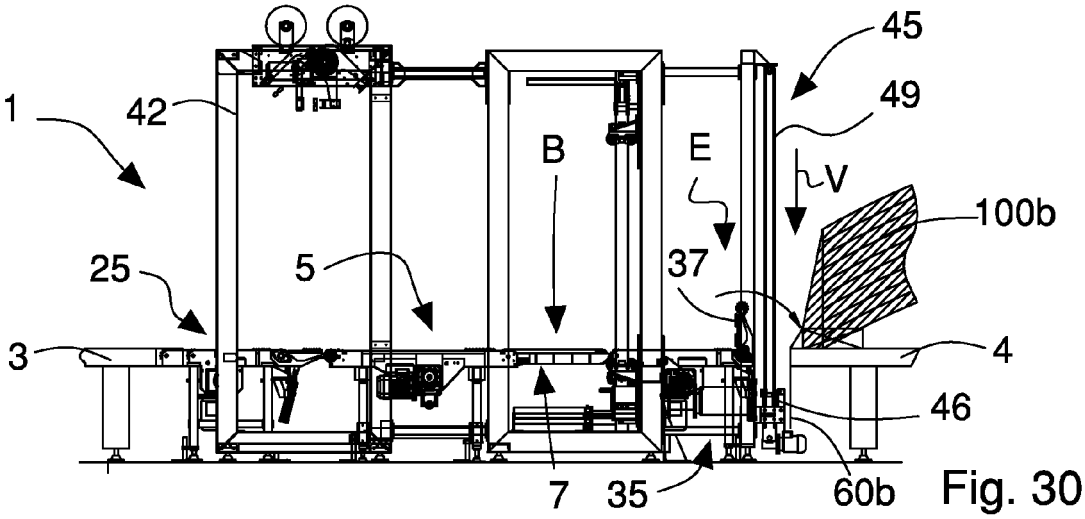


Fig. 30

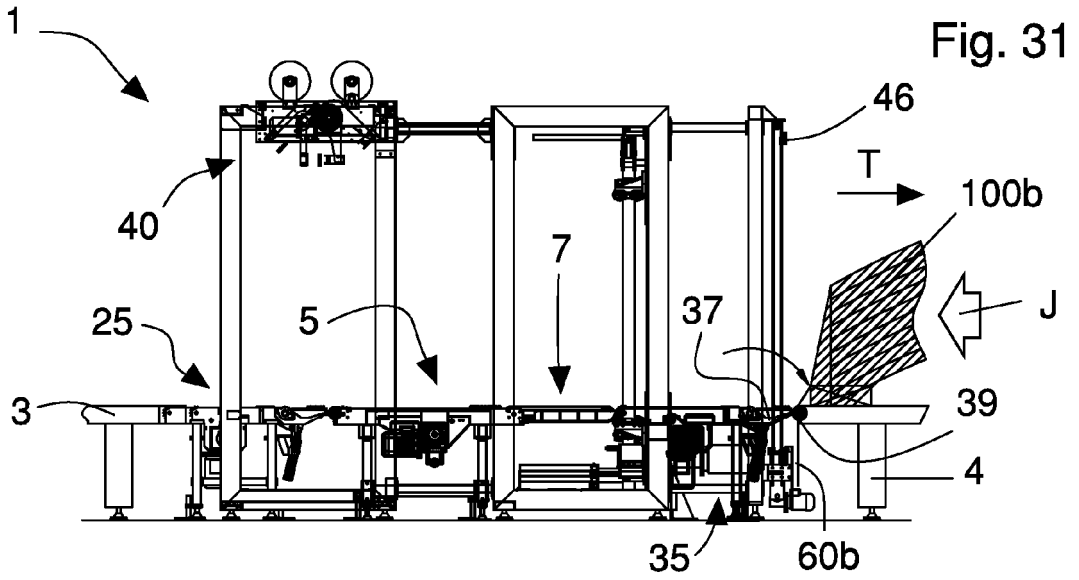


Fig. 31

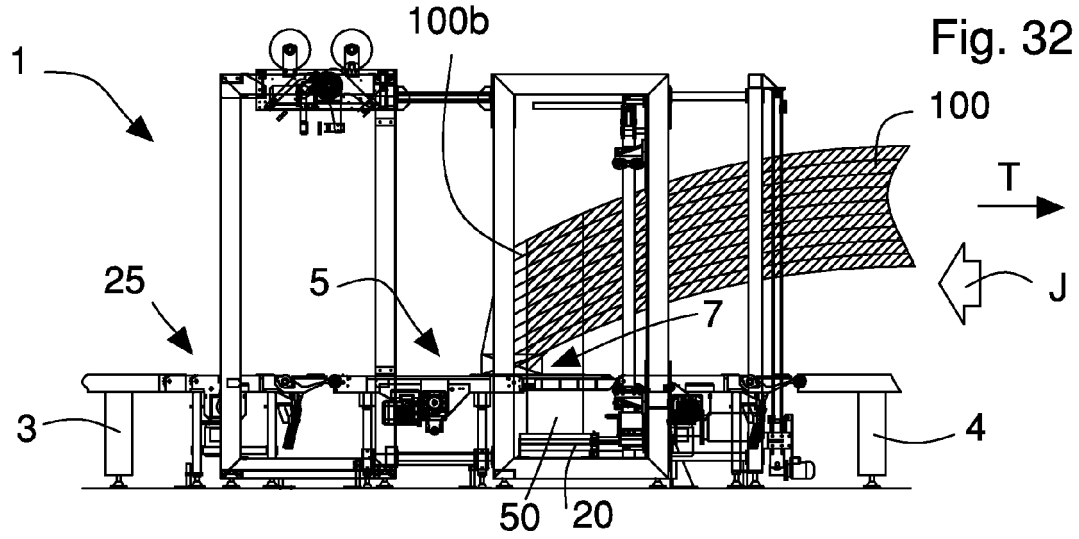


Fig. 32

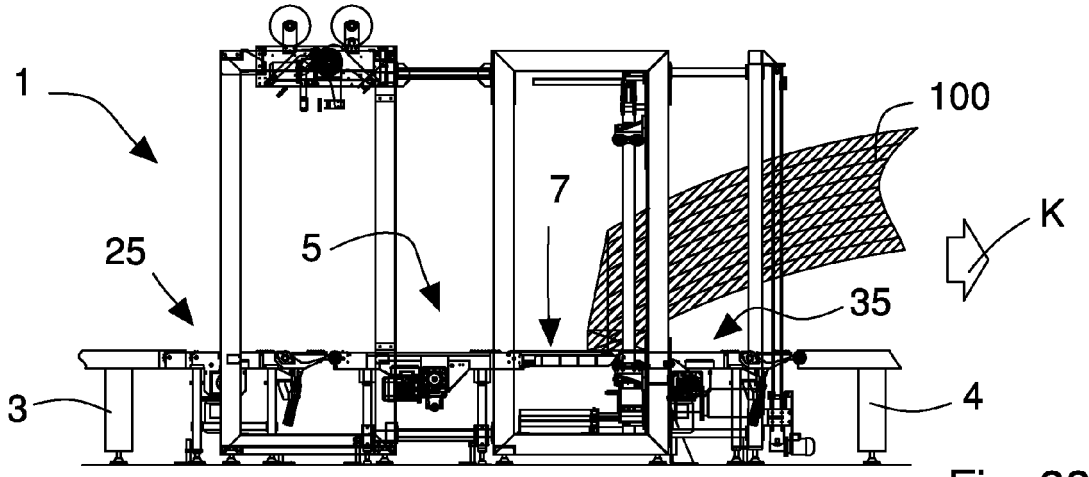


Fig. 33

Europäisches Patentamt
European Patent Office
Office européen des brevets

# EUROPEAN SEARCH REPORT

Application Number
EP 09 18 0430

## DOCUMENTS CONSIDERED TO BE RELEVANT

| Category | Citation of document with indication, where appropriate, of relevant passages | Relevant to claim | CLASSIFICATION OF THE APPLICATION (IPC) |
|---|---|---|---|
| A,D | US 4 524 568 A (LANCASTER PATRICK R [US] ET AL) 25 June 1985 (1985-06-25) * figures 1,2 * ----- | 1-18 | INV. B65B11/00 |
| A | US 2006/156694 A1 (AUBIN RUDY [FR] ET AL) 20 July 2006 (2006-07-20) * figures * ----- | 1-18 | |
| A | EP 1 132 298 A (BOEHL GMBH H [DE]) 12 September 2001 (2001-09-12) * figures * ----- | 1-18 | |

TECHNICAL FIELDS SEARCHED (IPC)

B65B

The present search report has been drawn up for all claims

1

| Place of search | Date of completion of the search | Examiner |
|---|---|---|
| Munich | 12 April 2010 | Lawder, M |

CATEGORY OF CITED DOCUMENTS

X : particularly relevant if taken alone
Y : particularly relevant if combined with another document of the same category
A : technological background
O : non-written disclosure
P : intermediate document

T : theory or principle underlying the invention
E : earlier patent document, but published on, or after the filing date
D : document cited in the application
L : document cited for other reasons
.....
& : member of the same patent family, corresponding document

EPO FORM 1503 03.82 (P04C01)

## ANNEX TO THE EUROPEAN SEARCH REPORT ON EUROPEAN PATENT APPLICATION NO. EP 09 18 0430

This annex lists the patent family members relating to the patent documents cited in the above-mentioned European search report.
The members are as contained in the European Patent Office EDP file on
The European Patent Office is in no way liable for these particulars which are merely given for the purpose of information.

12-04-2010

| Patent document cited in search report | | Publication date | Patent family member(s) | | | Publication date |
|---|---|---|---|---|---|---|
| US 4524568 | A | 25-06-1985 | CA | 1200752 | A1 | 18-02-1986 |
| | | | DE | 3330489 | A1 | 01-03-1984 |
| | | | GB | 2126187 | A | 21-03-1984 |
| US 2006156694 | A1 | 20-07-2006 | AT | 391076 | T | 15-04-2008 |
| | | | BR | PI0505504 | A | 12-09-2006 |
| | | | CA | 2529120 | A1 | 16-06-2006 |
| | | | CN | 1789086 | A | 21-06-2006 |
| | | | DE | 602005005770 | T2 | 30-04-2009 |
| | | | EP | 1671883 | A1 | 21-06-2006 |
| | | | FR | 2879565 | A1 | 23-06-2006 |
| | | | JP | 2006168833 | A | 29-06-2006 |
| | | | MX | PA05013463 | A | 19-06-2006 |
| EP 1132298 | A | 12-09-2001 | DE | 10110193 | A1 | 17-10-2002 |
| | | | DE | 20004058 | U1 | 05-07-2001 |

EPO FORM P0459

For more details about this annex : see Official Journal of the European Patent Office, No. 12/82

## REFERENCES CITED IN THE DESCRIPTION

*This list of references cited by the applicant is for the reader's convenience only. It does not form part of the European patent document. Even though great care has been taken in compiling the references, errors or omissions cannot be excluded and the EPO disclaims all liability in this regard.*

### Patent documents cited in the description


- US 4524568 A **[0009]**