(19) Europäisches Patentamt
European Patent Office
Office européen des brevets

(11) EP 2 214 273 A1

(12) **EUROPEAN PATENT APPLICATION**
published in accordance with Art. 153(4) EPC

(43) Date of publication:
04.08.2010 Bulletin 2010/31

(21) Application number: **09728227.1**

(22) Date of filing: **23.03.2009**

(51) Int Cl.:
H01T 13/20 *(2006.01)*

(86) International application number:
PCT/JP2009/055683

(87) International publication number:
WO 2009/122941 (08.10.2009 Gazette 2009/41)

(84) Designated Contracting States:
AT BE BG CH CY CZ DE DK EE ES FI FR GB GR HR HU IE IS IT LI LT LU LV MC MK MT NL NO PL PT RO SE SI SK TR
Designated Extension States:
AL BA RS

(30) Priority: **31.03.2008 JP 2008090118**

(71) Applicant: **NGK Spark Plug Co., Ltd.**
Nagoya-shi
Aichi 467-8525 (JP)

(72) Inventor: **The designation of the inventor has not yet been filed**

(74) Representative: **Zimmermann & Partner**
Isartorplatz 1
80331 München (DE)

(54) **SPARK PLUG**

(57) Provided is a spark plug with excellent vibration resistance performance and resistor load life-span characteristics, and a reduced diameter which is achieved by strengthening adhesion between a resistor and a conductive glass sealing layer. A resistor 18 and a center electrode 13 which are disposed in a through-hole 16 of an insulator 12 are joined by a conductive glass sealing layer 19 interposed therebetween. The diameter D of the conductive glass sealing layer 19 joined to the resistor 18 is equal to or greater than 1.9 mm and equal to or less than 3.3 mm ($1.9mm \leq D \leq 3.3mm$), a joining surface 23 of the conductive glass sealing layer 19 joined to the resistor 18 has a bowl shape, and Sa/S1 that can be obtained on the basis of a surface area Sa of the joining surface 23 and a cross-sectional area S 1 of the conductive glass sealing layer 19 is equal to or greater than 1.1 ($Sa/S1 \geq 1.1$).

FIG. 2

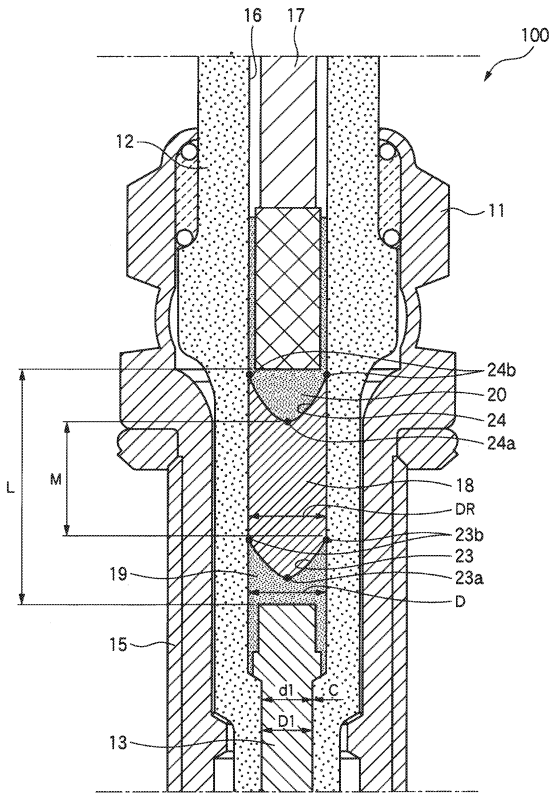

EP 2 214 273 A1

Description

Technical Field

[0001] The present invention relates to a spark plug used for an internal combustion engine, and more particularly, to a spark plug in which a resistor is mounted.

Background Art

[0002] In general, as a spark plug in which a resistor is mounted, there is one having a structure with a cylindrical insulator body, a through-hole formed inside the insulator along its axial direction, a terminal metal piece made of metal inserted through one end of the through-hole to be fixed thereto, a center electrode made of metal inserted through the other end thereof and fixed, and a resistor disposed between the terminal metal piece and the center electrode in the through-hole (for example, refer to Patent Document 1). The resistor is made of a mixture of glass powder and a conductive material such as carbon black powder or metal powder, however, the metal content is not that high. Accordingly, in many cases, a direct junction between the terminal metal piece made of metal and the center electrode is difficult. Therefore, generally, a configuration has been employed in which a conductive glass sealing layer made of a mixture from glass powder and a relatively large amount of metal powder is provided between them to enhance the joining force.

[0003] The spark plug having such a resistor is manufactured as follows. First, after inserting and fixing the center electrode to the through-hole of the insulator, the conductive glass powder is charged. Thereafter, the raw powder having the resistor composition is charged, the conductive glass power is charged again, and finally, the terminal metal piece is press-fitted from the opposite side to the center electrode, thereby obtaining an assembled unit. Next, the assembled unit is placed in a heating furnace and heated to above a glass softening temperature, and the terminal metal piece is pushed in the axial direction of the terminal metal piece so as to compact each layer. As described above, the conductive glass sealing layer on the resistor and the center electrode side and the conductive glass sealing layer on the terminal metal piece side are obtained. In addition, the terminal metal piece and the center electrode are joined to the resistor with the respective conductive glass sealing layers interposed therebetween and fixed to the insulator (hereinafter, the process for forming the layers is referred to as a "layer formation process").

[0004] The spark plug disclosed in Patent Document 1 is provided with a metal layer made of a specific material at a surface region of a portion which comes in contact with the conductive glass sealing layer of the terminal metal piece, and by increasing the joining force between the terminal metal piece and the conductive glass sealing layer, problems such as deterioration of the joining state are prevented.

[0005]

[Patent Document 1] JP-A-11-339925

Disclosure of the Invention

Problem that the Invention is to Solve

[0006] However, recently, in order to achieve an engine design with the ability to allow for high engine power outputs and high engine efficiencies by such means as the increasing of a valve diameter and the free processing a water jacket for more coolant, or in order to save space by reducing the engine itself, a reduction in diameter of the spark plug has been strongly required in terms of vehicle design. In order to realize this, a reduction in diameter of the insulator is inevitable.

However, in order to ensure voltage resistance performance and mechanical strength that are requirements of the insulator, a predetermined radial thickness is needed. Accordingly, the through-hole of the insulator, in other words, the diameters of the resistor and the conductive glass sealing layer have to be reduced.

[0007] However, when the diameter of the through-hole of the insulator is reduced, the sufficient charging of the conductive glass powder is difficult. Moreover, there is a tendency that mechanical strength between the resistor and the conductive glass sealing layer, and particularly, of the joining portion of the resistor and the conductive glass sealing layer is insufficient. Therefore, in some cases, when vibration or an impact is exerted on the spark plug from the engine, exfoliation occurs at the joining surface of the resistor and the conductive glass sealing layer, which does not occur in an existing spark plug where a through-hole has a diameter of about 3.9 mm, so that there are problems with electrical connection.

[0008] The spark plug disclosed in Patent Document 1 is provided with a metal layer made of a specific material at a surface region of the terminal metal piece and configured to prevent deterioration of a joining state or the separation of the terminal metal piece by increasing the joining force between the terminal metal piece and the conductive glass

sealing layer. Therefore, it is associated with a different technique from that of the invention which has an object to reduce the diameter of the spark plug.

[0009] In order to solve the above-mentioned problems, it is an object of the invention to provide a spark plug with excellent vibration resistance performance and resistor load life-span characteristics and a reduced diameter which is achieved by strengthening adhesion between a resistor and a conductive glass sealing layer.

Means for Solving the Problem

[0010] The object of the present invention is solved by the spark plug having the following structure.

(1) A spark plug comprising:

a cylindrical metal shell;
an insulator which has a through-hole formed inside the insulator along an axial direction of the metal shell and is held in the metal shell so as to be exposed from the metal shell;
a center electrode which is inserted into and fixed to one end portion of the through-hole;
a terminal metal piece which is inserted into and fixed to the other end portion of the through-hole;
a resistor which is provided between the center electrode and the terminal metal piece in the through-hole and distant from the center electrode in the axial direction;
a conductive glass sealing layer which is provided between the resistor and the center electrode in the through-hole without a gap; and
a ground electrode which is electrically connected to the metal shell and configured such that a predetermined spark discharge gap is formed between its front end portion and the center electrode,
wherein
a diameter D of the conductive glass sealing layer is equal to or less than 3.3 mm, and
a joining surface of the conductive glass sealing layer and the resistor is a curved surface.

(2) The spark plug according to the above (1),
wherein
the diameter D of the conductive glass sealing layer is in the range of not less than 1.9 mm and less than 3.0 mm.

(3) The spark plug according to the above (1) or (2),
wherein, assuming that a surface area of the joining surface is Sa and an area of a cross-section of the conductive glass sealing layer, which is perpendicular to the axial direction and includes edge portions of the joining surface, is S1, Sa/S1 is equal to or greater than 1.1.

(4) The spark plug according to any one of the above (1) to (3),
wherein, assuming that a surface area of the joining surface is Sa and an area of a cross-section of the conductive glass sealing layer, which is perpendicular to the axial direction and includes edge portions of the joining surface, is S1, Sa/S1 is equal to or greater than 1.5.

(5) The spark plug according to any one of the above (1) to (4),
wherein
a radial cross-section of the through-hole is circular,
a distance L in the axial direction between the center electrode and the terminal metal piece is equal to or less than 16 mm,
assuming that a maximum diameter of the resistor is DR and a shortest distance in the axial direction of a portion of the resistor which is provided in the through-hole without a gap is M, DR^2/M is equal to or less than 2.2.

(6) The spark plug according to any one of the above (1) to (5),
wherein
the terminal metal piece and the resistor are distant from each other,
a second conductive glass sealing layer is provided between the terminal metal piece and the resistor in the through-hole without a gap, and
a second joining surface of the resistor and the second conductive glass sealing layer is a curved surface such that an apex thereof faces the center electrode.

(7) The spark plug according to the above (6),
wherein, assuming that a surface area of the second joining surface is Sb and an area of a cross-section of the second conductive glass sealing layer, which is perpendicular to the axial direction and includes edge portions of the second joining surface, is S2, Sb/S2 is equal to or greater than 1.1.

(8) The spark plug according to the above (6) or (7),
wherein, assuming that a surface area of the second joining surface is Sb and an area of a cross-section of the

second conductive glass sealing layer, which is perpendicular to the axial direction and includes edge portions of the corresponding joining surface, is S2, Sb/S2 is equal to or greater than 1.5.

(9) The spark plug according to any one of the above (1) to (8),
wherein
the conductive glass sealing layer is formed of a mixture containing glass powder and metal powder,
the resistor is formed of a mixture containing glass powder, ceramic powder, and nonmetal conductive powder, and
the compositions of the glass powder contained in the conductive glass sealing layer and the glass powder contained in the resistor are different from each other.

(10) The spark plug according to any one of the above (1) to (9),
wherein
a male thread for mounting, which is formed on the metal shell to be mounted to an opponent member, is equal to or less than M10.

[0011] In the configuration (1), the resistor and the center electrode are joined by the conductive glass sealing layer interposed therebetween. Since the diameter D of the conductive glass sealing layer joined to the resistor is equal to or smaller than 3.3 mm ($D \leq 3.3$mm) and the joining surface of the resistor is a curved surface, the area of the joining surface of the conductive glass sealing layer and the resistor can be widened even though the diameter D of the conductive glass sealing layer is reduced. Accordingly, the joining force of the joining surface can be increased to be equal to or greater than that in the existing case. Therefore, problems such as exfoliation or connection failure at the joining surface caused by vibration or an impact exerted on the spark plug can be prevented, thereby enhancing reliability of the spark plug. In addition, due to the small diameter of the spark plug, the degree of freedom in engine design can be increased, and a reduction in diameter can be achieved. In addition, the joining surface may have any shape as long as it has a curved surface shape, and for example, a curved surface having a bowl shape, a curved shape having plural convexes and concaves, and a wave-shaped curved surface may be employed.

In the configuration (2), since the diameter D of the conductive glass sealing layer is in the range of not less than 1.9 mm and less than 3.0 mm ($1.9\text{ mm} \leq D < 3.0$mm), the diameter of the spark plug can further be reduced. In addition, the degree of freedom in engine design can further be increased, and a reduction in diameter can be achieved.

In the configuration (3), assuming that the surface area of the joining surface of the conductive glass sealing layer and the resistor is Sa and the cross-sectional area of the conductive glass sealing layer is S1, Sa/S1 is equal to or greater than 1.1 ($Sa/S1 \geq 1.1$). Therefore, though the diameter D of the conductive glass sealing layer is small, the area of the joining surface of the conductive glass sealing layer and the resistor can be increased, so that the joining force can be increased to be equal to or greater than that in the existing case. In order to further increase the joining force, the configuration (4) may be employed, that is, the configuration in which Sa/S1 is equal to or greater than 1.5 ($Sa/S1 \geq 1.5$). Accordingly, problems such as exfoliation and connection failure at the joining portion can be prevented, so that the spark plug having high reliability can be provided.

In the configuration (5), assuming that the maximum diameter of the resistor is DR and the axial shortest length (a portion of the resistor which is provided without a gap) of the resistor is M, DR^2/M is equal to or smaller than 2.2 ($DR^2/M \leq 2.2$). Therefore, with regard to wave noises that are generally caused by a high voltage spark between electrodes, the generation of the wave noises are suppressed by the resistor, so that an influence of the wave noises on an acoustic device such as a radio or a computer mounted in a vehicle can be suppressed. In addition, since the axial distance L between the center electrode and the terminal metal piece is equal to or smaller than 16 mm ($L \leq 16$mm), in the spark plug of which the resistor has a small diameter of 3 mm or less, the influence on the joining surface of the conductive glass sealing layer and the resistor caused by the vibration and the impact of the spark plug can be prevented for a long period of time. Therefore, the spark plug which is small and has a long life-span can be provided.

In the configuration (6), since the second joining surface of the resistor and the second conductive glass sealing layer is a curved surface, the area of the second joining surface of the second conductive glass sealing layer and the resistor can be increased. Accordingly, even when the diameter of the second conductive glass sealing layer is small, the joining force of the second conductive glass sealing layer and the resistor can be increased to be equal to or greater than that in the existing case. Therefore, the problems such as exfoliation and connection failure in the second joining portion caused by the vibration and the impact exerted on the spark plug can be prevented, thereby enhancing the reliability of the spark plug.

In the configuration (7), assuming that the surface area of the second joining surface of the second conductive glass sealing layer and the resistor is Sb and the cross-sectional area of the second conductive glass sealing layer is S2, Sb/S2 is equal to or greater than 1.1 ($Sb/S2 \geq 1.1$). Therefore, even though the diameter of the second conductive glass sealing layer is small, the area of the second joining surface of the second conductive glass sealing layer and the resistor is wide. Accordingly, the joining force at the joining surface can be increased to be equal to or greater than that in the existing case. In order to further increase the joining force, the configuration (8) may be employed, that is, the configuration in which Sb/S2 is equal to or greater than 1.5 ($Sb/S2 \geq 1.5$). Therefore, the problems such as exfoliation and connection

failure in the joining portion can be prevented, so that the spark plug having high reliability can be provided.
In the configuration (9), the conductive glass sealing layer is formed from the mixture of glass powder and metal powder, and the resistor is formed from the mixture of glass powder, ceramic powder, and nonmetal conductive powder. In addition, since the compositions of the glass powder contained in the conductive glass sealing layer and the glass powder contained in the resistor are different from each other, the conductive glass sealing layer and the resistor can be strongly joined to each other. Accordingly, the spark plug can be provided which has excellent vibration resistance and impact resistance and a long life-span.
In the configuration (10), since the male thread for mounting which is formed in the metal shell to be mounted to an opponent member such as an engine is equal to or smaller than M10, the effects of the spark plug according to the invention, in which the insulator, the electrode, the resistor, and the conductive glass sealing layer have small diameters, can be significantly exhibited.

Advantage of the Invention

[0012] According to the invention, adhesion between the resistor and the conductive glass sealing layer can be strengthened, so that the spark plug can be provided with excellent vibration resistance performance and resistor load life-span characteristics and a reduced diameter.

Brief Description of the Drawings

[0013]

[Fig. 1] Fig. 1 is a sectional view of a spark plug according to the invention.
[Fig. 2] Fig. 2 is an enlarged view of a main section of the spark plug of Fig. 1.
[Fig. 3] Fig. 3 is a conceptual view showing the comparison between values of Sa/S1 obtained by using the surface area Sa and the cross-sectional area S1 of a joining surface when the diameter of a conductive glass sealing layer and the shape of the joining surface are changed.

Description of Reference Numerals and Signs

[0014]

11: METAL SHELL
12: INSULATOR
12a, 12b: BOTH ENDS OF INSULATOR
13: CENTER ELECTRODE
13a: FRONT END PORTION OF CENTER ELECTRODE
14: GROUND ELECTRODE
14a: ONE END PORTION OF GROUND ELECTRODE
14b: THE OTHER END PORTION OF GROUND ELECTRODE
14c: INTERMEDIATE PORTION OF GROUND ELECTRODE
15: MALE THREAD
16: THROUGH-HOLE
16a: ONE END PORTION OF THROUGH-HOLE
16b: THE OTHER END PORTION OF THROUGH-HOLE
17: TERMINAL METAL PIECE
17a: FRONT END PORTION OF TERMINAL METAL PIECE
18: RESISTOR
19: FIRST CONDUCTIVE GLASS SEALING LAYER
20: SECOND CONDUCTIVE GLASS SEALING LAYER
23: JOINING SURFACE OF FIRST CONDUCTIVE GLASS SEALING LAYER AND RESISTOR
23a: APEX OF JOINING SURFACE OF FIRST CONDUCTIVE GLASS SEALING LAYER AND RESISTOR
23b: EDGE PORTION OF JOINING SURFACE OF FIRST CONDUCTIVE GLASS SEALING LAYER AND RESISTOR
24: JOINING SURFACE OF SECOND CONDUCTIVE GLASS SEALING LAYER AND RESISTOR (SECOND JOINING SURFACE)
23a: APEX OF JOINING SURFACE OF SECOND CONDUCTIVE GLASS SEALING LAYER AND RESISTOR
23b: EDGE PORTION OF JOINING SURFACE OF SECOND CONDUCTIVE GLASS SEALING LAYER AND RE-

SISTOR
100: SPARK PLUG
D; DIAMETER OF CONDUCTIVE GLASS SEALING LAYER
DR: DIAMETER OF RESISTOR
L: AXIAL DISTANCE BETWEEN CENTER ELECTRODE AND TERMINAL METAL PIECE
M: AXIAL LENGTH OF PORTION OF RESISTOR WHICH IS PROVIDED IN THROUGH-HOLE WITHOUT GAP
Sa: SURFACE AREA OF JOINING SURFACE OF FIRST CONDUCTIVE GLASS SEALING LAYER AND RESISTOR
Sb: SURFACE AREA OF JOINING SURFACE OF SECOND CONDUCTIVE GLASS SEALING LAYER AND RESISTOR (SURFACE AREA OF SECOND JOINING SURFACE)
S1: AREA OF CROSS-SECTION OF FIRST CONDUCTIVE GLASS SEALING LAYER WHICH IS PERPENDICULAR TO AXIAL DIRECTION AND INCLUDES EDGE PORTION OF JOINING SURFACE
S2: AREA OF CROSS-SECTION OF SECOND CONDUCTIVE GLASS SEALING LAYER WHICH IS PERPENDICULAR TO AXIAL DIRECTION AND INCLUDES EDGE PORTION OF JOINING SURFACE
g: SPARK DISCHARGE GAP

Best Mode for Carrying Out the Invention

[0015] Hereinafter, exemplary embodiments of a spark plug according to the invention will be described with reference to the accompanying drawings.
Fig. 1 is a sectional view of a spark plug according to the invention. Fig. 2 is an enlarged view illustrating the main part of the spark plug of Fig. 1.

[0016] As illustrated in Figs. 1 and 2, the spark plug 100 according to the invention includes a cylindrical metal shell 11, an insulator 12 which has a through-hole 16 formed inside the insulator 12 along the axial direction of the metal shell 11 and is inserted into the metal shell 11 such that both end portions 12a and 12b are exposed from the metal shell 11, a center electrode 13 which is inserted into and fixed to one end portion 16a (the lower side in the figure) of the through-hole 16 such that a front end portion 13a thereof is exposed, a terminal metal piece 17 which is inserted into and fixed to the other end portion 16b (the upper side in the figure) of the through-hole 16 such that a rear end portion 17a thereof is exposed, a resistor 18 which is provided between the center electrode 13 and the terminal metal piece 17 in the through-hole 16 and distant from each of the center electrode 13 and the terminal metal piece 17 in the axial direction, a first conductive glass sealing layer 19 which is provided between the resistor 18 and the center electrode 13 in the through-hole 16 without any gap, a second conductive glass sealing layer 20 which is provided between the resistor 18 and the terminal metal piece 17 in the through-hole 16 without any gap, and a substantially L-shaped ground electrode 14 of which one end portion (base portion) 14a is joined to the metal shell 11 by resistance welding or the like and of which an intermediate portion 14c is bent such that the other end portion 14b is opposed to the front end portion 13a of the center electrode 13.
In the following description, with respect to the axial direction of the metal shell 11, the side on which the center electrode 13 is disposed is referred to as a front side, and the opposite side (the side on which the terminal metal piece is disposed) is referred to as a rear side.

[0017] The metal shell 11 is made of carbon steel, and a male thread 15 for mounting, which is to be mounted to a cylinder head (opponent member) of an internal combustion engine such as an engine, is formed on the outer peripheral surface of the metal shell 11 along the peripheral direction. The female thread 15 is set to be equal to or smaller than M10 for a reduction in diameter.
The insulator 12 is formed of a ceramic fired body such as alumina.

[0018] The through-hole 16 is formed such that radial cross-sections thereof have substantially uniform, circular shapes in the axial direction, and the inside diameter of the through-hole 16 is set to be in the range of 1.9 to 3.3 mm. Accordingly, the diameter D of the first and second conductive glass sealing layers 19 and 20 are set to be in the range of 1.9 to 3.3 mm (that is, $1.9\text{mm} \leq D \leq 3.3\text{mm}$).
In addition, the diameter of only a portion of the through-hole 16 on the front side is reduced to form a stepped portion {in the figure, the inside diameter of this portion is denoted by d1 (see Fig. 2)}.

[0019] In addition, since the resistor 18 is disposed between the terminal metal piece 17 and the center electrode 13 in the through-hole 16 and the first and the second conductive glass sealing layers 19 and 20 are disposed at both end portions of the resistor 18, the resistor 18 is electrically connected to the center electrode 13 and the terminal metal piece 17 with the first and the second conductive glass sealing layers 19 and 20. The conductive glass sealing layers 19 and 20 and the resistor 18 form a conductive bonding layer, and the composition or the like thereof will be described later.

[0020] The center electrode 13 is made from a Ni alloy having excellent heat and corrosion resistance such as Inconel (Inconel: trade name) and is formed into a columnar shape. In addition, a precious metal tip 21, which is made from, for example, an alloy (Ir-5Pt) containing iridium as a main component and 5 mass% of platinum and is formed into a columnar

shape, is joined to the front end of the center electrode 13 by laser welding or the like. The inside diameter d1 (inside diameter of the portion having the reduced diameter) of the through-hole 16 of the insulator 12 is slightly greater than the outside diameter D1 of the center electrode 13, and a radial gap C of, for example, 0.1 to 0.5 mm is formed between the center electrode 13 and the through-hole 16. The radial gap C is provided as a gap for avoiding a difference between the thermal expansion amounts caused by different thermal expansion coefficients of the center electrode 13 and the insulator 12.

[0021] The ground electrode 14 is made from a Ni alloy having excellent heat and corrosion resistance and is formed into a substantially prismatic shape. In addition, a column-shaped precious metal tip 22, which is made of a Pt alloy containing, for example, platinum as a main component and Rh or Ir as a sub component, is joined by laser welding or the like at a position opposed to the precious metal tip 21 of the center electrode 13. As the base portion 14a of the ground electrode 14 is joined to the metal shell 11, the metal shell 11 and the ground electrode 14 are electrically connected to each other.

[0022] Accordingly, a spark discharge gap g is formed between the precious metal tip 21 of the center electrode 13 and the precious metal tip 22 of the ground electrode 14 in the axial direction. The size of the spark discharge gap g is set to, for example, about 0.9 mm. By applying a high voltage between the ground electrode 14 and the center electrode 13 in this state, spark discharge is generated in the spark discharge gap g so as to allow the spark plug 100 according to the invention to function as an ignition source of an internal combustion engine such as an engine.

[0023] The terminal metal piece 17 is made from, for example, low carbon steel, and a Ni-based metal layer is coated on the surface thereof by plating or the like. The axial distance L between the terminal metal piece 17 and the center electrode 13 is set to be equal to or smaller than 16 mm ($L \leq 16$ mm).

[0024] The resistor 18 is formed by sintering predetermined amounts of glass powder, ceramic powder, nonmetal conductive powder, and the like using, for example, the above-mentioned layer formation process. The resistance thereof is, for example, substantially 5 kΩ.

[0025] As the glass powder, borosilicate glass obtained by suitably combining SiO_2, B_2O_5 Na_2O, BaO, and the like is exemplified. As the ceramic powder, ZrO_2 is exemplified. As the nonmetal conductive powder, carbon black or graphite is exemplified. In addition, powder of metal such as Zn, Sb, Sn, Ag, and Ni, an organic binder such as dextrin, or the like may be contained.

[0026] The first and the second conductive glass sealing layers 19 and 20 are formed by combining a predetermined amount of metal powder containing one or more kinds of metal components such as Cu and Fe and a predetermined amount of glass powder such as the borosilicate glass and sintering them by, for example, the above-mentioned layer formation process. In addition, as needed, a suitable amount of semiconductive inorganic compound powder such as TiO_2 may be added.

Here, for strong junctions of the resistor 18 and the conductive glass sealing layer 19 and 20, the compositions of the glass powder contained in the resistor 18 and the conductive glass sealing layers 19 and 20 may be different from each other.

[0027] The first and the second conductive glass sealing layers 19 and 20 are heated to above a glass softening temperature and charged in the gap between the center electrode 13 and the through-hole 16 and the gap between the terminal metal piece 17 and the through-hole 16 as the terminal metal piece 17 is pushed and inserted in the axial direction so as to fill and seal the gap. In addition, the first conductive glass sealing layer 19 in this case is joined to the center electrode 13 and the resistor 18, and likewise, the second conductive glass sealing layer 20 is joined to the resistor 18 and the terminal metal piece 17.

[0028] The diameter D of the first conductive glass sealing layer 19 is set to be in the range of 1.9 to 3.3 mm ($1.9\text{mm} \leq D \leq 3.3\text{mm}$), and more preferably, in the range of not less than 1.9 mm and less than 3.0 mm ($1.9\text{mm} \leq D < 3.0\text{mm}$).

[0029] A joining surface 23 of the first conductive glass sealing layer 19 and the resistor 18 has a bowl shape (curved surface shape) in which an apex 23a thereof faces the center electrode 13. Assuming that the surface area of the joining surface 23 is Sa and the cross-sectional area (a cross-section that is perpendicular to the axial direction and includes edge portions 23b of the joining surface 23) of the first conductive glass sealing layer 19 is S1, the above-mentioned materials are charged and compacted such that Sa/S1 is equal to or greater than 1.1 ($Sa/S1 \geq 1.1$).

In addition, it is more preferable that Sa/S1 is equal to or greater than 1.5 ($Sa/S1 \geq 1.5$).

[0030] As described above, by forming the joining surface 23 of the first conductive glass sealing layer 19 and the resistor 18 into the bowl shape, the area of the joining surface 23 of the first conductive glass sealing layer 19 and the resistor 18 can be widened even though the diameter D of the first conductive glass sealing layer 19 is reduced. Accordingly, the joining force between the first conductive glass sealing layer 19 and the resistor 18 at the joining surface 23 can be increased to be equal to or greater than that in the existing case. Therefore, problems such as exfoliation or connection failure at the joining surface 23 caused by vibration or an impact exerted on the spark plug 100 can be prevented, thereby enhancing reliability of the spark plug 100.

[0031] Here, since the small gap C of, for example, about 0.1 to 0.5 mm exists between the through-hole 16 and the center electrode 13, there is a concern that the center electrode 13 vibrates relative to the insulator 12 when vibration

or an impact is transferred to the spark plug 100 from the engine or the like. However, in this embodiment, the center electrode 13 is joined to the resistor 18 with the first conductive glass sealing layer 19 over the large area Sa, that is, by the large joining force, so that the generation of exfoliation at the joining surface 23 can be prevented.

[0032] A joining surface 24 of the second conductive glass sealing layer 20 and the resistor 18 also has a bowl shape (curved surface shape) in which an apex 24a thereof faces the center electrode 13 like that of the first conductive glass sealing layer 19. Assuming that the surface area of the joining surface 24 is Sb and the cross-sectional area (a cross-section that is perpendicular to the axial direction and includes edge portions 24b of the joining surface 24) of the second conductive glass sealing layer 20 is S2, the above-mentioned materials are charged and compacted such that Sb/S2 is equal to or greater than 1.1 ($Sb/S2 \geq 1.1$).

In addition, it is more preferable that Sb/S2 is equal to or greater than 1.5 ($Sb/S2 \geq 1.5$).

[0033] As described above, by forming the joining surface 24 of the second conductive glass sealing layer 20 and the resistor 18 into the bowl shape, the area of the joining surface 24 of the second conductive glass sealing layer 20 and the resistor 18 can be widened although the diameter of the second conductive glass sealing layer 20 is reduced. Accordingly, the joining force between the second conductive glass sealing layer 20 and the resistor 18 at the joining surface 24 can be increased to be equal to or greater than that in the existing case. Therefore, problems such as exfoliation or connection failure at the joining surface 24 can be prevented, so that the spark plug 100 with high reliability can be provided.

[0034] In addition, the second conductive glass sealing layer 20 is distant from the center electrode 13 on which vibration or an impact is directly exerted, and vibration or the impact exerted on the joining surface 24 of the second conductive glass sealing layer 20 and the resistor 18 is not greater than the first joining surface 23. Accordingly, as it is set to $Sb/S2 \geq 1.1$ (preferably, $Sb/S2 \geq 1.5$) that is the same area ratio as that of the first joining surface 23, the generation of exfoliation at the joining surface 24 can be reliably prevented.

[0035] In addition, assuming that the shortest length of the resistor 18 (the axial length of only the portion of the resistor 18 which is provided in the through-hole 16 without a gap, that is, the shortest axial distance from the edge portion 23b of the joining surface 23 and the apex 24a of the joining surface 24 in the figure) in the axial direction is M and the maximum diameter (diameter) of the resistor 18 is DR, DR^2/M is equal to or smaller than 2.2 ($DR^2/M \leq 2.2$).

[0036] This is because it has been analyzed and found by the inventors that with regard to wave noises that are generally caused by a high voltage spark between electrodes, the generation of the wave noises are suppressed by the resistor 18 when the relationship of $DR^2/M \leq 2.2$ is satisfied. Accordingly, by employing the spark plug 100 according to the invention, an influence of wave noises on an acoustic device such as a radio or a computer mounted in a vehicle can be prevented.

In addition, in this embodiment illustrated in Fig. 2, since DR = D, $D^2/M \leq 2.2$.

(Example)

[0037] Next, the numerical ranges of the diameter D of the above-mentioned first conductive glass sealing layer 19, the surface area Sa of the joining surface 23 of the first conductive glass sealing layer 19 and the resistor 18, and the axial distance L between the center electrode 13 and the terminal metal piece 17 will be described in further detail with reference to the drawings and tables showing results of evaluation tests.

Fig. 3 shows the comparison of the surface areas Sa of the joining surface 23 and the values Sa/S1 when the diameter D of the first conductive glass sealing layer and the shape of the joining surface 23 are changed.

In addition, the diameter D of the conductive glass sealing layer shown in Figs. 3(a) to 3(n) is 3.3, 3.0, 2.8, and 2.5 mm, and it can be seen that as the concave depth of the bowl shape of the joining surface 23 increases, the surface area Sa of the joining surface 23 increases. In addition, the shape of the joining surface 23 is not limited to the bowl shape as long as the shape increases the surface area Sa of the joining surface 23, and as shown in Fig. 3(g), a conical trapezoidal shape may be effective. Otherwise, a curved surface having plural convexes and concaves not shown or a wave-shaped curved surface may be employed. In addition, in Fig. 3, the shape of the joining surface 23 is shown, however, this can also be applied to the surface area Sb of the joining surface 24.

[0038] Hereinafter, the evaluation test will be explained.

Plural samples of the spark plug were manufactured by changing the diameter D of the first conductive glass sealing layer 19 in the range of 1.5 to 3.9 mm, and changing the value (Sa/S1) obtained by the surface area Sa of the joining surface 23 of the first conductive glass sealing layer 19 and the resistor 18 and the cross-sectional area S1 in the range of 1.02 to 3.00.

On the basis of the impact resistance test specified in JIS B8031:2006 (Internal combustion engines-Spark plugs), the evaluation test was performed on the samples of the spark plug under conditions of a vibration amplitude of 22 mm, a number of times of impact of 400 times/min for one to two hours (although 10 minutes in JIS standard, a severe test was performed by setting more strict conditions).

In addition, after the impact resistance test, on the basis of a resistor load life-span test specified in JIS B8031:2006, a

high voltage of20±5kV was applied to generate sparks 1.3×10^7 times, and after being left for an hour, a change in resistance was measured.

The axial distance L between the terminal metal piece 17 and the center electrode 13 was uniformly set to 11 mm. In addition, the diameter of D=3.9 mm is the same diameter as that of the existing spark plug, and the same test was performed thereon for comparison with the invention.

[0039] After the impact resistance test performed for one hour, the result of the evaluation test for changes in resistance of the samples of the spark plug on which the resistor load life-span test was performed is shown in Table 1. After the impact resistance test performed for two hours, the result of the evaluation test for changes in resistance of the samples of the spark plug on which the resistor load life-span test was performed is shown in Table 2.

[0040]

[Table 1]

Sa/S1 \ Sealing layer diameter D[mm] / Sealing layer cross-section Sa[mm]	3.9	3.3	2.9	2.7	2.5	2.3	2.1	2.0	1.9	1.8	1.5
	11.95	8.55	6.61	5.73	4.91	4.15	3.46	3.14	2.84	2.54	1.77
1.02	A	B	C	C	C	C	C	C	C	C	D
1.05	A	B	C	C	C	C	C	C	C	C	D
1.10	A	A	A	A	A	A	A	A	A	B	C
1.30	A	A	A	A	A	A	A	A	A	B	C
1.50	A	A	A	A	A	A	A	A	A	B	C
1.80	A	A	A	A	A	A	A	A	A	B	C
2.10	A	A	A	A	A	A	A	A	A	B	C
2.40	A	A	A	A	A	A	A	A	A	B	C
2.70	A	A	A	A	A	A	A	A	A	B	C
3.00	A	A	A	A	A	A	A	A	A	B	C

[0041]

[Table 2]

Sealing layer diameter D[mm] / Sealing layer cross-section Sa[mm] / Sa/S1	3.9	3.3	2.9	2.7	2.5	2.3	2.1	2.0	1.9	1.8	1.5
	11.95	8.55	6.61	5.73	4.91	4.15	3.46	3.14	2.84	2.54	1.77
1.02	A	C	C	C	C	C	C	C	C	C	D
1.05	A	C	C	C	C	C	C	C	C	C	D
1.10	A	B	C	C	C	C	C	C	C	C	D
1.30	A	B	C	C	C	C	C	C	C	C	D
1.50	A	A	A	A	A	A	A	A	A	B	C
1.80	A	A	A	A	A	A	A	A	A	B	C
2.10	A	A	A	A	A	A	A	A	A	B	C
2.40	A	A	A	A	A	A	A	A	A	B	C
2.70	A	A	A	A	A	A	A	A	A	B	C
3.00	A	A	A	A	A	A	A	A	A	B	C

[0042] Here, after the test, those having a change in resistance of ±15% or less were evaluated as A, those having ±25% or less were evaluated as B, those having ±30% or less were evaluated as C, and those having ±30 or greater were evaluated as D.
In addition, in JIS B8031:2006, it is specified that the change in resistance after the impact resistance test is ±10% or less, and the change in resistance after the resistor load life-span test is ±30% or less. In addition, this test was performed under more severe conditions than that of JIS B8031:2006, so that those evaluated as C or D in this test do not have problems with product quality.

[0043] As shown in Table 1, as a result of the impact resistance test and the resistor load life-span test performed for one hour, the samples of the spark plug which have the diameters of D= 1.8mm and 1.5mm and Sa/S 1 = 1.02 and 1.05 showed large changes in resistance, however, the changes in resistance of other samples of the spark plug were ±15% or less, which is positive. From the result, it can be seen that when the diameter D is in the range of 1.9 to 3.3 mm (1.9mm ≤ D ≤ 3.3mm) and Sa/S1 is equal to or greater than 1.1 (Sa/S1 ≥ 1.1), a positive result that can achieve the object (to strengthen the joining force with a reduction in diameter) of the invention could be obtained.
In addition, since the diameter of D = 3.9 mm is the same diameter as that of the existing spark plug, it was excluded from the scope of the invention as the invention has the object is to reduce the diameter.

[0044] In addition, as shown in Table 2, as a result of the impact resistance test and the resistor load life-span test performed for two hours, large changes in resistance were observed in the samples of the spark plug having the diameter of D = 1.8mm and 1.5mm and Sa/S 1 = 1.30 or less, however, the changes in resistance of other samples of the spark plug were ±15%, which is positive. From the result, it can be seen that when the diameter D is in the range of not less than 1.9 and less than 3.0 mm (1.9mm. ≤ D < 3.0mm) and Sa/S1 is equal to or greater than 1.5 (Sa/S1 ≥ 1.5), a positive result that can further achieve the object (to strengthen the joining force with a reduction in diameter) of the invention could be obtained.
In addition, the existing spark plug having the diameter of D = 3.9 mm which was tested for comparison could obtain the result without any problem in any evaluation test.

[0045] On the basis of the experimental results of Tables 1 and 2, after performing the impact resistance test for two hours on the basis of JIS B8031:2006 by reducing the diameter to a diameter of D = 2.9 mm, changing the axial distance L between the terminal metal piece 17 and the center electrode 13 to be in the range of 4 to 22mm, changing the value (Sa/S1) that is based on the surface area Sa and the cross-sectional area S1 of the joining surface 23 of the first conductive glass sealing layer 19 and the resistor 18 to be in the range of 1.5 to 3.00, the resistor load life-span test was performed. The measurement result of the change in resistance after this test is shown in Table 3.
In addition, the same evaluation reference as those of Tables 1 and 2 is applied. Even in this case, the evaluation test was performed by setting more severe conditions as compared with JIS B8031:2006. Accordingly, in this test, those evaluated as C or D do not have problems with product quality.

[0046]

[Table 3]

L \ Sa/S1	1.5	1.8	2.1	2.4	2.1	2.7	3.0
4	A	A	A	A	A	A	A
6	A	A	A	A	A	A	A
8	A	A	A	A	A	A	A
10	A	A	A	A	A	A	A
12	A	A	A	A	A	A	A
14	A	A	A	A	A	A	A
16	A	A	A	A	A	A	A
18	C	C	B	B	B	B	C
20	C	C	C	C	C	C	C
22	C	C	C	C	C	C	C

[0047] As shown in Table 3, when the axial distance L between the terminal metal piece 17 and the center electrode 13 is greater than 18 mm, a large change in resistance could be shown. However, when the axial distance L is equal to or less than 16 mm, the change in resistance was ±15%, which is positive. It is thought that when the axial distance L between the terminal metal piece 17 and the center electrode 13 increases, the raw powder (glass powder, ceramic powder, nonmetal conductive powder, and the like) with the resistor composition or the raw powder (glass powder, metal powder, and the like) of the conductive glass sealing layer cannot be sufficiently densified. From the result, the axial distance L between the terminal metal piece 17 and the center electrode 13 was set to be equal to or less than 16 mm.
In addition, it is needless to say that the result of the evaluation test described above can be applied to the diameter of

the second conductive glass sealing layer 20 and the surface area Sb of the joining surface 24.

[0048] In addition, assuming that the axial length of the resistor 18 (the axial distance from the edge portion 23b of the joining surface 23 and the apex 24a of the joining surface 24) is M and the diameter of the resistor 18 is DR the numerical range of the value DR^2/M will be described in further detail with reference to the tables showing results of evaluation tests.

[0049] Hereinafter, the evaluation test will be explained. Plural samples of the spark plug were manufactured by changing the diameter DR of the resistor 18, that is, the diameter D of the first conductive glass sealing layer 19 to 2.0, 2.5, and 3.3 and changing (refer to Table 4) the axial length M of the resistor 18 for each diameter. An evaluation test was performed on the samples of the spark plug on the basis of the current method specified in JASO:D002-2:2004. The result of the evaluation test is shown in Table 4.

[0050]

[Table 4]

D	M	D^2/M	Evaluation
3.3	4.6	2.37	B
3.3	4.3	2.53	B
3.3	5	2.18	A
3.3	5.2	2.09	A
3.3	5.5	1.98	A
2.5	2	3.13	B
2.5	2.5	2.50	B
2.5	2.9	2.16	A
2.5	3	2.08	A
2.5	3.2	1.95	A
2.0	1.5	2.67	B
2.0	1.7	2.35	B
2.0	1.9	2.11	A
2.0	2.1	1.90	A

[0051] Here, at 500 MHz which was influenced by electrostatic capacitance, those having attenuations of equal to or greater than that of existing products (D = 3.9, M = 6.9 mm, D^2/M = 2.2, resistance of 5 kΩ) used as comparative examples were evaluated as A and those having smaller attenuations than existing products were evaluated as B.

[0052] As shown in Table 4, when D^2/M was greater than 2.2, the attenuation was small. However, when D^2/M was equal to or smaller than 2.2, the attenuation was positive. From the result, D^2/M was set to be equal to or less than 2.2. In this case, it can be seen that with regard to wave noises that are generally caused by a high voltage spark between electrodes, the generation of the wave noises are suppressed by the resistor, so that an influence of the wave noises on an acoustic device such as a radio or a computer mounted in a vehicle can be suppressed.

[0053] As described above, in the spark plug 100 according to this embodiment, adhesion between the resistor 18 and the conductive glass sealing layers 19 and 20 can be strengthened, so that a spark plug 100 can be achieved with excellent vibration resistance performance and resistor load life-span characteristics and a reduced diameter. Accordingly, even though it has a small diameter, the spark plug 100 can be provided which has better performance than the existing product having a large diameter and can be used with high reliability in tough environments where vibration, high temperature, or the like is exerted.

[0054] The invention is not limited to the above-mentioned embodiments and can be suitably modified and improved.

[0055] While the invention has been described in detail with reference to the embodiments, it should be understood by those skilled in the art that various alternations and modifications can be made without departing from the sprit and scope of the invention.

[0056] Priority is claimed on Japanese Patent Application No. 2008-090118, filed on March 31, 2008, the contents of which are incorporated herein by reference.

Claims

1. A spark plug comprising:

a cylindrical metal shell;
an insulator which has a through-hole formed inside the insulator along an axial direction of the metal shell and is held in the metal shell so as to be exposed from the metal shell;
a center electrode which is inserted into and fixed to one end portion of the through-hole;
a terminal metal piece which is inserted into and fixed to the other end portion of the through-hole;
a resistor which is provided between the center electrode and the terminal metal piece in the through-hole and distant from the center electrode in the axial direction;
a conductive glass sealing layer which is provided between the resistor and the center electrode in the through-hole without a gap; and
a ground electrode which is electrically connected to the metal shell and configured such that a predetermined spark discharge gap is formed between its front end portion and the center electrode,
wherein
a diameter D of the conductive glass sealing layer is equal to or less than 3.3 mm, and
a joining surface of the conductive glass sealing layer and the resistor is a curved surface.

2. The spark plug according to claim 1,
wherein
the diameter D of the conductive glass sealing layer is in the range of not less than 1.9 mm and less than 3.0 mm.

3. The spark plug according to claim 1 or 2,
wherein, assuming that a surface area of the joining surface is Sa and an area of a cross-section of the conductive glass sealing layer, which is perpendicular to the axial direction and includes edge portions of the joining surface, is S1, Sa/S1 is equal to or greater than 1.1.

4. The spark plug according to any one of claims 1 to 3,
wherein, assuming that a surface area of the joining surface is Sa and an area of a cross-section of the conductive glass sealing layer, which is perpendicular to the axial direction and includes edge portions of the joining surface, is S1, Sa/S1 is equal to or greater than 1.5.

5. The spark plug according to any one of claims 1 to 4,
wherein
a radial cross-section of the through-hole is circular,
a distance L in the axial direction between the center electrode and the terminal metal piece is equal to or less than 16 mm,
assuming that a maximum diameter of the resistor is DR and a shortest distance in the axial direction of a portion of the resistor which is provided in the through-hole without a gap is M, DR^2/M is equal to or less than 2.2.

6. The spark plug according to any one of claims 1 to 5,
wherein
the terminal metal piece and the resistor are distant from each other,
the second conductive glass sealing layer is provided between the terminal metal piece and the resistor in the through-hole without a gap, and
a second joining surface of the resistor and the second conductive glass sealing layer is a curved surface such that an apex thereof faces the center electrode.

7. The spark plug according to claim 6,
wherein, assuming that a surface area of the second joining surface is Sb and an area of a cross-section of the second conductive glass sealing layer, which is perpendicular to the axial direction and includes edge portions of the second joining surface, is S2, Sb/S2 is equal to or greater than 1.1.

8. The spark plug according to claim 6 or 7,
wherein, assuming that a surface area of the second joining surface is Sb and an area of a cross-section of the second conductive glass sealing layer, which is perpendicular to the axial direction and includes edge portions of the corresponding joining surface, is S2, Sb/S2 is equal to or greater than 1.5.

9. The spark plug according to any one of claims 1 to 8,
wherein
the conductive glass sealing layer is formed of a mixture containing glass powder and metal powder,
the resistor is formed of a mixture containing glass powder, ceramic powder, and nonmetal conductive powder, and
the compositions of the glass powder contained in the conductive glass sealing layer and the glass powder contained in the resistor are different from each other.

10. The spark plug according to any one of claims 1 to 9,
wherein
a male thread for mounting, which is formed on the metal shell to be mounted to an opponent member, is equal to or less than M10.

FIG. 1

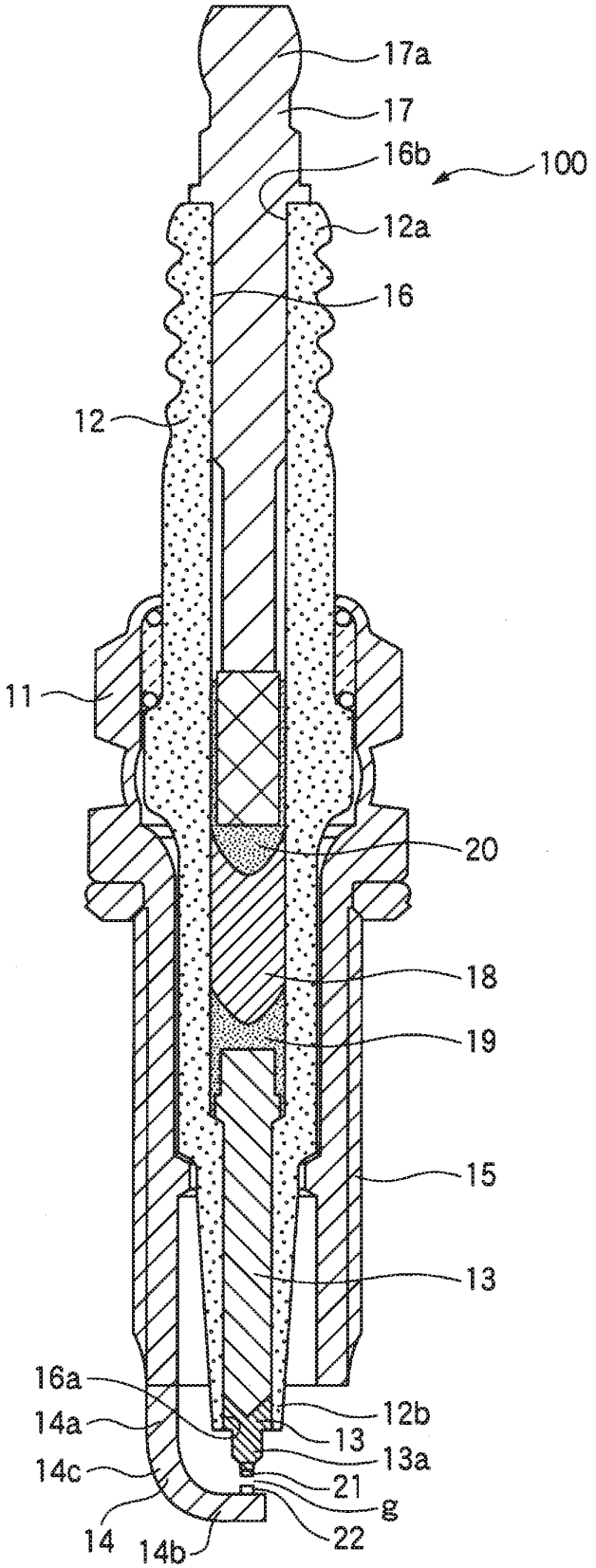
17a
17
16b
100
12a
16
12
11
20
18
19
15
13
16a
14a
12b
13
13a
14c
21
g
14
14b
22

FIG. 2

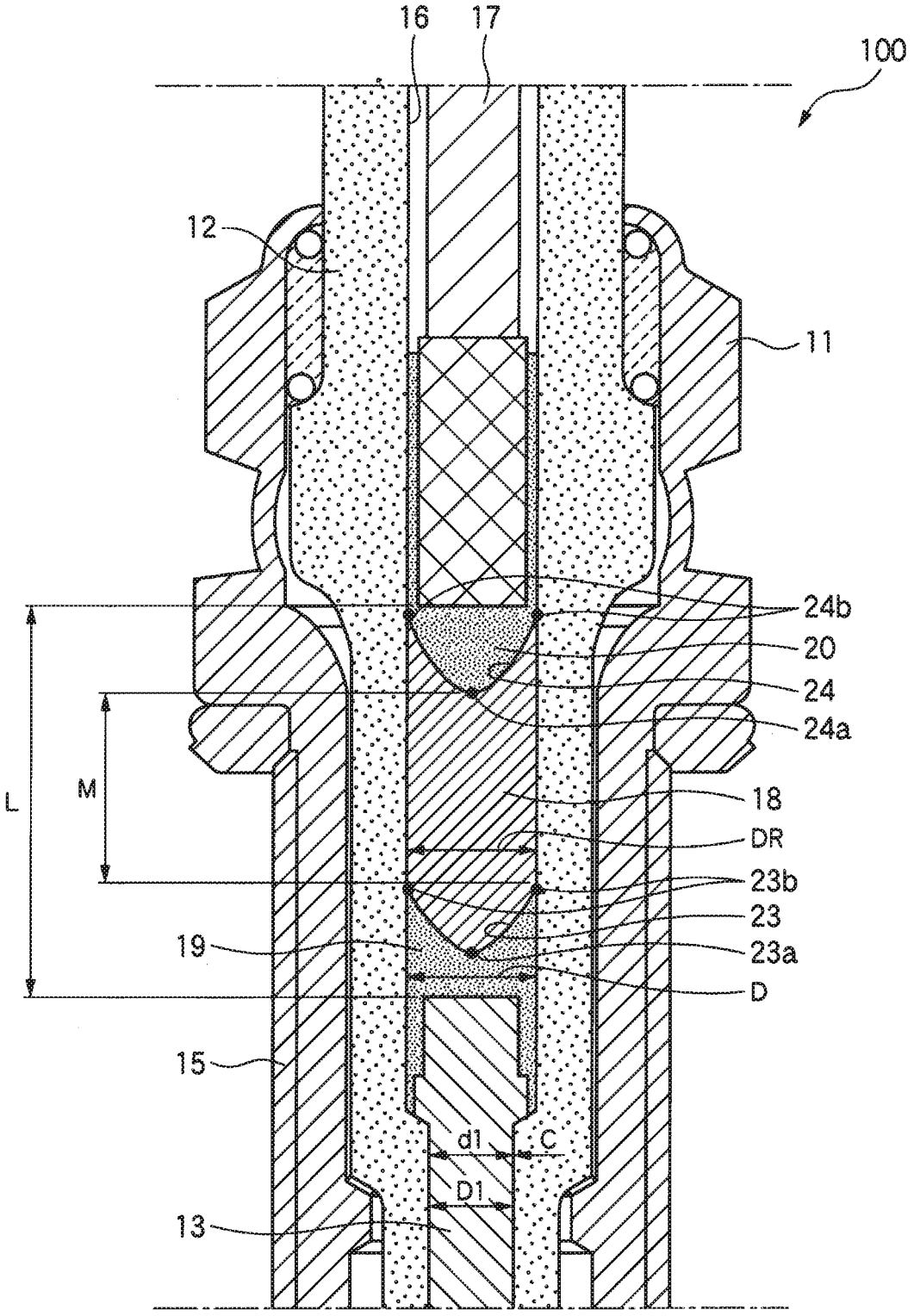

FIG. 3 (a)

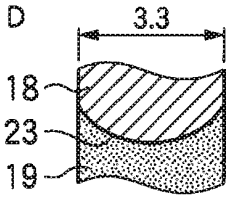

Sa 10.483mm^2
Sa/S1 1.23

FIG. 3 (b)

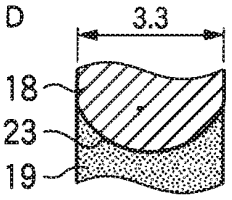

Sa 12.731mm^2
Sa/S1 1.44

FIG. 3 (c)

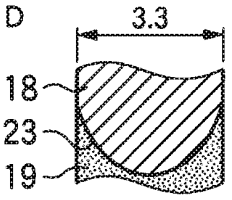

Sa 19.000mm^2
Sa/S1 2.22

FIG. 3 (d)

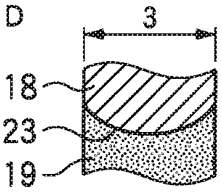

Sa 8.116mm^2
Sa/S1 1.15

FIG. 3 (e)

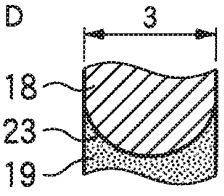

Sa 11.865mm^2
Sa/S1 1.68

FIG. 3 (f)

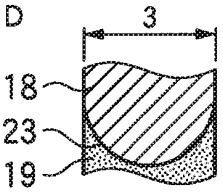

Sa 15.702mm^2
Sa/S1 2.22

FIG. 3 (g)

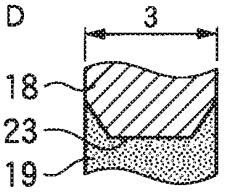

Sa 10.327mm^2
Sa/S1 1.46

FIG. 3 (h)

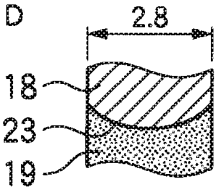

Sa 7.185mm^2
Sa/S1 1.17

FIG. 3 (i)

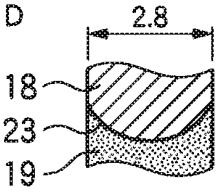

Sa 9.001mm^2
Sa/S1 1.46

FIG. 3 (j)

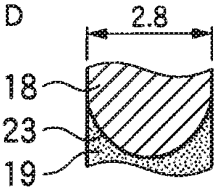

Sa 13.679mm^2
Sa/S1 2.22

FIG. 3 (k)

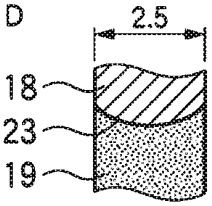

Sa 5.453mm^2
Sa/S1 1.11

FIG. 3 (l)

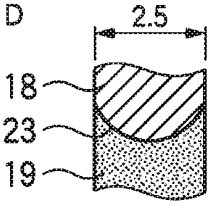

Sa 7.719mm^2
Sa/S1 1.57

FIG. 3 (m)

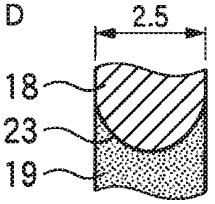

Sa 10.904mm^2
Sa/S1 2.22

FIG. 3 (n)

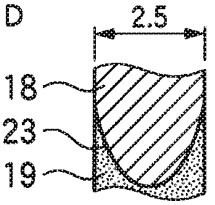

Sa 15.848mm^2
Sa/S1 3.22

INTERNATIONAL SEARCH REPORT

International application No.
PCT/JP2009/055683

A. CLASSIFICATION OF SUBJECT MATTER
H01T13/20(2006.01)i

According to International Patent Classification (IPC) or to both national classification and IPC

B. FIELDS SEARCHED

Minimum documentation searched (classification system followed by classification symbols)
H01T13/20

Documentation searched other than minimum documentation to the extent that such documents are included in the fields searched
Jitsuyo Shinan Koho 1922-1996 Jitsuyo Shinan Toroku Koho 1996-2009
Kokai Jitsuyo Shinan Koho 1971-2009 Toroku Jitsuyo Shinan Koho 1994-2009

Electronic data base consulted during the international search (name of data base and, where practicable, search terms used)

C. DOCUMENTS CONSIDERED TO BE RELEVANT

Category*	Citation of document, with indication, where appropriate, of the relevant passages	Relevant to claim No.
Y	JP 2006-66086 A (Denso Corp.), 09 March, 2006 (09.03.06), Par. Nos. [0016] to [0041]; Fig. 1 & DE 102005039880 A & DE 102005039880 A1	1-10
Y	JP 57-17587 A (NGK Spark Plug Co., Ltd.), 29 January, 1982 (29.01.82), Page 1, lower right column, line 1 to page 2, upper left column, line 20; Fig. 1 (Family: none)	1-10

☒ Further documents are listed in the continuation of Box C. ☐ See patent family annex.

* Special categories of cited documents:
"A" document defining the general state of the art which is not considered to be of particular relevance
"E" earlier application or patent but published on or after the international filing date
"L" document which may throw doubts on priority claim(s) or which is cited to establish the publication date of another citation or other special reason (as specified)
"O" document referring to an oral disclosure, use, exhibition or other means
"P" document published prior to the international filing date but later than the priority date claimed
"T" later document published after the international filing date or priority date and not in conflict with the application but cited to understand the principle or theory underlying the invention
"X" document of particular relevance; the claimed invention cannot be considered novel or cannot be considered to involve an inventive step when the document is taken alone
"Y" document of particular relevance; the claimed invention cannot be considered to involve an inventive step when the document is combined with one or more other such documents, such combination being obvious to a person skilled in the art
"&" document member of the same patent family

Date of the actual completion of the international search	Date of mailing of the international search report
01 May, 2009 (01.05.09)	19 May, 2009 (19.05.09)
Name and mailing address of the ISA/ Japanese Patent Office Facsimile No.	Authorized officer Telephone No.

Form PCT/ISA/210 (second sheet) (April 2007)

INTERNATIONAL SEARCH REPORT

International application No.
PCT/JP2009/055683

C (Continuation). DOCUMENTS CONSIDERED TO BE RELEVANT

Category*	Citation of document, with indication, where appropriate, of the relevant passages	Relevant to claim No.
Y	JP 2-126584 A (Nippondenso Co., Ltd.), 15 May, 1990 (15.05.90), Page 5, upper left column, line 5 to lower left column, line 3; page 19, lower left column, line 1 to page 21, upper right column, line 7; Figs. 1 to 3, 8 to 9 & US 5008584 A	1-10
Y	JP 2006-49207 A (Nippon Soken, Inc., Denso Corp.), 16 February, 2006 (16.02.06), Par. No. [0051]; Fig. 1 & US 2006/0028108 A1 & DE 102005036971 A	10
Y	JP 2005-108821 A (NGK Spark Plug Co., Ltd.), 21 April, 2005 (21.04.05), Par. Nos. [0043] to [0045]; Fig. 2 & US 2005/0057135 A1 & DE 102004044152 A & FR 2860654 A	10
Y	JP 2001-313148 A (NGK Spark Plug Co., Ltd.), 09 November, 2001 (09.11.01), Claim 5; Par. No. [0029]; Fig. 2 (Family: none)	10

Form PCT/ISA/210 (continuation of second sheet) (April 2007)

REFERENCES CITED IN THE DESCRIPTION

This list of references cited by the applicant is for the reader's convenience only. It does not form part of the European patent document. Even though great care has been taken in compiling the references, errors or omissions cannot be excluded and the EPO disclaims all liability in this regard.

Patent documents cited in the description

- JP 11339925 A **[0005]**
- JP 2008090118 A **[0056]**