(19) Europäisches Patentamt
European Patent Office
Office européen des brevets

(11) **EP 2 235 463 B1**

(12) **EUROPEAN PATENT SPECIFICATION**

(45) Date of publication and mention of the grant of the patent:
24.01.2018 Bulletin 2018/04

(21) Application number: **08865411.6**

(22) Date of filing: **19.12.2008**

(51) Int Cl.:
F28D 1/03 *(2006.01)*

(86) International application number:
PCT/EP2008/067968

(87) International publication number:
WO 2009/080727 (02.07.2009 Gazette 2009/27)

(54) **RADIATING MODULE FOR A HEATING APPARATUS AND ASSOCIATED METHOD TO MAKE SAID RADIATING MODULE**

STRAHLUNGSMODUL FÜR EIN HEIZGERÄT UND ENTSPRECHENDES VERFAHREN ZUR HERSTELLUNG DIESES STRAHLUNGSMODULS

MODULE DE RAYONNEMENT POUR UN APPAREIL DE CHAUFFAGE ET PROCÉDÉ ASSOCIÉ POUR FABRIQUER LEDIT MODULE DE RAYONNEMENT

(84) Designated Contracting States:
AT BE BG CH CY CZ DE DK EE ES FI FR GB GR HR HU IE IS IT LI LT LU LV MC MT NL NO PL PT RO SE SI SK TR

(30) Priority: **21.12.2007 IT UD20070242**

(43) Date of publication of application:
06.10.2010 Bulletin 2010/40

(73) Proprietor: **De'Longhi SpA**
31100 Treviso (IT)

(72) Inventor: **ZANOLIN, Sergio**
I-33070 Polcenigo (IT)

(74) Representative: **Petraz, Davide Luigi**
GLP S.r.l.
Viale Europa Unita, 171
33100 Udine (IT)

(56) References cited:
EP-A- 0 556 433
EP-A- 0 694 743
EP-A- 0 797 056
EP-A- 0 949 460
EP-A- 0 965 801
EP-A- 1 914 487
WO-A-2004/055461
DE-A1- 2 440 184
DE-A1- 2 725 081
GB-A- 2 118 706
US-A- 2 455 688

Note: Within nine months of the publication of the mention of the grant of the European patent in the European Patent Bulletin, any person may give notice to the European Patent Office of opposition to that patent, in accordance with the Implementing Regulations. Notice of opposition shall not be deemed to have been filed until the opposition fee has been paid. (Art. 99(1) European Patent Convention).

EP 2 235 463 B1

Description

FIELD OF THE INVENTION

[0001] The present invention concerns a radiating module and the relative method to make said radiating module, for an apparatus, such as a heat radiator or a similar apparatus, able to be used to heat rooms.

[0002] In particular the radiating module comprises two heat conductor plates associated with each other so as to define a substantially central portion inside which a heated thermo vector fluid is made to flow, in particular, oil.

BACKGROUND OF THE INVENTION

[0003] Apparatuses are known, such as heat radiators or similar apparatuses, used to heat rooms, consisting of a plurality of radiating modules hydraulically connected to each other by means of collectors.

[0004] Each radiating module usually comprises two metal plates, shaped and welded to each other in sealed manner so as to define two symmetrical channels with respect to the longitudinal axis of the module, more or less extensive with respect to the width of the plate. The channels have a rectilinear development, a substantially uniform width and are separated from each other, substantially in correspondence with the longitudinal axis of the module, by a central narrowing, which constitutes a welding line of the two plates.

[0005] Such a module is known from EP965801.

[0006] A diathermic oil, heated by means of one or more electric resistances, is made to flow inside the two symmetrical channels and, through the collectors, from one radiating module to the other, to give up heat to the air of the room to be heated.

[0007] One disadvantage of the known radiating module is that it needs a large quantity of oil, to flow inside the two channels, in order to generate the heat needed to determine optimum conditions of heat exchange with maximum surface temperatures which respect the limits laid down by the regulations in force regarding the prevention of burns. This entails both a considerable cost of the apparatus deriving from the cost of the oil, and also a considerable quantity of oil to be disposed of when it is used up.

[0008] Another disadvantage of the known radiating module is that said two channels are disposed laterally and internally along the perimeter of the radiating module formed by the two welded plates. Therefore, the heat dissipation surface between the zone where the oil flows and the external surface of the module is quite small.

[0009] Another disadvantage of the known radiating module is that the central narrowing which separates the two channels, in correspondence with the longitudinal axis of the module, determines a heat dispersion such that the diffusion of the heat is not uniform.

[0010] Purpose of the present invention is to achieve a radiating module, for a heating apparatus, which requires a reduced quantity of oil, which optimizes the flow of the oil, allowing a uniform diffusion of the heat and entailing a heating of the external surface, also in conditions of maximum power delivery, which respects the limits set by current legislation.

[0011] The Applicant has devised, tested and embodied the present invention to overcome the shortcomings of the state of the art and to obtain these and other purposes and advantages.

SUMMARY OF THE INVENTION

[0012] The present invention is set forth and characterized in the independent claims, while the dependent claims describe other characteristics of the invention or variants to the main inventive idea.

[0013] In accordance with the above purpose, a radiating module for a heating apparatus suitable to heat rooms, comprises a first conductor plate and a second conductor plate, associated with each other so as to define a substantially central portion inside which a thermo vector fluid is able to flow, and heating means able to heat it.

[0014] According to a characteristic feature of the present invention, the central portion comprises a single channel, substantially coaxial with and in any case comprising the longitudinal axis of the radiating module.

[0015] In a preferential solution, said single channel has a development such as to define a first segment and a second segment, in which the first segment is disposed near the heating means, for example an electric resistance, and has a width greater than said second segment.

[0016] According to another preferential solution, apart from a greater width, the first segment located in proximity with the heating means also has a greater thickness, protruding externally with respect to the plate that forms the module.

[0017] In this way, thanks to the increase in width and/or thickness of the oil channel in correspondence with or in proximity with the heating means, a greater quantity of oil is heated directly, and consequently, in order to optimize the conditions of heat exchange while respecting the maximum surface temperatures as imposed by current legislation, an overall lesser quantity of diathermic oil is required, circulating inside the channel.

[0018] According to an advantageous feature of the present invention, the first plate is provided, along one end of its perimeter, with a bend, substantially circular in shape, able to define a perimeter channel.

[0019] The perimeter channel defines externally a rounded edge which reduces the risk of possible physical damage for the user deriving from an impact on the heating apparatus, and also improves the aesthetic effect of the heating apparatus.

[0020] It should also be noted that the location of the single channel in a position substantially coaxial with the longitudinal axis of the radiating module allows to have

a segment comprised between the perimeter of the first plate and the single channel itself, with a greater length than that of the corresponding segment in known radiating modules. This also contributes to having a bigger surface for transmitting the heat from the center to the periphery of the plate, and optimizing the conditions of heat exchange while respecting the anti-burn regulations.

BRIEF DESCRIPTION OF THE DRAWINGS

[0021] These and other characteristics of the present invention will become apparent from the following description of a preferential form of embodiment, given as a non-restrictive example with reference to the attached drawings wherein:

- fig. 1 is a three-dimensional view of seven radiating modules according to the present invention installed in a heating apparatus for heating rooms;
- fig. 2 is a three-dimensional view of a single radiating module in fig. 1;
- fig. 3 is a front view of the radiating module in fig. 2;
- fig. 4 is a section view from IV to IV of fig. 3;
- fig. 5 is a section view from V to V of fig. 3; and
- fig. 6 is a three-dimensional view of two details of fig. 3.

DETAILED DESCRIPTION OF A PREFERENTIAL FORM OF EMBODIMENT

[0022] With reference to fig. 1, seven radiating modules 10 according to the present invention are shown, connected together to form a heating apparatus 12 to heat rooms.

[0023] It is clear however that the heating apparatus 12 can comprise any number whatsoever of radiating modules 10, more or less than the seven illustrated.

[0024] Each radiating module 10 (figs. 1 to 3) comprises two heat conductor plates, respectively a first 13 and a second 14, welded together, each comprising two collectors 18 disposed at the upper and lower end.

[0025] The first plate 13 is shaped so as to define in its central part a first groove 20 (figs. 4 and 5) with a substantially trapezoid shape in correspondence with a first segment 16, or lower segment, and substantially curvilinear in correspondence with a second segment 17, or upper segment, and, at one end of its perimeter, a bend 19 substantially circular in shape, or curled, which defines a perimeter channel 21.

[0026] The perimeter channel 21 defines externally a rounded edge which, apart from improving the aesthetic effect of the heating apparatus 12, reduces the risk of possible physical damage for the user deriving from an impact on the heating apparatus 12.

[0027] The first plate 13 is also shaped so as to define a first lower part 13a, substantially rectilinear, and a second upper part 13b, inclined with respect to the first part 13a so as to follow the profile of the collector 18.

[0028] The first groove 20 develops with a substantially rectilinear development along the longitudinal or vertical axis of the first plate 13.

[0029] According to a variant, not show in the drawings, the first groove develops with a tapered development along the longitudinal axis of the first plate 13.

[0030] The second plate 14 is shaped so as to define, in its central part, a second groove 22 having, in the embodiments shown, the same shape, sizes and development as the first groove 20. It may also be provided that the shape, sizes and development of the second groove 22 may be different from those of the first groove 20. The second plate is provided with lateral ends 24 substantially bent perpendicularly to a plane on which the first plate 13 lies. The two lateral ends 24 are able to increase the surface of heat exchange and transmission to the room. Furthermore, the lateral ends 24 achieve a channel in which an acceleration is created of the column of ascending air that improves the heat exchange conditions. Moreover, the second plate 14 too is shaped so as to define a first lower part 14a, substantially rectilinear, and a second upper part 14b, inclined with respect to the first part 14a so as to substantially follow the profile of the collector 18.

[0031] The two plates 13, 14, welded together, therefore define in correspondence with the grooves 20, 22, a single central channel, in this case coaxial with the longitudinal axis Y of the radiating module 10, and having a development such as to define said first segment 16 and second segment 17 (fig. 6).

[0032] According to an advantageous feature of the present invention, the first segment 16, or lower segment, has a greater width than that of the second segment 17, or upper segment, and is disposed in proximity with the heating means, normally an electric resistance, not shown, disposed in correspondence with the lower collector 18 and able to heat a thermo vector fluid which flows inside the single central channel 15.

[0033] The first segment 16 therefore defines a tank 23, substantially trapezoid in shape, in which a large quantity of thermo vector fluid accumulates.

[0034] The radiating module according to the present invention as described heretofore functions as follows.

[0035] The thermo vector fluid is made to flow in the single central channel 15 and, through the collectors 18, passes from one radiating module 10 to the other giving up heat to the ambient air.

[0036] The segment comprised between the edge of the first plate 13 and the single central channel 15 allows to transmit heat from the central channel 15 toward the external zones of the radiating module 10. This segment, due to the position of the central channel 15, is longer than the corresponding segment present in known modules and therefore determines an increase in the length of the travel that the heat has to make. Consequently, the surface of heat dissipation is increased. Furthermore, inside the perimeter channel 21, a convection effect is

generated due to the contact with the air present inside the channel 21 which improves the heat exchange effects. Therefore, it is possible to optimize the conditions of heat exchange while still maintaining the external surface of the radiating module 10 at a temperature within the allowed limits.

[0037] It is clear that modifications and/or additions of parts may be made to the radiating module for a heating apparatus as described heretofore, without departing from the field and scope of the present invention.

[0038] It is also clear that, although the present invention has been described with reference to some specific examples, a person of skill in the art shall certainly be able to achieve many other equivalent forms of radiating module for a heating apparatus, having the characteristics as set forth in the claims and hence all coming within the field of protection defined thereby.

Claims

1. Radiating module for a heating apparatus (12) able to heat rooms, comprising a first conductor plate (13) and a second conductor plate (14), associated with each other so as to define a central portion inside which a thermo vector fluid is able to flow, and heating means able to heat said thermo vector fluid, wherein said central portion comprises a single channel (15), substantially coaxial with and in any case comprising the longitudinal axis (Y) of said radiating module (10), and in that said single channel (15) has a development such as to define a first or lower segment (16) and a second or upper segment (17), wherein said first or lower segment (16) has a greater width and/or a greater thickness than said second or upper segment (17) and is disposed near said heating means, said first or lower segment (16) defining a tank (23) in which a large quantity of thermo vector fluid accumulates and is heated directly by said heating means, and wherein said first conductor plate (13) is shaped so as to define in its central part a first groove (20) with a substantial trapezoid shape in correspondence with said first or lower segment (16), and a substantially curvilinear shape in correspondence with said second or upper segment (17) and, at one end of its perimeter, a bend (19) substantially circular in shape, or curled, which defines a perimeter channel (21), and wherein said second conductor plate (14) is shaped so as to define, in its central part, a second groove (22) having the same shape, sizes and development of said first groove (20) and lateral ends (24) substantially bent perpendicularly to a plane on which said first conductor plate (13) lies.

2. Radiating module as in claim 1, wherein the heating means is disposed in correspondence with a collector (18) which connects one module to an adjacent one, **characterized in that** said first or lower segment (16) is disposed in correspondence with said collector (18).

3. Radiating module as in any claim hereinbefore, **characterized in that** said first segment (16) protrudes externally with respect to the profile of the relative plate.

4. Heating apparatus for rooms, comprising one or more radiating modules (10) as in any claim hereinbefore, wherein said radiating modules (10) are fluid-dynamically connected with each other by means of connection means (18), and wherein said heated thermo vector fluid is able to flow, through said connection means (18), from one to the other of said radiating modules (10) in order to heat the air of the surrounding environment, **characterized in that** the perimeter channels (21) of the first heat conductor plate (13) of each radiating module (10) define a substantially rounded profile.

5. Method to produce a radiating module for a heating apparatus for rooms, provided with a first heat conductor plate (13) and a second heat conductor plate (14), wherein said method comprises a coupling step, in which said heat conductor plates are associated with each other, **characterized in that** it also comprises at least a first shaping step in which said first heat conductor plate (13) is shaped so as to define in its substantially central part a first groove (20) able to at least partly define a substantially central channel through which a heated thermo vector fluid is able to flow, wherein said first groove (20) has a development such as to define a first segment (16) and a second segment (17), wherein said first segment (16) is wider than said second segment (17) and defines a tank (23) in which a large quantity of thermo vector fluid accumulates and is heated directly by heating means, wherein said first groove (20) has a substantial trapezoid shape in correspondence with said first or lower segment (16), and a substantially curvilinear shape in correspondence with said second or upper segment (17) and, at one end of its perimeter, a bend (19) substantially circular in shape, or curled, which defines a perimeter channel (21), and wherein said second conductor plate (14) is shaped so as to define, in its central part, a second groove (22) having the same shape, sizes and development of said first groove (20) and lateral ends (24) substantially bent perpendicularly to a plane on which said first conductor plate (13) lies.

6. Method as in claim 6, **characterized in that** said first groove (20) develops along a longitudinal axis of said first heat conductor plate (13).

7. Method as in claim 7, **characterized in that** it also

comprises at least a second shaping step in which said second heat conductor plate (14) is shaped so as to define, in its substantially central part, a second groove (22) able to define, together with said first groove (20) said substantially central channel through which the heated thermo vector fluid is able to flow.

8. Method as in claim 7, **characterized in that** said first and second shaping steps are performed before said coupling step.

9. Method as in claim 7, **characterized in that** said first and second shaping steps are performed after said coupling step.

Patentansprüche

1. Strahlungsmodul für ein Heizgerät (12), das zum Heizen von Räumen geeignet ist, umfassend eine erste Leiterplatte (13) und eine zweite Leiterplatte (14), die so miteinander verbunden sind, dass sie einen zentralen Abschnitt definieren, in dem eine Wärmevektorflüssigkeit fließen kann, und Heizmittel, die zum Erwärmen dieser Wärmevektorflüssigkeit geeignet sind, wobei der zentrale Abschnitt einen einzelnen Kanal (15) umfasst, der im Wesentlichen koaxial mit der Längsachse (Y) des Strahlungsmoduls (10) verläuft und diese in jedem Fall umfasst, wobei der einzelne Kanal (15) so verläuft, dass er ein erstes oder unteres Segment (16) und ein zweites oder oberes Segment (17) definiert, wobei das erste oder untere Segment (16) breiter und/oder dicker ist als das zweite oder obere Segment (17) und in der Nähe des Heizmittels angeordnet ist, wobei das erste oder untere Segment (16) einen Tank (23) definiert, in dem sich eine große Menge an Wärmevektorflüssigkeit ansammelt, die direkt durch das Heizmittel erwärmt wird, und wobei die erste Leiterplatte (13) so geformt ist, dass sie in ihrem zentralen Teil eine erste Vertiefung (20) mit im Wesentlichen trapezoider Form in Übereinstimmung mit dem ersten oder unteren Segment (16) und einer im Wesentlichen krummlinigen Form in Übereinstimmung mit dem zweiten oder oberen Segment (17) definiert, und an einem Ende ihres äußeren Umfangs eine Krümmung (19) mit im Wesentlichen kreisförmiger oder spiralförmiger Form definiert, welche einen Umfangskanal (21) definiert, und wobei die zweite Leiterplatte (14) so geformt ist, dass sie in ihrem zentralen Teil eine zweite Vertiefung (22) definiert, welche die gleiche Form, die gleichen Abmessungen und den gleichen Verlauf wie die erste Vertiefung (20) aufweist und seitliche Enden (24) besitzt, die im Wesentlichen senkrecht zu einer Ebene, auf der die erste Leiterplatte (13) liegt, gekrümmt sind.

2. Strahlungsmodul gemäß Anspruch 1, wobei das Heizmittel in Übereinstimmung mit einem Kollektor (18) angeordnet ist, der ein Modul mit einem benachbarten Modul verbindet, **dadurch gekennzeichnet, dass** das erste oder untere Segment (16) in Übereinstimmung mit dem Kollektor (18) angeordnet ist.

3. Strahlungsmodul gemäß irgendeinem der vorhergehenden Ansprüche, **dadurch gekennzeichnet, dass** das erste Segment (16) in Bezug auf das Profil der jeweiligen Platte nach außen vorsteht.

4. Heizgerät für Räume, umfassend ein oder mehrere Strahlungsmodule (10) gemäß irgendeinem der vorhergehenden Ansprüche, wobei die Strahlungsmodule (10) durch ein Verbindungsmittel (18) fluiddynamisch miteinander verbunden sind, und wobei diese Wärmevektorflüssigkeit durch dieses Verbindungsmittel (18) von einem zum anderen Strahlungsmodul (10) fließen kann, um die Luft der Umgebung zu erwärmen, **dadurch gekennzeichnet, dass** die Umfangskanäle (21) der ersten Wärmeleiterplatte (13) jedes Strahlungsmoduls (10) ein im Wesentlichen gewölbtes Profil definieren.

5. Verfahren zur Herstellung eines Strahlungsmoduls für ein Heizgerät für Räume, welches eine erste Wärmeleiterplatte (13) und eine zweite Wärmeleiterplatte (14) besitzt, wobei das Verfahren einen Kupplungsschritt umfasst, in dem die Wärmeleiterplatten miteinander verbunden werden, **dadurch gekennzeichnet, dass** es außerdem wenigstens einen ersten Formungsschritt umfasst, in dem die erste Wärmeleiterplatte (13) so geformt wird, dass sie in ihrem im Wesentlichen zentralen Teil eine erste Vertiefung (20) definiert, die zumindest teilweise einen im Wesentlichen zentralen Kanal definieren kann, durch den eine erwärmte Wärmevektorflüssigkeit fließen kann, wobei die erste Vertiefung (20) so verläuft, dass sie ein erstes Segment (16) und ein zweites Segment (17) definiert, wobei das erste Segment (16) breiter ist als das zweite Segment (17) und einen Tank (23) definiert, in dem sich eine große Menge an Wärmevektorflüssigkeit ansammelt, die direkt durch das Heizmittel erwärmt wird, wobei die erste Vertiefung (20) eine im Wesentlichen trapezoidale Form in Übereinstimmung mit dem ersten oder unteren Segment (16) und einer im Wesentlichen krummlinigen Form in Übereinstimmung mit dem zweiten oder oberen Segment (17) aufweist, und an einem Ende ihres äußeren Umfangs eine Krümmung (19) mit im Wesentlichen kreisförmiger oder spiralförmiger Form aufweist, welche einen Umfangskanal (21) definiert, und wobei die zweite Leiterplatte (14) so geformt ist, dass sie in ihrem zentralen Teil eine zweite Vertiefung (22) definiert, welche die gleiche Form, die gleichen Abmessungen und den gleichen Verlauf wie die erste Vertiefung

(20) aufweist und seitliche Enden (24) besitzt, die im Wesentlichen senkrecht zu einer Ebene, auf der die erste Leiterplatte (13) liegt, gekrümmt sind.

6. Verfahren gemäß Anspruch 6, **dadurch gekennzeichnet, dass** die erste Vertiefung (20) entlang einer Längsachse der ersten Wärmeleiterplatte (13) verläuft.

7. Verfahren gemäß Anspruch 7, **dadurch gekennzeichnet, dass** es außerdem mindestens einen zweiten Formungsschritt umfasst, in dem die zweite Wärmeleiterplatte (14) so geformt wird, dass sie in ihrem im Wesentlichen zentralen Abschnitt eine zweite Vertiefung (22) definiert, die zusammen mit der ersten Vertiefung (20) den im Wesentlichen zentralen Kanal definieren kann, durch den die erwärmte Wärmevektorflüssigkeit fließen kann.

8. Verfahren gemäß Anspruch 7, **dadurch gekennzeichnet, dass** der erste und zweite Formungsschritt vor dem Kupplungsschritt durchgeführt werden.

9. Verfahren gemäß Anspruch 7, **dadurch gekennzeichnet, dass** der erste und zweite Formungsschritt nach dem Kupplungsschritt durchgeführt werden.

Revendications

1. Module de rayonnement pour un appareil de chauffage (12) de salles, comprenant une première plaque conductrice (13) et une seconde plaque conductrice (14), associées l'une à l'autre de façon à définir une partie centrale à l'intérieur de laquelle un fluide caloporteur peut s'écouler, et ayant des éléments chauffants aptes à chauffer le fluide caloporteur, dans lequel ladite partie centrale comprend un canal unique (15), sensiblement coaxial avec et en tout cas comprenant l'axe longitudinal (Y) dudit module de rayonnement (10) et en ce que ledit canal unique (15) s'étend de manière à définir un premier segment, ou segment inférieur (16) et un second segment ou segment supérieur (17), dans lequel ledit premier segment ou segment inférieur (16) a une largeur supérieure et/ou une épaisseur supérieure que celles dudit second segment ou segment supérieur (17), et se trouve près desdits moyens chauffants, ledit premier segment ou segment inférieur (16) définissant un réservoir (23), dans lequel une grande quantité de fluide caloporteur s'accumule et est chauffé directement par lesdits moyens chauffants, et dans lequel ladite première plaque conductrice (13) est façonnée de manière à définir, dans sa partie centrale, une première rainure (20) de forme sensiblement trapézoïdale au niveau dudit premier segment ou segment inférieur (16), et une forme sensiblement curviligne au niveau dudit second segment ou segment supérieur (17) et, à une extrémité de son périmètre, une courbe (19) de forme sensiblement circulaire ou bouclée, définissant un canal périmétral (21), et dans lequel ladite seconde plaque conductrice (14) est façonnée de façon à définir, dans sa partie centrale, une seconde rainure (22) ayant une forme, des dimensions et un développement identiques à ceux de ladite première rainure (20) et des extrémités latérales (24) sensiblement pliées perpendiculairement à un plan sur lequel s'étend ladite première plaque conductrice (13).

2. Module de rayonnement selon la revendication 1, dans lequel les moyens chauffants sont situés au niveau d'un collecteur (18) reliant un module à un module adjacent, **caractérisé en ce que** ledit premier segment ou segment inférieur (16) est situé au niveau dudit collecteur (18).

3. Module de rayonnement selon n'importe laquelle des revendications précédentes, **caractérisé en ce que** ledit premier segment (16) fait saillie à l'extérieur par rapport au profil de la plaque correspondante.

4. Appareil de chauffage de salles, comprenant un ou plusieurs modules de rayonnement (10) selon n'importe laquelle des revendications précédentes, dans lequel lesdits modules de rayonnement (10) sont reliés de façon fluidodynamique les uns aux autres par des moyens de liaison (18), et dans lequel ledit fluide caloporteur peut s'écouler, à travers lesdits moyens de liaison (18) de l'un à l'autre desdits modules de rayonnement (10) pour chauffer l'air de l'environnement proche, **caractérisé en ce que** les canaux périmétraux (21) de la première plaque thermoconductrice (13) de chaque module de rayonnement (10) définissent un profil sensiblement arrondi.

5. Procédé pour produire un module de rayonnement pour un appareil de chauffage de salles, pourvu d'une première plaque thermoconductrice (13) et d'une seconde plaque thermoconductrice (14), dans lequel ledit procédé comprend une étape d'accouplement, dans laquelle lesdites plaques thermoconductrices sont associées l'une à l'autre, **caractérisé en ce qu'**il comprend également au moins une première étape de façonnage dans laquelle ladite première plaque thermoconductrice (13) est façonnée de manière à définir, dans sa partie sensiblement centrale, une première rainure (20) pouvant définir au moins en partie un canal sensiblement central à travers lequel peut s'écouler un fluide caloporteur, dans lequel ladite première rainure (20) s'étend de manière à définir un premier segment (16) et un second segment (17), dans lequel ledit premier seg-

ment (16) est plus large que ledit second segment (17) et définit un réservoir (23) dans lequel une grande quantité de fluide caloporteur s'accumule et est chauffé directement par des moyens de chauffage, dans lequel ladite première rainure (20) a une forme sensiblement trapézoïdale au niveau dudit premier segment ou segment inférieur (16), et une forme sensiblement curviligne au niveau dudit second segment ou segment supérieur (17) et, à une extrémité de son périmètre, une courbe (19) de forme sensiblement circulaire ou bouclée, définissant un canal périmétral (21), et dans lequel ladite seconde plaque conductrice (14) est façonnée de façon à définir, dans sa partie centrale, une seconde rainure (22) ayant une forme, des dimensions et un développement identiques à ceux de ladite première rainure (20) et des extrémités latérales (24) sensiblement pliées perpendiculairement à un plan sur lequel s'étend ladite première plaque conductrice (13).

6. Procédé selon la revendication 6, **caractérisé en ce que** ladite première rainure (20) s'étend le long d'un axe longitudinal de ladite première plaque thermoconductrice (13).

7. Procédé selon la revendication 7, **caractérisé en ce qu'**il comprend également au moins une deuxième étape de façonnage dans laquelle ladite seconde plaque thermoconductrice (14) est façonnée de manière à définir, dans sa partie sensiblement centrale, une seconde gorge (22) pouvant définir, avec ladite première rainure (20), ledit canal sensiblement central à travers lequel peut s'écouler le fluide caloporteur.

8. Procédé selon la revendication 7, **caractérisé en ce que** lesdites première et seconde étapes sont effectuées avant ladite étape d'accouplement.

9. Procédé selon la revendication 7, **caractérisé en ce que** lesdites première et seconde étapes sont effectuées après ladite étape d'accouplement.

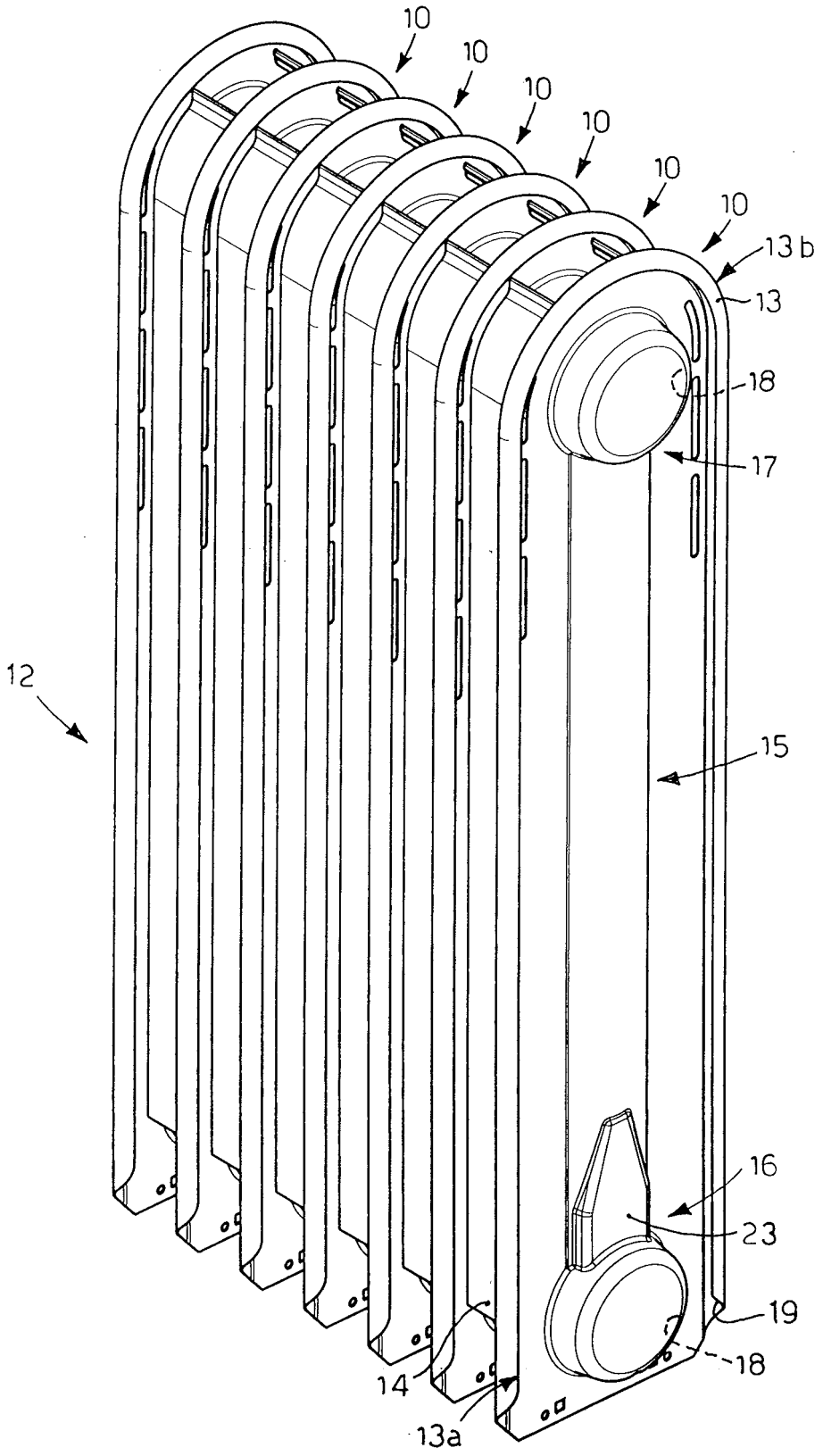

fig. 1

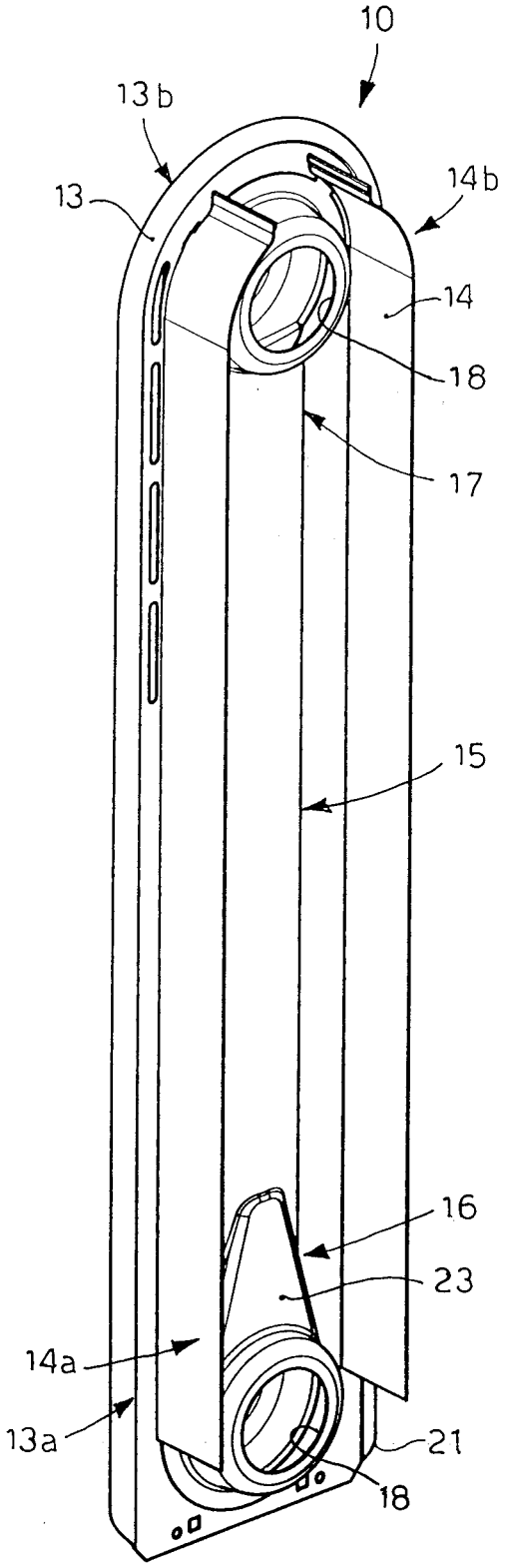

fig. 2

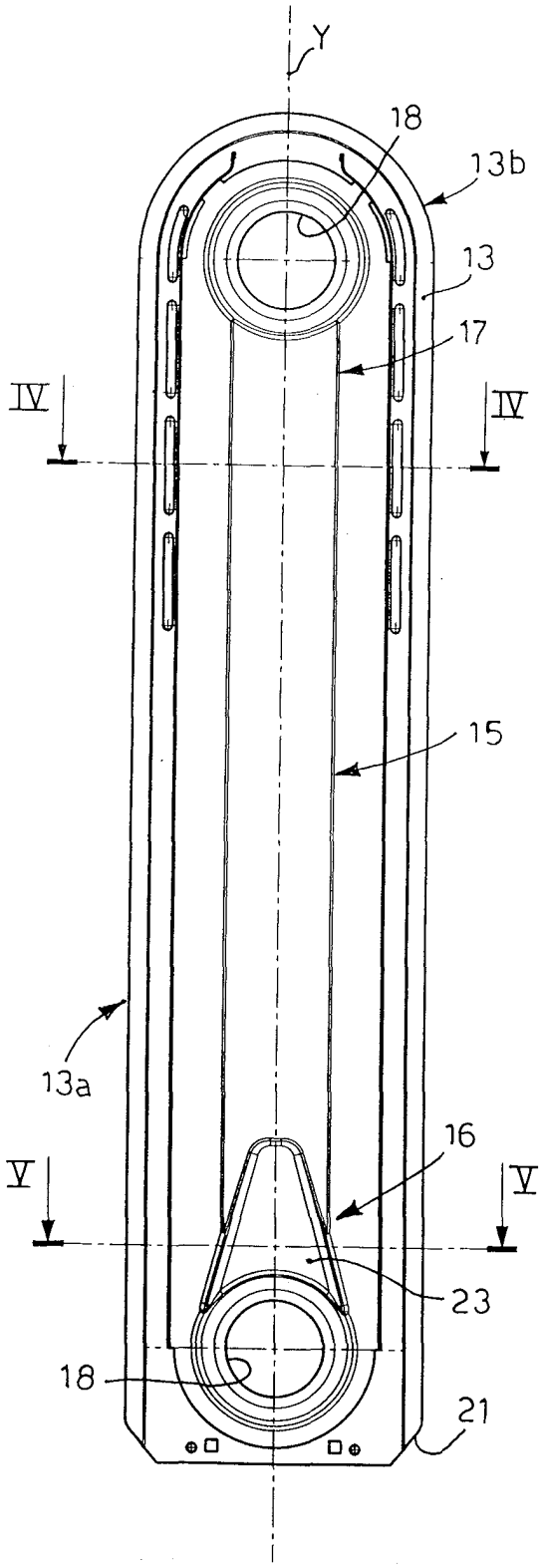

fig. 3

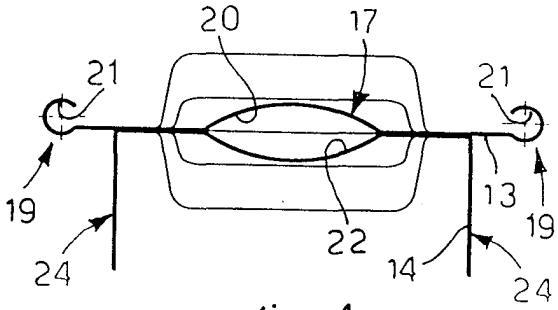

fig. 4

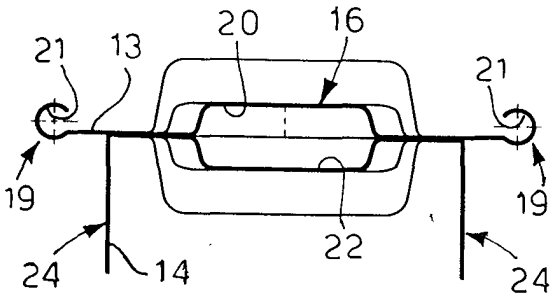

fig. 5

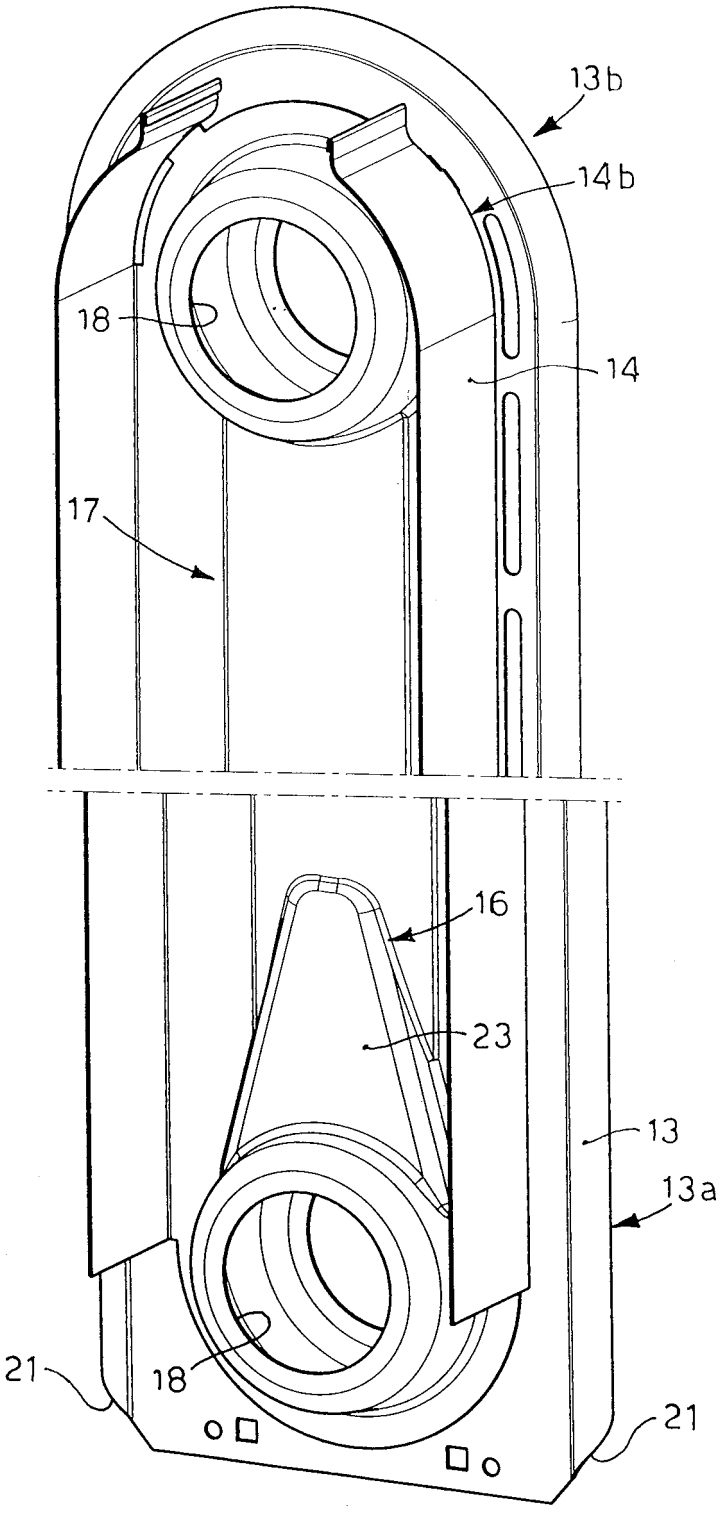

fig. 6

REFERENCES CITED IN THE DESCRIPTION

This list of references cited by the applicant is for the reader's convenience only. It does not form part of the European patent document. Even though great care has been taken in compiling the references, errors or omissions cannot be excluded and the EPO disclaims all liability in this regard.

Patent documents cited in the description

- EP 965801 A **[0005]**