(19) Europäisches Patentamt
European Patent Office
Office européen des brevets

(11) EP 2 260 945 B1

(12) **EUROPEAN PATENT SPECIFICATION**

(45) Date of publication and mention of the grant of the patent:
30.05.2012 Bulletin 2012/22

(51) Int Cl.:
B05B 1/18 *(2006.01)*

(21) Application number: **10164491.2**

(22) Date of filing: **31.05.2010**

(54) **Shower head**

Brausekopf

Pomme de douche

(84) Designated Contracting States:
AL AT BE BG CH CY CZ DE DK EE ES FI FR GB GR HR HU IE IS IT LI LT LU LV MC MK MT NL NO PL PT RO SE SI SK SM TR

(30) Priority: **05.06.2009 IT BS20090097**

(43) Date of publication of application:
15.12.2010 Bulletin 2010/50

(73) Proprietor: **Bossini S.p.A.**
25065 Lumezzane S.S. (Brescia) (IT)

(72) Inventor: **Bossini, Leonardo**
I-25080, Molinetto di Mazzano, BRESCIA (IT)

(74) Representative: **Pulieri, Gianluca Antonio**
Jacobacci & Partners S.p.A.
Piazza della Vittoria, 11
25122 Brescia (IT)

(56) References cited:
DE-A1- 10 313 822
DE-A1-102004 056 070
DE-A1-102006 013 881
JP-A- 2009 279 484
US-A1- 2002 100 818
US-A1- 2006 151 640
US-A1- 2006 163 391
US-A1- 2008 011 880

Note: Within nine months of the publication of the mention of the grant of the European patent in the European Patent Bulletin, any person may give notice to the European Patent Office of opposition to that patent, in accordance with the Implementing Regulations. Notice of opposition shall not be deemed to have been filed until the opposition fee has been paid. (Art. 99(1) European Patent Convention).

EP 2 260 945 B1

Description

[0001] . The present invention relates to a shower head suitable for evacuating the residual water from the distribution chamber after using the shower.

[0002] . Recently, a number of shower heads of considerable size and with clean lines have become considerably popular. Such shower heads, e.g. as disclosed in US 2006/163391 A1, DE 10313822 A1, DE 102004056070 A1, JP 2009279484 A, US 2002/100818, DE 102006013881 A1, are made from circular, square or rectangular plates coupled so as to form a distribution chamber, supplied with water; the lower plate is provided with openings, for example defined by flexible nozzles, for dispensing the jets.

[0003] . Given the size of such shower heads, after use a considerable amount of water remains in the distribution chamber in an unstable condition which does not come out of the openings.

[0004] . Due to misalignment in assembling the shower head, which is often not perfectly horizontal, or as a result of vibrations transmitted to the shower head from the pipes in the household distribution system, the residual water tends to drip out for a long time before completely emptying.

[0005] . In the quiet of the night such dripping is often heard by the user, disturbing him/her, who associates it with malfunctioning of the shower, for

example a leak.

[0006] . The purpose of the present invention is to make a shower head suitable for overcoming the drawbacks mentioned and specifically suitable for evacuating the residual water from the distribution chamber after using the shower.

[0007] . Such purpose is achieved by a shower head made according to claim 1. The dependent claims describe further embodiments.

[0008] . The features and advantages of the shower head according to the present invention will be clear from the description below, made as a non-limiting example, according to the attached figures, wherein:

- figure 1 shows a cross-section view of a shower head according to a preferred embodiment of the present invention;
- figures 2a and 2b show two perspective views of some shower head components; and
- figures 3a to 5b show embodiments of a vortex-making element of the shower head according to the present invention.

[0009] . According to the attached figures, reference numeral 1 globally indicates a shower head.

[0010] . The shower head 1 comprises a casing inside which a distribution chamber 2 is defined.

[0011] . The casing comprises a lower wall 4 provided with through openings 6 for dispensing jets of water. For example, the shower head 1 comprises a plurality of flexible nozzles 10, which cross the lower wall and define the dispenser openings 6.

[0012] . The casing further comprises an upper wall 8 connectable to the water supply system for the entry of the water. The distribution chamber 2 is defined between the coupled lower wall and upper wall.

[0013] . For example, the lower wall 4 and the upper wall 8 are flat and parallel plates.

[0014] . The shower head 1 further comprises suction means for the entry of air into the distribution chamber. Said suction means comprise a suction pipe 12, which preferably extends in an axial direction X perpendicular to the lower plate.

[0015] . The suction pipe 12 crosses the upper wall 8 of the casing and at a first extremity is connected to the outside environment through a suction opening 14 protruding above the upper wall 8.

[0016] . In addition, the suction pipe 12 crosses the distribution chamber 2 and comes out on the outside at a second extremity, through the lower wall 4.

[0017] . The suction pipe 12 has an internal section 16 which crosses the distribution chamber 2 in the direction of the height of the latter (axial direction X), and an external section 18, continuation of the internal section, protruding above the upper wall 8 of the casing.

[0018] . Preferably, the ratio between the length of the external section 18 and the length of the internal section 16 is between 1 and 5, preferably 2 to 4, preferably equal to 3,5.

[0019] . Preferably, the suction pipe 12, at the second extremity, comprises an attachment head 20 abutting on the outer surface of the lower plate 4. For example, the head 20 is threaded on the outside, for connection with the lower plate.

[0020] . Preferably, in addition, the attachment head 20 comprises an annular seat 22 to house a sealing O-ring, compressed against the outer surface of the lower plate 4.

[0021] . According to a preferred embodiment, the shower head 1 comprises a tubular attachment flange 24 having a supply opening 26 for the entry of the water. The suction pipe 12 is inside the attachment flange 24, for example concentric to the flange in relation to the axial direction X.

[0022] . Preferably, the flange 24 comprises an axial body 27 having an axial extension, protruding from the upper plate, and a crown 28, projecting radially from the axial body 27; the outer upper surface of the crown 28 abuts with the inner surface of the upper plate 8.

[0023] . The flange 24 has internally, in an axial direction and in the transit direction of the water, a cylindrical surface 30 and a flaring 32 which widens towards the distribution chamber 2.

[0024] . Preferably, furthermore, the shower head 1 comprises an attachment ring nut 34, internally threaded, for screwing to the flange 24, and in particular to the axial

body 27 of the same, above the upper wall 8, so as to block it to the upper wall.

[0025] . According to a preferred embodiment, the shower head 1 comprises deviator means at the suction opening 14 of the suction pipe 12, suitable for deviating the incoming water so as to pass externally to the suction pipe 12.

[0026] . The deviator means comprise a vortex-making element 40 suitable for making the water passing externally to the suction pipe 12 rotate in a vortex.

[0027] . Preferably, the vortex-making element 40 is supported by the free extremity of the attachment flange 24 so as to be positioned above the suction opening 14 of the suction pipe 12.

[0028] . Preferably, the deviator means, for example the vortex-making element 40, comprise an inner chamber 42 closed at the top, positioned above the suction opening 14 to protect it from the entry of water and preferably an external annular chamber 44, around the inner chamber 42, equipped with passages for the vortical transit of the water. For example the passages are defined by a plurality of inclined blades 46, positioned in the external annular chamber 44 to produce a vortical movement of the transiting water.

[0029] . Further embodiments of the vortex-making element 40 envisage holes 50 with a helical pattern (figures 4a, 4b).

[0030] . Advantageously, the vortex-making element gives the incoming water a vortical movement which facilitates and increases the suction of air through the suction pipe 12.

[0031] . During normal functioning of the shower head, the incoming water reaches the supply opening 26 of the flange 24 and crosses the vortex-making element 40 acquiring a vortical movement. The water passes inside the flange 24, externally to the suction pipe 12, thanks to the cover formed by the inner chamber 42 closed at the top.

[0032] . The passage of the water outside the suction pipe 12, so as to lap the latter, generates a suction of air through the suction pipe itself; the air passes inside the pipe from the opening on the external surface of the lower wall 4, crosses the suction opening and, together with the water itself, is brought into the distribution chamber.

[0033] . When the water is turned off, the water remaining in the distribution chamber evacuates quickly through the dispenser openings 6, since the suction of air through the suction pipe allows the remaining water to drain out.

[0034] . Some laboratory tests have shown how in one or two minutes all the water contained in the distribution chamber is drained off.

[0035] . Innovatively, the shower head according to the present invention makes it possible to rapidly evacuate the remaining water from the distribution chamber after use, preventing annoying and persistent dripping.

[0036] . Advantageously, in addition, the shower head makes it possible to combine air with the incoming water to obtain aerated jets during normal functioning.

[0037] . It is clear that a person skilled in the art may make changes to the shower head described above so as to satisfy contingent requirements while remaining within the scope of protection as defined by the following claims.

Claims

1. Shower head (1) comprising a casing comprising:

- a lower wall (4) provided with a plurality of dispenser openings (6) towards the outside for dispensing jets of water;
- an upper wall (8), coupled to the lower wall (4) for defining an internal distribution chamber (2), connectable to a water inlet pipe;
- suction means (12, 14) for the entry of air into the distribution chamber (2), wherein the suction means (12, 14) comprise a suction pipe (12) which crosses the upper wall of the casing and at a first extremity is connected with the outside environment through a suction opening (14) protruding above the upper wall (8) of the casing;
- deviator means at the suction opening (14) of the suction pipe (12), suitable for deviating the incoming water so as to pass externally to the suction pipe (12); said shower head being **characterized in that** the deviator means comprise a vortex-making element (40), suitable for making the water passing externally to the suction pipe (12) rotate in a vortex, said element (40) comprising an inner chamber (42) closed at the top, positioned above the suction opening (14) to protect it from entry of water, and an external annular chamber (44), around the inner chamber (42); provided with passages for the vortical transit of water.

2. Shower head according to claim 1, wherein the suction pipe (12) crosses the distribution chamber (2) and comes out to the outside, at the second extremity, through the lower wall (4).

3. Shower head according to claim 2, wherein the suction pipe (12); at the second extremity, comprises an attachment head (20) abutting on the outer surface of the lower wall (4), for example threaded, for connection to the lower wall (4).

4. Shower head according to claim 3, wherein the attachment head (20) comprises an annular seat (22) for the lodging of a sealing O-ring, in compression on the outer surface of the lower wall (4).

5. Shower head according to any of the previous claims, wherein the suction pipe (12) has an internal section (16) which traverses the distribution chamber (2) in the direction of the height of the latter, and

an outer section (18), continuation of the internal section (16), protruding above the upper wall (8) of the casing, in which the ratio of the length of the outer section (18) and the length of the internal section (16) is between 1 and 5; preferably between 2 and 4; preferably equal to 3,5.

6. Shower head according to any of the previous claims, comprising an attachment flange (24) having a supply opening (26) for the entry of the water, wherein the suction pipe (12) is inside the attachment flange (24), for example concentric. '

7. Shower head according to any of the previous claims, wherein the vortex-making element is supported by the attachment flange (24) so as to be positioned above the suction opening (14) of the suction pipe (12).

8. Shower head according to any of the previous claims, wherein the vortex-making element further comprises:

b) a plurality of inclined blades (46), positioned in the external annular chamber (44) to produce a vortical movement of the passing water.

9. Shower head according to any of the previous claims, comprising a plurality of soft nozzles (10) defining the dispenser openings of the jets.

10. Shower head according to any of the previous claims, wherein the lower wall (4) and the upper wall (8) are flat and parallel plates.

Patentansprüche

1. Brausekopf (1) aufweisend ein Gehäuse, aufweisend:

- eine untere Wand (4), welche mit einer Mehrzahl von Ausgabeöffnungen (6) in Richtung der Umgebung ausgestattet ist, welche Wasserstrahlen ausgeben;
- eine obere Wand (8), welche mit der unteren Wand (4) verbunden ist, um eine innere Verteilungskammer (2) zu definieren, welche an eine Wassereinlassleitung angeschlossen werden kann;
- Ansaugmittel (12, 14) zum Einlassen von Luft in die Verteilungskammer (2), wobei die Ansaugmittel (12, 14) ein Ansaugrohr (12) aufweisen, welches die obere Wand des Gehäuses durchbricht und an einem ersten Ende mit der äußeren Umgebung durch eine Ansaugöffnung (14) verbunden ist, welche über die obere Wand (8) des Gehäuses hinausragt;
- Ablenkmittel an der Ansaugöffnung (14) des Ansaugrohrs (12), welche geeignet sind das einströmende Wasser dergestalt abzulenken, dass das einströmende Wasser außen an dem Ansaugrohr (12) vorbeifließt;

dadurch gekennzeichnet, dass die Ablenkmittel ein wirbelerzeugendes Element (40) aufweisen, welches dafür geeignet ist, dass das einströmende Wasser außen an dem Ansaugrohr (12) vorbeifließt, während es sich in einem Wirbel dreht, wobei das Element (40) eine innere Kammer (42) aufweist, welche an ihrem oberen Ende geschlossen ist, und wobei das Element (40) über der Ansaugöffnung (14) positioniert ist, um diese vor einem Eintreten von Wasser zu schützen, und wobei das Element (40) eine äußere ringförmige Kammer (44) um die innere Kammer (42) herum aufweist, welche mit Passagen für das Hindurchtreten von Wasser in Wirbeln versehen ist.

2. Brausekopf gemäß Anspruch 1, wobei das Ansaugrohr (12) durch die Verteilungskammer (2) hindurchtritt und an dem zweiten Ende durch die untere Wand (4) an der Außenseite herauskommt.

3. Brausekopf gemäß Anspruch 2, wobei das Ansaugrohr (12) an dem zweiten Ende einen Aufsatzkopf (20) aufweist, welcher an der äußeren Oberfläche der unteren Wand (4) angrenzt und zum Beispiel mit einem Gewinde versehen ist, zur Verbindung mit der unteren Wand (4).

4. Brausekopf gemäß Anspruch 3, wobei der Aufsatzkopf (20) einen ringförmigen Sitz (22) zur Aufnahme eines Dichtungs-O-Rings aufweist, welcher gegen die äußere Oberfläche der unteren Wand (4) gedrückt wird.

5. Brausekopf gemäß einem der vorangehenden Ansprüche, wobei das Ansaugrohr (12) einen inneren Abschnitt (16), welcher durch die Verteilungskammer (2) in der Richtung der Höhe derselben hindurchtritt, und einen äußeren Abschnitt (18) als Fortführung des inneren Abschnitts (16) aufweist, wobei der äußere Abschnitt (18) über die obere Wand (8) des Gehäuses hinausragt, wobei das Verhältnis der Länge des äußeren Abschnitts (18) zu der Länge des inneren Abschnitts (16) zwischen 1 und 5 liegt, bevorzugt zwischen 2 und 4, und weiter bevorzugt gleich 3,5 ist.

6. Brausekopf gemäß einem der vorangehenden Ansprüche, aufweisend einen Aufsatzflansch (24), welcher eine Versorgungsöffnung (26) für den Eintritt von Wasser aufweist, wobei sich das Ansaugrohr (12) innerhalb des Aufsatzflanschs (24) befindet, zum Beispiel konzentrisch.

7. Brausekopf gemäß einem der vorangehenden Ansprüche, wobei das wirbelerzeugende Element von dem Aufsatzflansch (24) unterstützt wird, so dass es über der Ansaugöffnung (14) des Ansaugrohrs (12) angeordnet ist.

8. Brausekopf gemäß einem der vorangehenden Ansprüche, wobei das wirbelerzeugende Element weiterhin aufweist: b) eine Mehrzahl von schräg stehenden Schaufeln (46), welche in der äußeren ringförmigen Kammer (44) angeordnet sind, um eine wirbelartige Bewegung des hindurchtretenden Wassers zu erzeugen.

9. Brausekopf gemäß einem der vorangehenden Ansprüche, aufweisend eine Mehrzahl von weichen Düsen (10), welche die Ausgabeöffnungen (6) der Strahlen definieren.

10. Brausekopf gemäß einem der vorangehenden Ansprüche, wobei die untere Wand (4) und die obere Wand (8) flache, parallele Platten sind.

Revendications

1. Pomme de douche (1) comprenant un boîtier comprenant:

- une paroi inférieure (4) pourvue d'une pluralité d'ouvertures de distribution (6) vers l'extérieur pour distribuer des jets d'eau;
- une paroi supérieure (8) accouplée à la paroi inférieure (4) pour définir une chambre de distribution interne (2), pouvant être connectée à un tuyau d'entrée d'eau;
- un moyen d'aspiration (12, 14) permettant l'entrée d'air dans la chambre de distribution (2), dans lequel le moyen d'aspiration (12, 14) comprend un tuyau d'aspiration (12) qui traverse la paroi supérieure du boîtier et qui est connecté à une première extrémité à l'environnement extérieur à travers une ouverture d'aspiration (14) faisant saillie au-dessus de la paroi supérieure (8) du boîtier;
- un moyen de déviation au niveau de l'ouverture d'aspiration (14) du tuyau d'aspiration (12), adapté pour dévier l'eau entrante afin de la faire passer à l'extérieur du tuyau d'aspiration (12);

ladite pomme de douche étant **caractérisée en ce que** le moyen de déviation comprend un élément formant un tourbillon (40), adapté pour faire tourner en tourbillon l'eau passant à l'extérieur du tuyau d'aspiration (12), ledit élément (40) comprenant une chambre intérieure (42) fermée dans sa partie supérieure, positionnée au-dessus de l'ouverture d'aspiration (14) pour la protéger contre les entrées d'eau, et une chambre annulaire extérieure (44), autour de la chambre intérieure (42), pourvue de passages pour le transit tourbillonnaire de l'eau.

2. Pomme de douche selon la revendication 1, dans laquelle le tuyau d'aspiration (12) traverse la chambre de distribution (2) et débouche à l'extérieur, à la deuxième extrémité, à travers la paroi inférieure (4).

3. Pomme de douche selon la revendication 2, dans laquelle le tuyau d'aspiration (12), à la deuxième extrémité, comprend une tête de fixation (20) en appui sur la surface extérieure de la paroi inférieure (4), par exemple filetée, pour être connectée à la paroi inférieure (4).

4. Pomme de douche selon la revendication 3, dans laquelle la tête de fixation (20) comprend un siège annulaire (22) pour loger un joint torique d'étanchéité en compression sur la surface extérieure de la paroi inférieure (4).

5. Pomme de douche selon l'une quelconque des revendications précédentes, dans laquelle le tuyau d'aspiration (12) a une section intérieure (16) qui traverse la chambre de distribution (2) dans la direction de la hauteur de cette dernière, et une section extérieure (18), dans le prolongement de la section intérieure (16), qui fait saillie au-dessus de la paroi supérieure (8) du boîtier, dans laquelle le rapport de la longueur de la section extérieure (18) sur la longueur de la section intérieure (16) est compris entre 1 et 5, de préférence entre 2 et 4, et est de préférence égal à 3,5.

6. Pomme de douche selon l'une quelconque des revendications précédentes, comprenant une bride de fixation (24) comportant une ouverture d'alimentation (26) permettant l'entrée d'eau, dans laquelle le tuyau d'aspiration (12) se trouve à l'intérieur de la bride de fixation (24), par exemple de façon concentrique.

7. Pomme de douche selon l'une quelconque des revendications précédentes, dans laquelle l'élément formant un tourbillon est supporté par la bride de fixation (24) de manière à être positionné au-dessus de l'ouverture d'aspiration (14) du tuyau d'aspiration (12).

8. Pomme de douche selon l'une quelconque des revendications précédentes, dans laquelle l'élément formant un tourbillon comprend en outre:

b) une pluralité de lames inclinées (46), positionnées dans la chambre annulaire extérieure (44) pour produire un mouvement tourbillonnaire de l'eau qui y circule.

9. Pomme de douche selon l'une quelconque des revendications précédentes, comprenant une pluralité de buses molles (10) définissant les ouvertures de distribution des jets.

10. Pomme de douche selon l'une quelconque des revendications précédentes, dans laquelle la paroi inférieure (4) et la paroi supérieure (8) sont des plaques plates et parallèles.

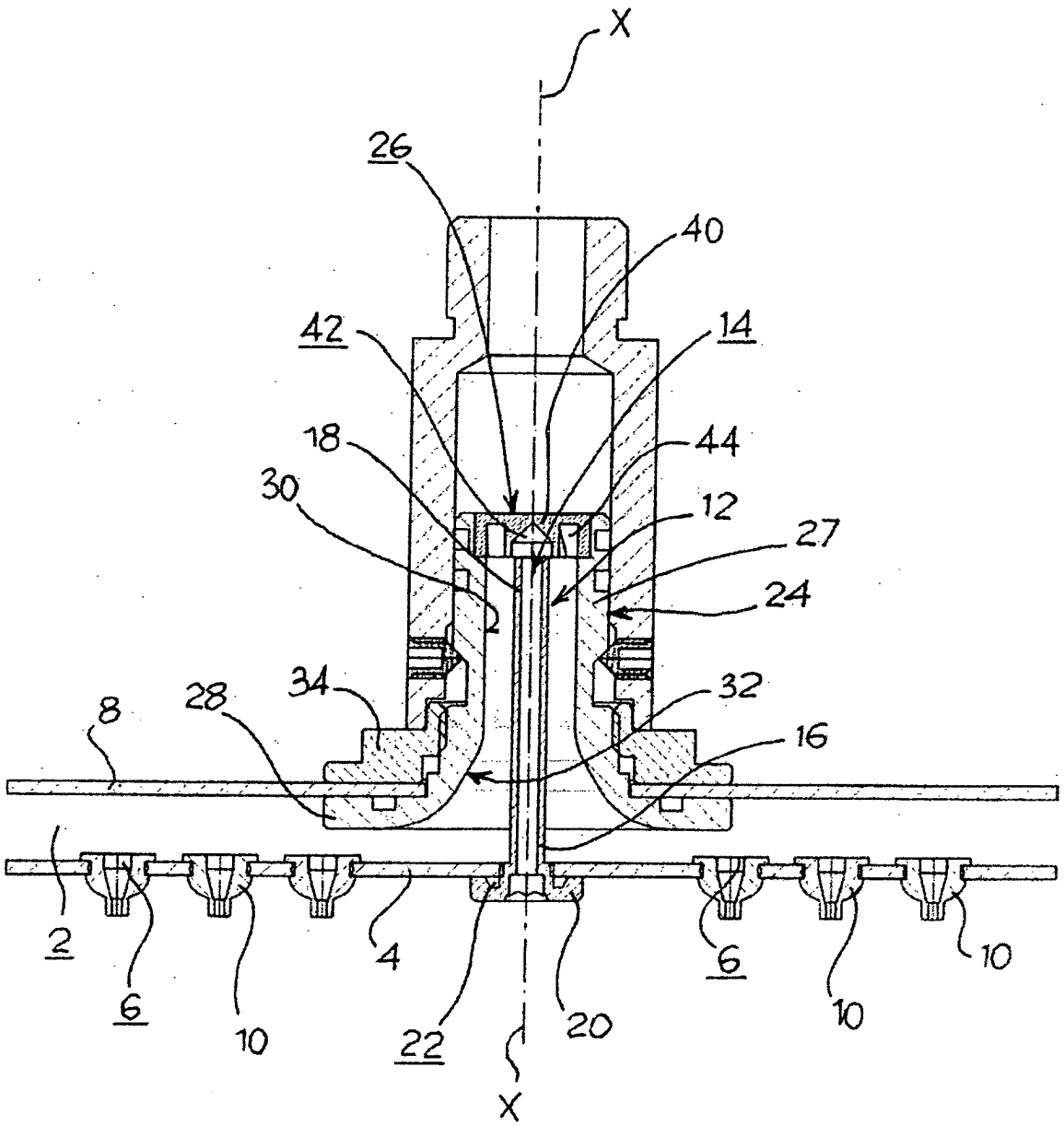

Fig.1

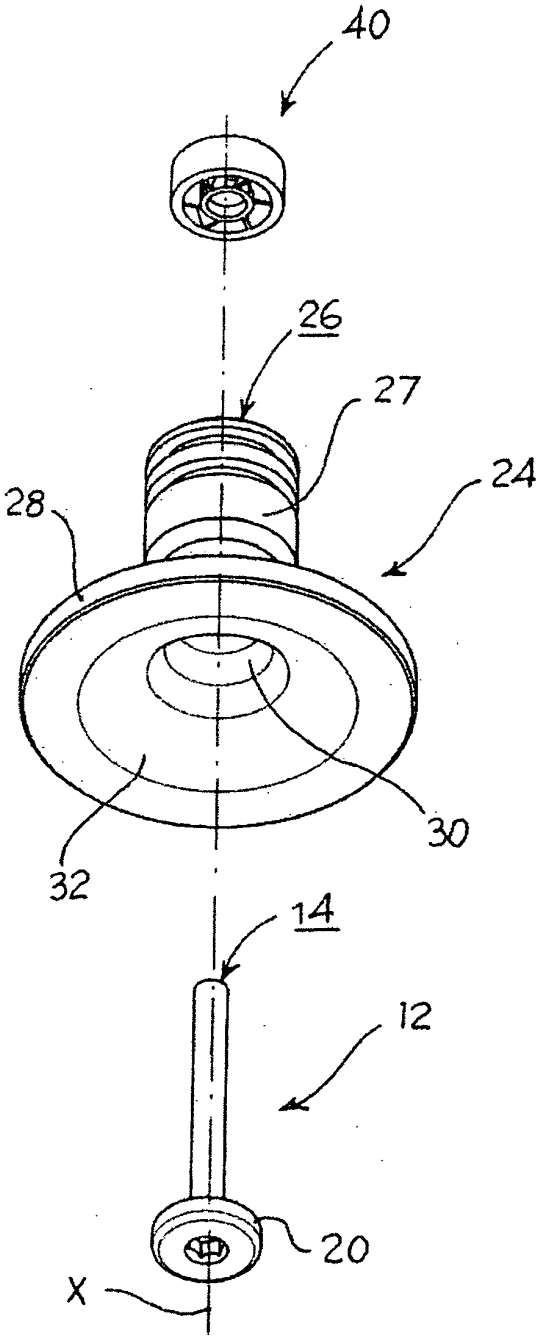

Fig. 2a

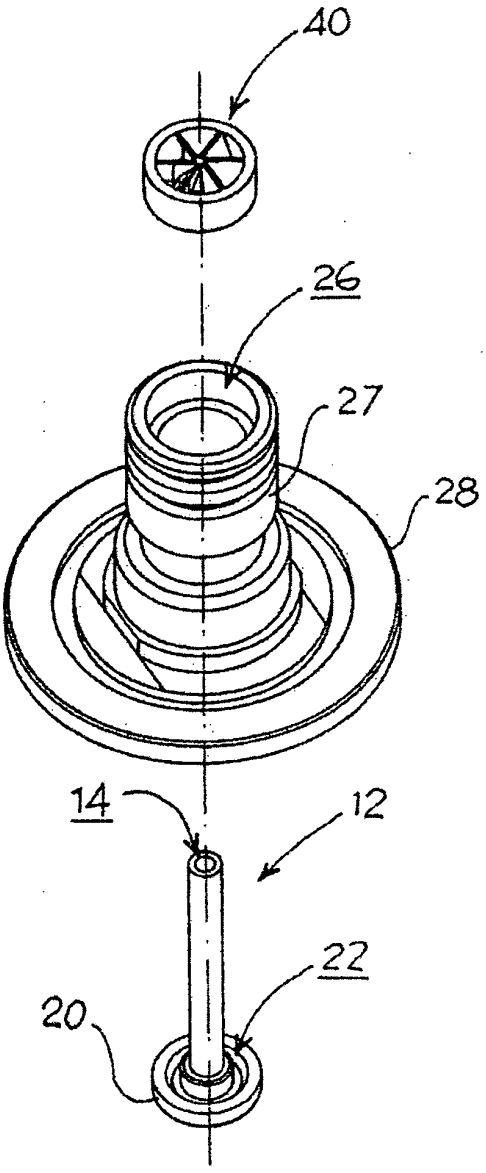

Fig. 2b

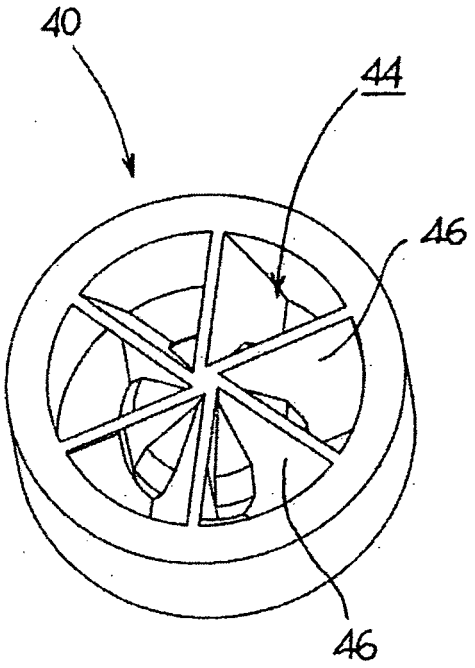

Fig.3a

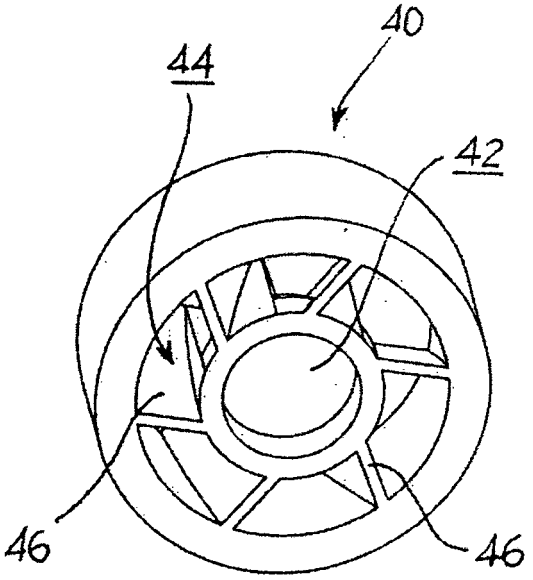

Fig.3b

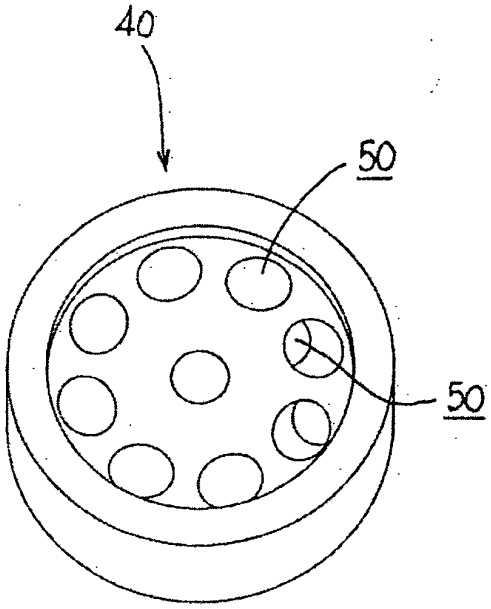

Fig. 4a

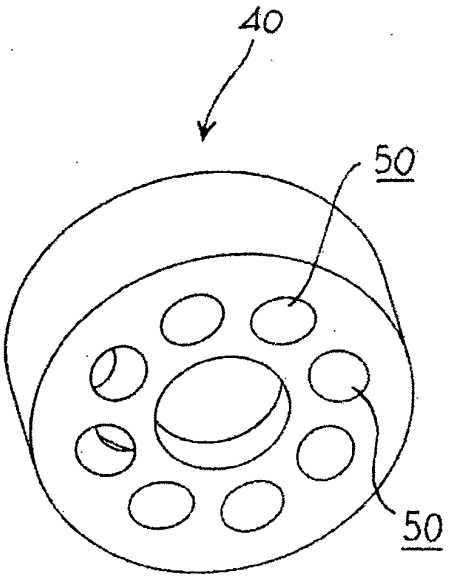

Fig. 4b

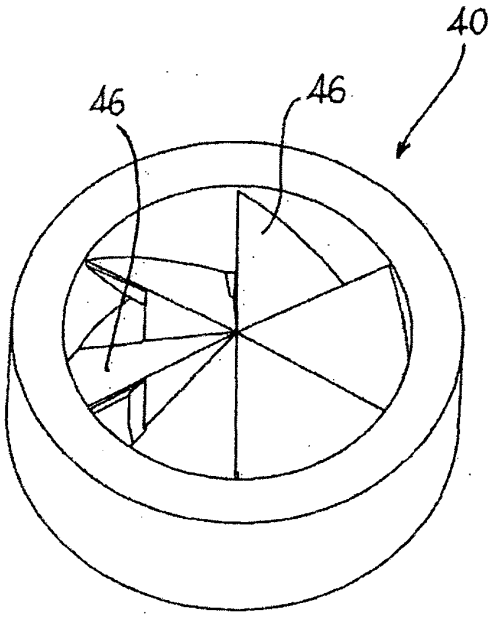

Fig.5a

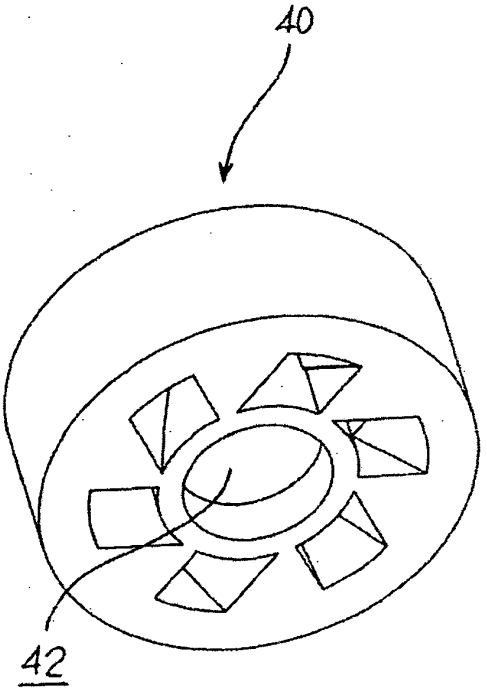

Fig.5b