(19) Europäisches Patentamt
European Patent Office
Office européen des brevets

(11) EP 2 333 420 A1

(12) EUROPEAN PATENT APPLICATION

(43) Date of publication:
15.06.2011 Bulletin 2011/24

(51) Int Cl.:
F24C 7/06 (2006.01) *F24C 7/08* (2006.01)

(21) Application number: **10194579.8**

(22) Date of filing: **10.12.2010**

(84) Designated Contracting States:
AL AT BE BG CH CY CZ DE DK EE ES FI FR GB GR HR HU IE IS IT LI LT LU LV MC MK MT NL NO PL PT RO RS SE SI SK SM TR
Designated Extension States:
BA ME

(30) Priority: **11.12.2009 IT TO20090979**

(71) Applicant: **Indesit Company S.p.A.**
60044 Fabriano (AN) (IT)

(72) Inventors:
- **Roge, Philippe**
60044, Fabriano (Ancona) (IT)
- **Cras, Olivier**
60044, Fabriano (Ancona) (IT)
- **Burger, Christian**
60044, Fabriano (Ancona) (IT)
- **Malerba, Thomas**
60044, Fabriano (Ancona) (IT)
- **Crinquant, Yves**
60044, Fabriano (Ancona) (IT)
- **Chapelier, Jean-Claude**
60044, Fabriano (Ancona) (IT)

(74) Representative: **Gallarotti, Franco**
Buzzi, Notaro & Antonielli d'Oulx
Via Maria Vittoria, 18
10123 Torino (IT)

(54) Food cooking appliance

(57) A food cooking appliance has a cooking chamber (8) delimited by a plurality of walls (4-7) of a structure (2-3) of the appliance (1), among which a thermally conductive lower wall (7) defining a bottom surface (7a) of the cooking chamber (8), formed from nontoxic material, adapted to receive food to be cooked directly thereon. A first heating element (11) is arranged within the cooking chamber (8) and a second heating element (12) arranged under the cooking chamber (8) in thermal contact with the lower wall (7). The appliance (1) has a control system (9), comprising a first temperature sensor (10) for detecting the air temperature in the cooking chamber (8) and a second temperature sensor (13) to detect the temperature of the lower wall (7). The control system (9) is configured to control the contemporaneous operation of the first and second heating elements (11, 12) based on detections carried out through the first and second temperature sensor elements (10, 13), so to obtain heating of the food both by convection and by conduction, through heating of the air in the cooking chamber (8) by the first heating element (11) and through heating of the lower wall (7) by the second heating element (12), respectively.

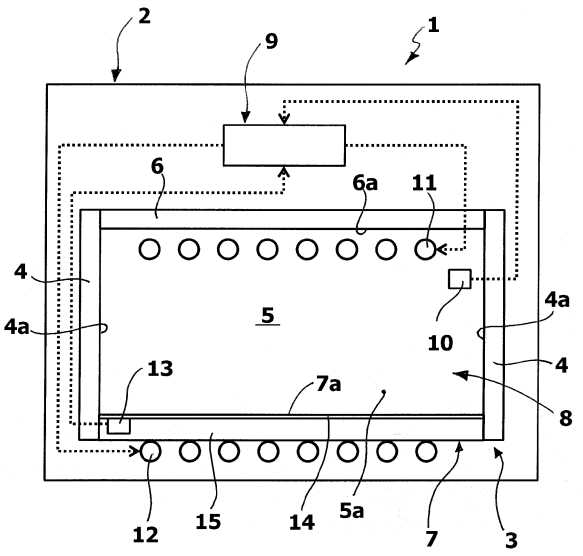

Fig. 1

EP 2 333 420 A1

Description

Field of the invention

[0001] The present invention refers to a food cooking appliance, having a cooking chamber delimited by a plurality of walls of a structure of the appliance, among which a thermally conductive lower wall defining a bottom surface of the cooking chamber, the appliance having
a control system, comprising at least one temperature sensor for detecting the air temperature in the cooking chamber,
at least one first heating element arranged within the cooking chamber and operable by the control system,
at least one second heating element arranged below the cooking chamber and operable by the control system,
wherein the control system is configured for controlling operation of the first and second heating elements, the first heating element being controllable for adjusting the air temperature in the cooking chamber based on detections carried out through the first temperature sensor element.

Background of the invention

[0002] The appliances of the indicated type are known and typically represented by baking ovens. The structure of such ovens comprises an enamelled metallic muffle, delimiting a cooking chamber. The structure further comprises a door with a window, hinged to the muffle in a fore part thereof, to close the cooking chamber at the front.

[0003] Ovens of the indicated type are provided with means for heating food, typically represented by metallic electric resistances or by gas burners, mounted outside or inside the cooking chamber defined by the muffle. Inside the cooking chamber an electric resistance called a "grill" may be mounted, located in proximity of the upper wall of the muffle. In so-called ventilated ovens, an electric resistance may be arranged also behind the rear wall of the muffle, or behind a shell fixed to the inner side of the rear wall of the muffle: such resistance, usually circular, is mounted substantially at the delivery section of a fan, and for such purpose an array of slots is provided in the rear wall of the muffle and/or the shell thereof, for passage of the air forced by the fan. An electric resistance, or a gas burner, may also be provided below the lower wall of the muffle, spaced apart therefrom, to heat it and thus to indirectly obtain heating of the air inside the cooking chamber.

[0004] Inside the cooking chamber lateral sliding guides are generally provided for removable shelves, such as grills and drip pans, suitable to support the recipients containing the food being cooked at an intermediate position between the lower and the upper wall of the muffle. The air in the cooking chamber is heated by one or more of the heating elements which are provided for and may be moved by means of the above-said fan to favour heat distribution. The air temperature is measured by means of the above-said sensor element and, based on such information, the control system controls the heating element(s) so that the air inside the cooking chamber maintains a substantially constant temperature, for example a temperature set by a user by means of a control panel. The food is thus cooked mainly by means of heating of the air present, and optionally by irradiation, if the grill resistance is activated with a power sufficient for such purpose.

[0005] This known manner of cooking has essentially three inconveniences. First of all, from a thermal point of view, air is insulating by nature, and thus heating is difficult and slow. Second, the fact that complete cooking of the food is obtained practically exclusively through heating of the air does not allow the process to be managed precisely. Third, the metallic muffle represents as a whole a "thermal brake", that is, a mass that must be heated, which slows the increase in cooking chamber temperature.

Summary of the invention

[0006] The general aim of the present invention is to solve one or more of the previously reported drawbacks of the traditional domestic baking ovens.

[0007] Such general aim is achieved, according to the present invention, by a baking oven having the characteristics indicated by the annexed claims, which constitute an integral part of the technical teaching provided herein in relation to the invention.

[0008] Briefly, according to the invention, a cooking appliance of the type indicated above is characterized in that the bottom surface of the cooking chamber is made of a non-toxic material, adapted to receive directly thereon a food to be baked, in that the second heating element is in thermal contact with the lower wall and that the control system further comprises at least one second temperature sensor element for detecting the temperature of the lower wall, the control system being prearranged for controlling the operation of at least one second heating element, and thus regulating the temperature of the lower wall based on detections carried out through the second temperature sensor element, the control system being also prearranged for controlling contemporaneous operation of the first and the second heating elements, to provide heating of the food both by convection and by conduction, through heating of the air in the cooking chamber caused by the first heating element and through heating of the lower wall caused by the second heating element, respectively.

[0009] Thanks to the above-said characteristics, the appliance according to the invention is provided with two different heating systems:

- heating by direct contact or conduction from the bottom: the food to be prepared can be placed, even directly, on the bottom surface of the baking cham-

ber, whose temperature can be controlled by the control system through the corresponding temperature sensor;

- heating from above: the air in the cooking chamber is heated by means of the first heating element, substantially as in a traditional oven, also in a way controllable through the corresponding temperature sensor.

[0010] Because the two above-said heating systems each have independent regulating systems and can easily operate at different temperatures, the control system of the appliance can be programmed to manage - during the various steps of a cooking process - the temperature of the bottom surface, and thus directly of the food or container thereof, as well as the temperature of the air in the cooking chamber, and thus the temperature above the food.

[0011] For example, in this way it becomes possible to bake a cake placing it directly on the bottom surface of the chamber, heating it very rapidly up to the desired contact temperature to bake the dough of the cake, and then regulating the air temperature to finalize the cooking process and brown the top part thereof.

[0012] Additional advantages of the invention with respect to the known technique are:

a) reduced preheating time, given that one part of the cooking process is obtained by conduction, with no need to wait until the air inside the chamber is hot and/or with no need to heat the entire muffle;
b) reduced overall cooking time, due to the improved energy efficiency of the appliance;
c) reduced energy required for cooking, for the same reasons given in points a) and b);
d) possibility to separately adjust the temperature of the container or directly of the food from below, which allows more precise management of cooking and to optimize the two temperatures, as cooking of the food proceeds;
e) possibility of Teppanyaki cooking style in the oven.

[0013] In a preferred embodiment the first heating element is positioned in an upper region of the cooking chamber. In this way the first heating element may be controlled both for the purpose of heating the air to the desired temperature, and for the purpose of fulfilling the grilling function, when required; also the first temperature sensor is preferably positioned in an upper region of the cooking chamber, to effectively detect the air temperature.

[0014] In one embodiment, the lower wall has a thermal conductivity higher than a plurality of other walls delimiting the cooking chamber. To achieve this, the lower wall preferably comprises at least one thermally conducting material and the walls of the above-said plurality comprise at least one thermally insulating material.

[0015] In this way the energy efficiency of the appliance is further increased, since the heat generated by the heating elements is not dissipated by the walls of the cooking chamber, such as the side, bottom and upper walls, as in the oven provided with a metallic muffle. In this way, the preheating time and the overall cooking time, as well as energy consumption, may be further reduced.

[0016] Preferably, the conducting material or materials of the first wall are metallic materials, while the insulating material or materials of the other walls are chosen from among glass materials, ceramic materials and refractory materials.

[0017] In one embodiment the first wall is formed by several superimposed parts, including at least one first wall part defining the bottom surface and a second wall part arranged between, and in contact with, the first wall part and the second heating element. Preferably, the second sensor is operatively in contact with the above-said first part of the wall; however, in one possible variant, the second sensor may detect the temperature of the second part of the wall and the control system be arranged to indirectly infer, from this detected temperature and in a known way, the temperature of the first part. In one preferred embodiment, the above-said first and second parts are made of steel and aluminium, respectively.

[0018] In one embodiment, a layer of thermally insulating material is associated to the lower wall, in a region thereof opposite with respect to the bottom surface of the cooking chamber. This characteristic is useful to avoid the dispersion of heat from the lower wall, for example when the lower wall forms a divider vertically dividing the cavity of a muffle, or to avoid excessive heating of the part of the structure of the appliance underlying the lower wall.

[0019] In one embodiment the structure of the appliance comprises a muffle defining a cavity, to which a plurality of the walls of the cooking chamber different from the lower wall belong, and the lower wall, with a corresponding second heating element and a second temperature sensor is part of a partition shelf that divides the cavity into an upper cavity and a lower cavity. In this way the upper cavity forms the above-said cooking chamber, while the lower cavity can be used for other purposes, for example for traditional cooking, and be provided for these purposes with respective heating means and temperature sensor means.

[0020] In one variant of this embodiment the above-said partition shelf is removable from the cavity and includes electric interconnection means which, when the shelf is inserted in a respective operating position within the cavity, are coupled to homologous electric interconnection means associated to one wall of the muffle. In this way, the appliance may be employed in at least two different modes: in the absence of the partition shelf, the entire cavity defined by the muffle can be employed for traditional cooking, being in any case provided with the first heating element and the first temperature sensor, as well as being optionally provided with a lower resistance

and/or a rear resistance with a corresponding fan; vice versa, when the partition shelf is installed inside the muffle, the chamber allowing the cooking functions according to the invention is provided, with the lower cavity that may optionally be employed for the purpose of a different cooking process.

[0021] In another embodiment the appliance comprises two first heating elements, two first temperature sensor elements, two second heating elements and two second temperature sensor elements. Furthermore, in this embodiment, the cooking chamber is arranged to be divided in two horizontally flanked sub-chambers by a removable partition wall, each sucb-chamber including one first heating element, one first temperature sensor element and a corresponding portion of the lower wall with the corresponding second heating element and second temperature sensor element. In this way, when the removable dividing wall is not present, the cooking functions provided according to the invention can be obtained in the entire cooking chamber. Vice versa, in the presence of the above-said dividing wall, two sub-chambers are available, both allowing the functions provided according to the invention to be obtained and managed independently by the control system.

Brief description of the drawings

[0022] Additional characteristics and advantages of the present invention will be clear from the following description, made with reference to the annexed drawings, provided by way of non limiting example only, wherein:

- figure 1 is a partial cross section view of a cooking appliance made according to a first embodiment of the present invention;
- figure 2 is a partial cross section view of a cooking appliance made according to a second embodiment of the present invention;
- figure 3 is a partial cross section view of a cooking appliance made according to a third embodiment of the present invention;
- figure 4 is a partial cross section view of a cooking appliance made according to a fourth embodiment of the present invention.

Description of preferred embodiments of the invention

[0023] Reference throughout this specification to "one embodiment" means that a particular feature, structure, or characteristic described in connection with the embodiment is included in at least one embodiment. Thus, the appearances of the terms "in one embodiment" and the like, in various places throughout this specification are not necessarily all referring to the same embodiment. Furthermore, the particular features, structures, or characteristics may be combined in any suitable manner in one or more embodiments. Reference numerals used herein are meant only for convenience and do not define the scope of the embodiments.

[0024] It is also specified that only the elements useful for understanding the invention will be described below in the present description, taking for granted that the appliance of the invention comprises all the other elements, themselves known, for the normal operation of a domestic baking oven.

[0025] Figure 1 represents, in partial cross section, a domestic cooking appliance according to the present invention. In the example represented, the appliance is constituted by an oven, indicated with 1 as whole, having a structure including a casing or enclosure 2. A door is hinged to the fore part of the casing, in particular to a corresponding lower edge, which door is not represented being in itself known: the door may for example comprise a metallic frame provided with a front handle and a window made up of two or more parallel glass panes. The structure of the oven 1 further includes a muffle, indicated with 3 as a whole.

[0026] The muffle 3 has a rigid body comprising two side walls, a rear wall, an upper wall and a lower wall. In the example depicted, the muffle 3 is made of several assembled parts, including an upper body, embodying the side walls 4, the rear wall 5 and the upper wall 6, and a lower body embodying the lower wall, indicated with 7 as whole. Clearly, different structures of the muffle 3 are possible, for example with each wall 4-7 formed by a corresponding body (such as in successive embodiments illustrated herein), or also with a single body defining all walls of the muffle.

[0027] The walls 4-7 have respective inner surfaces 4a, 5a, 6a, 7a, delimiting - together with an inner surface of the above-said door - a cooking chamber indicated with 8 as a whole. By way of example, the chamber 8 may have a height comprised between about 20 and about 30 cm (for example about 25 cm), a width of about 40 cm and a depth of about 40 cm.

[0028] An oven control system is indicated with 9 as a whole, preferably of the type comprising a microprocessor control unit, including at least one temperature sensor element 10, of a known type, mounted inside the chamber 8 and adapted to detect the temperature of air inside the chamber.

[0029] Inside the cooking chamber at least one heating element is also arranged, which in the represented example is constituted by an electric resistance indicated with 11. The electrical supply to the resistance 11 can be controlled, in a known way, by the control system 9 to heat the air inside the chamber 8, as well as to function as a grill. For this purpose, the resistance 11 is preferably installed in an upper region of the chamber 8. Also the sensor element 10 is preferably found in the upper region of the chamber 8, at a certain distance from the resistance 11. In particular, the control system 9 is configured to control operation of the resistance 11 for the purpose of regulating the air temperature in the chamber 8, based on detections made by the sensor element 10.

[0030] Under the cooking chamber 8, and more in par-

ticular under the lower wall 7, at least one second heating element is arranged. Also said second heating element is preferably represented by an electric resistance, indicated with 12, operable and controllable by the control system.

[0031] At least the lower wall 7, defining the bottom surface 7a of the cooking chamber 8, has a thermally conductive body. As previously indicated, in an embodiment of the invention currently considered preferential, the lower wall 7 has a higher thermal conductivity relative to the plurality of other walls 4-6 which, together with the door, delimit the cooking chamber 8. For this purpose, the lower wall 7 comprises at least one thermally conductive material, such as a metallic material or a metallic alloy, while two or more of the walls 4-6 comprise at least one thermally insulating material. Such thermally insulating material may be selected from among, for example glass materials, ceramic materials and refractory materials, such as a glass ceramic material, a tempered glass, a tempered crystal, a glass crystal, a foam glass. Let us suppose, in the following, that the walls 4-6 are made of glass ceramic with reduced thermal conductivity. Naturally, in principle, all walls of the muffle 3 can be realised with the same material or with thermally conductive materials, although this reduces the advantages of the invention.

[0032] According to the invention, the bottom surface 7a defined by the lower wall 7 is made with a nontoxic material, so to be able to receive directly thereon, when needed, the food to be cooked, without the need for this to be necessarily contained in a respective cooking recipient. In the example considered herein, the above-said nontoxic material is stainless steel, but it is obviously possible to use other nontoxic thermal conducting material. According to a further characteristic of the invention the resistance 12 is in thermal contact with the lower wall 7; as shown in figure 1, in fact, the resistance 12 is in direct contact with the lower wall 7.

[0033] Always according to the invention, the control system 9 comprises a second temperature sensor element, indicated with 13, adapted to detect the temperature of the lower wall 7, and the system 9 is prearranged to control operation of the resistance 12, and therefore to adjust the temperature of the lower wall 7 or of its surface 7a, based on detections made by the sensor element 13.

[0034] The sensor element 13 is preferably positioned so to directly detect the temperature of the wall substantially at the bottom surface 7a; in possible variants, however, the sensor element 13 can detect the temperature of the wall 7 even in an area relatively far from the surface 7a and the control system 9 can be programmed to infer the surface temperature, based on the physical characteristics of the material or materials constituting the wall 7 and based on the detected temperature.

[0035] In the embodiment exemplified in the figure, the lower wall 7 is formed by several substantially plate-like, overlapping parts in direct contact with each other, including at least one first wall part 14, defining the bottom surface 7a, and a second wall part 15. Such second part 15 is arranged between the first part 14 and the resistance 12, in direct contact with both. In the example, the sensor element 13 is operatively in contact with the first wall part 14, so to obtain substantially direct detection of the bottom surface 7a of the cooking chamber. The first wall part 14 is of stainless steel, while the second part 15 is of aluminium, but obviously other thermal conducting materials may be used. Furthermore, the lower wall 7 can also be formed by a single body of nontoxic heat conducting material, with which the resistance 12 is in thermal contact.

[0036] Also according to the present invention, the control system 9 is arranged to control, within the same cooking process started by a user, the contemporary activation of the resistances 11 and 12. As can be seen, in this way it is possible to heat the food positioned on the bottom surface 7a to be cooked both by convection and by conduction, through heating of the air in chamber 8 by the resistance 11 and through heating of the lower wall 7 by the resistance 12, respectively. Given that the bottom surface 7a is formed with nontoxic material, the food may be positioned directly on the wall 7, without need of an appropriate cooking container; thus it is also possible to perform Teppanyaki type cooking. For that purpose, preferably, the wall 7 can be configured so as to allow collection and/or recovery of liquids possibly released by the food during cooking, for example by providing a peripheral collecting basin on the upper profile of the wall 7.

[0037] Obviously, nothing prevents food from being cooked in an appropriate container placed on the wall 7. In every case, for the purpose of obtaining the cooking functions provided according to the invention, the food or an appropriate container therefor are positioned on the wall 7, such that the muffle 3 or the chamber 8 do not necessarily need to be provided with lateral guides for grills or dripping pans.

[0038] As previously indicated, the two heating systems constituted by the resistance 11 with the corresponding sensor 10, on one side, and the resistance 12 with the corresponding sensor 13, on the other side, can be independently controlled, and therefore operate at different temperatures.

[0039] In this way, for example, the user can be in the condition of being able to choose the heating temperature of the two systems, for the purpose of performing individualized cooking processes. For such purpose, the control system 9 includes a control panel, provided with input means allowing the user to set and/or to vary the working temperature of each of the two systems. Obviously the control system may also include predefined programs, to autonomously manage an entire cooking process, and therefore to autonomously set and/or vary, during the process, the temperature of the bottom surface, and therefore directly of the food or recipient thereof t, as well as the air temperature in the cooking chamber,

and therefore the temperature above the food.

[0040] The combined cooking functions "convection + conduction" obtainable with the appliance according to the invention are for example particularly indicated for the preparation of food such as pizza, bread, tarts, sweets in general, meat, fish, barbecue. Furthermore, as already mentioned, the apparatus according to the invention allows Teppanyaki type cooking directly on the lower wall 7.

[0041] Naturally the control system 9, with the corresponding control panel, can be advantageously configured also to allow the independent use of the two above-said heating systems.

[0042] In figure 2 a second embodiment of the invention is schematically represented; in such figure the same reference numbers of figure 1 are used to indicate elements technically equivalent to those previously described.

[0043] In this embodiment the structure of the oven, herein indicated with 1' as a whole, comprises the muffle 3' having corresponding walls 4-6 and 16 defining an overall cavity, indicated with 20 as a whole, one part of which makes up the cooking chamber 8. The cavity 20 may have, for example, an overall height of about 45 cm and the chamber 8 a height comprised between about 10 and about 20 cm (for example about 15 cm); the cavity may have a width of about 40 cm and a depth of about 40 cm.

[0044] In this embodiment, the lower part of the cooking chamber 8, with the corresponding resistance 12 and the corresponding sensor element 13, are essentially configured as a dividing shelf, indicated with 7': therefore, as can be seen, the dividing shelf subdivides the cavity 20 into an upper cavity and a lower cavity, the upper cavity constituting the cooking chamber 8.

[0045] Therefore, in this embodiment, the chamber 8 is delimited, in addition to the corresponding lower wall constituted by the shelf 7', also by portions of the walls 4-5 and by the wall 6 belonging to the muffle 3'.

[0046] In the example represented, the dividing shelf 7' also includes a layer of thermally insulating material, indicated with 21, in the opposite part with respect to the bottom surface 7a. Note that such an insulating layer 21 may be provided for also in the other embodiments of the invention described herein.

[0047] The operation of the oven 1', regarding the cooking functions made possible according to the invention, is analogous to what was previously described. The lower part of the cavity 20 may be employed for traditional cooking, and be provided for the purpose with corresponding heating means and temperature sensor means of known type, not represented in the figure, for example of the type indicated in the introduction of the present description; the functioning of such additional heating means and sensor means can be managed by the control system 9 in a known way.

[0048] In one variant of the embodiment in figure 2, the dividing shelf 7' can be configured as a shelf removable from the cavity 20. In order to allow such possibility, the shelf 7' is provided with first electric interconnection means, for example substantially configured as a male multipolar connector positioned at an edge of the shelf, such as the rear edge. On the other side, within the muffle second homologous interconnection means are provided, for example substantially configured as a female multipolar connector, connected to the control system 9. Clearly, inside the muffle 3' known means are provided to support the dividing shelf 7' in the operative position (for example guides fixed to the lateral walls 4, or formed therein). In this way, when the removable shelf 7' is inserted in a corresponding operative position in the cavity 20, the above-said first and second interconnection means are coupled, providing electrical connection of the resistance 12 and the sensor 13 with the control system 9.

[0049] In this embodiment the appliance 1' may thus be employed in at least two different modes. In the absence of the dividing shelf 7', the entire cavity 20 may be employed for traditional cooking, being provided with resistance 11 and sensor element 10; furthermore, as already mentioned, also a resistance below the wall 16 and/or a rear resistance with a corresponding fan may optionally be associated to the muffle 3'. Vice versa, when the dividing shelf 7' is installed inside the muffle, the chamber 8 is defined, allowing the cooking functions according to the invention, with the lower part of the cavity 20 may optionally be simultaneously employed for the a different cooking process.

[0050] Figure 3 schematically represents a third embodiment of the invention; also in such figure the same reference numbers of figures 1 and 2 are employed to indicate elements technically equivalent to those previously described.

[0051] Also in this embodiment the oven has corresponding walls 4-6 and a lower wall, indicated herein with 7" that define the cooking chamber 8. In this case the chamber 8 may have, for example, a height comprised between about 20 and about 30 cm (for example about 25 cm), a width comprised between about 80 and about 90 cm and a depth of about 40 cm.

[0052] In this embodiment the oven 1" comprises two sensor elements 10, two resistances 1l, two resistances 12 and two sensor elements 13. As can be noted, the resistances 11 are arranged side by side in the same substantially horizontal plane in the upper region of the chamber 8, in proximity to the upper wall 6; also the sensors 12 are positioned in the above-said upper region, in opposite areas of the chamber 8, preferably opposite side areas. The two resistances 12 are associated to the lower wall 7", in thermal contact with it, arranged side by side in the same substantially horizontal plane. Furthermore, to the wall 7" the two sensor elements 13 are associated, in opposite zones of the wall, preferably opposite lateral zones.

[0053] In the example depicted the lower wall 7" includes one part 14, extending for the entire length of the chamber 8, and two parts 15, extending for a corresponding portion of the part 14, wherein to each part

15 a corresponding sensor 13 is associated and the corresponding resistance 12 arranged below the part 15 and in contact with it. However it will be appreciated that different embodiments are possible. For example, in one embodiment, the wall 7" may include one part 14 and one part 15 both extending for the entire length of the chamber 8, or also the bottom wall 7" may be formed by flanking two walls of the type indicated with 7 in figure 1.

[0054] Furthermore, in this embodiment, the muffle 3", or the cooking chamber 8, is prearranged to be subdivided, by means of a removable dividing wall, indicated with 22, into two sub-chambers arranged side by side, indicated with 8' and 8". As can be seen, in this way, each sub-chamber 8' and 8" includes corresponding sensor elements 10 and 13, as well as corresponding resistances 11 and 12. In this embodiment the structure of the oven is preferably provided with a double door, for example a double wing door, that can be opened sideways (that is, each wing being hinged to rotate around a vertical axis, at a corresponding side of the structure 2).

[0055] When the removable dividing wall 22 is not present, the cooking functions provided according to the invention can be obtained in the entire cooking chamber 8. Vice versa, in the presence of the above-said dividing wall 22, the two sub-chambers 8' and 8" are available, each providing the functions envisaged according to the invention. Naturally, in this embodiment, the control system 9 is prearranged to allow management both of the joint functioning of all resistances 11 and 13, and of the separate functioning of the resistances 11 and 13 of the sub-chamber 8', on one side, and of the resistances 11 and 13 of the sub-chamber 8" on the other side.

[0056] Figure 4 represents a further possible embodiment of the invention. Also in such figure the same reference numbers of figures 1-3 are employed, to indicate elements technically equivalent to those previously described.

[0057] In this embodiment the structure of the cooking appliance according to the invention is essentially made up of a cooking surface, indicated with 30 as a whole, and of a hood, indicated with 40 as a whole, defining therebetween the cooking chamber 8. The cooking surface 30 may be integrated in a freestanding household appliance or, as in the case depicted, be arranged to be mounted or recessed in an opening A defined in a work surface B of a kitchen. Instead, the hood 40 is mounted movably, so that it is possible to shift it between a lowered position, as visible in the figure, and a raised position, not represented.

[0058] In this embodiment the lower wall of the cooking chamber 8, indicated with 70, is substantially constituted of a plate of nontoxic, heat conducing material, belonging to the cooking surface 30. Thus the above-said plate defines the bottom surface 7a, on which, when needed, the food to be cooked may be positioned directly, for example for Teppanyaki type cooking. For this purpose, in the example depicted, the structure 31 of the cooking surface 30 defines a lateral collecting basin 32, surrounding the above-said plate, for the purpose of easily collecting and/or recovering the liquids possibly released by food during cooking. Note that the wall 70 could be made in a way similar to the lower walls previously indicated with 7, 7' and 7", that is, be formed in several parts 14 and 15.

[0059] The resistance 12 is envisioned below the wall 70, in contact with it; the corresponding sensor element 13, belonging to the control system indicated with 9, is also associated to the wall 70.

[0060] The hood 40 has a structure 41 comprising the remaining walls 4-6 delimiting the cooking chamber 8, and it is opened below. In this embodiment the structure 41 of the hood 40 also has a front wall, not visible, which closes the front of the cooking chamber 8; preferably, such front wall is provided with an inspection window, for example formed by two or more parallel panes of glass.

[0061] As can be noted, at least one resistance 11 and at least one temperature sensor element 10 belonging to a control system 9' of the hood 40, are installed in the upper region of the cavity of the hood 40. The control system 9', in addition to managing the functions associated with the sensor 10 and with the resistance 11, controls also the aspiration functions of the hood 40.

[0062] The part of the cooking chamber 8 defined by the hood is in fluid communication with the inlet of a tube 42 for discharging the cooking fumes. For such purpose, a corresponding aspiration group may be arranged in the hood 40, not represented, as well as corresponding fume-filtering means, for example upstream from the inlet of the tube 42; in another possible embodiment, instead, the above-said aspiration and/or filtering means are mounted in a fixed position in the room wherein the apparatus 30, 40 are installed, that is, at the outlet end of the tube 42.

[0063] Corresponding support means are associated with the hood 40, not represented since they can be realized in any known way, arranged such that the hood itself is adapted to be moved - manually or in a motorized way - between the lowered position of figure 4 and a raised position. As can be inferred, in the lowered position the lower opening of the hood 40 is substantially closed by means of the wall 70 as well as, for a limited part, by the casing 41 of the surface 40.

[0064] The tube 42, for example a bellows type tube, is susceptible of varying configuration when the hood is moved between the lowered position and the raised position, that is, assuming an elongated configuration or a shortened configuration.

[0065] In the example depicted, the appliance formed by the cooking surface 30 and by the hood 40 has an overall control system constituted by two sub control systems indicated with 9 and 9' that interact with each other in order to allow - when the hood 40 is in the position in figure 4 - to obtain the cooking functions provided for according to the invention. Such control system 9, 9' is thus prearranged to control, within the same cooking process started by a user, the simultaneous activation of the resistances 11 and 12, with heating of the food posi-

tioned on the bottom surface 7a both through convection and through conduction, by heating the air in the chamber 8 through the resistance 11 and by heating the lower wall 70 through the resistance 12, respectively.

[0066] For this purpose the two sub-control systems 9 and 9' are connected together in signal communication, which can be obtained in a wired or a wireless manner. In this embodiment each sub-system 9 and 9' includes a corresponding control panel, but the functions allowed by the invention can preferably be set by only one of them, for example the control panel which is part of the sub-system 9.

[0067] The entire control system of the appliance can also be physically located in the cooking surface 30 or in the hood 40 (obviously with the exception of at least the temperature sensor 10 or 13, which will be mounted in the hood or in the cooking surface, respectively), and manage both the cooking function specifically provided according to the invention, and the aspiration functions of the hood 40. In this case a single control panel may optionally be provided for.

[0068] Preferably, irrespective of the approach chosen to obtain the control system (single or constituted by two sub-systems), such system will be prearranged to allow the independent functioning of the cooking surface 30 with respect to the hood 40, that is, to carry out traditional cooking processes when the hood is in the corresponding raised position.

[0069] Naturally, without prejudice to the principle of the invention, the details and the embodiments may vary appreciably with reference to what has been described by way of example only, without departing from the scope of the invention as defined by the annexed claims.

Claims

1. A food cooking appliance, having a cooking chamber (8) delimited by a plurality of walls (4-7; 4-7'; 4-7"; 4-6, 70) of a structure (2-3; 2-3'; 2-3"; 31, 41) of the appliance (1; 1'; 1", 30, 40), among which a thermally conductive lower wall (7; 7'; 7"; 70) defining a bottom wall (7a) of the cooking chamber (8), the appliance (1; 1'; 1", 30, 40) having
a control system (9; 9-9'), comprising at least one first temperature sensor (10) for detecting the air temperature in the cooking chamber (8),
at least one first heating element (11) arranged within the cooking chamber (8) and activable by the control system (9; 9-9'),
at least one second heating element (12) arranged under the cooking chamber (8) and activable by the control system (9; 9-9'),
wherein the control system (9; 9-9') is configured for controlling operation of the at least one first and at least one second heating element (11, 12), the at least one first heating element (11) being controllable for adjusting the air temperature in the cooking chamber (8) based on detections carried out through the at least one first temperature sensor element (10), **characterized in that** the bottom surface (7a) is made of a non-toxic material, adapted to receive directly thereon a food to be baked, **in that** the at least one second heating element (12) is in thermal contact with the lower wall (7; 7'; 7"; 70) and **in that** the control system (9; 9-9') further comprises at least one second temperature sensor element (13) for detecting the temperature of the lower wall (7; 7'; 7"; 70), the control system (9; 9-9') being prearranged for controlling operation of the at least one second heating element (12), and thus adjusting the temperature of the lower wall (7; 7'; 7"; 70), based on detections carried out through the at least one second temperature sensor element (13), the control system (9; 9-9') being also prearranged for controlling contemporaneous operation of the at least one first and the at least one second heating element (11, 13), to obtain a heating of the food by convection and by conduction, through heating of the air in the cooking chamber (8) caused by the at least one first heating element (11) and through heating of the lower wall (7; 7'; 7"; 70) caused by the at least one second heating element (12), respectively.

2. The appliance according to claim 1, wherein the at least one first heating element (11), and preferably also the at least one first temperature sensor element (10), is arranged in an upper region of the cooking chamber (8).

3. The appliance according to claim 1 or 2, wherein the lower wall (7; 7'; 7"; 70) has a thermal conductivity greater than that of a plurality of other walls (4-6) delimiting the cooking chamber (8).

4. The appliance according to claim 3, wherein the lower wall (7; 7'; 7"; 70) comprises at least one thermally conductive material, particularly a metal material or a metal alloy, and the walls of said plurality (4-6) comprise at least one thermally insulating material.

5. The appliance according to claim 4, wherein the at least one thermally insulating material is a material selected from glass materials, ceramic materials and refractory materials, such as a glass ceramic material, a tempered glass, a tempered crystal, a glass crystal, a foam glass.

6. The appliance according to any of the preceding claims, wherein the lower wall (7; 7'; 7") is formed by a plurality of superimposed parts (14, 15), including one first wall part (14), defining the bottom surface (7a), and at least one second wall part (15) which is arranged between the first wall part (14) and the at least one second heating element (12) in contact thereto.

7. The appliance according to claim 6, wherein the at least one second temperature sensor element (13) is operatively in contact with the first wall part (14).

8. The appliance according to claim 6 or 7, wherein the first wall part (14) is made of stainless steel and the second wall part (15) is made of aluminum.

9. The appliance according to any of the preceding claims, wherein a layer of thermally insulating material (21) is associated to the lower wall (7'), in a region thereof that is opposed relative to the bottom surface (7a) and below the at least one second heating element (12).

10. The appliance according to any of the preceding claims, wherein
the structure (2-3') of the appliance (1') comprises a muffle (3') defining a cavity (20), a plurality of said walls (4-6) other than the said lower wall (7') belonging to the muffle (3'),
said lower wall (7'), with at least one corresponding second heating element (12) and at least one corresponding second temperature sensor element (13), belongs to a partition shelf (7') that divides the cavity (20) into an upper cavity part and a lower cavity part, the upper cavity part constituting the said cooking chamber (8).

11. The appliance according claim 10, wherein the partition shelf (7') is removable from the cavity (20) and includes first electric interconnection means which, when the partition shelf (7') is inserted in a respective operating position within the cavity (20), are coupled to second electric interconnection means associated to the muffle (3').

12. The appliance according to any of claims 1 to 9, comprising at least two said first heating elements (11), at least two said first temperature sensor elements (10), at least two said second heating elements (12) and at least two said second temperature sensor elements (13), wherein the cooking chamber (8) is prearranged to be divided, by means of a removable partition wall (22), into two sub-chambers (8', 8") which are arranged side by side horizontally, each sub-chamber including at least one first heating element (11), at least one first temperature sensor element (10) and a respective portion of the lower wall (7") with corresponding at least one second heating element (12) and at least one second temperature sensor element (13).

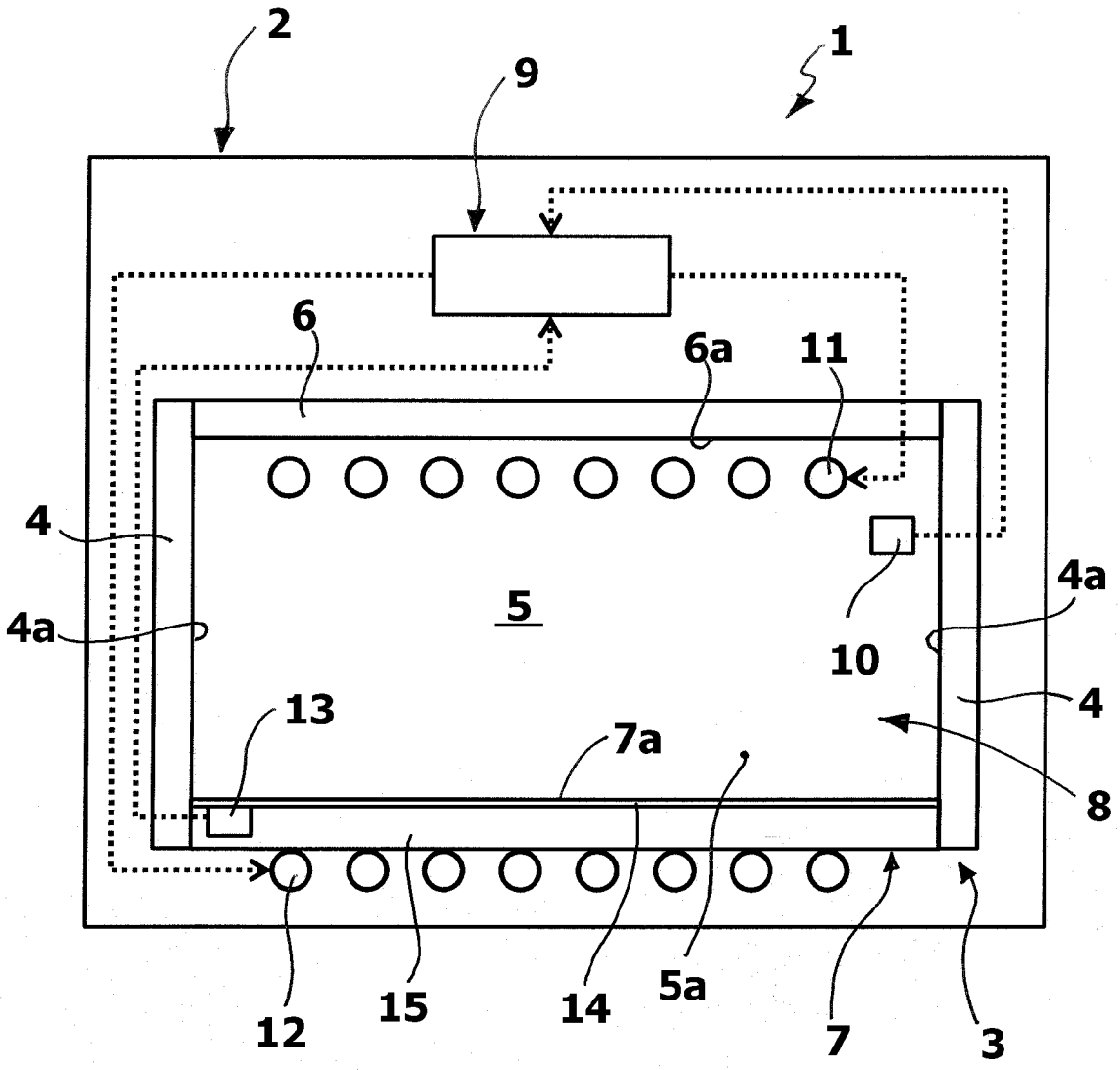

Fig. 1

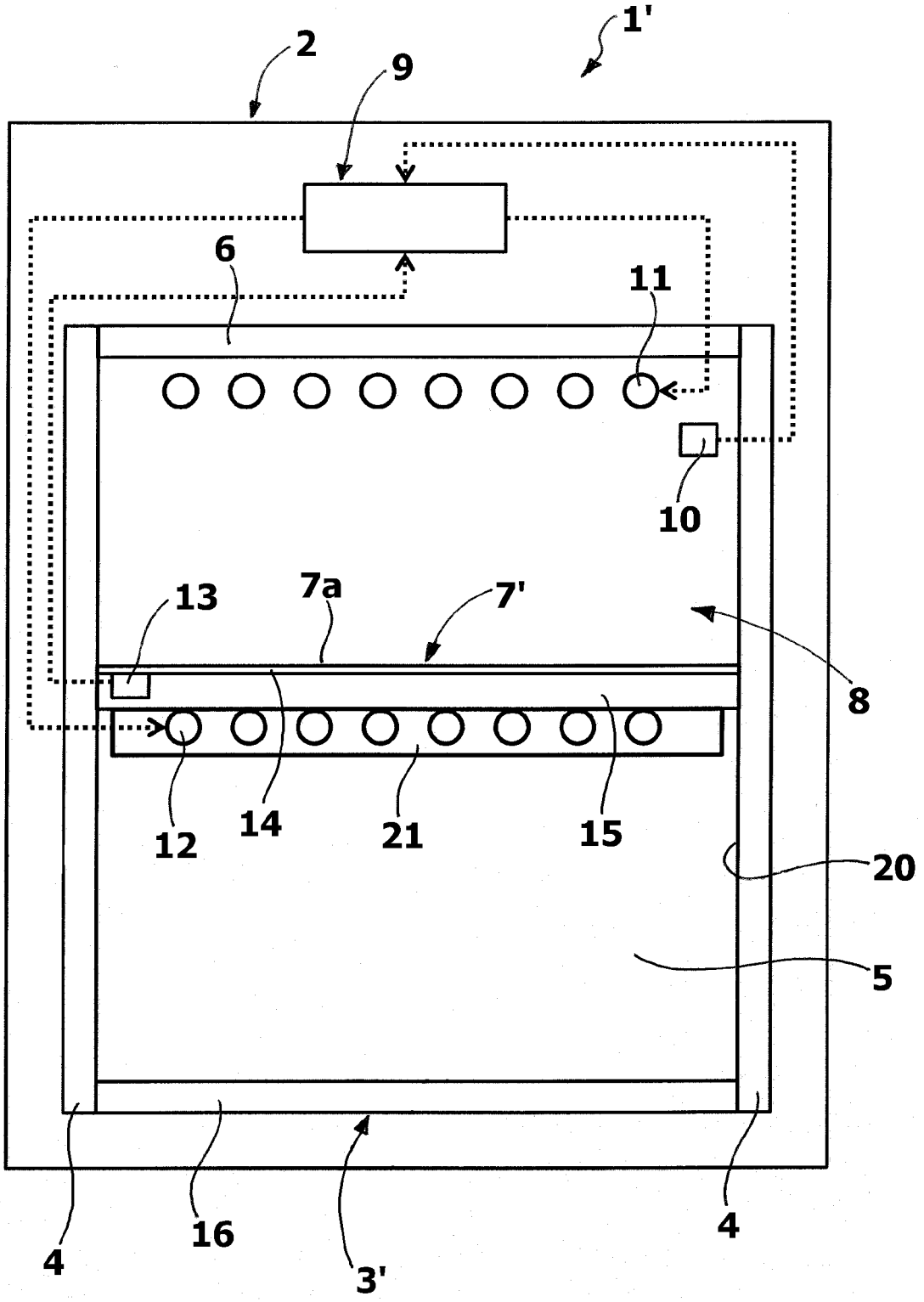

Fig. 2

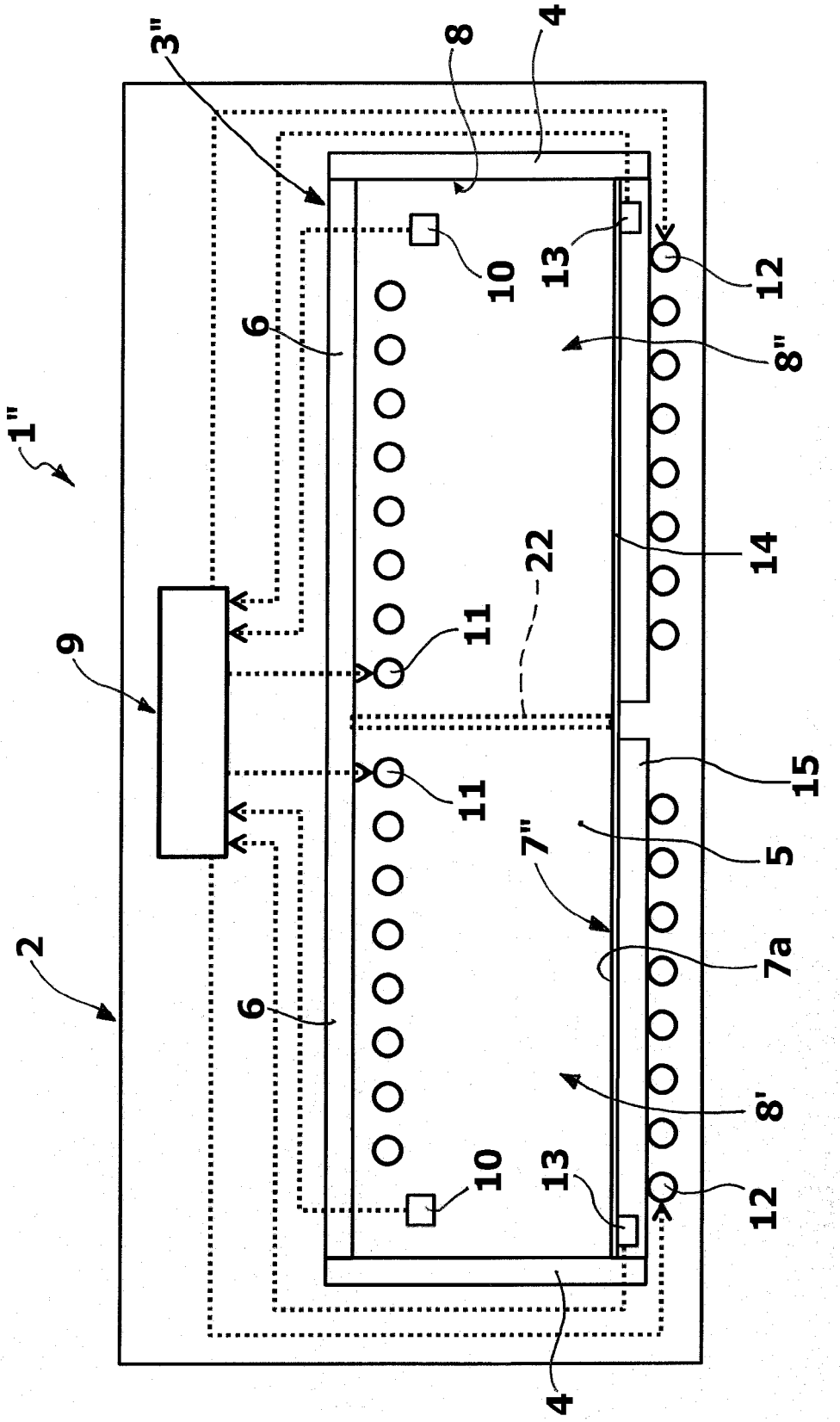

Fig. 3

Fig. 4

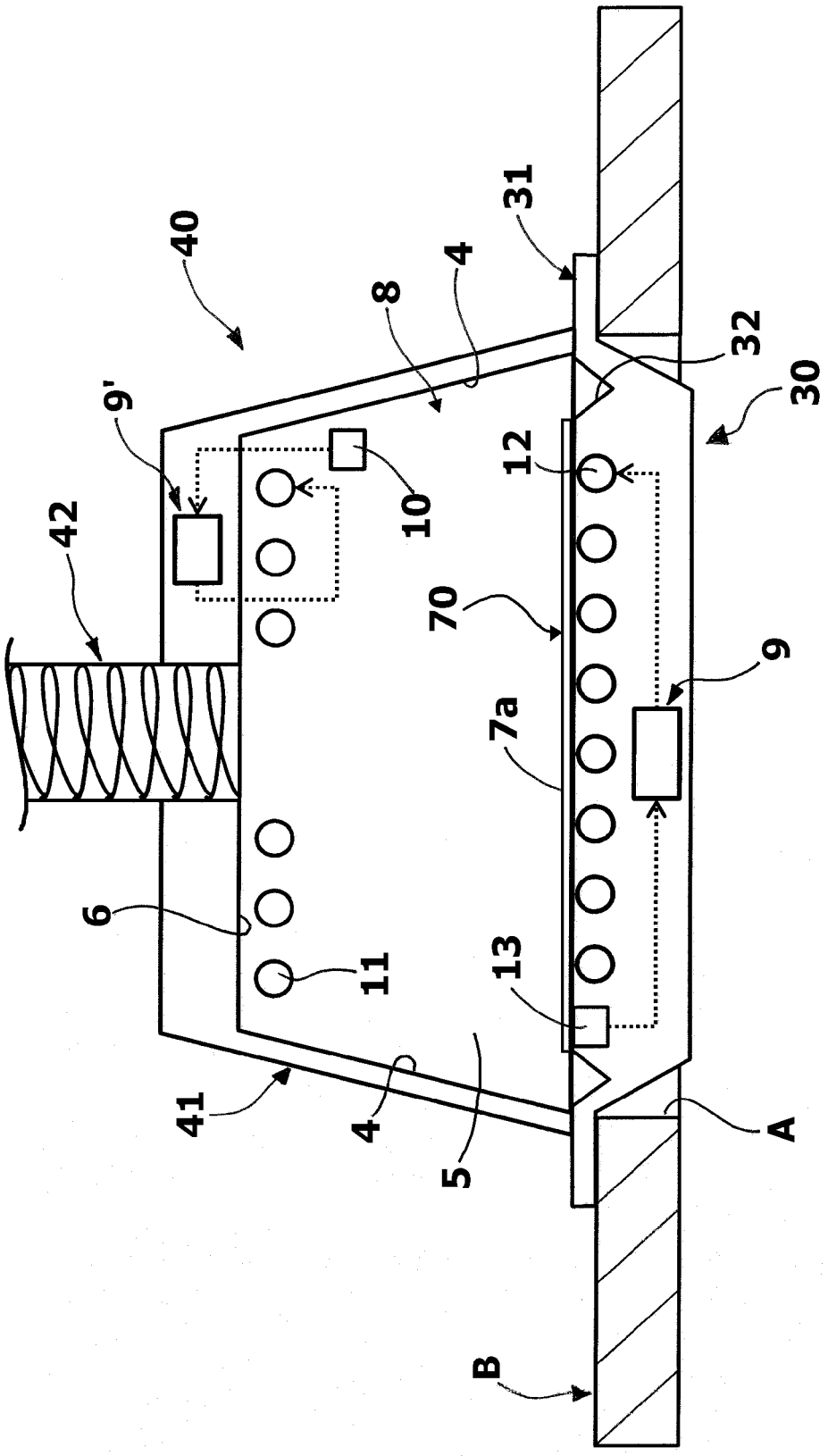

Europäisches Patentamt
European Patent Office
Office européen des brevets

EUROPEAN SEARCH REPORT

Application Number
EP 10 19 4579

DOCUMENTS CONSIDERED TO BE RELEVANT

Category	Citation of document with indication, where appropriate, of relevant passages	Relevant to claim	CLASSIFICATION OF THE APPLICATION (IPC)
X Y	US 5 605 092 A (RICCIO RENATO [US]) 25 February 1997 (1997-02-25) * figures 1-5 * -----	1,6-9,12 2-5,10,11	INV. F24C7/06 F24C7/08
Y	US 2008/149089 A1 (KARABIN TADEUSZ [US] ET AL) 26 June 2008 (2008-06-26) * figure 4 * -----	2	
Y	US 1 328 304 A (SNIDER JOHN L) 20 January 1920 (1920-01-20) * figure 1 * -----	3,4	
Y	US 6 101 930 A (VAN OVER CHARLES [US]) 15 August 2000 (2000-08-15) * claim 8 * -----	5	
Y	FR 2 621 984 A1 (LICENTIA GMBH [DE]) 21 April 1989 (1989-04-21) * claim 1; figures 1-2 * -----	11	
Y	EP 1 162 408 A1 (EUROFOURS BR SA [FR]) 12 December 2001 (2001-12-12) * figure 2 * -----	10	

TECHNICAL FIELDS SEARCHED (IPC)

A21B
F24C
F27B

The present search report has been drawn up for all claims

1

Place of search	Date of completion of the search	Examiner
The Hague	31 March 2011	Adant, Vincent

CATEGORY OF CITED DOCUMENTS

X : particularly relevant if taken alone
Y : particularly relevant if combined with another document of the same category
A : technological background
O : non-written disclosure
P : intermediate document

T : theory or principle underlying the invention
E : earlier patent document, but published on, or after the filing date
D : document cited in the application
L : document cited for other reasons

& : member of the same patent family, corresponding document

EPO FORM 1503 03.82 (P04C01)

ANNEX TO THE EUROPEAN SEARCH REPORT ON EUROPEAN PATENT APPLICATION NO. EP 10 19 4579

This annex lists the patent family members relating to the patent documents cited in the above-mentioned European search report.
The members are as contained in the European Patent Office EDP file on
The European Patent Office is in no way liable for these particulars which are merely given for the purpose of information.

31-03-2011

Patent document cited in search report	Publication date	Patent family member(s)	Publication date
US 5605092 A	25-02-1997	NONE	
US 2008149089 A1	26-06-2008	WO 2008079940 A2	03-07-2008
US 1328304 A	20-01-1920	NONE	
US 6101930 A	15-08-2000	WO 0204868 A1	17-01-2002
FR 2621984 A1	21-04-1989	DE 3735473 A1	03-05-1989
EP 1162408 A1	12-12-2001	FR 2810102 A1	14-12-2001

EPO FORM P0459

For more details about this annex : see Official Journal of the European Patent Office, No. 12/82