(19) Europäisches Patentamt
European Patent Office
Office européen des brevets

(11) EP 2 347 978 A1

(12) EUROPEAN PATENT APPLICATION

(43) Date of publication:
27.07.2011 Bulletin 2011/30

(51) Int Cl.:
B65F 3/00 *(2006.01)*

(21) Application number: **10190679.0**

(22) Date of filing: **10.11.2010**

(84) Designated Contracting States:
AL AT BE BG CH CY CZ DE DK EE ES FI FR GB GR HR HU IE IS IT LI LT LU LV MC MK MT NL NO PL PT RO RS SE SI SK SM TR
Designated Extension States:
BA ME

(30) Priority: **26.01.2010 NL 2004148**

(71) Applicant: **Terberg Machines B.V.**
3403 NL Ijsselstein (NL)

(72) Inventor: **Versteeg, Jan Paul**
6708 RV, Wageningen (NL)

(74) Representative: **Verdijck, Gerardus**
Arnold & Siedsma
Sweelinckplein 1
2517 GK Den Haag (NL)

(54) Loading system for lifting and emptying a container

(57) The loading system (4) comprises:
- a frame (12) with coupling means mountable on the collector;
- a lifting mechanism (14) connected to the frame (12) for lifting the container (6);
- a drive system (36) operatively connected to the lifting mechanism (14), the drive system (36) comprising:
- connecting means (40) for operatively connecting the drive system (36) to an external energy source (38);
- an electric motor (46) and control means (44) for controlling the electric motor (46);
- a hydraulic pump (48) driven by the electric motor (46) for hydraulically controlling a lifting cylinder (52) of the lifting mechanism (14); and
- a hydraulic fluid reservoir (54) operatively connected to the hydraulic pump (48).

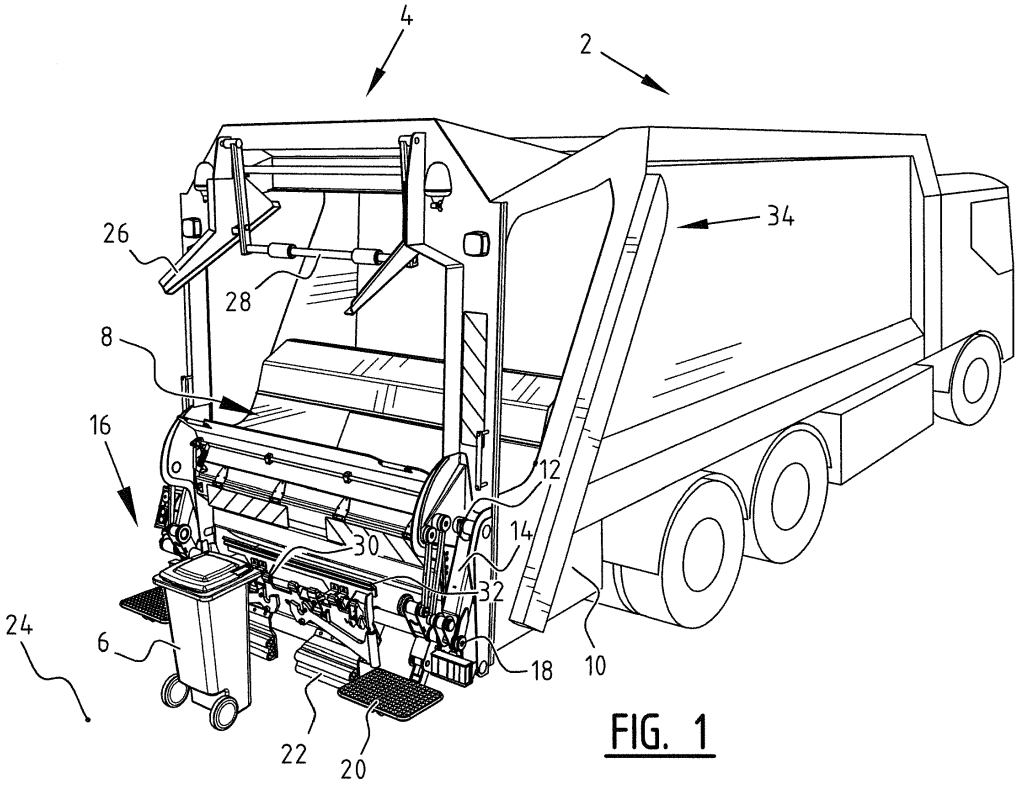

FIG. 1

EP 2 347 978 A1

Description

[0001] The present invention relates to a loading system for a refuse truck. Such a loading system is used particularly to empty containers, for instance filled with refuse, into a refuse truck or collection container.

[0002] Containers filled with for instance waste, such as domestic refuse, waste paper or green waste, are usually collected from company and private premises using refuse trucks. Such refuse trucks are usually provided in practice with a loading system with which the containers can be lifted and emptied into the refuse truck with a pivoting movement. Refuse trucks known in practice control the loading system for lifting the containers hydraulically via a so-called PTO pump from the fuel engine of the vehicle. The loading system depends on the fuel engine of the vehicle for its operation.

[0003] The present invention has for its object to provide a loading system with which it is possible to allow the loading system to function more independently of a vehicle.

[0004] This object is achieved with the loading system for lifting and emptying a container into a collector according to the invention. The loading system comprises:

- a frame with coupling means mountable on the collector;
- a lifting mechanism connected to the frame for lifting the container;
- a drive system operatively connected to the lifting mechanism, the drive system comprising:
    - connecting means for operatively connecting the drive system to an external energy source;
    - an electric motor and control means for controlling the electric motor;
    - a hydraulic pump driven by the electric motor for hydraulically controlling a lifting cylinder of the lifting mechanism; and
    - a hydraulic fluid reservoir operatively connected to the hydraulic pump.

[0005] By providing a collector, preferably in the form of a collection container or a refuse truck, containers provided with refuse, including domestic refuse, green waste and paper, can be emptied into this collector. The container can be lifted, tilted and emptied in efficient manner by connecting a frame of a loading system to this collector. This lifting mechanism is made possible using a drive system. The drive system here has an electric motor and control means therefor. An efficient and effective loading system is obtained through the use of an electric motor. Also achieved hereby is per se "clean" operation of the electrical drive during the emptying of containers. In the case of a refuse truck provided with a loading system according to the invention this means that, during collection of for instance domestic refuse, there is no emission of contaminating substances in residential areas where the refuse is being collected. A further additional advantage, when use is made of an electrical drive, is that the noise production is also reduced. The connecting means of the loading system connect the drive system to an external energy source during use. This is for instance a battery of a refuse truck. This may also involve connection to a charging system of a rechargeable battery or accumulator provided in the loading system itself. By providing the electric motor with control means the electric motor can be controlled on the basis of demand. According to the invention the electric motor is operatively connected to the hydraulic pump for driving the lifting mechanism. A lifting cylinder is hereby controlled hydraulically such that the lifting mechanism performs the desired lifting movement. The hydraulic pump is operatively connected here to a hydraulic fluid reservoir. This achieves that the loading system can operate more independently, the advantage of using a hydraulic pump hereby being that a container is emptied better, for instance by "shaking" the container, so that it can thereby be set down again having been better emptied.

[0006] The loading system according to the invention is therefore provided with a combined electro-hydraulic drive. By providing a hydraulic fluid reservoir this drive operates independently of its setting, for instance a refuse truck provided therewith. This further achieves that the loading system can function independently of the propulsion of such a refuse truck, i.e. independently of a fuel engine and/or electrical drive of the vehicle. The drive of the vehicle does not therefore have to remain active to allow the loading system according to the invention to function.

[0007] By providing the frame with coupling means it is also a possible to for instance transfer a loading system from a refuse truck provided with a fuel engine to a refuse truck provided with an electrical drive. Additional advantages of providing a more independent loading system according to the invention is that relatively few operations are necessary to connect the loading system to a refuse truck, since no hydraulic connection need for instance be made. This has the further additional advantage that there is hereby also less risk of leakage of for instance the hydraulic fluid. Locating and subsequent repair of malfunctions are also greatly simplified in that the different systems operate independently of each other.

[0008] In addition, the drive can be utilized in optimal manner through the use of electro-hydraulic driving of the loading system according to the invention. In conventional drives, in which use is made of a fuel engine, this fuel engine will not operate in all cases at the optimal level of operation. The efficiency of the loading system according to the invention can hereby be further increased. In the case of an electrically driven refuse truck a fully electrically driven system is obtained with a loading system according to the invention, since the hydraulic fluid for the loading system remains wholly internal, preferably even wholly within the loading system. This ensures that the advantages of a fully electrically driven

system are realized, while retaining the properties of the hydraulic lifting system with the lifting cylinder for emptying and shaking the container.

[0009] The lifting mechanism is preferably provided with a first and a second loading seat. This achieves that two containers can be emptied simultaneously, wherein these containers are of the two-wheel type. The two loading seats operate independently here. This means that one loading seat can be used for emptying, while another is utilized to place a container still to be emptied, or the two loading seats are emptying an individual container simultaneously. It is preferably also possible for the two loading seats to operate synchronously to empty a single four-wheel type of container. The control is preferably such that the loading system according to the invention can be set to independent or synchronous operation in accordance with to the wishes of the user.

[0010] A further advantage of using an electro-hydraulic drive in the use of a loading system according to the invention is that it also retains the robustness of conventional loading systems. This is important in the case, among others, of collisions or crashes of the loading system as may occur when a refuse truck provided with such a loading system reverses.

[0011] In an advantageous preferred embodiment according to the present invention the system comprises a second electric motor operatively connected to a second loading seat.

[0012] With the embodiment of the drive system by providing a separate electric motor per loading seat, therefore in the case of two loading seats also two electric motors, an accurate control of the lifting mechanism is realized. With synchronous operation at the two positions a more effective lifting movement is likewise realized by the lifting mechanism, for instance in respect of the discharge of heat produced during lifting, when two electric motors and two hydraulic pumps are used.

[0013] A further additional advantage obtained by also controlling separate loading seats individually with a motor and a pump is the noise reduction. This is realized due to the absence of flow control valves, whereby the typical hissing sound associated therewith no longer occurs. Energy loss and heat development are also reduced, since it is possible according to the invention to dispense with hydraulic flow control valves and/or splitter valves. Restrictions and resistances are hereby reduced significantly. This results in an energy-efficient system with an increased operational reliability due to the reduction of the number of components susceptible to malfunction. Surprisingly, it has further been found that, when a separate motor is applied, the energy consumption per loading seat is reduced compared to conventional systems with a central motor for all loading seats. This is realized in that the separate motors can be adjusted to the specific load on the loading seat, while the conventional system must support a wider range of loads at the expense of the effectiveness of the drive.

[0014] The loading system preferably further comprises a controller for controlling the first and second electric motor such that both an independent and synchronous operation of the first and second loading seat are possible. A maximum flexibility of the loading system according to the invention is in this way obtained.

[0015] The at least one electric motor is preferably also a three-phase motor. In the case of an embodiment with two loading seats which are individually controlled with an electric motor, both motors are preferably embodied as a three-phase motor. Use is advantageously made here of a three-phase asynchronous motor without carbon brushes. Sparking and wear are hereby prevented. A further advantage is that, in contrast to DC motors used in conventional systems, such three-phase motors do not display any significant switch-on peaks during startup under load. The on-board electrical system is hereby not loaded unnecessarily heavily and a kind of "soft" start is obtained without a reduction of the oil flow being required as in conventional systems and with additional losses.

[0016] The motors are preferably powered directly from the battery voltage via the motor controller. No additional components are hereby required and an effective and robust system is obtained with which containers can be emptied when a vehicle motor is switched off.

[0017] In an advantageous preferred embodiment according to the present invention the hydraulic fluid reservoir for the drive system is provided in the loading system.

[0018] The independent operation of the loading system of for instance the refuse truck is further enhanced by providing the loading system according to the invention with a fluid reservoir. The fluid reservoir is preferably provided in the interior of one or more parts of the frame. By providing the fluid reservoir in the interior of one or more parts of the profile, for instance in the interior of a tubular profile, a compact loading system is obtained which also attains a great independence due to a reservoir being by provided therein.

[0019] In a further advantageous preferred embodiment according to the present invention the external power supply comprises a battery of a refuse truck. A continuous connection to a power supply is realized by connecting the drive system of the loading system to the battery of a refuse truck via the connecting means. Such a battery of a refuse truck can be used in an electrically driven refuse truck as well as in a fuel-driven refuse truck.

[0020] In an advantageous preferred embodiment the battery comprises a 24 Volt battery. Hazardous situations for users and mechanics are avoided by using a 24 Volt system in the preferred embodiment according to the invention. Worker-friendly conditions are hereby realized. Such a 24 Volt system can advantageously be provided in a refuse truck driven by a combustion engine. Other voltages are possible for the system according to the invention. When the loading system according to the invention is for instance used in an electrically driven vehicle, the system can advantageously be provided operating at a different voltage.

[0021] The control means for controlling the at least one and preferably two electric motors are preferably connected operatively and in direct manner to the battery. This means that the motor controller forming a substantial part of the motor control means is powered directly from the battery and that a converter need not therefore be provided which converts the battery voltage in use, for instance 24 V, to a higher voltage for the purpose of the electric motor. This limits the number of parts, and therefore cost and complexity. In addition, safety is achieved by using the lower voltages as described above.

[0022] In a further advantageous preferred embodiment according to the present invention the lifting mechanism is provided with a sensor connected operatively to the control means. Through the use of sensors the control means can control the drive on the basis of loads occurring on the lifting mechanism. An efficient lifting mechanism and associated lifting movement is hereby realized.

[0023] In a further advantageous preferred embodiment according to the present invention hydraulic fluid is carried through the hydraulic pump when an emptied container is set down such that energy is generated or recovered.

[0024] By allowing the hydraulic fluid to flow through the pump during the setting down, it will at that moment function as a kind of dynamo with which a battery can for instance be charged. More lifting movements are hereby possible with the same amount of energy.

[0025] The invention further relates to a refuse truck provided with the loading system as described above.

[0026] Such a refuse truck provides the same effects and advantages as those stated in respect of the loading system.

[0027] It has been found that such a refuse truck according to the present invention can advantageously be combined with the modular embodiment of the loading system as described above. The system can hereby be operatively connected to the vehicle by connecting preferably only a power supply cable between system and vehicle. The vehicle can hereby be provided in relatively simple manner with another loading system. This further increases the flexibility of both the system and the vehicle.

[0028] The invention further also relates to a method for emptying a container, comprising of providing a loading system as described above.

[0029] Such a method provides the same effects and advantages as those stated in respect of the loading system and the refuse truck.

[0030] Further advantages, features and details of the invention are elucidated on the basis of the diverse preferred embodiments thereof, wherein reference is made to the accompanying drawings, in which:

- figure 1 shows a loading system according to the invention;
- figure 2 shows a schematic outline of the electro-hydraulic drive of the loading system of figure 1;
- figure 3 shows a schematic outline of an alternative drive;
- figures 4 and 5 show views of a loading system with the diagram of figure 3.

[0031] A refuse truck 2 (Figure 1) provided with a loading system 4 is used to empty containers 6. Containers 6 are, among others, containers of the type EN 840-1, -2, -3 and -4 with respective volumes of 80-360 litres, 500-1200 litres, 770, 1100 and 1300 litres, and 750-1700 litres. In addition, it is also possible using shown refuse truck 2 to place refuse bags therein. Container 6 is emptied into a large loading opening 8. This loading opening 8 is bounded on the sides by side walls 10 of refuse truck 2. In the shown embodiment loading system 4 is provided for this purpose with the same width as refuse truck 2, whereby uprights 12 of loading system 4 are situated substantially in line with side wall 10 of refuse truck 2. Mounted on uprights 12 are lifting arms 14 with which engaging mechanism 16 can be moved for the purpose of lifting a container 6. When a container 6 is emptied, engaging mechanism 16 makes a pivoting movement with lifting shaft 18, wherein container 6 is carried upside down into loading opening 8. Refuse truck 2 is provided with two footboards 20 on which for instance a dustman can take up position during movement of refuse truck 2. Refuse truck 2 is also provided with two rubber buffers 22 on which a container 6 rests during the pivoting movement. These cushions 22, with the plate on which they are mounted, are also embodied such that they can yield to some extent when they come into contact with obstacles on ground surface 24. Loading system 4 is also provided with two guides 26 attached to the top part of loading system 4. The lid of a container can be pushed open with these guides 26 during the pivoting movement such that the content of container 6 disappears into loading opening 8. Likewise arranged on the top part of loading system 4 is a stop member 28, substantially along the whole width of loading opening 8. This stop member 28 prevents container 6 continuing to rotate during the pivoting movement. In the case of such a continued rotation container 6 would, without stop member 28, disappear completely into loading opening 8, and thereby into the interior of refuse truck 2.

[0032] Engaging mechanism 16 engages using a comb 30 under the edge of container 6. During lifting of container 6 with comb 30 the clamping plate or enclosing plate 32 closes, whereby the container edge is clamped between comb 30 and clamping plate 32. A container 6 cannot detach from comb 30 due to clamping plate 32. Lifting shaft 18 extends along the whole width of loading opening 8, and therefore over the whole width of refuse truck 2. Loading system 2 is connected releasably to vehicle 2 with couplings 34.

[0033] The electro-hydraulic drive system 36 is supplied with power from a battery/dynamo 38 in vehicle 2. In the shown embodiment battery 38 is a 24 Volt battery.

Between vehicle 2 and loading system 4 a coupling 40 is provided between drive system 36 and battery 38. Loading system 4 is operatively connected to refuse truck 2 via coupling 40 in a manner such that it can be uncoupled, and for instance be exchanged, in simple and efficient manner. Power is fed from coupling 40 to controller 42 and a first motor controller 44. Motor controller 44 is controlled from controller or control 42. Controller 42 controls, among other things, the independent or synchronous operation of the two loading seats of the shown loading system 4. Motor controller 44 controls electric motor 46. Electric motor 46 drives hydraulic pump 48, which carries oil through valve 50 to lifting cylinder 52 of loading system 4 during a lifting movement. The oil comes from oil reservoir 54 provided in loading system 4. Oil reservoir 54 is operatively connected to pump 48 with supply conduit 56. Return conduit 58 is used during setting down of an emptied container.

[0034] In an alternative embodiment according to the invention (not shown) the returned oil is also carried through pump 48, wherein this latter acts as dynamo for generating energy.

[0035] From coupling 40 energy is further provided to a second motor controller 60, which is likewise connected to controller 42. From motor controller 60 the second electric motor 62 is controlled and in turn drives hydraulic pump 64. During a lifting movement pump 64 carries oil through valve 66 to second lifting cylinder 68 of loading system 4. Pump 64 is also provided with a supply conduit 56 and oil is fed back from valve 66 to reservoir 54 via return conduit 58.

[0036] If a refuse truck 2 is provided with a loading system 4, during emptying of a container 6 this container is placed in a position such that it can be picked up by a loading seat of loading system 4. For this purpose electric motor 46, 62 is controlled from motor controller 44, 60 under the control of a controller 42. The necessary power supply is provided from a battery 38. Electric motor 46, 60 drives a hydraulic pump 48, 64, wherein oil from reservoir 54 is carried via supply conduit 56 through valve 50, 66 to lifting cylinder 52, 68 of loading system 4. The lifting mechanism makes a lifting movement due to supply of oil to lifting cylinder 52, 68. Container 6 is emptied into the interior of refuse truck 2 by this lifting movement. The emptied container 6 is then set down by a reverse movement of the lifting mechanism, wherein lifting cylinder 52, 68 is returned to the starting position in which oil is fed back via valve 50, 66 to reservoir 54 via return conduit 58. Container 6 is then re-placed and a subsequent container 6 to be emptied can be placed. Due to the independent operation of the drive system a motor of refuse truck 2 will be deactivated during emptying of container 6, for instance in the case the containers being emptied are located in a residential area.

[0037] An alternative drive system 70 (figure 3) comprises a battery 71. System 70 is controlled from controller 72. Controller 72 controls motor controllers 74, 76. In the shown embodiment motor controllers 74, 76 are direct current - three-phase alternating current controllers preferably provided with a safety relay. Controllers 74, 76 control a high torque at a relatively high efficiency, wherein a low starter current during a lifting movement ensures that there is no unnecessarily heavy load on the on-board electrical system. Controllers 74, 76 control asynchronous motors 78, 80 which are provided with a sensor 82, 84 for measuring the motor revolutions. Hydraulic pumps 86, 88 are driven by motors 78, 80. System 70 further has valve blocks 90, 92 consisting of switch valves, and a flow control valve for the descending movement. If desired, additional cylinders can be controlled, for instance for an adjustable container stop and/or locking cylinder. Hydraulic pressure sensors 94, 96 deactivate the drive when the maximum lifting force is reached, this in contrast to conventional safety valves which consume a relatively large amount of energy.

[0038] Cylinders 98, 100 provide for the lifting and/or tilting movement of the container. A linear or rotation position sensor 102, 104 is further provided for the lifting and tilting frame. Owing to drive 70 it is possible to suffice with a relatively small oil reservoir 106. Connection 108, 110 between controller 72 and motor controllers 74, 76 is preferably a CAN communication connection.

[0039] In a currently preferred embodiment a refuse truck is provided with a loading system with drive system 70 (figures 4 and 5) . System 70 makes use here of the power supply from battery 71 of the vehicle. In the shown embodiment the connection is made via plug 112 and cables 114, 116. Plug 112 forms the only connection between the vehicle and the loading system, at least for driving thereof.

[0040] System 70 can be used in a synchronous or parallel mode to empty large containers 118 (figure 4) as well as in an independent mode for emptying smaller containers 120 (figure 5).

[0041] The present invention is by no means limited to the above described preferred embodiments thereof. The rights sought are defined by the following claims, within the scope of which many modifications can be envisaged.

Claims

1. Loading system for lifting and emptying a container into a collector, comprising:

    - a frame with coupling means mountable on the collector;
    - a lifting mechanism connected to the frame for lifting the container;
    - a drive system operatively connected to the lifting mechanism, the drive system comprising:

        - connecting means for operatively connecting the drive system to an external energy source;

- an electric motor and control means for controlling the electric motor;
- a hydraulic pump driven by the electric motor for hydraulically controlling a lifting cylinder of the lifting mechanism; and
- a hydraulic fluid reservoir operatively connected to the hydraulic pump.

2. Loading system as claimed in claim 1, wherein the lifting mechanism comprises a first and a second loading seat.

3. Loading system as claimed in claim 1 or 2, wherein the control means control the lifting mechanism such that the first and second loading seats operate independently or synchronously.

4. Loading system as claimed in claim 2 or 3, further comprising a second electric motor operatively connected to the second loading seat.

5. Loading system as claimed in claim 4, further comprising a controller for controlling the first and second electric motor such that both an independent and synchronous operation of the first and second loading seat are possible.

6. Loading system as claimed in one or more of the claims 1-5, wherein the at least one electric motor is a three-phase motor.

7. Loading system as claimed in one or more of the claims 1-6, wherein the hydraulic fluid reservoir is provided in the loading system.

8. Loading system as claimed in claim 7, wherein the fluid reservoir is provided internally in one or more parts of the frame.

9. Loading system as claimed in one or more of the claims 1-8, wherein the external power supply comprises a battery of a refuse truck.

10. Loading system as claimed in claim 9, wherein the battery comprises a 24 Volt battery.

11. Loading system as claimed in claim 9 or 10, wherein the motor control means for controlling the at least one electric motor is connected for direct operation to the battery.

12. Loading system as claimed in one or more of the claims 1-11, wherein the lifting mechanism is provided with sensors connected operatively to the control means.

13. Loading system as claimed in one or more of the claims 1-12, wherein hydraulic fluid is carried through the hydraulic pump when an emptied container is set down such that energy is recovered.

14. Refuse truck provided with a loading system as claimed in one or more of the claims 1-13.

15. Method for emptying a container, comprising of providing a loading system as claimed in one or more of the claims 1-13.

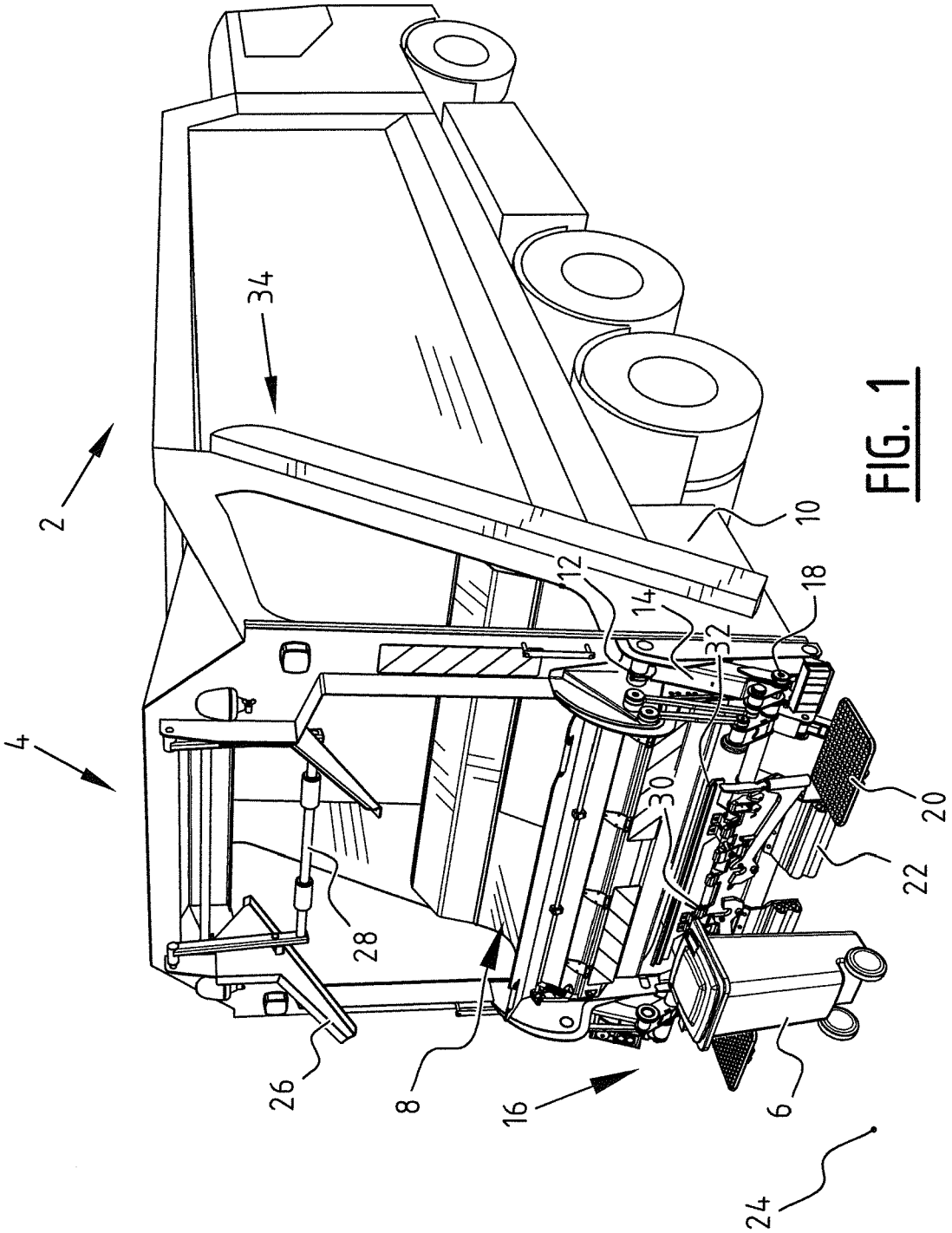

FIG. 1

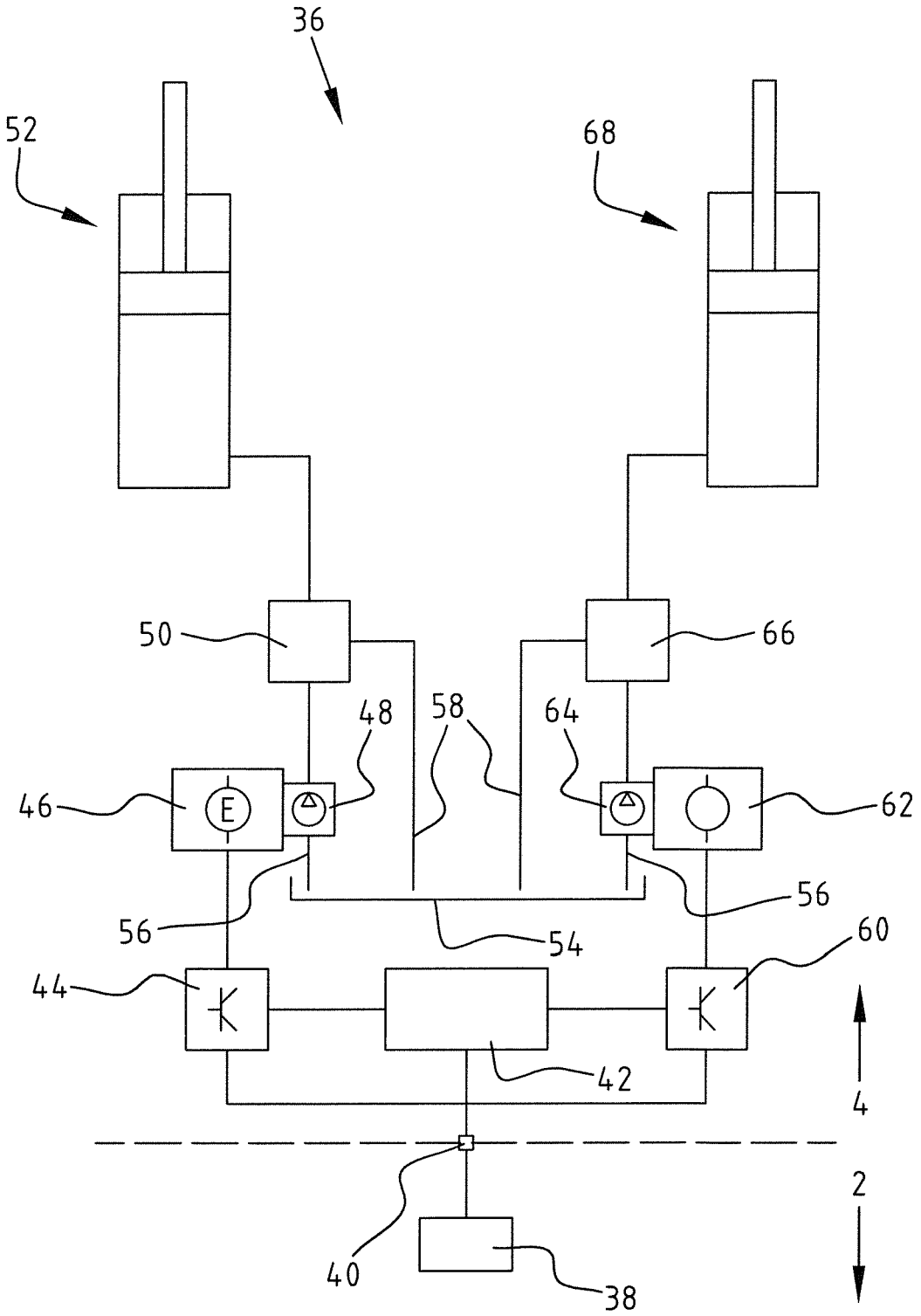

FIG. 2

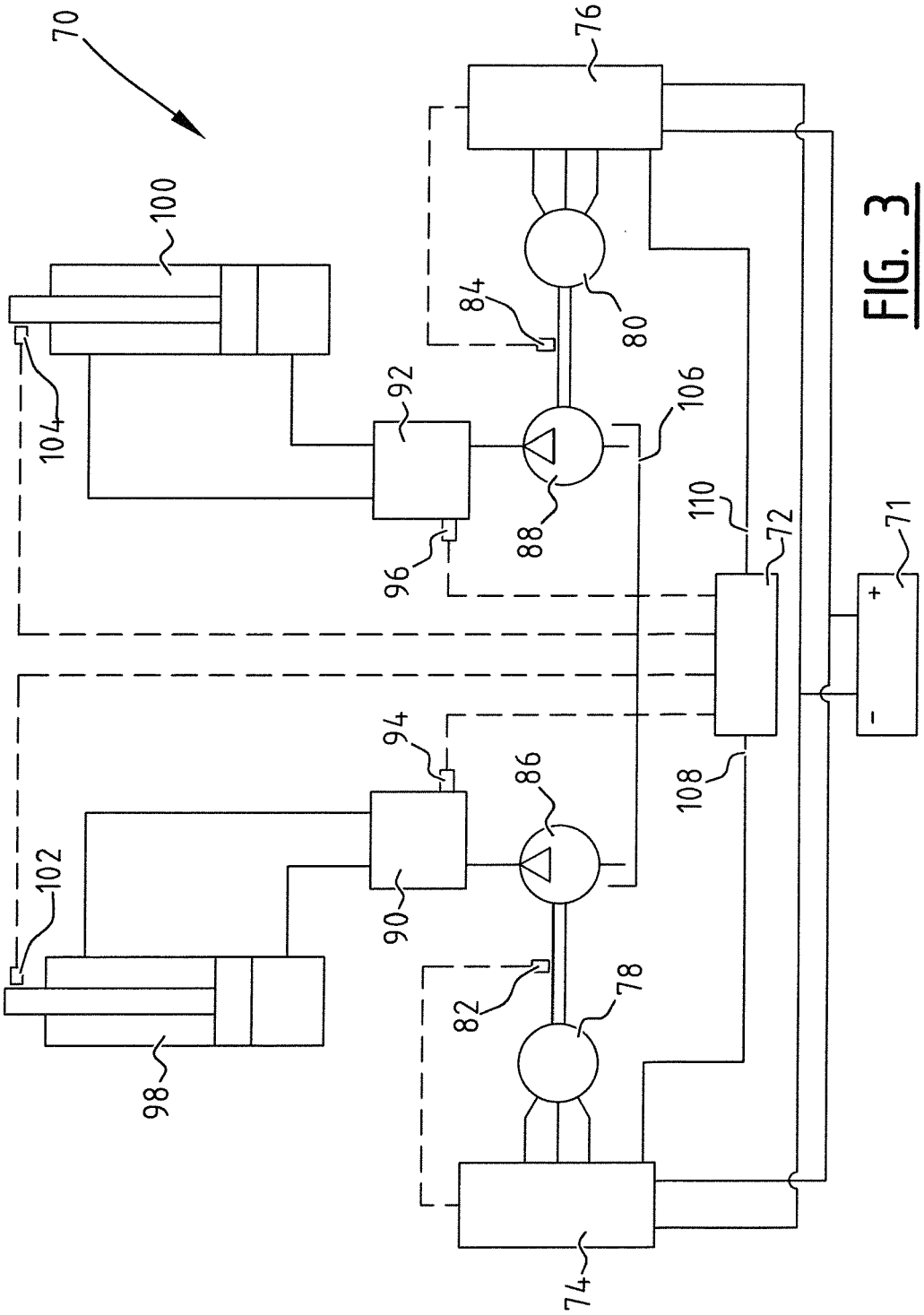
70
76
100
84
80
104
92
106
88
96
110
72
71
+
-
94
86
108
102
90
82
78
98
74

FIG. 3

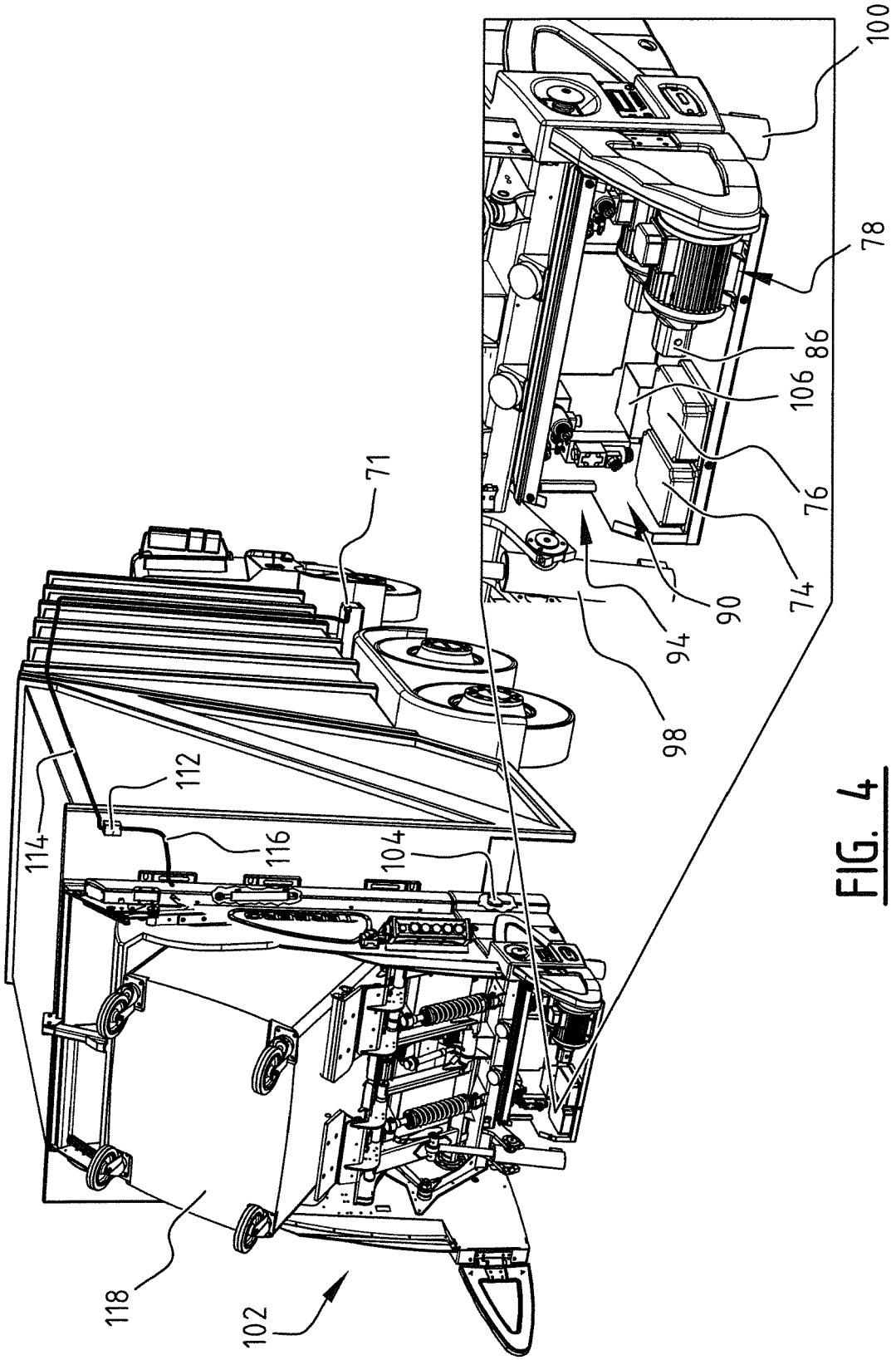

FIG. 4

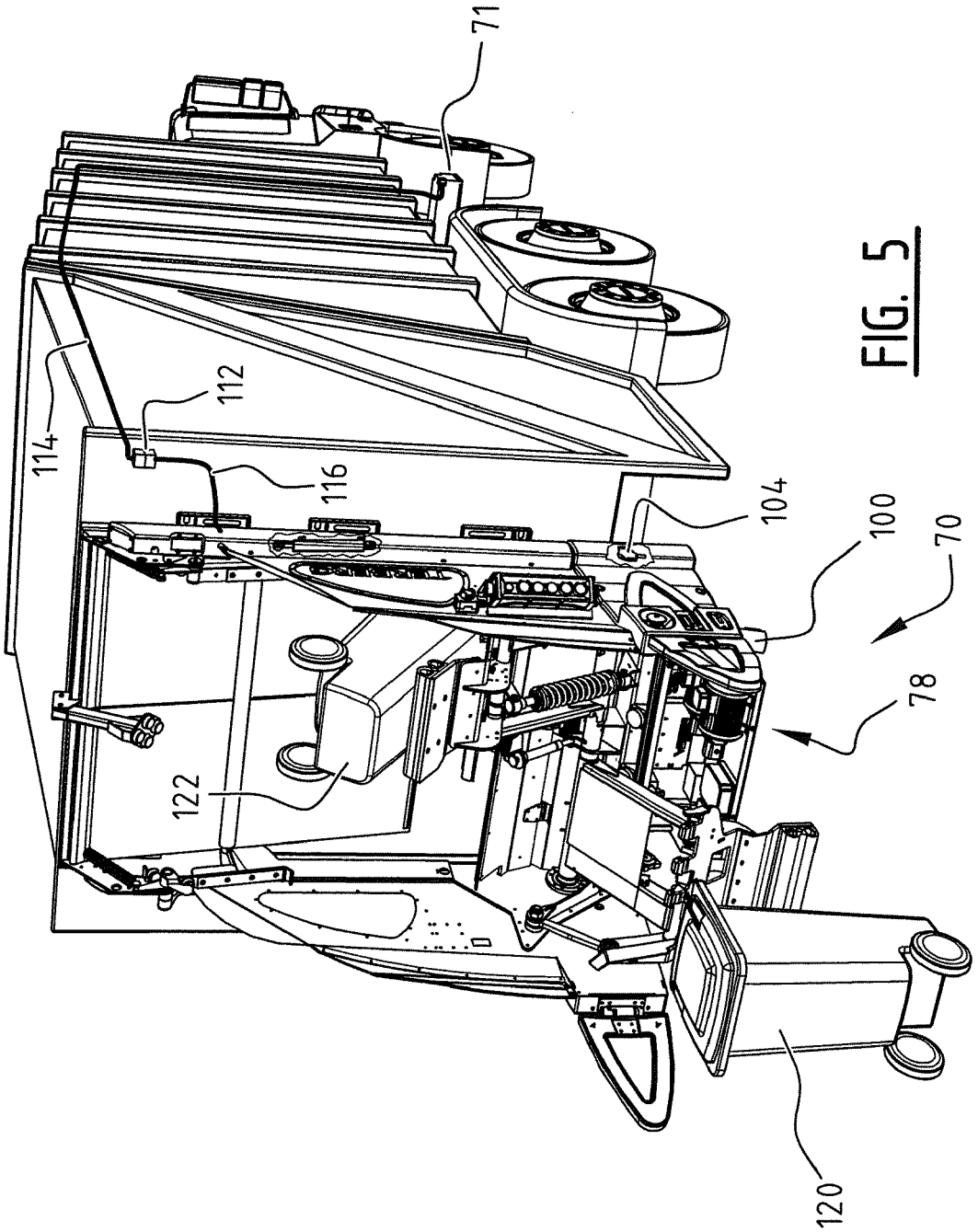

FIG. 5

Europäisches Patentamt
European Patent Office
Office européen des brevets

EUROPEAN SEARCH REPORT

Application Number
EP 10 19 0679

DOCUMENTS CONSIDERED TO BE RELEVANT

Category	Citation of document with indication, where appropriate, of relevant passages	Relevant to claim	CLASSIFICATION OF THE APPLICATION (IPC)
X A	GB 602 569 A (A. FRAZER-NASH) 28 May 1948 (1948-05-28) * page 3, line 100 - page 4, line 92 * * page 5, line 105 - line 129 * * figures 1,2 * -----	1-3,9, 14,15 4-8, 10-13	INV. B65F3/00
X A	EP 1 746 049 A1 (H. ARTMANN) 24 January 2007 (2007-01-24) * paragraph [0011] - paragraph [0017] * * figures 1,2 * -----	1,9,14, 15 2-8, 10-13	
A	DE 30 41 630 A1 (SCHÖRLING GMBH & CO. WAGGONBAU) 13 May 1982 (1982-05-13) * the whole document * -----	1-15	

TECHNICAL FIELDS SEARCHED (IPC)

B65F

The present search report has been drawn up for all claims

Place of search	Date of completion of the search	Examiner
The Hague	15 April 2011	Smolders, Rob

CATEGORY OF CITED DOCUMENTS

X : particularly relevant if taken alone
Y : particularly relevant if combined with another document of the same category
A : technological background
O : non-written disclosure
P : intermediate document

T : theory or principle underlying the invention
E : earlier patent document, but published on, or after the filing date
D : document cited in the application
L : document cited for other reasons
.....
& : member of the same patent family, corresponding document

1

EPO FORM 1503 03.82 (P04C01)

ANNEX TO THE EUROPEAN SEARCH REPORT ON EUROPEAN PATENT APPLICATION NO. EP 10 19 0679

This annex lists the patent family members relating to the patent documents cited in the above-mentioned European search report.
The members are as contained in the European Patent Office EDP file on
The European Patent Office is in no way liable for these particulars which are merely given for the purpose of information.

15-04-2011

Patent document cited in search report	Publication date	Patent family member(s)	Publication date
GB 602569 A	28-05-1948	NONE	
EP 1746049 A1	24-01-2007	AT 502217 A1	15-02-2007
DE 3041630 A1	13-05-1982	NONE	

EPO FORM P0459

For more details about this annex : see Official Journal of the European Patent Office, No. 12/82