(19) Europäisches Patentamt
European Patent Office
Office européen des brevets

(11) EP 2 353 449 A1

(12) EUROPEAN PATENT APPLICATION

(43) Date of publication:
10.08.2011 Bulletin 2011/32

(51) Int Cl.:
A47B 88/20 *(2006.01)*

(21) Application number: **11153228.9**

(22) Date of filing: **03.02.2011**

(84) Designated Contracting States:
AL AT BE BG CH CY CZ DE DK EE ES FI FR GB GR HR HU IE IS IT LI LT LU LV MC MK MT NL NO PL PT RO RS SE SI SK SM TR
Designated Extension States:
BA ME

(30) Priority: **04.02.2010 IT MI20100164**

(71) Applicant: **ICAS S.r.l.**
26010 Vaiano Cremasco (CR) (IT)

(72) Inventor: **Cabini, Antonio**
26013, Crema (Cremona) (IT)

(74) Representative: **Botti, Mario**
Botti & Ferrari S.r.l.
Via Cappellini, 11
20124 Milano (IT)

(54) **Extractable drawer for pharmacy furniture with integrated card holder**

(57) Extractable drawer (1), in particular for pharmacy furniture, in which the side (3) of the drawer comprises a load-bearing profile (8), and at least one part of the upper face of the side (3) is formed by a card-holding element (10, 20) integrated in the side itself.

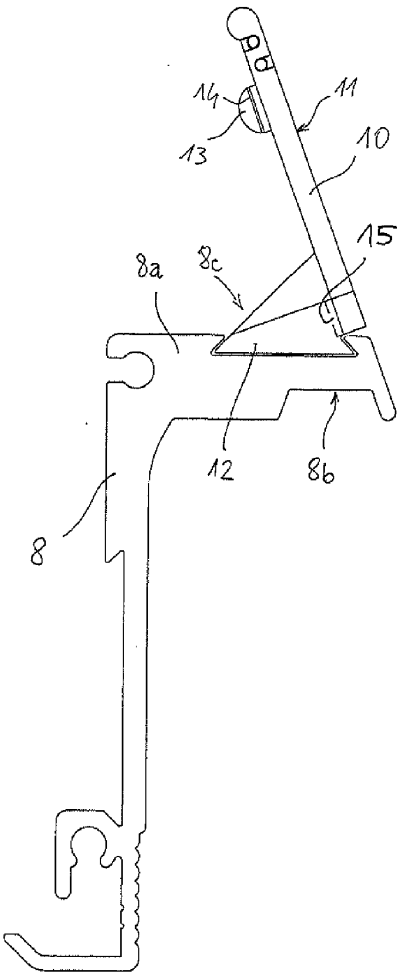

FIG. 2

EP 2 353 449 A1

Description

Field of application

[0001] The invention concerns the field of extractable drawers, in particular the field of pharmacy drawers.

Prior art

[0002] In pharmacy drawers, each drawer is normally divided into a plurality of compartments through inner dividers, and each compartment is used to store a specific product. In order to rapidly identify and find the products, card-holders made of plastic that are hooked to the side of the drawer are currently used. Each card-holder substantially consists of a small plastic rectangle, sized so as to contain a product identification card. In a common embodiment, for example, the card-holder has a clip for hooking to the edge of the side of the drawer, or of one of the inner dividers; in the front part the card-holder has folded side edges (possibly forming a wing) for holding the card.

[0003] Such a solution, even with constructive and/or form variants, is practically of universal use. It has, however, the drawback of requiring the drawer to be equipped with a certain number of card-holders as accessories. Over time and with use the hooking clips can break or loosen, the card-holder can move, fall, etc... Another drawback, suffered, on the other hand, by the manufacturer, is that card-holders made in such a manner have undercut parts that make manufacturing through moulding more expensive.

[0004] Some manufacturers make drawers of aluminium or steel with sides made from transparent plastic, to see the products inside. This system, however, does not avoid the need of having separate plastic card-holders.

Summary of the invention

[0005] The purpose of the invention is to provide an improved cataloguing and rapid identification system for products contained in extractable drawers, particularly in the field of pharmacy furniture, avoiding the drawbacks previously mentioned.

[0006] The idea underlying the invention is to integrate the card-holder function in the side of the drawer itself. According to the invention, an extractable drawer, in particular for pharmacy furniture, has each side comprising a load-bearing profile and is characterised in that at least one part of the upper face of the side is formed by a card-holding element applied directly to said load-bearing profile.

[0007] The card-holding element comprises a plurality of seats for product identification cards. Preferably, the card-holding element comprises slots for the insertion of a predetermined number of said cards.

[0008] The card-holding element, according to another aspect of the invention, is inserted on the load-bearing profile substantially through a grooved profile coupling, able to slide in the longitudinal direction of the drawer, but suitable for stably holding the card-holder, which is perfectly integrated in the same structure of the side of the drawer.

[0009] The card-holding element is preferably in accordance with one of the following embodiments.

[0010] In a first embodiment, the card-holding element substantially forms the upper part of the side of the drawer. For example, the load-bearing profile has an upper wing comprising a longitudinal groove, and said card-holding element is substantially made as a side wall, for example of plastic, comprising a substantially flat panel portion and a base configured to engage the groove of the load-bearing profile.

[0011] In a second embodiment, the load-bearing profile extends for the full height and forms both the lower part of the side, which normally contains the stages of the telescopic guide, and the upper part of the side itself. The card-holding element is applied onto the upper part of the load-bearing profile, and is preferably represented by a plastic panel. The card-holding element, once applied, is spaced apart from the load-bearing profile, so that a housing space for the cards remains between the load-bearing profile and the card-holder. The load-bearing profile itself, in this second embodiment, acts as a rear pocket for the cards.

[0012] The load-bearing profile, in both the embodiments described above, is advantageously made of metal and can be for example of steel or aluminium

[0013] One of the characteristics of the invention lies in the modularity of the card-holding elements. The side of the drawer can be equipped with one or more card-holding elements, for example according to the first or the second embodiment mentioned above, close to one another in the length direction. One or more card-holding elements close to one another thus cover the entire length of the load-bearing profile i.e. the useful depth of the drawer. The card-holding elements can be made with standard dimensions, and applied to the profile in the amount necessary, in order to manufacture drawers with different sizes.

[0014] The invention has advantages from the point of view of both the manufacturer and the final user. Indeed, the user has the benefit of a more practical use, thanks to the elimination of the outer card-holders that are replaced by card-holders integrated in the side of the drawer. A first advantage for the manufacturer, is given by the fact that the card-holding panels do not have undercut faces and can therefore be moulded with a simple and unexpensive process; moreover, the modularity of the card-holders makes it possible to apply the invention to a wide array of drawers, in particular in the field of pharmacy furniture that requires great cataloguing diversification. A further advantage of the invention is that it makes it possible to improve the appearance of the side of the drawer. Indeed, the load-bearing function is given to the metal profile, whereas the card-holding element,

extending for the entire length of the side, can be made in any material (for example coloured plastic).

[0015] One object of the invention is also a card-holding element for an extractable drawer, particularly for pharmacy furniture, in accordance with the above disclosure. The card-holding element can be associated through a grooved coupling to a load-bearing profile that forms the structure of each side of the drawer, and comprising slots for the insertion of a predetermined number of product identification cards. A further object of the invention is pharmacy furniture, comprising a plurality of drawers equipped with the described card-holder integrated in the side.

[0016] The advantages of the invention shall become even clearer from the following description of a preferred non-limiting embodiment, and with reference to the attached drawings.

Brief description of the drawings

[0017]

Fig. 1 shows a drawer for pharmacy furniture, of the type with a three-stage telescopic guide, with card-holding elements integrated in the sides according to one of the embodiments of the invention.

Fig. 2 represents a cross-section of the side of the drawer of Fig. 1, in a first embodiment of the invention.

Fig. 3 is a section view that is analogous to that of Fig. 2, in a second embodiment of the invention.

Figs. 4 and 5 represent views of the card-holding element according to the embodiment of Fig. 2.

Figs. 6 and 7 represent views of the card-holding element according to the embodiment of Fig. 3.

Fig. 8 shows a detail of the side of the drawer.

Detailed description of a preferred embodiment

[0018] Fig. 1 shows an extractable drawer 1 for pharmacy furniture, comprising a front panel 2, sides 3 and a bottom panel 4 and one or more internal dividers 5, that define the spaces for containing drugs.

[0019] The drawer is mounted on telescopic guides, for example of the three-stage type, represented by respective metal sections 6, 7 and 8, which slide with respect to one another on bearings. One of the bearings 9 is visible in the figures. The telescopic guides are made according to *per* se known technique and are not essential for the present invention, and therefore they shall not be further described.

[0020] The profile 8, which forms the third stage of the respective telescopic guide (right or left), represents the load-bearing structure of the side of the drawer and is normally made of steel or aluminium. According to the invention, one or more card-holding elements 10 are applied directly to said profile 8 and extend longitudinally, in the upper part of the side 3 of the drawer.

[0021] The sections of Figs. 2 and 3 show two of the preferred embodiments of the invention. In Fig. 2, the load-bearing profile 8 is of the "Z-shaped" type, and substantially forms the lower part of the side 3 of the drawer. The upper wing 8a of the profile defines an area intended to house the components of the telescopic guide; the seat 8b for the bearing 9 of the intermediate stage can be seen for example in the figure. This and other details can in any case vary according to *per* se known methods.

[0022] The upper part of the side is formed by plastic card-holding elements 10 which are inserted in a longitudinal groove 8c of the wing 8a. The card-holding element 10 is substantially formed by a panel with a flat front face 11, and a rear base 12 shaped so as to be inserted in the groove 8c of the load-bearing profile, and a plurality of spacers 13. Slots 14 and 15, respectively in the base 12 and in the spacers 13, make it possible to insert and arrange the product identification cards. The card is visible through openings 16, between two adjacent spacers 13.

[0023] The structure of one of the card-holders 10, according to this embodiment, is further illustrated in Figs. 4 and 5. The spacing between the spacers 13 is substantially equal to the standard width of the product cards; a card for example (Fig. 5) can be arranged with the side edges held by the slots 14a and 14b of the two spacers 13a, 13b, whereas the lower edge of the card is inserted in the underlying slot 15. Preferably, the card-holding element 10 is entirely made from transparent plastic. This embodiment is therefore preferably used for a drawer of the type with a "transparent side". The card-holding element 10 can be made in one or more standard lengths, by using only one, or more elements 10 put close to one another, so as to form the side of the drawer, according to the depth. The element of Fig. 4, for example, has a length such as to house six cards.

[0024] One alternative embodiment is shown in Fig. 3. The profile 8 comprises an upper part 8d, which extends above the wing 8a and substantially forms the upper part of the side 3. It has a substantially flat portion 8e, facing outwards, which acts as a rear pocket for the cards. The card-holding element is represented here by one or more panels made from plastic indicated with reference numeral 20, which can be inserted in side grooves 8f, 8g which define the portion 8e. The space for housing the cards is represented by the gap 21 that is defined between the load-bearing profile 8, more specifically the portion 8e, and the panel made from plastic 20.

[0025] Said panel 20 is illustrated with greater detail in Figs. 6 and 7. The front face 22 (Fig. 6) is substantially flat, with a plurality of openings 23 in the upper part so as to make the cards visible. At the rear, the panel 20 has a continuous indentation 24, with one end configured

so as to engage the groove 8f, for example with an "L" shape like in the figures, and a series of tabs 25 configured so as to engage the groove 8g. The cards can be inserted in the spaces 21 through slots 26 of the indentation 24. The distance between the tabs 25 is equal to the width of the cards, as already described for the spacers 13.

[0026] Even the card-holding elements 20 can be made in a modular manner, i.e. in standard lengths so as to put one or more card-holding elements side by side and thus cover the entire depth dimension of the side 3.

[0027] One example of use is shown in Fig. 8, with reference to the embodiment of Figs. 2, 4 and 5. The insertion of a product card 30 is shown in seats of the card-holder 10, in this case the slots 14 and 15. The use of the version of Figs. 3, 6 and 7 is analogous.

[0028] The detailed description makes the advantages even clearer: practical use thanks to the card-holder 10 or 20 integrated in the sides 3 of the drawers; manufacturing cost-effectiveness thanks to the shape of the card-holder 10 or 20, which is not difficult to mould; modularity of the card-holders with advantages when making drawers having different depths; possibility of personalising even by using coloured plastic.

Claims

1. Extractable drawer (1), in particular for pharmacy furniture, in which the side (3) of the drawer comprises a load-bearing profile (8), **characterised in that** at least a part of the upper face of the side (3) is formed from a card-holding element (10, 20) applied directly to said load-bearing profile (8), comprising a plurality of seats for product identification cards (30).

2. Drawer according to claim 1, wherein said card-holding element comprises slots (14, 15; 26) for the insertion of a predetermined number of said cards (30).

3. Drawer according to claim 1 or 2, wherein said load-bearing profile (8) forms substantially a lower part of the side (3), and said card-holding element (10) forms the upper part of the side itself.

4. Drawer according to claim 3, wherein the load-bearing profile has an upper wing (8a) comprising a longitudinal groove (8c), and said card-holding element (10) comprises a substantially flat panel portion (11), with a base (12) configured to engage said groove (8c).

5. Drawer according to claim 4, wherein said card-holding element (10) comprises a rear face formed with a plurality of spacer tabs (13) that define seats for the cards (30); the base (12) and said spacer tabs (13) having respective pluralities of slots (14, 15) suitable for the insertion of said cards.

6. Drawer according to claim 1 or 2, wherein said load-bearing profile (8) extends for the entire height and comprises a portion (8d) that forms the upper part of the side (3) of the drawer, and the card-holding element is represented by a panel (20) applied to said upper portion (8d) of the load-bearing profile.

7. Drawer according to claim 6, wherein the upper part (8d) of the load-bearing profile comprises a substantially flat portion (8e), facing outwards, and said card-holding element (20) can be inserted in a first and in a second longitudinal groove (8f, 8g) of the upper part of the profile, which define said flat portion, the card-holding element staying spaced from the load-bearing profile obtaining a space (21) for receiving the cards (30) between said flat portion (8e) of the profile and the card-holding element (20) itself.

8. Drawer according to claim 7, wherein the card-holding element (20) at the rear has a continuous indentation (24), with an end configured to engage said first groove (8f) and equipped with slots (26) for the insertion of cards (30), and a series of tabs (25) configured to engage said second groove (8g).

9. Drawer according to any one of the previous claims, wherein the side (3) comprises a plurality of said card-holding elements (10, 20) put close to one another.

10. Drawer according to any one of the previous claims, the load-bearing profile (8) being made of metal and the card-holding element (10, 20) being made of plastic.

11. Drawer according to claim 10, the card-holding element (10, 20) being made of transparent or coloured plastic.

12. Card-holding element (10, 20) for an extractable drawer, particularly for pharmacy furniture, the card-holding element being able to be associated through a grooved coupling with a load-bearing profile (8) of the side of the drawer, and said card-holding element comprising slots (14, 15; 26) for the insertion of a predetermined number of product identification cards (30).

13. Pharmacy furniture, comprising one or more drawers with card-holder (10, 20) integrated in the side (3), according to any one of claims 1 to 11.

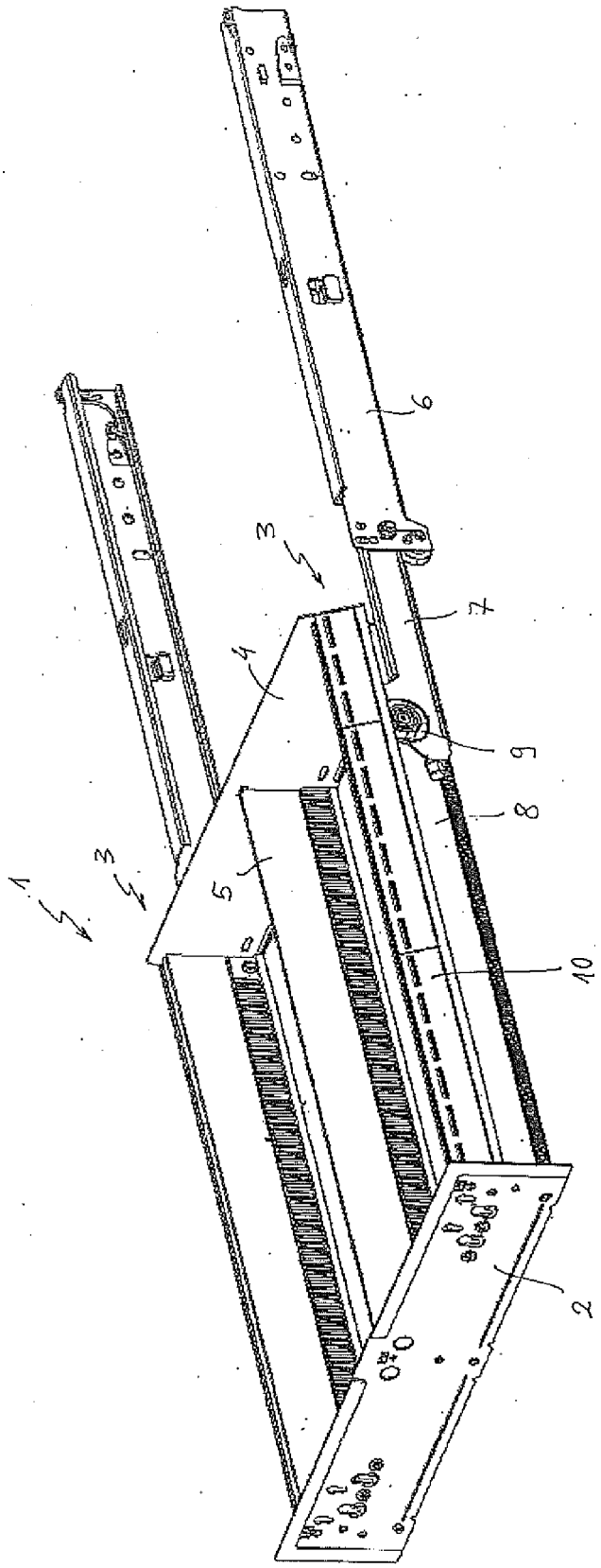

FIG. 1

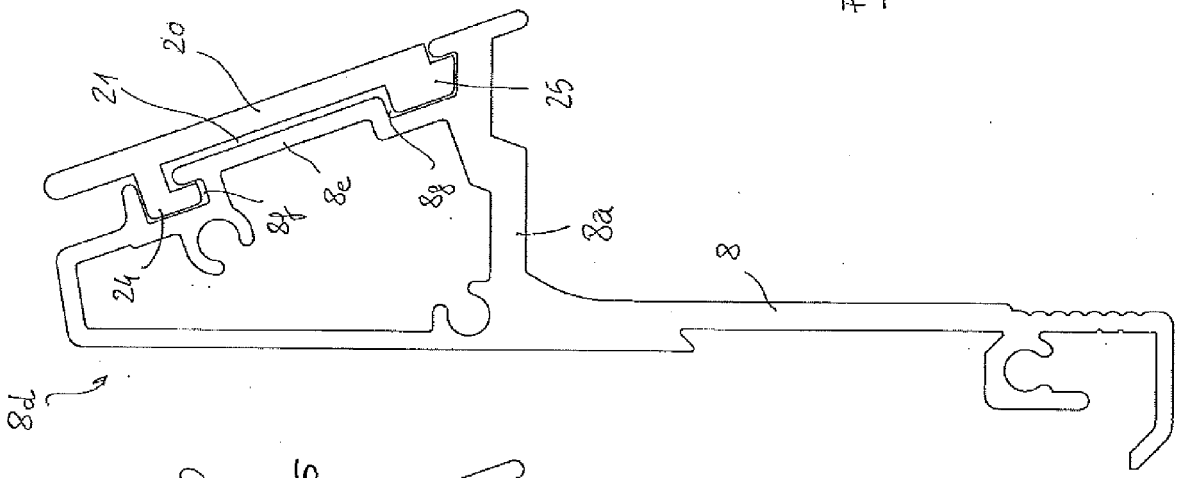

FIG. 3

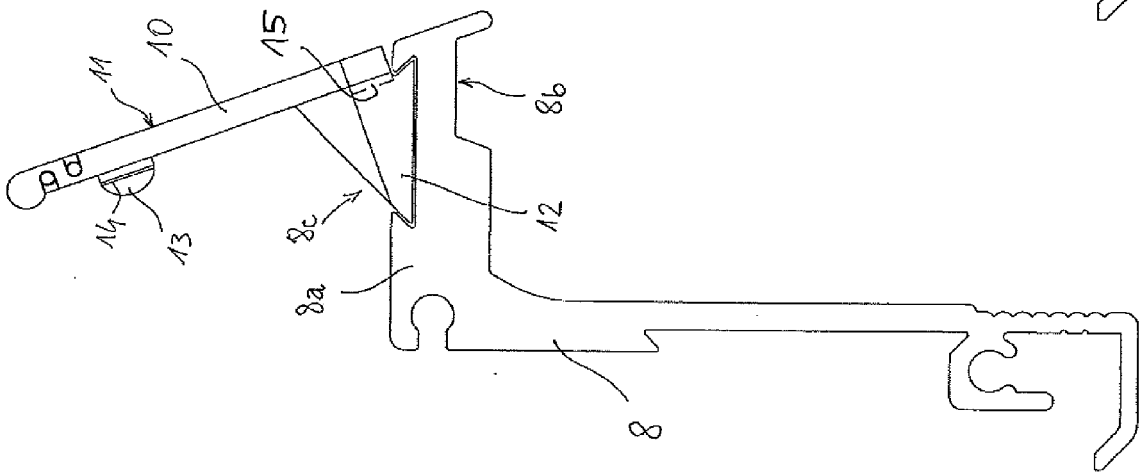

FIG. 2

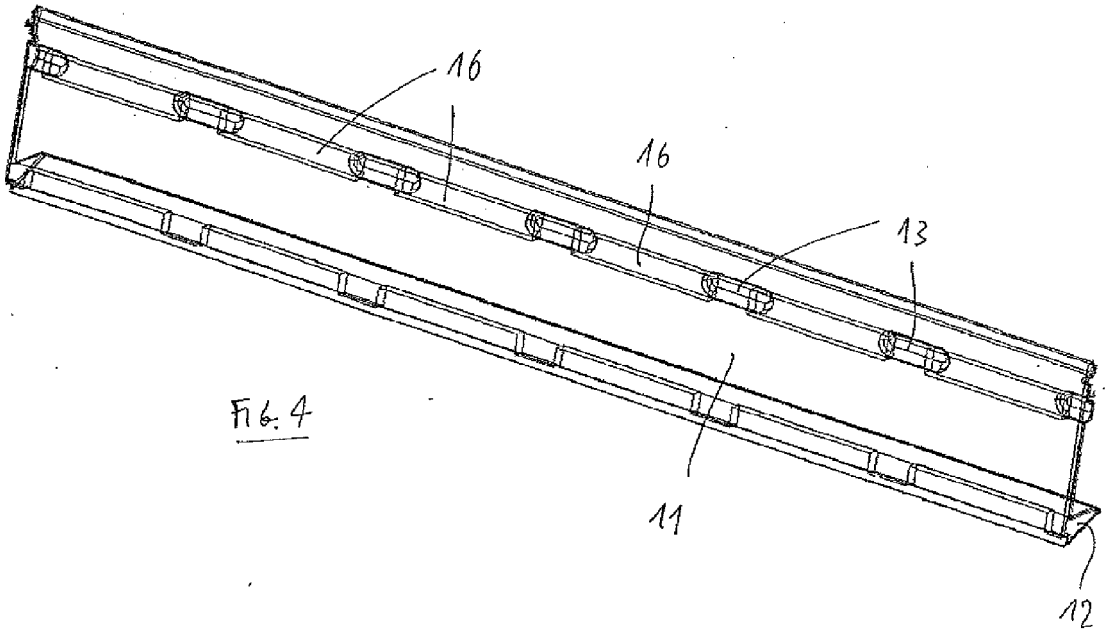

Fig. 4

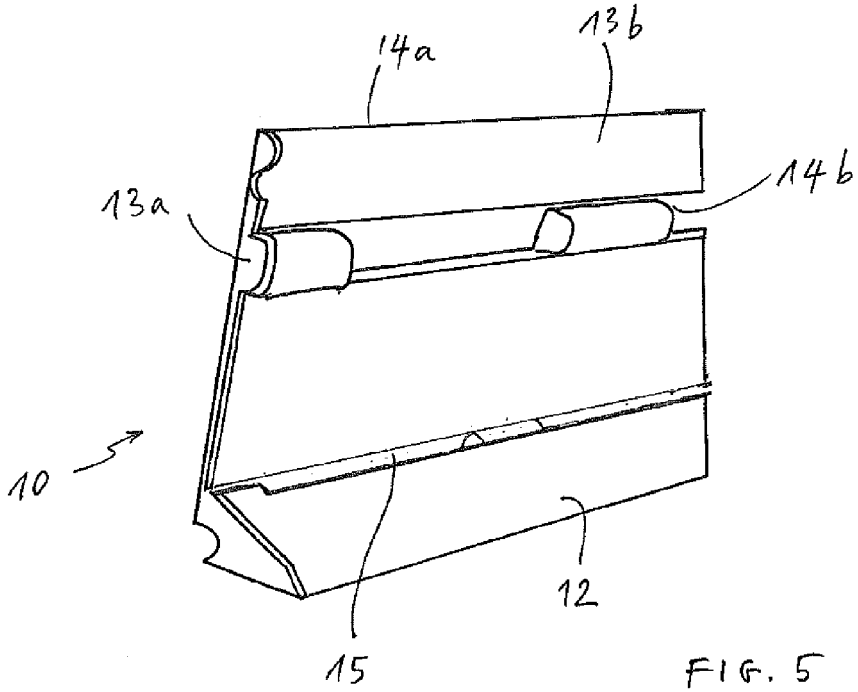

FIG. 5

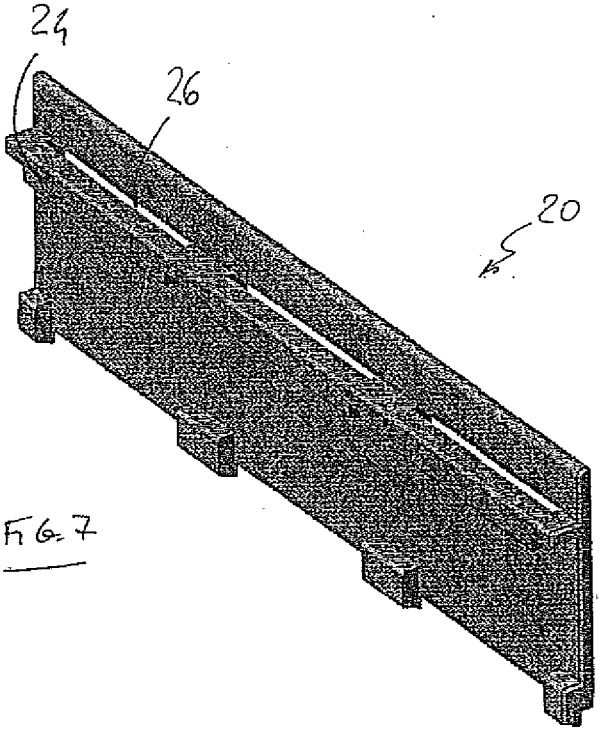

FIG. 7

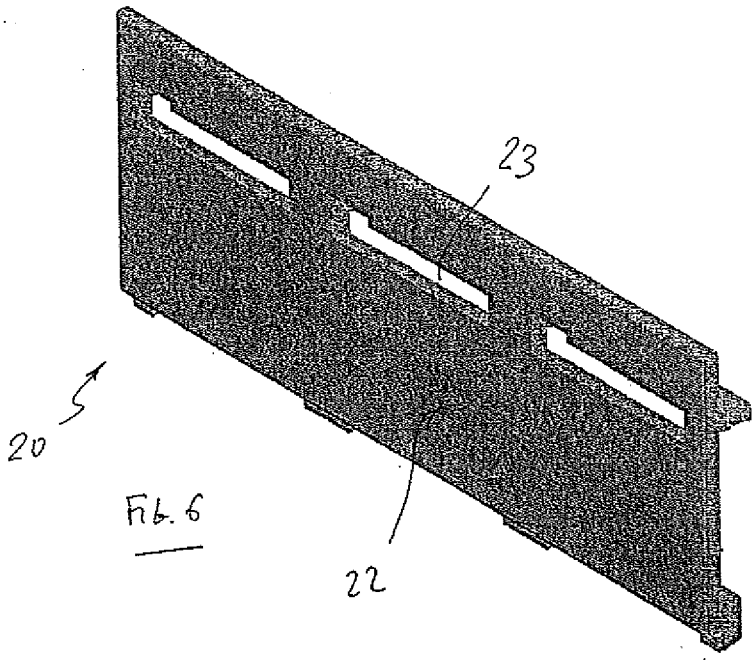

FIG. 6

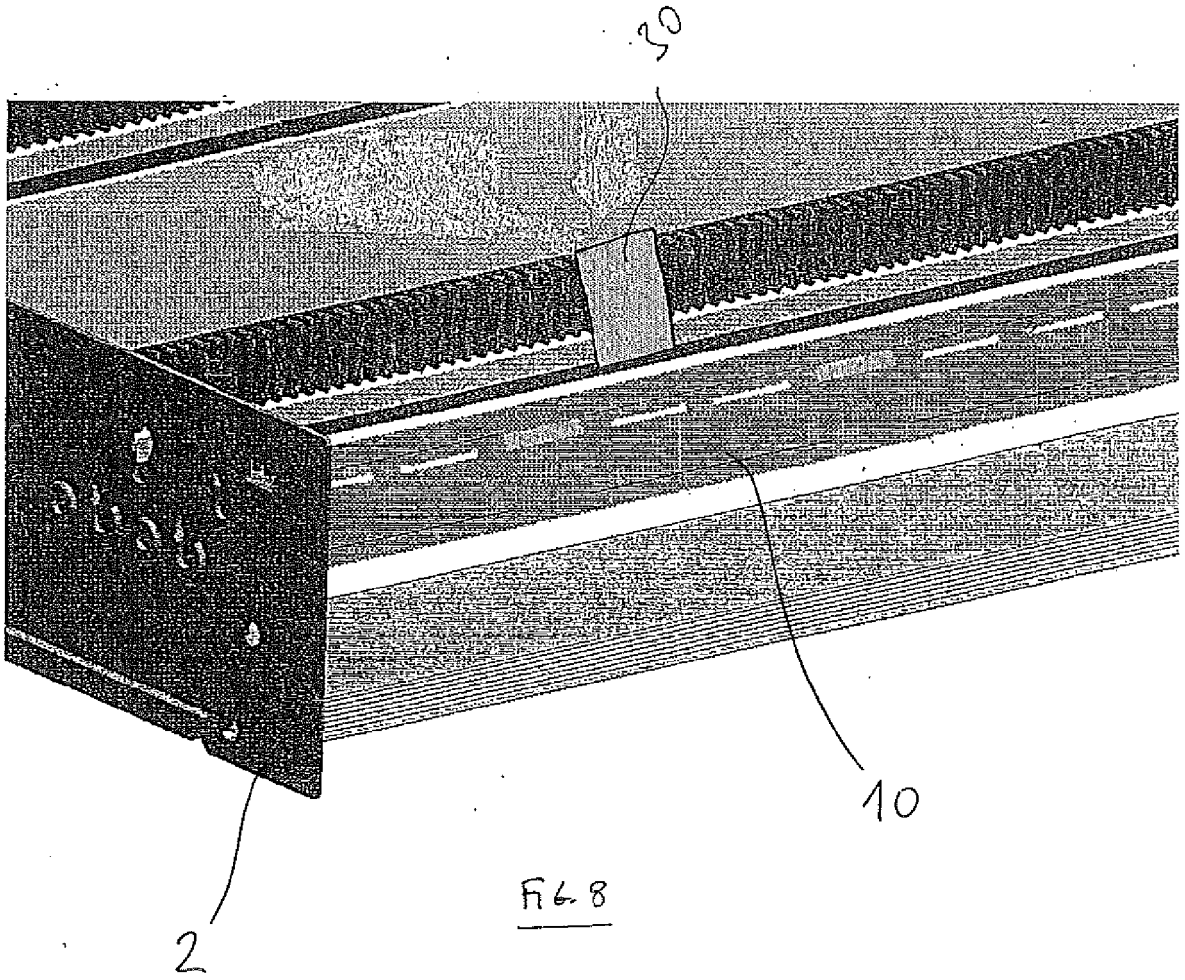

Fig. 8

Europäisches Patentamt
European Patent Office
Office européen des brevets

EUROPEAN SEARCH REPORT

Application Number
EP 11 15 3228

DOCUMENTS CONSIDERED TO BE RELEVANT

Category	Citation of document with indication, where appropriate, of relevant passages	Relevant to claim	CLASSIFICATION OF THE APPLICATION (IPC)
X	BE 674 581 A (SCHERER MATTHIAS) 15 April 1966 (1966-04-15) * page 4 - page 5 * -----	1-4,6,9, 10,12,13	INV. A47B88/20
X	EP 0 083 563 A1 (HROVAT HEIMO) 13 July 1983 (1983-07-13) * abstract * * figures 1-8 * -----	1-3,9, 10,13	
X	DE 22 49 574 A1 (RINGELHAN & RENNETT FA) 25 April 1974 (1974-04-25) * page 3 - page 5 * * figures 1,2 * -----	1-3, 9-11,13	
A	FR 2 364 636 A1 (HROVAT HORST [AT]) 14 April 1978 (1978-04-14) * abstract; figures * -----	1-13	

TECHNICAL FIELDS SEARCHED (IPC)

A47B

The present search report has been drawn up for all claims

1

Place of search	Date of completion of the search	Examiner
Munich	28 April 2011	MacCormick, Duncan

CATEGORY OF CITED DOCUMENTS

X : particularly relevant if taken alone
Y : particularly relevant if combined with another document of the same category
A : technological background
O : non-written disclosure
P : intermediate document

T : theory or principle underlying the invention
E : earlier patent document, but published on, or after the filing date
D : document cited in the application
L : document cited for other reasons
.....
& : member of the same patent family, corresponding document

EPO FORM 1503 03.82 (P04C01)

ANNEX TO THE EUROPEAN SEARCH REPORT ON EUROPEAN PATENT APPLICATION NO. EP 11 15 3228

This annex lists the patent family members relating to the patent documents cited in the above-mentioned European search report.
The members are as contained in the European Patent Office EDP file on
The European Patent Office is in no way liable for these particulars which are merely given for the purpose of information.

28-04-2011

Patent document cited in search report		Publication date	Patent family member(s)			Publication date
BE 674581	A	15-04-1966	NL	6516224	A	22-11-1966
EP 0083563	A1	13-07-1983	DE	3200142	A1	14-07-1983
DE 2249574	A1	25-04-1974	NONE			
FR 2364636	A1	14-04-1978	AT	356316	B	25-04-1980
			AU	519523	B2	10-12-1981
			AU	2883377	A	22-03-1979
			BE	858843	A1	16-01-1978
			CA	1119228	A1	02-03-1982
			CH	624285	A5	31-07-1981
			DE	2739891	A1	30-03-1978
			DE	2760376	A1	30-03-1978
			DE	7727438	U1	03-08-1978
			DK	405177	A	18-03-1978
			GB	1591115	A	17-06-1981
			IT	1085269	B	28-05-1985
			JP	53040385	A	12-04-1978
			NL	7710228	A	21-03-1978
			NO	773151	A	20-03-1978
			SE	446589	B	29-09-1986
			SE	7710416	A	18-03-1978

EPO FORM P0459

For more details about this annex : see Official Journal of the European Patent Office, No. 12/82