(19) Europäisches Patentamt
European Patent Office
Office européen des brevets

(11) EP 2 390 590 B1

(12) **EUROPEAN PATENT SPECIFICATION**

(45) Date of publication and mention of the grant of the patent:
22.03.2017 Bulletin 2017/12

(51) Int Cl.:
F24F 1/00 *(2011.01)* ***F04D 25/08*** *(2006.01)*
F24F 13/24 *(2006.01)*

(21) Application number: **11177128.3**

(22) Date of filing: **03.02.2006**

(54) **Ceiling-embedded-type air conditioning apparatus**

In die Decke eingebaute Klimaanlagenvorrichtung

Climatiseur d'air encastré dans le plafond

(84) Designated Contracting States:
AT BE BG CH CY CZ DE DK EE ES FI FR GB GR HU IE IS IT LI LT LU LV MC NL PL PT RO SE SI SK TR

(30) Priority: **24.02.2005 JP 2005049354**
18.11.2005 JP 2005334856

(43) Date of publication of application:
30.11.2011 Bulletin 2011/48

(62) Document number(s) of the earlier application(s) in accordance with Art. 76 EPC:
10009996.9 / 2 273 207
06712972.6 / 1 873 461

(73) Proprietor: **Mitsubishi Electric Corporation**
Chiyoda-ku
Tokyo 100-8310 (JP)

(72) Inventors:
- **Ikeda, Takashi**
  Chiyoda-ku, Tokyo 100-8310 (JP)
- **Edayoshi, Atsushi**
  Chiyoda-ku, Tokyo 100-8310 (JP)
- **Suzuki, Kazutaka**
  Chiyoda-ku, Tokyo 100-8310 (JP)

(74) Representative: **Nicholls, Michael John**
J A Kemp
14 South Square
Gray's Inn
London WC1R 5JJ (GB)

(56) References cited:
JP-A- 06 341 659 **JP-A- 11 101 194**
US-A1- 2004 244 403

Note: Within nine months of the publication of the mention of the grant of the European patent in the European Patent Bulletin, any person may give notice to the European Patent Office of opposition to that patent, in accordance with the Implementing Regulations. Notice of opposition shall not be deemed to have been filed until the opposition fee has been paid. (Art. 99(1) European Patent Convention).

Printed by Jouve, 75001 PARIS (FR)

Description

Technical Field

[0001] The present invention relates to a ceiling-embedded-type air conditioning apparatus, and, more specifically, relates to an apparatus structure for motor cooling ability improvement and noise reduction.

Background Art

[0002] A known ceiling-embedded-type air conditioning apparatus includes a turbo fan having a ceiling-embedded-type air conditioning apparatus body having a chassis top panel, a motor disposed inside the ceiling-embedded-type air conditioning apparatus body in a manner such that the rotary shaft is arranged at right angle to the chassis top panel, a downward-protruding hub covering the motor and fixing the rotary shaft of the motor, a main plate extending from the periphery of an upper opening surface of the hub opposite to the top panel and having a plurality of blades attached to one surface of the main plate opposite to the other surface opposing the top panel, and a shroud opposing the main plate and forming a guiding channel for the blades, a motor-side air passage defined by the hub, the main plate and the shroud and provided on the motor side of the hub, a fan inner air passage provided opposite to the motor-side air passage, and a turbo fan to blow out air taken in from the shroud side through the fan inner air passage (Related Art 1). In this ceiling-embedded-type air conditioning apparatus, part of the air blown out from the turbo fan is guided through a gap between the chassis top panel and the main plate into the motor-side air passage on the inner side of the hub to cool the motor. Then, the air used for cooling the motor is emitted from openings provided in the hub in the vicinity of the motor-side surface into the fan inner air passage at the outer side of the hub.

[0003] As another structure of a ceiling-embedded-type air conditioning apparatus, in addition to the above-described structure, the openings in the hub are positioned at the lower side of the hub (in the vicinity of fixed portion of the motor rotary shaft and the hub) instead of positioning them in the vicinity of the motor-side surface and an auxiliary fan having a plurality of blades is provided on the outer side of the hub in a manner such that the lower-side openings are covered (Related Art 2) (refer to Patent Document 1). According to this ceiling-embedded-type air conditioning apparatus, by providing the auxiliary fan, the cooling rate of the motor is improved by increasing the air volume flowing around the motor and operating noise of the motor leaking from the lower-side openings is reduced by covering the lower-side openings with the auxiliary fan.

[0004] As another structure of a ceiling-embedded-type air conditioning apparatus, in addition to the above-described Related Art 2, the openings provided in the hub are side surface openings provided in the vicinity of the side surface of the hub instead of the lower-side openings, and an auxiliary hub protruding downward substantially in line with the hub and being provided on the outer side of the hub so as to cover the side-surface openings is provided instead of the auxiliary fan (Related Art 3) (refer to Patent Document 2).

[Patent Document 1] Japanese Patent No. 3270567
[Patent Document 2] Japanese Patent No. 3275474

[0005] US2004/0244403 A1 discloses a ceiling-embedded-type air conditioning apparatus on which the precharacterizing portion of claim 1 is based.

Disclosure of the Invention

Problems to be Solved by the Invention

[0006] According to the above-described Related Art 1, air used for cooling the motor flows out from the side-surface openings of the hub into the fan inner air passage. At this time, the air is emitted from the side-surface openings to the fan inner air passage as a jet flow. Therefore, there is a problem in that the blades pass through the jet flow turbulence and undergo pressure fluctuation, causing noise to worsen. The jet flow emitted from the side-surface openings interfere with the intake flow of the turbo fan. As a result, there are problems in that the actual flow rate of the blow-off air from the turbo fan is reduced, worsening the air supply efficiency and the noise value corresponding to the air volume. Since the openings are provided in the side surface of the hub, air does not sufficiently flow to the lower edge surface of the motor. Thus, there is a possibility that the motor is not sufficiently cooled and damaged by the generated heat.

[0007] According to Related Art 2 and Related Art 3, the openings provided in the hub are covered with the auxiliary fan or the auxiliary hub. However, the auxiliary fan or the auxiliary hub do not cover the entire hub but only cover part of the hub. Therefore, similar to the above-described Related Art 1, there is a possibility in that the flow from the openings interferes with the intake flow of the turbo fan to worsen the noise.

[0008] Furthermore, there is a problem in that reliability may decrease since, when transporting the air conditioning apparatus body by a truck or the like, vibration generated during transportation causes the turbo fan to pivot so that the outer circumferential edge of the turbo fan collides with the chassis top panel of the air conditioning apparatus body by point contact and the turbo fan breaks, at worst, due to the impact of stress concentration.

[0009] The present invention is accomplished to solve the above-identified problems. A first object of the present invention is to provide a highly reliable, low-noise ceiling-embedded-type air conditioning apparatus capable of preventing damaging of the motor by improving the motor cooling efficiency.

[0010] A second object of the present invention is to provide a ceiling-embedded-type air conditioning apparatus being capable of preventing the fan from being damaged during transportation and having high product reliability.

Means for Solving the Problems

[0011] According to the present invention there is provided a ceiling-embedded-type air conditioning apparatus according to the appended claims.

[0012] .

Advantages

[0013] According to the present invention, since an air guiding cover is provided on the inner side of a hub and this air guiding cover is formed so that the height position of the lower edge openings of a circumferential surface portion is lower than the lower edge surface of the motor, the air flown into the motor-side air passage can reliably guide the air to the lower edge surface of the motor. As a result, the motor cooling efficiency is improved and damaging of the motor due to generated heat can be prevented, enabling a highly reliable ceiling-embedded-type air conditioning apparatus to be obtained.

[0014] Furthermore, since openings for emitting air into the fan inner air passage are provided in the circumferential surface portion of the hub in the vicinity of a main plate, the air flowing out from the openings into the fan inner air passage can be prevented from interfering with a fan intake air flow. Therefore, shear distortion of the fan intake flow is suppressed, and noise caused by blades passing through turbulent air can be reduced. Furthermore, an increase in noise accompanying deterioration in air supply efficiency caused by interference with the air flowing out from the openings and the fan intake flow can be prevented.

[0015] Furthermore, since the entire hub is substantially a double structure and the openings are provided on the circumferential surface portion of the hub in the vicinity of a main plate, as described above, the distance from the motor-side air passage of the hub to the fan inner air passage is extended, and the noise is damped. As a result, the leakage of motor operating noise, such as abnormal electromagnetic noise and bearing rotating noise generated at the motor, to the outside can be prevented. Furthermore, a low-noise ceiling-embedded-type air conditioning apparatus providing a comfortable environment for residents can be obtained.

[0016] Furthermore, similar to the damping of the noise, since the flow speed of the air flowing out from the openings into the fan inner air passage is also damped, a reduction in the flow rate of the fan blow-off flow can be reliably prevented, and an increase in noise accompanying the deterioration in air supply efficiency can be prevented. Furthermore, because of the effect of preventing the reduction in the flow volume of the fan blow-off air flow, a sufficient volume of air for cooling the motor can be obtained, and the motor can be effectively cooled.

[0017] In the present invention, reinforcement ribs are provided on a chassis top panel and radially disposed air guiding passages for guiding part of the blow-off air flow from the turbo fan to the motor by a top-panel-side heat-insulating material and the reinforcement ribs provided on the inner side of the chassis top panel are formed. Then, first, the strength of the chassis top panel can be increased by the reinforcement ribs so as to enable reduction in the thickness and the weight of the chassis top panel 1b and the flow of air from the radially disposed air guiding passages to the motor can be increased so as to improve the cooling efficiency. As a result, damaging of the motor can be prevented.

Brief Description of the Drawings

[0018]

[Fig. 1] Fig. 1 illustrates an external perspective view of the ceiling-embedded-type air conditioning apparatus according to a first embodiment of the present invention.

[Fig. 2] Fig. 2 illustrates a longitudinal cross-sectional view of the inside of the air conditioning apparatus shown in Fig. 1.

[Fig. 3] Fig. 3 illustrates a horizontal cross-sectional view taken along line X-X in Fig. 2 viewed from the top panel side and illustrates the inside of an air conditioning apparatus shown in Fig. 1.

[Fig. 4] Fig. 4 illustrates an enlarged cross-sectional view of a turbo fan 3 and the vicinity shown in Fig. 2.
[Fig. 5] Fig. 5 illustrates a perspective view of the turbo fan 3 (part 1).
[Fig. 6] Fig. 6 illustrates a perspective view of the turbo fan 3 (part 2).
[Fig. 7] Fig. 7 illustrates a perspective view of an air guiding cover 18.
[Fig. 8] Fig. 8 illustrates the relationship between a minimum gap spacing k between an air guiding cover 18 and a motor 4 and the motor cooling efficiency.
[Fig. 9] Fig. 9 illustrates the relationship between G4/G1 (proportion of the total opening area G4 in the circular opening area G1) and the motor cooling efficiency.
[Fig. 10] Fig. 10 illustrates the relationship between G4/G5 (proportion of the total opening area G4 in the turbo fan outlet area G5) and the noise value.
[Fig. 11] Fig. 11 illustrates the frequency characteristics of the air conditioning apparatus according to the present invention in operation.
[Fig. 12] Fig. 12 illustrates the relationship between the air supply volume and noise during operation of the air conditioning apparatus according to the present invention.
[Fig. 13] Fig. 13 illustrates a cross-sectional enlarged view of an air guiding cover 18 according to another example in the vicinity of the turbo fan 3.
[Fig. 14] Fig. 14 illustrates a longitudinal cross-sectional view of the inside of the air conditioning apparatus according to the second embodiment of the present invention.
[Fig. 15] Fig. 15 illustrates a horizontal cross-sectional view of the inside of an air conditioning apparatus body 1 shown in Fig. 14 viewed from the top panel.
[Fig. 16] Fig. 16 illustrates an enlarged view of a turbo fan 3 and its vicinity shown in Fig. 14.
[Fig. 17] Fig. 17 illustrates a schematic view of a turbo fan 3 coming in contact with a top-panel-side heat-insulating material 1e by pivoting on a supporting point at the fixed portion 3h of the hub 3c and the rotary shaft 4a functioning as during transportation.
[Fig. 18] Fig. 18 illustrates a perspective view from the portion corresponding to the fan side of the heat-insulating material 1c.
[Fig. 19] Fig. 19 illustrates the change in the noise value corresponding to E1/D1 (proportion of the minimum gap E1 between the rectifying section 1g and the main plate 3b in the gap D1 between the top-panel-side heat-insulating material 1e and the main plate 3b in the height direction) under the condition that the air supply volumes are the same.
[Fig. 20] Fig. 20 illustrates a perspective view of another example of the rectifying section 1g having a different shape.
[Fig. 21] Fig. 21 illustrates a longitudinal cross-sectional view of another example of the rectifying section 1g having a different shape.
[Fig. 22] Fig. 22 illustrates a longitudinal cross-sectional view of the inside of the ceiling-embedded-type air conditioning apparatus according to the third embodiment of the present invention.
[Fig. 23] Fig. 23 illustrates a perspective view of a rectifying plate 19 including a side surface 1h shaped as an inclined surface of a polygon.
[Fig. 24] Fig. 24 illustrates a perspective view of a rectifying plate 19 including a side surface 1h shaped as an inclined surface of a truncated cone.
[Fig. 25] Fig. 25 illustrates a longitudinal cross-sectional view of the inside of the ceiling-embedded-type air conditioning apparatus according to the fourth embodiment of the present invention.
[Fig. 26] Fig. 26 illustrates a horizontal cross-sectional view taken along line Z-Z in Fig. 25.
[Fig. 27] Fig. 27 illustrates the exterior of a top panel viewed from an arrow S in Fig. 25.
[Fig. 28] Fig. 28 illustrates a partially enlarged view of the turbo fan 3 and its vicinity illustrated in Fig. 25.
[Fig. 29] Fig. 29 illustrates a cross-sectional perspective view taken along line V-V in Fig. 26.
[Fig. 30] Fig. 30 illustrates a partial cross-sectional side view of a motor 4.
[Fig. 31] Fig. 31 illustrates a schematic view of a driving substrate built-in the motor 4.
[Fig. 32] Fig. 32 illustrates the measurement experiment results of the motor surface temperature and the noise value corresponding to the positional relationship between radially positioned air guiding passages 1k and a turbo fan 3 shown in Fig. 25.
[Fig. 33] Fig. 33 illustrates the chassis top panel 1b of a ceiling-embedded-type air conditioning apparatus according to a fifth embodiment viewed from the side of a top-panel-side heat-insulating material 1 eb.
[Fig. 34] Fig. 34 illustrates a plan view of the exterior of the chassis top panel 1b of a ceiling-embedded-type air conditioning apparatus according to a fifth embodiment.
[Fig. 35] Fig. 35 illustrates a cross-sectional perspective view taken along line V-V in Fig. 33.

Best Mode for Carrying Out the Invention

First Embodiment

[0019] A ceiling-embedded-type air conditioning apparatus according to a first embodiment of the present invention will be described below with reference to Figs. 1 to 7.

[0020] Fig. 1 illustrates an external perspective view of the air conditioning apparatus according to the present invention. Fig. 2 illustrates a longitudinal cross-sectional view of the inside of the air conditioning apparatus shown in Fig. 1. Fig. 3 illustrates a horizontal cross-sectional view taken along line X-X in Fig. 2 viewed from the top panel side and illustrates the inside of the air conditioning apparatus body 1 shown in Fig. 1. Fig. 4 illustrates an enlarged cross-sectional view of a turbo fan 3 and its vicinity shown in Fig. 2. Fig. 5 illustrates a perspective view of the turbo fan 3 mounted on the ceiling-embedded-type air conditioning apparatus body 1 according the present invention. Fig. 6 illustrates a perspective view of the turbo fan 3 shown in Fig. 5 shown upside-down. Fig. 7 illustrates a perspective view of an air guiding cover 18 disposed on the turbo fan 3.

[0021] In Fig. 1, the air conditioning apparatus body 1 is embedded in the ceiling of a room 15 in a manner such that a substantially square decorative panel 2 provided at the lower portion of the air conditioning apparatus body 1 can be seen. The ceiling-embedded-type air conditioning apparatus includes substantially square suction grills 2a communicating with an air inlet 11a (refer to Fig. 2) for sucking air into the air conditioning apparatus body 1, and panel outlets 2b communicating with a body outlet 16a (refer to Fig. 2) aligned with the sides of the decorative panel 2, both provided in the central area of the decorative panel 2, and further includes air flow direction vanes 2c provided in the panel outlets 2b.

[0022] As shown in Figs. 2 and 3, the chassis of the air conditioning apparatus body 1 is constituted of chassis side panels 1a and a chassis top panel 1b attached to the area surrounded by the chassis side panels 1 a. The chassis side panels 1a and the chassis top panel 1b are composed of sheet metal members. A heat-insulating material 1c is attached to at least part of the surfaces of the chassis side panels 1a and the chassis top panel 1 b, on the inner side of the air conditioning apparatus body 1, so as to form the sidewalls of an air passage. Inside the air conditioning apparatus body 1, a motor 4 disposed in a manner such that its rotary shaft 4a is arranged at right angles to the chassis top panel 1 b, a centrifugal air blower including the turbo fan 3 rotationally driven by the motor 4, and a substantially C-shaped heat exchanger 6 disposed vertically so as to surround the turbo fan 3 are provided.

[0023] Below the heat exchanger 6, a drain pan 12 composed of foamed material and an electric component box 13 accommodating electronic components, such as a control substrate, are disposed. Two end portions 6a of the substantially C-shaped heat exchanger 6 are connected with a heat exchanger connecting plate 7 in a manner such that the heat exchanger 6 and the heat exchanger connecting plate 7, as a whole, form a substantially square shape. On the outer side (chassis side panel 1a side) of the heat exchanger connecting plate 7, as shown in Fig. 3, a gap is provided between the heat exchanger connecting plate 7 and a side panel-side heat-insulating material 1d. A piping accommodating space 10 is formed by covering the upper end and the lower end of the gap with the chassis top panel 1b and the drain pan 12, respectively. Inside the piping accommodating space 10, a header 8 connected to a heat exchanger tube 6b extending from one of the end portions 6a and a distributor 9 are disposed.

[0024] The centrifugal air blower includes the turbo fan 3 and a bellmouth 5 constituting an intake air passage 23a to the turbo fan 3. The turbo fan 3 includes a downward-protruding hub 3c covering the motor 4 and fixing the rotary shaft 4a of the motor 4 in place, a substantially ring-shaped main plate 3b extending from the periphery of the upper opening of the hub 3c so as to oppose the chassis top panel 1b and including a plurality of blades 3a attached to the surface opposite to the surface opposing the chassis top panel 1 b, a shroud 3g opposing the main plate 3b and constituting a guiding channel to the blades 3a. The upper edge of the hub 3c is formed as a single unit with the main plate 3b, and the lower edge of the hub 3c is fixed to the rotary shaft 4a of the motor 4. Here, the hub 3c is constituted as a single unit integrating a hollow cone-shaped circumferential surface portion 3ca whose diameter decreases from the inner circumferential surface portion of the main plate 3b to the lower portion of the circumferential surface portion 3ca, a flat surface portion 3cb extending from the lower edge opening of the circumferential surface portion 3ca to the rotary shaft 4a, and a cylindrical portion 3cc extending from the inner circumference of the flat surface portion 3cb to the motor shaft 4a. In the circumferential surface portion 3ca, a plurality of openings 3d is formed along a concentric circle in the vicinity of the main plate 3b. The hub 3c having the above-described structure is fixed to the motor shaft 4a with the cylindrical portion 3cc. The dimensions of the hub 3c are designed so that, in this fixed position, a gap E1 between the main plate 3b formed as a single unit with the hub 3c and a top-panel-side heat-insulating material 1e has a predetermined interval.

[0025] On the inner side (motor 4 side) of the hub 3c of the turbo fan 3, an air guiding cover 18 is provided. A motor-side air passage 3f is formed between the air guiding cover 18 and the motor 4. The air guiding cover 18 guides air, flowing from the gap E1 formed between the chassis top panel 1b and the main plate 3b into the motor-side air passage f, to the motor 4. As shown in Fig. 7, the air guiding cover 18 includes a ring-shaped flange portion 18a and a hollow cone-shaped circumferential surface portion 18c whose diameter decreases so that the cross-sectional area of the motor-side air passage 3f decreases from the inner circumferential surface portion of the flange portion 18a to the lower

edge of an opening 18b. The circumferential surface portion 18c is provided at substantially the same angle as the circumferential surface portion 3ca of the hub 3c and in a manner such that a gap E2 between the circumferential surface portion 18c and the circumferential surface portion 3ca has a predetermined interval. The air guiding cover 18 is formed so that the height of the lower edge opening 18b of the circumferential surface portion 18c is lower than a lower edge surface 4b of the motor 4. The air guiding cover 18 guides air flowing into the motor-side air passage 3f to the entire motor 4. The air guiding cover 18 having the above-described structure is composed of metal members, such as aluminum and plated steel plates, having high heat conductivity. The air guiding cover 18 is fixed to the main plate 3b by the flange portion 18a in a suspended position by melting and rotates together with the turbo fan 3 by the rotation of the motor 4.

[0026] Next, operation of the ceiling-embedded-type air conditioning apparatus having the above-described structure will be described below.

[0027] During operation of the air conditioning apparatus, the motor 4 is driven and the turbo fan 3 rotates in the direction indicated by an arrow A (refer to Figs. 3, 5, and 6). Then, air in the room 15 is taken in from the intake grills 2a as indicated by an arrow B. After dust is removed at a filter 14, the air is taken into the turbo fan 3 through the bellmouth 5. Subsequently, blow-off air C1 from an outlet 3i of the turbo fan 3 is heated or cooled as it passes through the heat exchanger 6. Then, air conditioning is carried out by blowing out the air C1 from the panel outlet 2b into the room 15 while controlling the flow direction of the air with the air flow direction vane 2c rotated by a vane motor, not shown in the drawings. In cooling operation, condensed water generated by condensing air in the room 15 at the heat exchanger 6 is drained outside the air conditioning apparatus body 1 by a drain pump 17.

[0028] As shown in Fig. 4 illustrating the enlarged view of the turbo fan 3 and its vicinity, the flow B taken into the turbo fan 3 splits into an air flow C1 flowing from the turbo fan 3 to the heat exchanger 6 and a flow C2 flowing through the gap E1 between the main plate 3b and the top-panel-side heat-insulating material 1e, flowing into the motor-side air passage 3f around the motor 4, flowing through the lower edge opening 18b of the air guiding cover 18, flowing through the gap E2 between the hub 3c and the air guiding cover 18, emitted from the openings 3d to the fan inner air passage 3e, and joining the fan intake air flow B.

[0029] In this flow C2, first, the air flowing into the motor-side air passage 3f (side of the motor 4) of the inner side of the air guiding cover 18 through the gap E1 generates an air flow directed to the lower edge opening 18b. Here, since the air guiding cover 18 is formed so that the height of the lower edge opening 18b of the circumferential surface portion 18c is lower than the lower edge surface of the motor 4, the air flowing into the motor-side air passage 3f can be reliably guided to the lower edge surface 4b of the motor 4. In this way, the entire surface of the motor 4 can be cooled, and the heat of the coils and the elements inside the motor 4 can be radiated.

[0030] Then, the air used to cool the motor 4 surface flows out from the lower edge opening 18b of the air guiding cover 18 and comes in contact with the flat surface portion 3cb of the hub 3c. Subsequently, the air is guided upward through the gap E2 and is emitted from the openings 3d to the fan inner air passage 3e. Here, since the openings 3d are formed in the circumferential surface portion 3ca of the hub 3c on the main plate 3b side (in the vicinity of the main plate 3b), the air flowing out from the openings 3d to the fan inner air passage 3e can be prevented from interfering with the fan intake air flow B. Therefore, shearing distortion of the fan inlet flow B can be suppressed, and noise caused by the blades 3a passing through turbulent air can be reduced. Furthermore, increase in noise caused by deterioration of the air supply efficiency caused by the air interfering with the air with the fan intake air flow B can be prevented.

[0031] Since the entire hub 3c is substantially in a double structure and the openings 3d are provided on the main plate 3b side of the circumferential surface portion 3ca of the hub 3c, the length of the air passage from the motor-side air passage 3f of the hub 3c to the fan inner air passage 3e is greater than that in the case where the hub is in a single structure and the openings for emitting air from the inner side of the hub to the outside is provided in the vicinity of the side surface of the motor or where part of the hub is in a double structure and the position of the openings are low. Therefore, noise is damped, and operational noise, such as abnormal electromagnetic noise or bearing rotating noise generated at the motor 4, is reduced.

[0032] Similar to the damping of noise, the flow speed of the air flowing out from the openings 3d to the fan inner air passage 3e is also damped. Accordingly, reduction in the flow rate of the fan blow-off air flow C1 caused by the air flowing out from the openings 3d into the fan inner air passage 3e and interfering with the fan intake air flow B can be reliably prevented, and an increase in noise accompanying degradation of air supply efficiency can be prevented. Furthermore, due to the effect of preventing a reduction in the fan blow-off air flow C1, an air volume sufficient for cooling the motor can be obtained and the motor 4 can be efficiently cooled.

[0033] Next, the dimensional design of each component of the turbo fan 3 for sufficiently obtaining cooling effect of a motor 4 and a noise reduction effect will be described with reference to Figs. 8 to 12. Relevant dimensions include the minimum gap spacing k between the air guiding cover 18 and the motor 4 lower edge (the distance between the lower edge of the motor 4 and the surface of the circumferential surface portion 18c along a perpendicular line extended from the lower edge of the motor 4 to the surface of the circumferential surface portion 18c of the air guiding cover 18), an area G5 of the outlet 3i of the turbo fan 3, a circular opening area G1 at the gap E2 between the air guiding cover 18 and the hub 3c (i.e., the opening area obtained by taking a circular cross-section of the air guiding cover 18 and the hub

3c along a plane orthogonal to the circumferential surface portion 3ca), and an total opening area G4 of the openings 3d (total area of all of the openings 3d).

[0034] Fig. 8 illustrates the relationship between the minimum gap spacing k between the air guiding cover 18 and the motor 4 lower edge and the motor cooling efficiency. The motor cooling efficiency is represented by the proportion of (h1-h2) in h1, where h1 represents the motor temperature when the openings 3d are provided and h2 represents the motor temperature when the openings 3d are not provided.

[0035] As shown in Fig. 8, it is preferable to set the minimum gap spacing k to 8 mm or more so that the air guiding cover 18 does not collide with the motor 4 when horizontally pivoted on a supporting point at the rotary shaft 4a during transportation, and 25 mm or less so that steep deterioration of the motor cooling efficiency does not occur. By employing these dimensions, sufficient air flows on the motor surface so that stable motor cooling efficiency can be achieved and damage caused by heat generated at the motor can be prevented.

[0036] Fig. 9 illustrates the relationship between G4/G1 (the proportion of the total opening area G4 in the circular opening area G1) and the motor cooling efficiency.

[0037] As shown in Fig. 9, if G4/G1 is 40% or more, the flow resistance at the passage from the gap E2 between the air guiding cover 18 and the hub 3c to the openings 3d of the hub 3c is not too great, and minimum air flows so that stable, high motor cooling efficiency is achieved and damage caused by heat generated at the motor 4 can be prevented.

[0038] Fig. 10(a) illustrates the relationship between G4/G5 (the proportion of the total opening area G4 in the turbo fan outlet area G5) and noise values. Fig. 10(b) illustrates the relationship between G4/G5 (the proportion of the total opening area G4 in the turbo fan outlet area G5) and the motor cooling efficiency.

[0039] As shown in Fig. 10(a), if G4/G5 is 10% or less, the air flow emitted from the openings 3d does not interfere with the fan intake air flow B and, thus, the noise value is small. As shown in to Fig. 10(b), if G4/G5 is 0.5% or more, stable motor cooling efficiency is obtained. In this way, by setting G4/G5 between 0.5% and 10%, stable motor cooling efficiency can be achieved with low noise.

[0040] As described above, by setting the dimensions so that the relationships between each of the components (air guiding cover 18 and motor 4, air guiding cover 18 and hub 3c, and openings 3d and outlet 3i) are maintained, damage caused by heat generated at the motor 4 can be prevented with low noise and a quiet, high quality ceiling-embedded-type air conditioning apparatus body can be obtained.

[0041] Fig. 11 illustrates the frequency characteristics of the air conditioning apparatus according to the present invention in operation and illustrates the comparative results to a known air conditioning apparatus. The horizontal axis represents frequency, and the longitudinal axis represents the noise value SPL. The experimental result shows a comparison of the structure according to the present invention and a known structure (a single structure hub having openings formed in the vicinity of the motor side surface of the hub, for emitting the air inside the hub to outside of the hub). As shown in Fig. 11, it can be confirmed that abnormal electromagnetic noise or bearing rotating noise generated at the motor 4 can be reduced.

[0042] Fig. 12 illustrates the relationship between the air supply volume and noise during operation of the air conditioning apparatus according to the present invention and illustrates the comparative result with that of a known air conditioning apparatus. The horizontal axis represents the air supply volume, and the longitudinal axis represents the noise value.

[0043] As shown in Fig. 12, it can be confirmed that, when the air supply volumes are the same, noise is reduced more for the structure according to the present invention compared with the known structure (a single structure hub having openings formed in the vicinity of the motor side surface of the hub, for emitting the air inside the hub to outside the hub).

[0044] In this way, according to the first embodiment of the present invention, since the air guiding cover 18 is provided on the inner side (motor 4 side) of the hub 3c and this air guiding cover 18 is formed so that the height of the lower edge opening 18b of the circumferential surface portion 18c is lower than the lower edge surface 4b of the motor 4, air flown into the motor-side air passage 3f can be reliably guided to the lower edge surface 4b of the motor 4. In this way, the entire surface of the motor 4 can be cooled, and the heat of the coils and the elements inside the motor 4 can be radiated. As a result, the motor cooling efficiency is improved and damage of the motor caused by heat generation can be prevented, and a highly reliable ceiling-embedded-type air conditioning apparatus can be obtained.

[0045] Since the openings 3d for emitting air to the fan inner air passage 3e are provided on the main plate 3b side of the circumferential surface portion 3ca of the hub 3c, the air emitted from the openings 3d to the fan inner air passage can be prevented from interfering with the fan intake air flow B. Therefore, shearing distortion of the fan intake air flow B can be suppressed, and noise caused by the blades 3a passing through turbulent air can be reduced. Furthermore, an increase in noise accompanying deterioration in air supply efficiency caused by interference of the emitted air with the air flowing out from the openings and the fan intake air flow B can be prevented.

[0046] Since the hub 3c is substantially a double structure as a whole and the openings 3d are provided on the main plate 3b side of the circumferential surface portion 3ca of the hub 3c, as described above, the distance from the motor-side air passage 3f of the hub 3c to the fan inner air passage 3e is extended, and noise is damped. As a result, compared with that of a hub having a single structure or a partially double structure leakage of motor operating noise, such as

abnormal electromagnetic noise or bearing rotating noise generated the motor 4, to the outside can be reduced. As a result, a low-noise ceiling-embedded-type air conditioning apparatus providing a comfortable environment for residents can be provided.

[0047] Similar to the damping of noise, the flow speed of the air flowing out from the openings 3d into the fan inner air passage 3e is also damped. Consequently, a reduction in the flow rate of the fan flow-off air flow C1, which is caused by interference between the air flowing out from the openings 3d into the fan inner air passage 3e and the fan intake air flow B can be reliably prevented, and an increase in noise accompanying degradation in air supply efficiency can be prevented. Furthermore, because of the effect of preventing the reduction in flow volume of the fan blow-off air flow C1, a sufficient volume of air for cooling the motor can be ensured, and the motor 4 can be cooled efficiently.

[0048] The circumferential surface portion 18c of the air guiding cover 18 is hollow cone-shaped and its diameter decreases so that the cross-sectional area of the motor-side air passage 3f gradually decreases toward the lower edge of an opening 18b, the air flow inside the motor-side air passage 3f rises toward the lower edge opening 18b. As a result, cooling can be efficiently carried out on the entire motor 4 from the upper part of the motor 4 to the lower edge surface 4b of the motor 4, which is not sufficiently cooled in a known apparatus.

[0049] By designing each of the components so that the minimum gap spacing k is between 8 mm or more and 25 mm or less, G4/G1 is 40% or more, and G4/G5 is between 0.5% or more and 10% or less, damage caused by heat generated at the motor 4 can be prevented at low noise and a quiet, high quality ceiling-embedded-type air conditioning apparatus body can be obtained.

[0050] Since the air guiding cover 18 is composed of metal members, such as aluminum and plated steel plates, having high heat conductivity, heat from the heated air around the motor is transmitted to the air guiding cover 18. Also, since the air guiding cover 18 rotates together with the turbo fan 3, the volume of air passing by in contact with the surface of the air guiding cover 18 is increased compared with that in the case where the air guiding cover 18 is so formed as to not rotate, and heat radiation is promoted. In this way, a high motor cooling effect can be achieved. As a result, damage due to heat generation of the motor 4 can be prevented at low noise and a highly reliable ceiling-embedded-type air conditioning apparatus body can be obtained.

[0051] Since the openings formed in the fixing member of the motor 4, i.e., the openings 3d of the hub 3c, are provided at the bottom edge side (i.e., main plate 3b side) instead of the tip side of the truncated cone, the area of the members (hub 3c) between adjacent openings 3d is great compared with that in the case where the openings 3d having the same opening area are provided at the lower side surface or in the vicinity of the lower edge, as in a known hub. For this reason, great strength against torque generated by the motor 4 is achieved.

[0052] According to the first embodiment of the present invention, the circumferential surface portion 18c of the air guiding cover 18 and the circumferential surface portion 3ca of the hub 3c are substantially parallel to each other. Instead, as shown in Fig. 13, a cylindrical portion 18d may be provided by bending the circumferential surface portion 18c of the air guiding cover 18 along the outer peripheral surface on the motor 4 side. When employing such a structure, since air flowing into the air guiding cover 18 on the motor 4 side can be reliably disposed along the surface of the motor 4, the motor cooling efficiency can be improved even more. Similarly as described above, a quiet, highly reliable ceiling-embedded-type air conditioning apparatus that is capable of reducing abnormal electromagnetic noise and bearing rotating noise, and capable of preventing damage of the motor 4 can be obtained.

Second Embodiment

[0053] A ceiling-embedded-type air conditioning apparatus according to a second embodiment of the present invention will be described below with reference to Figs. 14 to 19.

[0054] Fig. 14 illustrates a longitudinal cross-sectional view of the inside of the air conditioning apparatus according to the second embodiment of the present invention. Fig. 15 illustrates a horizontal cross-sectional view of the inside of the air conditioning apparatus body 1 shown in Fig. 14 viewed from the top panel. Fig. 16 illustrates an enlarged view of a turbo fan 3 and its vicinity shown in Fig. 14. Fig. 17 illustrates a schematic view of a turbo fan 3 coming in contact with a top-panel-side heat-insulating material 1e by pivoting on a supporting point at a fixed point of the hub 3c and the rotary shaft 4a during transportation. In these drawings, the same components as those according to the first embodiment shown in Figs. 1 to 4 are represented by the same reference numerals, and descriptions thereof are omitted.

[0055] The second embodiment is the same as the first embodiment shown in Fig. 2 except that, on the top-panel-side heat-insulating material 1e, a rectifying section 1g for limiting the flow volume flowing from the gap E1 to the motor 4 side is provided in a ring-shaped fan main plate-corresponding area 1f opposing the main plate 3b. In this way, the flow volume emitted from openings 3d to the fan inner air passage 3e is reduced to lower noise. The rectifying section 1g is provided as a single unit with the top-panel-side heat-insulating material 1e.

[0056] The shape of the rectifying section 1g is described in detail below with reference to Figs. 16 to 18. Fig. 18 illustrates a perspective view from the portion corresponding to the fan side of the heat-heat-insulating material 1c.

[0057] The rectifying section 1g is substantially a ring-shaped, and the distance from the main plate 3b in the height

direction is reduced from the outer circumferential portion toward the inner circumferential portion. The minimum gap E1 between the rectifying section 1g and the main plate 3b and a gap D1 between the main plate 3b and the top-panel-side heat-insulating material 1e in the height direction are set to establish a predetermined relationship. Furthermore, a side surface 1h of the rectifying section 1g, as shown in Fig. 17, is formed at an angle so that, when the turbo fan 3 pivots on a supporting point at a fixed portion 3h of the hub 3c and the rotary shaft 4a and comes in contact with the rectifying section 1g during transportation, the outer circumferential edge of the turbo fan 3 is not brought into point contact with the rectifying section 1g. More specifically, the shape of the inclined side surface 1h is a polygonal shape so that the hub comes into line contact or surface contact with the outer circumferential edge of the turbo fan 3, as shown in Fig. 18.

[0058] By providing the rectifying section 1g having the above-described structure, a flow C2 blown out from an outlet 3i of the turbo fan 3 and reversed in a direction toward the gap E1 between the main plate 3b and the top-panel-side heat-insulating material 1e is prevented from excessively flowing into a motor-side air passage 3f. Therefore, the flow volume of air flowing out from the openings 3d to the fan inner air passage 3e can be reduced, the air is prevented from interfering with the fan intake air flow B and the generation of shear distortion is suppressed. In this way, noise can be reduced.

[0059] Next, the dimensional design of the rectifying section 1g for sufficiently obtaining a motor 4 cooling effect and a noise reduction effect will be described with reference to the subsequent Fig. 19.

[0060] Fig. 19(a) illustrates the change in the noise value corresponding to E1/D1 (proportion of the minimum gap E1 between the rectifying section 1g and the main plate 3b in the gap D1 between the top-panel-side heat-insulating material 1e and the main plate 3b in the height direction) uner the condition that the air supply volumes are the same. Fig. 19(b) illustrates the motor cooling efficiency corresponding to E1/D1 when the air supply volumes are the same.

[0061] If E1/D1 is too small, the flow resistance of the gap D1 is great, causing air to not flow. As a result, noise is reduced, as shown in Fig. 19(a). At the same time, the flow volume to the surface of the motor 4 is reduced, causing the motor 4 to not be sufficiently cooled. As a result, the motor cooling efficiency deteriorates, as shown in Fig. 19(b). On the other hand, if E1/D1 is too great, excessive air flows to the gap D1, causing noise to be great, as shown in Fig. 19(a). At the same time, sufficient air flows to the surface of the motor 4, increasing the motor 4 cooling efficiency. Accordingly, in this embodiment, E1/D1 is set between 0.3 and 0.7 to balance the motor 4 cooling effect and the noise reduction effect. In this way, the motor cooling efficiency is increased, and, thus, damage due to heat generated at the motor 4 can be prevented and the noise values can be reduced.

[0062] In this way, according to the second embodiment, the same advantages as those according to the first embodiment are achieved. Also, according to the second embodiment, since the rectifying section 1g having the above-described shape is provided, the air flow C2 blown out of the outlet 3i of the turbo fan 3 and reversed in a direction toward the gap E1 between the main plate 3b and the top-panel-side heat-insulating material 1e is prevented from excessively flowing into a motor-side air passage 3f. Therefore, the flow volume of air flowing out from the openings 3d to the fan inner air passage 3e can be reduced, the air is prevented from interfering with the fan intake air flow B, and the generation of shear distortion is suppressed. In this way, noise can be reduced.

[0063] Since, in case the main plate 3b of the turbo fan 3 comes in contact with the top-panel-side heat-insulating material 1e during transportation, the manner of contact is not point contact as in the case of a known apparatus but is line contact or surface contact, as indicated by J in Fig. 17, stress concentration to the main plate 3b due to impact can be avoided, and damaging of the turbo fan 3 can be prevented. Furthermore, there is an advantage in that the rectifying section 1g can be formed as a single unit using the heat-heat-insulating material 1, which constitutes the air passage, when molding the heat-insulating material 1c. Thus, other components do not have to be composed and the assembling process can be simplified. As a result, a highly reliable, low-noise ceiling-embedded-type air conditioning apparatus capable of preventing motor damage by improving the motor cooling efficiency and providing a comfortable environment for a resident can be obtained.

[0064] Since E1/D1 is set between 0.3 and 0.7, a ceiling-embedded air conditioning apparatus having both a motor 4 cooling effect and a noise reduction effect can be obtained.

[0065] The side surface of rectifying section 1g according to this embodiment is formed in a polygonal shape. However, the shape is not limited so long as the side surface of rectifying section 1g is shaped so that the outer circumferential edge of the turbo fan 3 can be brought into line contact or surface contact. In other words, the shape may be that illustrated in Fig. 20 as described below.

[0066] Fig. 20 illustrates a perspective view of another example of the rectifying section 1g having different shape. In this example, the side surface 1h of the rectifying section 1g is shaped as the inclined surface of a truncated cone. In this case, also, since at least the main plate 3b and the side surface 1h are brought into line contact, stress concentration due to impact imposed on the main plate 3b can be avoided and damaging of the turbo fan 3 can be prevented. When employing this shape, similar to the above, if E1/D1 is 0.3 to 0.7, a ceiling-embedded air conditioning apparatus having both a motor 4 cooling effect and a noise reduction effect can be obtained.

[0067] In this embodiment, the rectifying section 1g is formed of the top-panel-side heat-insulating material 1e. However,

for example, as shown in Fig. 21, the rectifying section 1g may be formed by deforming a section of the fan main plate-corresponding area 1f of the chassis top panel 1b. In such a case, even if the top-panel-side heat-insulating material 1e is not provided inside the air passage of the top panel 1b, the rectifying section 1g can be provided as a single unit with the chassis top panel 1b without the top-panel-side heat-insulating material 1e, so that cost can be reduced.

Third Embodiment

[0068] A ceiling-embedded-type air conditioning apparatus according to a third embodiment of the present invention will be described below with reference to Figs. 22 and 23.

[0069] Fig. 22 illustrates a longitudinal cross-sectional view of the inside of the air conditioning apparatus according to the third embodiment of the present invention. Fig. 23 illustrates a perspective view of a rectifying plate 19 shown in Fig. 22. In these drawings, the same components as those according to the first embodiment shown in Figs. 1 to 4 are represented by the same reference numerals, and descriptions thereof are omitted.

[0070] The third embodiment is the same as the second embodiment shown in Fig. 14, except that, instead of forming the rectifying section 1g on the top-panel-side heat-insulating material 1e, a rectifying plate 19 having a shape corresponding to the rectifying section 1g and functioning in the same way as the rectifying section 1g is detachably installed. The rectifying plate 19 is composed of a sheet metal member or a plastic member and is fixed to the top-panel-side heat-insulating material 1e and the chassis top panel 1b with screws.

[0071] By employing such a structure, the same advantages as those according to the first and second embodiments are achieved and the rectifying plate 19 is made replaceable. Therefore, the flow resistance changes because of partial change of the specifications of the structural components, such as the heat exchanger 6 and the filter 14, the flow volume of the gap E2 between the main plate 3b and the rectifying plate 19 can be adjusted appropriately according to the model by simply changing the rectifying plate 19.

[0072] The shape of the rectifying plate 19, similar to the above-described rectifying section 1g, is not limited to the shape illustrated in the drawings and the shape may be that illustrated in following Fig. 24.

[0073] In this example, the side surface 1h of the rectifying plate 19 is shaped as the inclined surface of a truncated cone. In this case also, since at least the main plate 3b and the side surface 1 1h are brought into line contact, stress concentration due to impact imposed on the main plate 3b can be avoided and damaging of the turbo fan 3 can be prevented. As described above, if E1/D1=0.3 to 0.7, a ceiling-embedded air conditioning apparatus having both a motor 4 cooling effect and a noise reduction effect can be obtained.

Fourth Embodiment

[0074] A ceiling-embedded-type air conditioning apparatus according to a third embodiment of the present invention will be described below with reference to Figs. 25 and 32.

[0075] Fig. 25 is a longitudinal cross-sectional view of the inside of an air conditioning apparatus according to the fourth embodiment of the present invention. Fig. 26 illustrates a z-z cross-sectional view. Fig. 27 illustrates the exterior of a top panel viewed from an arrow S in Fig. 25. Fig. 28 illustrates a partially enlarged view of the turbo fan 3 and its vicinity illustrated in Fig. 25. Fig. 29 illustrates a cross-sectional perspective view taken along line V-V in Fig. 26. Fig. 30 illustrates a partial cross-sectional side view of a motor 4. Fig. 31 illustrates a schematic view of a driving substrate built-in the motor 4. Fig. 32 illustrates the measurement experiment results of the motor surface temperature and the noise value corresponding to the positional relationship between the radially positioned air guiding passage 1k and the turbo fan 3 shown in Fig. 25. In these drawings, the same components as those according to the first embodiment shown in Figs. 1 to 4 are represented by the same reference numerals, and descriptions thereof are omitted.

[0076] The fourth embodiment is the same as the first embodiment shown in Fig. 1 except that, a plurality of reinforcement ribs 1i is provided on the chassis top panel 1b so as to improve the strength of the chassis top panel 1b and a top-panel-side heat-insulating material 1ea is provided on the reinforcement ribs 1i and the chassis top panel 1b so as to form radially positioned air guiding passage 1k for guiding a flow C2 to the motor 4 in order to improve the motor 4 cooling efficiency.

[0077] A plurality of the reinforcement ribs 1 i is provided on the chassis top panel 1 b in an area corresponding to the inner side of the heat exchanger 6 in a manner such that the reinforcement ribs 1i extend from the outer peripheral portion of an area opposing the motor 4 toward the chassis side panels 1a and protrude toward the inner side of the body. On the inner side of the chassis top panel 1b and the chassis side panels 1 a having such reinforcement ribs 1i, a heat-insulating material 1ca having a substantially overall box shape is disposed constituting an air passage wall surface. The heat-insulating material 1ca includes the top-panel-side heat-insulating material 1ea disposed flush with part of or the entire inner surface of the chassis top panel 1b and a side panel-side heat-insulating material 1d that is the same as the above-described one. Since the fourth embodiment is characterized by the top-panel-side heat-insulating material 1ea, the shape of the top-panel-side heat-insulating material 1ea will be described in detail below.

[0078] As described above, the top-panel-side heat-insulating material 1ea is disposed flush with part of or the entire inner surface of the chassis top panel 1 b, but, according to this embodiment, the top-panel-side heat-insulating material 1ea is disposed flush with part of the inner surface of the chassis top panel 1b. In other words, the reinforcement ribs 1i are provided on the chassis top panel 1b in a manner such that the reinforcement ribs 1 i protrude toward the inner side of the body, and the top-panel-side heat-insulating material 1ea is formed so that it is disposed flush with the entire protruding surface 1ia on the basis of the protruding surface 1ia (refer to Fig. 29). The top-panel-side heat-insulating material 1ea is formed flush with part (several) of radially positioned areas 1ib among a plurality of radially positioned areas (i.e., the triangular area (one of which is a longitudinal area) 1ib positioned outside from the protruding surface 1ia and located between adjacent reinforcement ribs 1i on the chassis top panel 1 b) in a protruding manner. According to this embodiment, as shown in Fig. 26, the top-panel-side heat-insulating material 1ea is disposed flush with four of the radially positioned areas 1ib, and, for the other areas, the top-panel-side heat-insulating material 1ea is provided flat without being disposed flush with the radially positioned areas 1ib. Therefore, as shown in Figs. 26 and 29, the other radially positioned areas 1ib than the four radially positioned areas 1ib are hidden by being covered with the flat portion of the top-panel-side heat-insulating material 1ea.

[0079] The top-panel-side heat-insulating material 1ea having such a structure forms an area corresponding to the radially positioned areas 1ib (refer to Fig. 29) so that the radially positioned air guiding passage 1k having a gap distance to the main plate 3b that is greater than the gap distance between the reinforcement ribs 1i and the main plate 3b.

[0080] Next, the structure of the motor 4 to be cooled and the installation of the motor 4 are described with reference to Figs. 30 and 31.

[0081] The motor 4 is so constituted as to have an in-motor substrate 4h having a driver circuit 4d and a control circuit 4e mounted inside of the motor on the chassis top panel side (opposite side to the turbo fan) or, more specifically, is constituted of a DC motor. The in-motor substrate 4h is fixed to the inside of the motor 4. The rotor 4g is fixed to the rotary shaft 4a. A stator 4f including a coil and a core is disposed around the rotor 4g. The stator 4f is molded and formed as a single unit with a molding material 4k. The DC motor is formed by disposing the rotor 4g in a hollow portion formed in the stator 4f and holding the rotor 4g in a freely rotatable manner by the edge of the hollow portion and a bearing 4i press fit into a bracket 4L. Furthermore, the rotor 4g is formed by molding a plastic magnetic material into a cylindrical shape and has magnetic fields having N and S poles at the outer periphery.

[0082] On the in-motor substrate 4h, a hole element 4j for detecting the magnetic field of the rotor 4g and generating a revolution signal, the control circuit 4e for receiving the revolution signal and transmitting a revolution instructing signal voltage, and the driver circuit 4d for controlling the electrical power applied to the magnetic field of the stator 4f on the basis of the revolution instructing signal are mounted. On the driver circuit 4d of the in-motor substrate 4h, a power element 4M is mounted and is in contact with the bracket 4L with intervention of an insulating plate and a heat radiating silicone.

[0083] The in-motor substrate 4h is connected to an electronic substrate 25 inside an electric component box 24, as illustrated in Fig. 25, via wiring. As shown in Fig. 31, on the electronic substrate 25, an AC/DC converter 25a for converting a voltage (e.g., 200 V) of an AC power supply 26 into a DC voltage and boosting it to supply this DC voltage to the driver circuit 4d and a control circuit power supply 25b for supplying power to the control circuit 4e are mounted.

[0084] In the motor 4 having such a structure, the temperature of the heat generated at the power element 4M becomes higher than other components, such as the coil of the stator 4f, and, thus, heat is transmitted via the heat-radiating silicone so as to increase the temperature of the bracket 4L and a side surface 4c on the chassis top panel side of the motor 4. Therefore, if the bracket 4L and the side surface 4c on the chassis top panel side of the motor 4 does not radiate heat, the power element 4M will be damaged by the generated heat, and the motor 4 will fail. In other words, to prevent the damaging of the motor 4, it is necessary to mainly cool the bracket 4L and the side surface 4c on the chassis top panel side of the motor 4.

[0085] As another example of the motor 4, if the motor 4 is a DC motor indicating the driver circuit 4d and the control circuit 4e mounted on the electronic substrate 25 accomodated in the electric component box 24 outside the motor, the rotary shaft 4a is heated by heat transmitted from the stator 4f having the highest temperature in the motor 4, lubricant oil of the bearing 4i is degraded by the high temperature, and the bearing 4i seizes, causing the motor 4 to be damaged. In other words, for this case also, to prevent damaging of the motor 4, it is necessary to mainly cool a bearing-corresponding portion 4P (refer to Fig. 28) on the surface of the motor and the bracket 4L in contact with the bearing 4i. The bearing-corresponding portion 4P is a portion of the outer surface of the bearing 4i of the motor 4.

[0086] Next, the cooling effect on the motor 4 by proving the radially positioned air guiding passages 1k will be described.

[0087] In the top-panel-side heat-insulating material 1ea, the portion being disposed flush with the radially positioned areas 1ib and constituting the radially positioned air guiding passages 1k has a greater gap distance E1 compared with other portions (i.e., the flat portion formed in accordance with the protruding surface 1ia of the reinforcement ribs 1 i). Therefore, the flow volume and speed of part of the blow-off air flow C2 from the turbo fan 3 can be increased when the air is drawn to the motor 4. Consequently, the cooling effect on the motor 4 is increased.

[0088] The direction of the flow C2 which rotates between the main plate 3b and the top-panel-side heat-insulating

material 1ea and is drawn toward the motor 4 is changed by coming into contact with a side surface 1 ka of the radially positioned air guiding passage 1 k, as shown in Fig. 29. Thus, the side surface 4c of the motor 4 on the chassis top panel side and the bracket 4L on the top surface of the motor 4 on the chassis top panel side are cooled.

[0089] According to this example, the top-panel-side heat-insulating material 1ea is disposed flush only with part of the radially positioned areas 1ib among all of the radially positioned areas 1ib. The top-panel-side heat-insulating material 1ea is not disposed flush with all of the radially positioned areas 1ib because, if the top-panel-side heat-insulating material 1ea is disposed flush with all of the radially positioned areas 1ib, noise may increase.

[0090] As shown in Fig. 28, the air C2 passing through the gap E1 between the main plate 3b and the top-panel-side heat-insulating material 1eb and flowing into the motor-side air passage 3f flows around the motor 4 and, then, is emitted from the openings 3d toward the fan inner air passage 3e. At this time, since the flow of air passes through the bearing-corresponding portion 4P on the motor surface, the bearing- corresponding portion 4P can be cooled. Thus, the bearing-corresponding portion 4P can be sufficiently cooled. Since the motor 4 can be sufficiently cooled in this way, the turbo fan 3 can be rotated until the limit temperature of the power element 4M is reached. In this way, the air supply volume can be increased, and the heat-exchange ability of the heat exchanger 6 can be improved. Moreover, since inner circuit loss of the power element 4M can be reduced, motor efficiency is improved and energy can be conserved.

[0091] Next, the positional relationship between a radially positioned air guiding passage 1k and the turbo fan 3 for obtaining a high motor 4 cooling effect and a high noise reduction effect is described.

[0092] If an inner circumferential edge 1 kb of the radially disposed air guiding passage 1k is disposed away from the motor 4, it becomes difficult to draw a flow toward the chassis top panel-side side surface 4c of the motor 4 and the bracket 4L, causing insufficient cooling. If an outer circumferential edge 1 kc of the radially positioned air guide passage 1 k is disposed further outward than the outer circumference of the turbo fan 3, the blow-off flow C1, instead of the flow C2 passing through the gap E1 and being directed toward the motor-side air passage 3f, directly collides with the side surface 1 ka of the radially positioned air guiding passage 1 k, causing an increase in noise. When the blow-off flow C1 directly collides with the side surface 1 ka of the radially positioned air guiding passage 1 k and its direction is changed toward the motor 4, the flow volume toward the motor 4 side increases, whereas the flow volume toward the heat exchanger 6 decreases. Therefore, the air flow must be increased to increase the heat exchanging ability, and, as a result, noise worsens.

[0093] By considering the above, the optimal positioning of the inner circumferential edge 1kb and the outer circumferential edge 1 kc of the radially positioned air guiding passage 1k for improving both the cooling effect and the noise reduction effect will be described.

[0094] Fig. 32(a) illustrates the relationship between the position of the inner circumferential edge 1 kb of the radially positioned air guiding passage 1k and the surface temperature T1 of the bracket 4L disposed on the chassis top panel side of the motor 4 after being operated for the same amount of time. Fig. 32(b) illustrates the relationship between the position of the outer circumferential edge 1 kc of the radially positioned air guiding passage 1k and the noise value SP at the same flow volumes. Fig. 32(c) illustrates the relationship between the position of the outer circumferential edge 1 kc of the radially positioned air guiding passage 1k and the surface temperature T1 of the bracket 4L disposed on the chassis top panel side of the motor 4 after being operated for the same amount of time.

[0095] If $0 \leq L2 \leq 0.3 \times L1$, as shown in Fig. 32(a), where L1 represents the outer diameter of the turbo fan 3, L0 represents the distance between the rotary shaft center 4ac of the motor 4 and the outer circumferential edge 1 kc of the radially positioned air guiding passage 1 k, and L2 represents the distance between the rotary shaft center 4ac of the motor 4 and the inner circumferential edge 1 kb of the radially positioned air guiding passages 1 k, the motor 4 is sufficiently cooled compared with the case where the radially positioned air guiding passages 1k are not provided (i.e., when L2=0.5xL1). This is presumed to be true because a large area for the side surface 1 ka of the radially positioned air guiding passages 1k can be obtained and the air flow toward the motor 4 can be increased.

[0096] As shown in Fig. 32(b), if $L0 \leq 0.6 \times L1$, the noise value almost does not worsen. As shown in Fig. 32(c), if $0.5 \times L1 \leq L0$, i.e., if the outer circumferential edge 1 kc of the radially positioned air guiding passage 1k is further outward than the main plate 3b, the motor 4 will be sufficiently cooled.

[0097] Consequently, by setting the dimensions within the ranges of $0.5 \times L1 \leq L0 \leq 0.6 \times L1$ and $0 \leq L2 \leq 0.3 \times L1$, the motor 4 will be sufficiently cooled and the noise value does not worsen, enabling a high quality ceiling-embedded air conditioning apparatus to be obtained.

[0098] As described above, according to the fourth embodiment, since the reinforcement ribs 1i are formed on the chassis top panel 1b in a manner such that they protrude toward the inside of the body, strength can be increased without increasing the height of the body. In this way, the thickness and the weight of the chassis top panel 1b can be reduced. Moreover, since the radially positioned air guiding passage 1k having the ability to change the direction of the flow C2 toward the motor 4 is formed with the top-panel-side heat-insulating material 1ea provided on the inner side of the chassis top panel 1 b, the motor 4 can be effectively cooled and damaging of the motor can be prevented.

[0099] Since a heat-insulating material (top-panel-side heat-insulating material 1ea) is provided on the inner surface of chassis top panel 1 b, even when the heat exchanger 6 is cooled during cooling operation, the atmosphere inside the

body is also cooled, and the humidity of the area under roof where the air conditioning apparatus body 1 is installed is high, dew condensation on the surface of the chassis top panel 1b can be prevented. In this way, drew does not drop on the floor of the room to cause the floor to get dirty, and the cleanliness of the floor can be maintained.

[0100] By setting the dimensions within the ranges of $0.5 \times L1 \leq L0 \leq 0.6 \times L1$ and $0 \leq L2 \leq 0.3 \times L1$, a low-noise, high quality ceiling-embedded air conditioning apparatus capable of both improving the motor 4 cooling efficiency and suppressing the worsening of the noise value and capable of preventing damaging by heat generated at the motor 4.

[0101] Since the in-motor substrate 4h including the driver circuit 4d and the control circuit 4e is stored inside the motor 4, the size of the electric component box 24 can be reduced compared with the size of an electric component box 24 including the driver circuit 4d and the control circuit 4e. In this way, the bellmouth 5 and the body intake air passage 11 are not partially blocked. Therefore, reduction of flow resistance and prevention of an intake drift are possible, and noise reduction is possible.

[0102] If the height of the top surface (surface of the bracket 4L of the motor 4) of the motor 4on the chassis top panel 1 b side of the motor 4 is lower (closer to the turbo fan 3) than the height of the surface of the top-panel-side heat-insulating material 1ea, shown in a dotted line in Fig. 28, a space is formed in the vicinity of the bracket 4L, allowing the flow C2 to easily flow into the bracket 4L. Therefore, the cooling effect can be improved, and, as a result, the motor efficiency is improved, enabling a high quality ceiling-embedded air conditioning apparatus capable of excellent energy saving to be obtained.

Fifth Embodiment

[0103] A ceiling-embedded-type air conditioning apparatus according to a fifth embodiment of the present invention will be described below with reference to Figs. 33 to 35.

[0104] Figs. 33 and 34 illustrate the same body according to the fourth embodiment, except that the radially disposed reinforcement ribs 1i protrude toward the outside of the body. Fig. 33 illustrates the chassis top panel 1 b viewed from the side of a top-panel-side heat-insulating material 1eb. A Y-Y cross-sectional view of Fig. 33 is substantially the same as Fig. 28. Fig. 34 illustrates a plan view of the exterior of the chassis top panel 1 b. Fig. 35 illustrates a cross-sectional perspective view taken along line V-V in Fig. 33. In these drawings, the same components as those according to the first embodiment shown in Figs. 1 to 4 and those according to the fourth embodiment shown in Figs. 25 to 32 are represented by the same reference numerals, and descriptions thereof are omitted.

[0105] The fifth embodiment is the same as the fourth embodiment, except that the radially disposed reinforcement ribs 1i protrude toward the outside of the body instead of the inside of the body. On the inner surface side of the chassis top panel 1b and the chassis side panels 1 a having such reinforcement ribs 1i protruding toward the outside, a substantially box-shaped heat-insulating material 1cb is disposed to form an air passage side surface. The heat-insulating material 1cb includes a top-panel-side heat-insulating material 1ea disposed flush with part of or the entire inner surface of the chassis top panel 1b and a side panel-side heat-insulating material 1d, which is the same as the above-described one. Since the fifth embodiment is characterized by the top-panel-side heat-insulating material 1eb, the shape of the top-panel-side heat-insulating material 1eb will be described in detail below.

[0106] The top-panel-side heat-insulating material 1eb, similar to the fourth embodiment, is disposed flush with part of the chassis top panel 1 b instead of flush with the entire chassis top panel 1 b. More specifically, on the chassis top panel 1 b, the reinforcement ribs 1i protruding toward the outside of the body are formed, as shown in Fig. 34, and the top-panel-side heat-insulating material 1eb are formed so that they are disposed flush with the entire surface 1ic based on the protruding surface 1 ic (refer to Fig. 35). The top-panel-side heat-insulating material 1 eb is formed flush with part (several) of the reinforcement ribs 1i among all the reinforcement ribs 1i protruding further outward than the surface 1 ic, in a protruding manner. According to this embodiment, as shown in Fig. 33, the top-panel-side heat-insulating material 1eb is disposed flush with four of the reinforcement ribs 1i, and, for the other areas, the top-panel-side heat-insulating material 1eb is provided flat without being disposed flush with the reinforcement ribs 1i. Therefore, as shown in Fig. 33, the reinforcement ribs 1i, except for the four reinforcement ribs 1i, are hidden by being covered with the flat portion of the top-panel-side heat-insulating material 1eb.

[0107] In the heat-insulating material 1eb having such a structure, the area formed flush with the reinforcement ribs 1i constitutes a radially positioned air guiding passages 1 k' having a gap distance to the main plate 3b that is greater than the gap distance between the area formed flat and not flush with the reinforcement ribs 1i and the main plate 3b.

[0108] By employing such a structure, similar to the fourth embodiment where the radially positioned air guiding passages 1 k are provided, reduction of weight by increasing the strength and guiding part of the blow-off flow C2 of the turbo fan 3 by the radially positioned air guiding passage 1 k' are possible. In this way, it is possible to effectively cool the side surface 4c of the motor 4 on the chassis top panel side and the bracket 4L.

[0109] The air passing through the gap E1 between the main plate 3b and the top-panel-side heat-insulating material 1eb and flowing into the motor-side air passage 3f flows around the motor 4 and, then, is emitted from the openings 3d toward the fan inner air passage 3e. At this time, since the flow of air passes through the bearing-corresponding portion

4P on the motor surface, the bearing-corresponding portion 4P can be sufficiently cooled and prevented from being damage. Since the motor 4 is sufficiently cooled in this way, the turbo fan 3 can be rotated until the limit temperature of the power element 4M is reached. In this way, the air supply volume can be increased, and the heat-exchange ability of the heat exchanger 6 can be improved. Moreover, since inner circuit loss of the power element 4M can be reduced, motor efficiency is improved, and energy can be saved.

[0110] Since the inner side of the chassis top panel 1b is covered with the top-panel-side heat-insulating material 1eb, even if part of the air cooled at the heat exchanger 6 flows into the motor 4, condensation can be prevented, enabling a high quality ceiling-embedded air conditioning apparatus to be obtained.

[0111] According to the above-described above in the fourth embodiment, as shown in Fig. 32, a dimensions satisfying $0.5\times L1\leq L0\leq 0.6\times L1$ and $0\leq L2\leq 0.3\times L1$ is effective for cooling the motor 4 and reducing noise. The same advantages are also achieved in the fifth embodiment.

Reference Numerals

[0112]

1:	ceiling-embedded-type air conditioning apparatus body
1a:	chassis side panels
1b:	chassis top panel
1c, 1ca, and 1cb:	heat-insulating material
1e, 1ea, and 1eb:	top-panel-side heat-insulating material
1f:	fan main plate-corresponding area
1g:	rectifying section
1h:	side surface
1i:	reinforcement ribs
1ia:	protruding surface
1ib:	radially positioned areas
1k:	radially positioned air guiding passage
1kb:	inner circumferential edge
1kc:	outer circumferential edge
3:	turbo fan
3a:	blades
3b:	main plate
3c:	hub
3ca:	circumferential surface portion
3cb:	flat portion
3cc:	cylindrical portion
3d:	openings
3e:	fan inner air passage
3f:	motor-side air passage
3g:	shroud
3h:	fixed portion
3i:	outlet
4:	motor
4a:	rotary shaft
4ac:	rotary shaft center
4b:	lower edge surface of motor
4d:	driver circuit
4e:	control circuit
4h:	in-motor substrate
5:	bellmouth
6:	heat exchanger
18:	air guiding cover
18a:	flange portion
18b:	lower edge opening
18c:	circumferential surface portion
19:	rectifying plate
23a:	intake air passage

23b: fan outlet air passage

[0113] The parent application claimed the following subject-matter which is included here as part of the disclosure, but not claimed.

[0114] A ceiling-embedded-type air conditioning apparatus comprising: (a) a ceiling-embedded-type air conditioning apparatus body (1) including a chassis top panel (1b); (b) a motor (4) disposed in the ceiling-embedded-type air conditioning apparatus body (1) in a manner such that a rotary shaft (4a) of the motor is arranged at right angles to the chassis top panel (1 b); (c) a turbo fan (3) including a downward-protruding hub (3c) covering the motor (4) and fixing the rotary shaft (4a) of the motor in place, a main plate (3b) extending from the periphery of an upper opening of the hub (3c) so as to oppose the top panel (1b) and having a plurality of blades (3a) attached to one surface of the main plate (3b) opposite to the other surface opposing the top panel (1b), and a shroud (3g) opposing the main plate (3b) and constituting a guiding channel for the blades (3a), the turbo fan (3) blowing out air taken in from the shroud side through a fan inner air passage (3e) formed on the side opposite to the motor side of the hub (3c); and (d) an air guiding cover (18) for guiding air flowing from a gap formed between the chassis top panel (1 b) and the main plate (3b) into a motor-side air passage (3f), the air guiding cover (18) being provided on the motor side of the hub (3c) so as to form the motor-side air passage (3f) between the motor (4) and the air guiding cover (18), wherein the air guiding cover (18) includes a circumferential surface portion (18c) extending downward from the side of the main plate (3b), the height position of the lower edge opening (18b) of the circumferential surface portion (18c) is positioned lower than the lower edge surface of the motor (4), and the hub (3c) includes a plurality of openings (3d) for letting air that flows from the gap into the motor-side air passage (3f) and then from the lower edge opening of the air guiding cover (18) into a gap between the air guiding cover (18) and the hub (3c) to flow out into the fan inner air passage (3e). Such a ceiling-embedded-type air conditioning apparatus wherein a plurality of the openings (3d) are formed on the hub (3c) in the vicinity of the main plate (3b). Such a ceiling-embedded-type air conditioning apparatus wherein the circumferential surface portion (18c) of the air guiding cover (18) is formed so that the cross-sectional area of the motor-side air passage (3f) decreases toward the lower edge opening (18b). Such a ceiling-embedded-type air conditioning wherein the hub (3c) and the circumferential surface portion (18c) of the air guiding cover (18) are both formed as truncated cones with substantially the same inclination. Such a ceiling-embedded-type air conditioning apparatus wherein the circumferential surface portion (18c) of the air guiding cover (18) includes a cylindrical portion in line with the outer peripheral surface of the motor (4). Such a ceiling-embedded-type air conditioning apparatus wherein, where k represents the minimum gap spacing between the air guiding cover (18) and the lower edge of the motor (4), G5 represents the area of an air outlet of the turbo fan (3), G1 represents a circular opening area G1 at a minimum gap spacing E2 between the air guiding cover (18) and the hub (3c), and G4 represents the total opening area of the openings (3d), each of the relevant components maintain relationships so that the minimum gap spacing k is between 8 mm and 25 mm, G4/G1 is 40% or more, and G4/G5 is between 0.5% and 10%. Such a ceiling-embedded-type air conditioning apparatus wherein the air guiding cover (18) is formed of a metal member with high heat-conductivity and is fixed to the turbo fan (3) so as to rotate together with the turbo fan. Such a ceiling-embedded-type air conditioning apparatus wherein a rectifying section (1g) is provided in a gap between a fan main plate-corresponding area (1f) on the chassis top panel (1 b) opposing the main plate (3b) and the main plate (3b) in a manner such that the gap becomes thinner towards the center of the main plate (3b). Such a ceiling-embedded-type air conditioning apparatus wherein a side surface of the rectifying section (1g) is formed at an angle so that, when the turbo fan (3) comes in contact with the rectifying section (1g) by pivoting on a support point at a fixed portion (3h) of the hub (3c) and the motor rotary shaft (4a) during transportation, the outer circumferential edge of the turbo fan (3) is not brought into point contact with the side surface of the rectifying section (1g). Such a ceiling-embedded-type air conditioning apparatus wherein the rectifying section (1g) is formed in a polygonal shape so that, when the turbo fan (3) comes in contact with the rectifying section (1 g) by pivoting on a support point at a fixed portion (3h) of the hub (3c) and the motor rotary shaft (4a) during transportation, the turbo fan (3) is brought into line contact or surface contact with the rectifying section (1g). Such a ceiling-embedded-type air conditioning apparatus wherein the rectifying section (1g) is formed as a truncated cone so that, when the turbo fan (3) comes in contact with the rectifying section (1g) by pivoting on a support point at a fixed portion (3h) of the hub (3c) and the motor rotary shaft (4a) during transportation, the turbo fan (3) is brought into line contact with the rectifying section. Such a ceiling-embedded-type air conditioning apparatus wherein, on the main plate side of the chassis top panel (1b), a top-panel-side heat-insulating material (1e, 1ea, 1eb) defining an air passage on the inner side of the chassis top panel (1b) is provided, and the rectifying section (1g) is formed as a single unit with the top-panel-side heat-insulating material (1eb). Such a ceiling-embedded-type air conditioning apparatus wherein, the rectifying section (1g) is formed by deforming the fan main plate-corresponding area (1f) of the chassis top panel (1b). Such a ceiling-embedded-type air conditioning apparatus wherein the rectifying section (1g) is a rectifying plate (19) detachably fixed directly or indirectly on the chassis top panel (1 b). Such a ceiling-embedded-type air conditioning apparatus wherein a proportion E1/D1 of a minimum gap E1 between the rectifying section (1g) and the main plate (3b) in a gap D1 between the top-panel-side heat-insulating material and the main plate (3b) in the height direction is 0.3 to 0.7.

Claims

1. A ceiling-embedded-type air conditioning apparatus comprising:

   (a) a ceiling-embedded-type air conditioning apparatus body (1) including a chassis top panel (1b);
   (b) a motor (4) disposed in the ceiling-embedded-type air conditioning apparatus body (1) in a manner such that a rotary shaft (4a) is orthogonal to the chassis top panel (1b); and
   (c) a turbo fan (3) that includes
   a downward-protruding hub (3c), which covers the motor (4) and to which the rotary shaft (4a) of the motor is fixed,
   a main plate (3b), which extends from the periphery of an upper opening of the hub (3c) so as to oppose the top panel (1b) and has a plurality of blades (3a) attached to one surface of the main plate (3b) opposite to the other surface opposing the chassis top panel (1b), and
   a shroud (3g), which opposes the main plate (3b) and constitutes a guide flow path of the blades (3a),
   and that blows out air sucked from the shroud side through a fan inner air passage (3e) formed on the opposite side of the motor side of the hub (3c), **characterized in that**
   a rectifying section (1g) is provided on a fan main plate-corresponding area (1f) opposing the main plate (3b) of a top-panel-side heat-insulating material (1e) provided inside of the chassis top panel (1b) such that a gap with the main plate (3b) is a predetermined distance, and
   the proportion E1/D1 of a minimum gap E1 between the rectifying section (1g) and the main plate (3b) of a gap D1 between the top-panel-side heat-insulating material (1e) and the main plate (3b) in the height direction is 0,3 to 0.7.

2. The ceiling-embedded-type air conditioning apparatus according to Claim 1, wherein the rectifying section (1g) is formed into a ring shape protruding towards the main plate side (3b).

3. The ceiling-embedded-type air conditioning apparatus according to Claim 1 or 2, wherein on the main plate side of the chassis top plate (1b), a top-panel-side heat-insulating material (1e) defining an air passage on the inner side of the chassis top plate (1b) is provided and the rectifying section (1g) is integrally formed by the top-panel-side heat-insulating material (1e).

4. The ceiling-embedded-type air conditioning apparatus according to any of Claims 1 to 3, wherein between the fan main plate corresponding area opposing the main plate (3b) of the chassis top plate (1b) and the main plate (3b), the rectifying section (1g) is formed in an inclined fashion such that the gap with the main plate (3b) becomes thinner as approaching the center of the main plate (3b).

5. The ceiling-embedded-type air conditioning apparatus according to any of Claims 1 to 4, wherein the rectifying section (1g) is formed into a polygon shape.

6. The ceiling-embedded-type air conditioning apparatus according to any of Claims 1 to 4, wherein the rectifying section (1g) is formed into a truncated cone shape.

Patentansprüche

1. Klimatisierungsvorrichtung in Deckeneinbauausführung umfassend:

   (a) einen Klimatisierungsvorrichtungskörper (1) in Deckeneinbauausführung, welcher eine Gehäusedeckplatte (1b) aufweist;
   (b) einen Motor (4), welcher in dem Klimatisierungsvorrichtungskörper (1) in Deckeneinbauausführung in einer derartigen Art und Weise angeordnet ist, dass eine Drehwelle (4a) orthogonal zu der Gehäusedeckplatte (1b) ist; und
   (c) ein Turbogebläse (3), welches aufweist eine nach unten hervorragende Nabe (3c), welche den Motor (4) abdeckt und an welcher die Drehwelle (4a) des Motors befestigt ist,
   eine Hauptplatte (3b), welche sich von dem Umfang einer oberen Öffnung der Nabe (3c) erstreckt, um der Deckplatte (1b) gegenüberzuliegen, und mehrere Flügel (3a) aufweist, welche an einer Fläche der Hauptplatte (3b) gegenüberliegend zu der anderen der der Gehäusedeckplatte (1b) gegenüberliegenden Fläche angebracht sind, und
   einen Kragen (3g), welcher der Hauptplatte (3b) gegenüberliegt und einen Führungsströmungspfad der Flügel

(3a) bildet,
und welcher Luft ausbläst, welche von der Kragenseite durch einen inneren Gebläseluftdurchgang (3e) angesaugt wird, welcher an der gegenüberliegenden Seite der Motorseite der Nabe (3c) ausgebildet ist, **dadurch gekennzeichnet, dass**
ein Gleichrichtungsabschnitt (1g) an einer der Gebläsehauptplatte entsprechenden Fläche (1f) gegenüberliegend der Hauptplatte (3b) eines innerhalb von der Gehäusedeckplatte (1b) vorgesehenen deckplattenseitigen wärmeisolierenden Materials (1e) derart vorgesehen ist, dass eine Lücke mit der Hauptplatte (3b) einen vorbestimmten Abstand hat, und
der Anteil E1/D1 von einer minimalen Lücke E1 zwischen dem Gleichrichtungsabschnitt (1g) und der Hauptplatte (3b) einer Lücke D1 zwischen dem deckplattenseitigen wärmeisolierenden Material (1e) und der Hauptplatte (3b) in der Höhenrichtung 0,3 bis 0,7 beträgt.

2. Klimatisierungsvorrichtung in Deckeneinbauausführung nach Anspruch 1, wobei der Gleichrichtungsabschnitt (1g) in einer Ringform ausgebildet ist, welche in Richtung der Hauptplattenseite (3b) hervorragt.

3. Klimatisierungsvorrichtung in Deckeneinbauausführung nach Anspruch 1 oder 2, wobei auf der Hauptplattenseite der Gehäusedeckplatte (1b) ein deckplattenseitiges wärmeisolierendes Material (1e), welches einen Luftdurchgang auf der Innenseite der Gehäusedeckplatte (1b) definiert, vorgesehen ist und der Gleichrichtungsabschnitt (1g) integriert mit dem deckplattenseitigen wärmeisolierenden Material (1e) ausgebildet ist.

4. Klimatisierungsvorrichtung in Deckeneinbauausführung nach einem der Ansprüche 1 bis 3, wobei zwischen der der Gebläsehauptplatte entsprechenden Fläche gegenüberliegend zu der Hauptplatte (3b) der Gehäusedeckplatte (1b) und der Hauptplatte (3b) der Gleichrichtungsabschnitt (1g) in einer geneigten Art und Weise derart ausgebildet ist, dass die Lücke mit der Hauptplatte (3b) dünner wird, während sie sich der Mitte der Hauptplatte (3b) annähert.

5. Klimatisierungsvorrichtung in Deckeneinbauausführung nach einem der Ansprüche 1 bis 4, wobei der Gleichrichtungsabschnitt (1g) in einer Polygonform ausgebildet ist.

6. Klimatisierungsvorrichtung in Deckeneinbauausführung nach einem der Ansprüche 1 bis 4, wobei der Gleichrichtungsabschnitt (1g) in einer Kegelstumpfform ausgebildet ist.

Revendications

1. Appareil de climatisation intégré dans un plafond, qui comprend :

(a) un corps d'appareil de climatisation intégré dans un plafond (1), qui comprend un panneau supérieur de châssis (1b) ;
(b) un moteur (4) disposé dans le corps d'appareil de climatisation intégré dans un plafond (1) de sorte qu'un arbre rotatif (4a) soit orthogonal par rapport au panneau supérieur de châssis (1b) ; et
(c) un turbo-ventilateur (3) qui comprend
un moyeu qui sort vers le bas (3c), qui recouvre le moteur (4) et sur lequel l'arbre rotatif (4a) du moteur est fixé,
une plaque principale (3b), qui s'étend depuis la périphérie d'une ouverture supérieure du moyeu (3c) de façon à s'opposer au panneau supérieur (1 b), et possède une pluralité de pales (3a) fixées sur une surface de la plaque principale (3b) opposée à l'autre surface opposée au panneau supérieur de châssis (1 b), et
une enveloppe (3g), qui est opposée à la plaque principale (3b) et constitue un trajet d'écoulement de guidage des pales (3a), et qui évacue l'air aspiré côté enveloppe par le biais d'un passage d'air intérieur (3e) formé sur le côté opposé au côté moteur du moyeu (3c), **caractérisé en ce que**
une section de rectification (1g) est prévue sur une zone qui correspond à la plaque principale du ventilateur (1f) opposée à la plaque principale (3b) en matériau d'isolation thermique côté panneau supérieur (1e) prévu à l'intérieur du panneau supérieur de châssis (1 b) de sorte qu'un espace avec la plaque principale (3b) soit une distance prédéterminée, et
le rapport E1/D1 entre un espace minimum E1 situé entre la section de rectification (1g) et la plaque principale (3b) et un espace D1 situé entre le matériau d'isolation thermique côté panneau supérieur (1e) et la plaque principale (3b) dans la direction de la hauteur est de 0,3 à 0,7.

2. Appareil de climatisation intégré dans un plafond selon la revendication 1, dans lequel la section de rectification (1g) est formée comme une bague qui sort vers le côté plaque principale (3b).

3. Appareil de climatisation intégré dans un plafond selon la revendication 1 ou 2, dans lequel, sur le côté plaque principale de la plaque supérieure de châssis (1b), un matériau d'isolation thermique côté panneau supérieur (1e) qui définit un passage d'air sur le côté intérieur de la plaque supérieure de châssis (1 b) est prévu, et la section de rectification (1g) est intégralement formée par le matériau d'isolation thermique côté panneau supérieur (1e).

4. Appareil de climatisation intégré dans un plafond selon l'une quelconque des revendications 1 à 3, dans lequel, entre la zone qui correspond à la plaque principale du ventilateur opposée à la plaque principale (3b) de la plaque supérieure de châssis (1b) et la plaque principale (3b), la section de rectification (1g) est formée de manière inclinée de sorte que l'espace avec la plaque principale (3b) devienne plus étroit dès que l'on s'approche du centre de la plaque principale (3b).

5. Appareil de climatisation intégré dans un plafond selon l'une quelconque des revendications 1 à 4, dans lequel la section de rectification (1g) est formée comme un polygone.

6. Appareil de climatisation intégré dans un plafond selon l'une quelconque des revendications 1 à 4, dans lequel la section de rectification (1g) est formée comme un cône tronqué.

FIG. 1

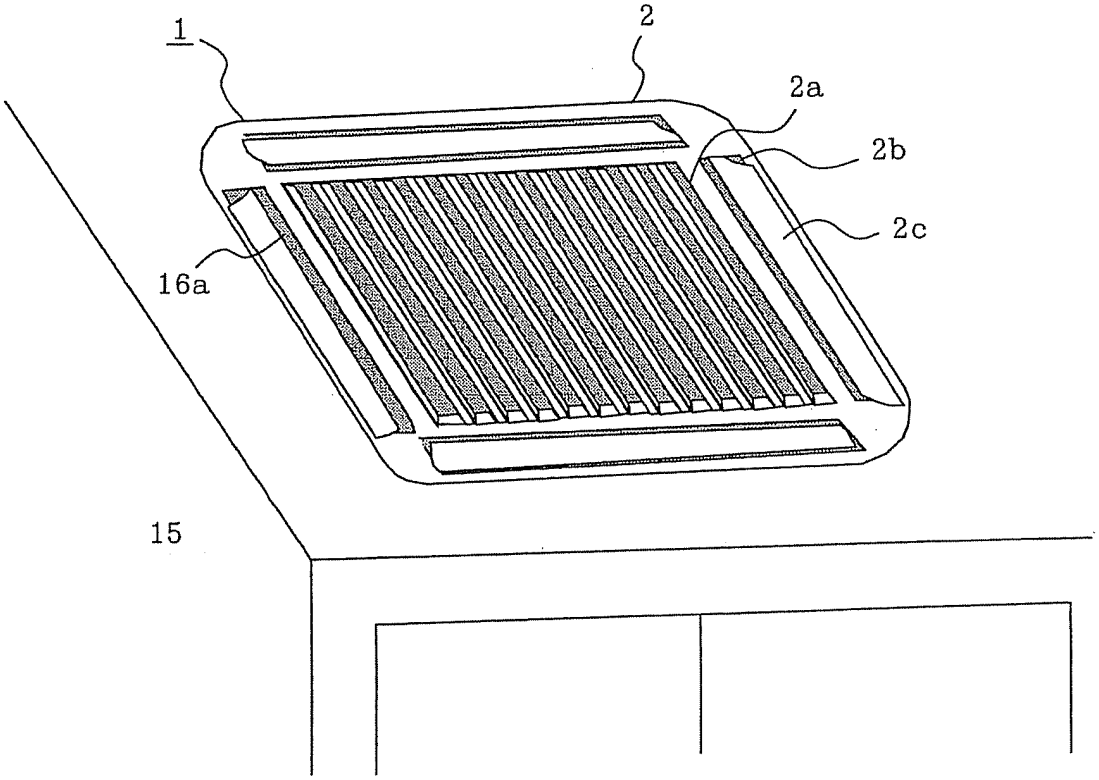
1
2
2a
2b
2c
16a
15

FIG. 2

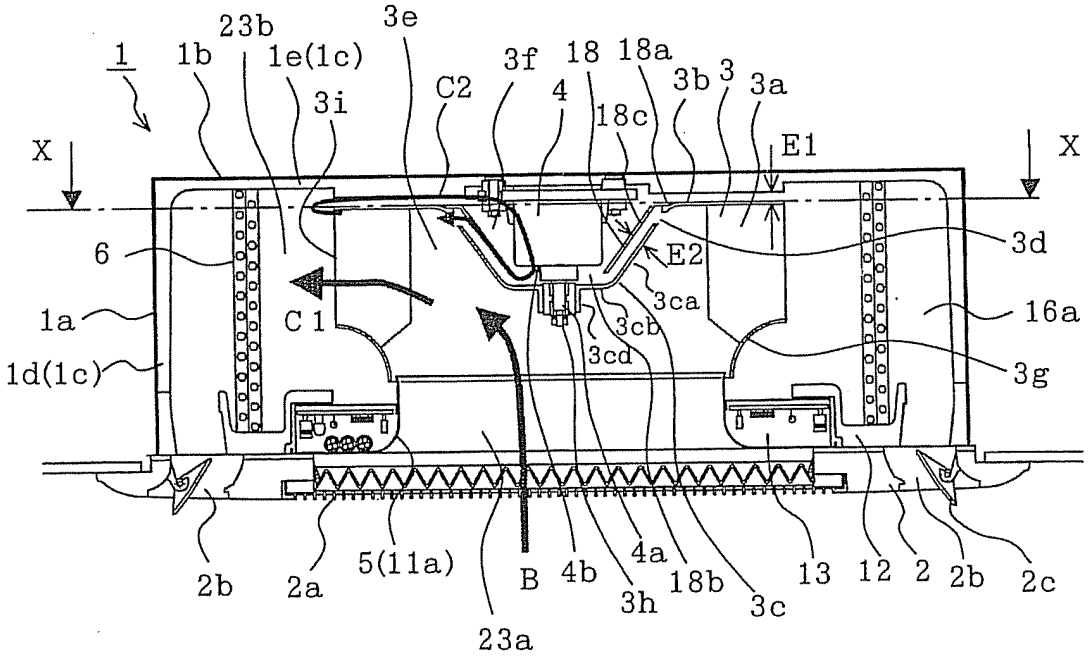
1
1b
23b
1e(1c)
3e
3f
18
18a
3b
3
3a
3i
C2
4
18c
E1
X
X
6
3d
E2
1a
C1
3ca
3cb
16a
3cd
1d(1c)
3g
2b
2a
5(11a)
B
4b
4a
3h
18b
3c
13
12
2
2b
2c
23a

FIG. 3

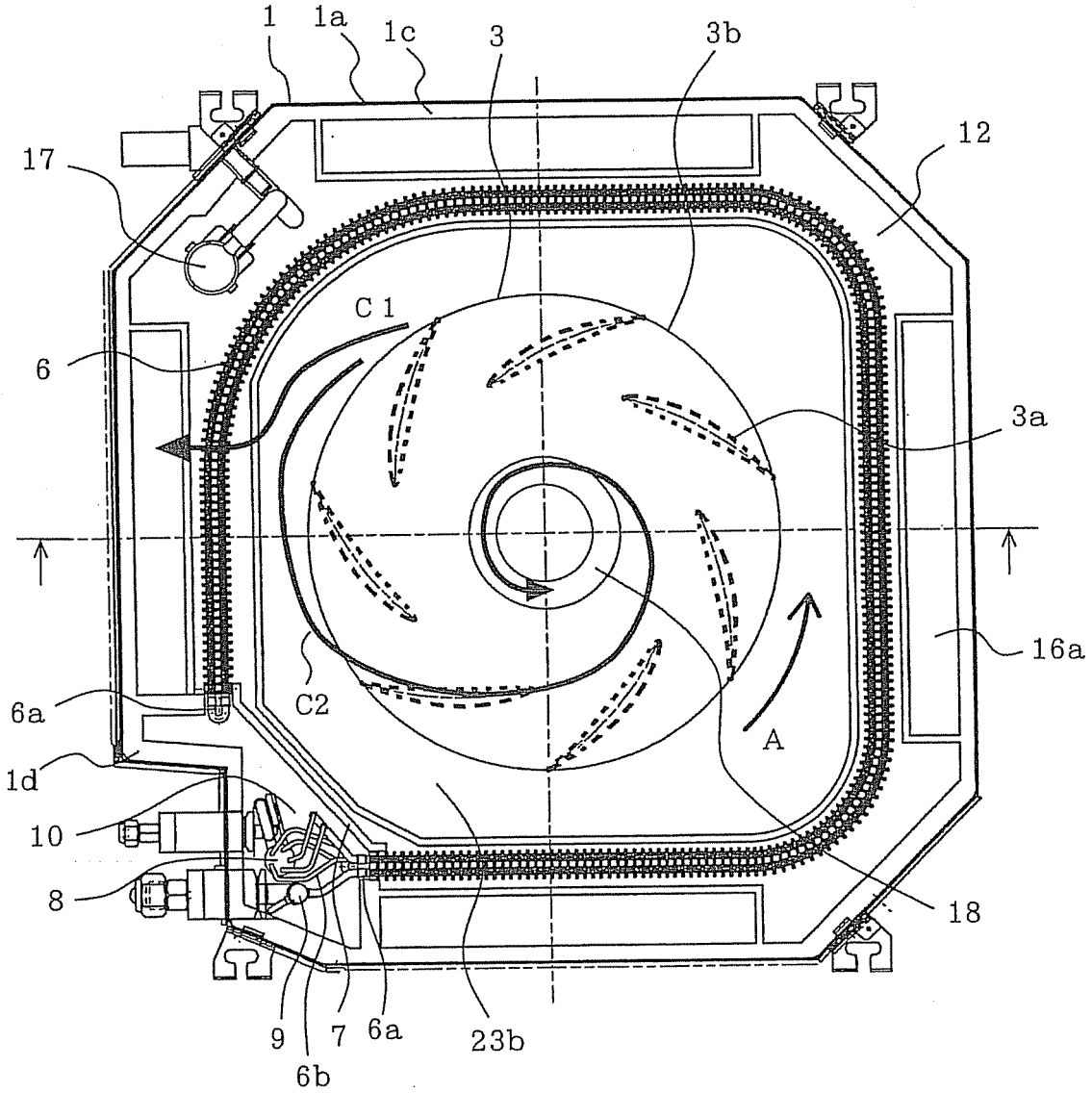

FIG. 4

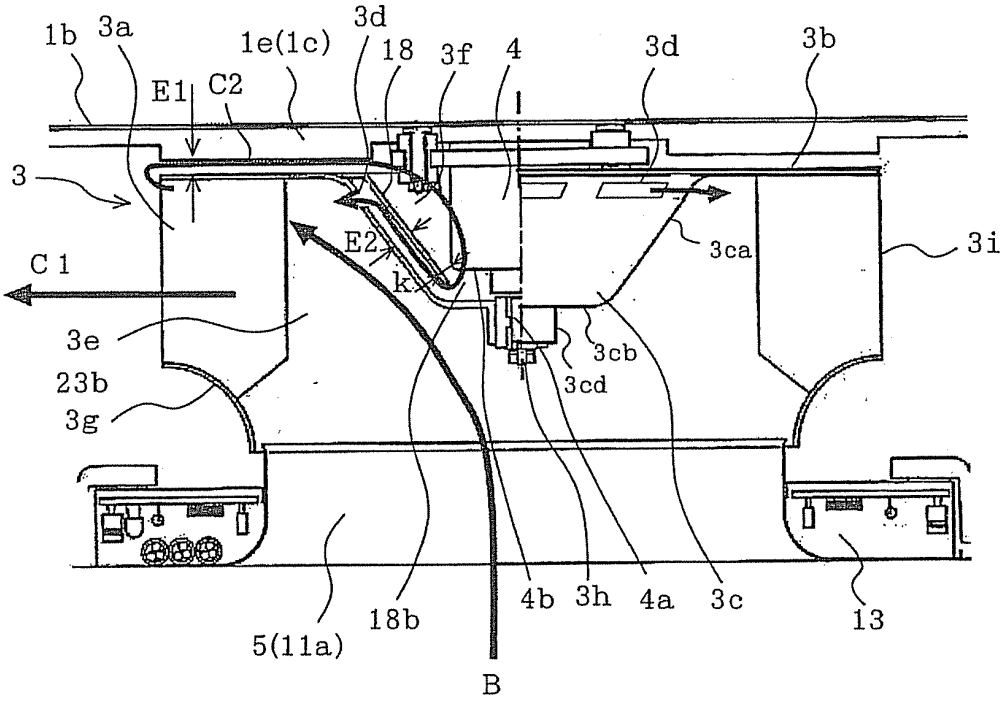
1b
3a
1e(1c)
3d
18
3f
4
3d
3b
E1
C2
3
E2
k
3ca
3i
C 1
3e
3cb
3cd
23b
3g
5(11a)
18b
4b
3h
4a
3c
13
B

FIG. 5

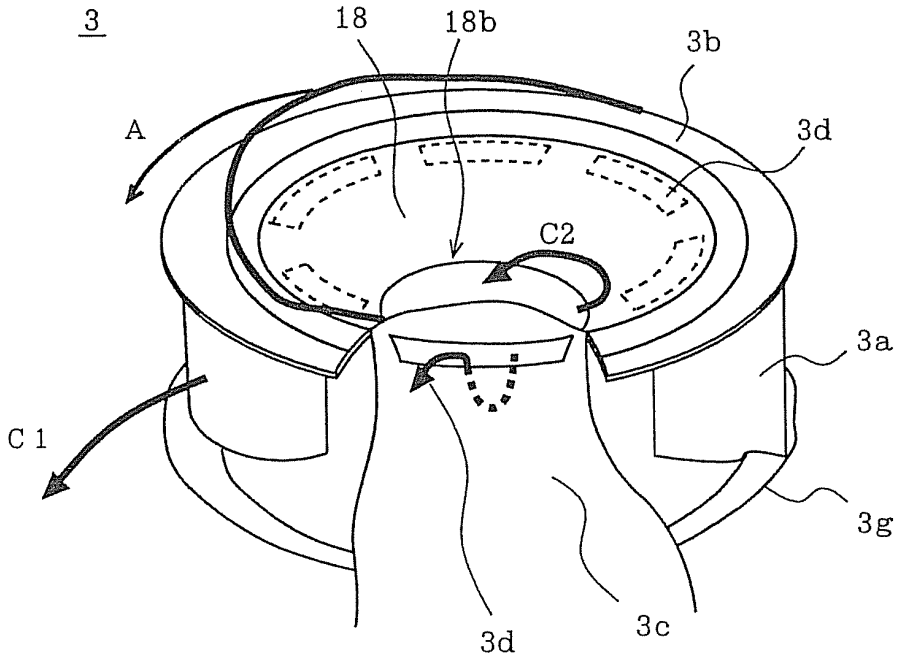
3
18
18b
3b
A
3d
C2
3a
C 1
3g
3d
3c

FIG. 6

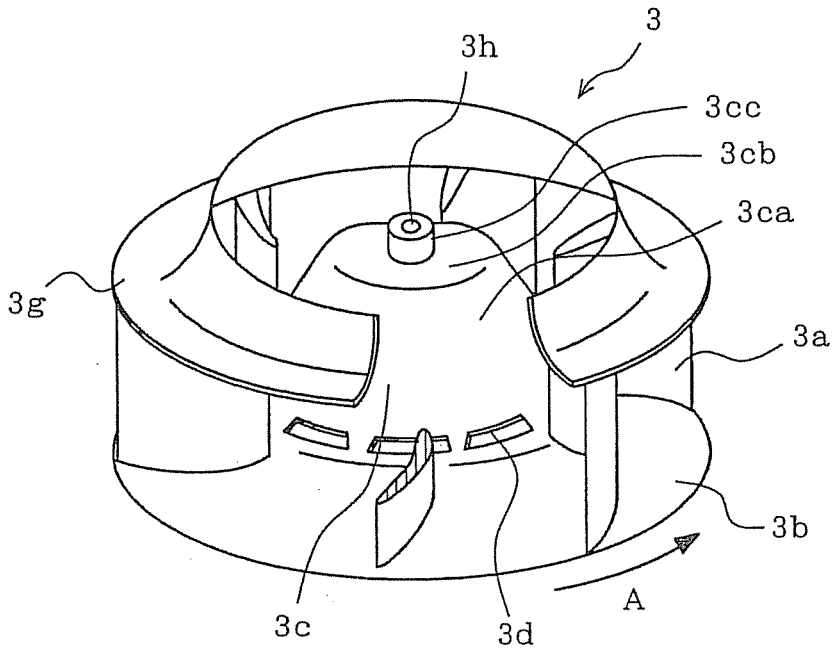

FIG. 7

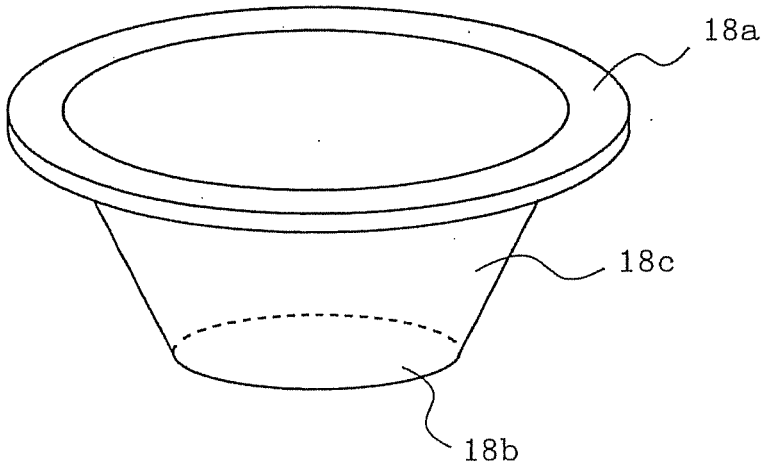

FIG. 8

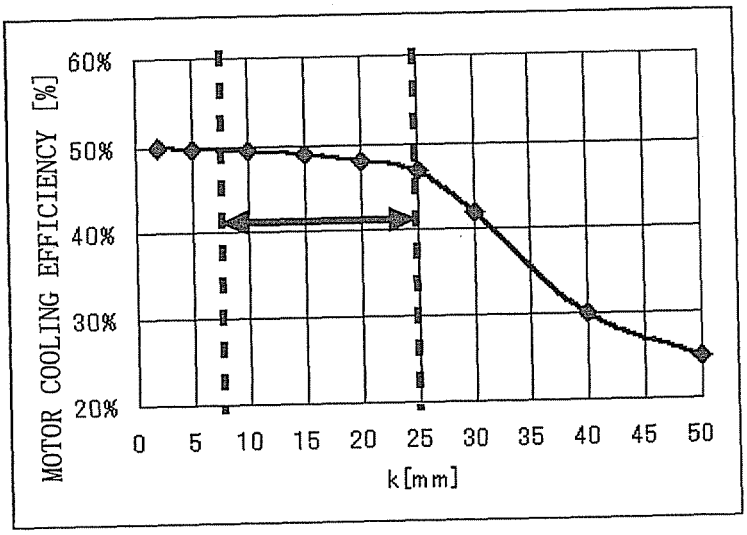
MOTOR COOLING EFFICIENCY [%]
60%
50%
40%
30%
20%
0
5
10
15
20
25
30
35
40
45
50
k[mm]

FIG. 9

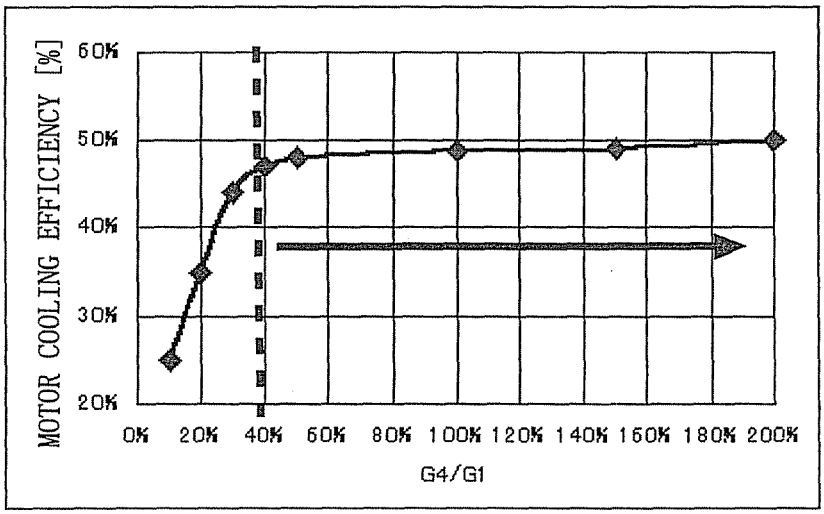
MOTOR COOLING EFFICIENCY [%]
60%
50%
40%
30%
20%
0%
20%
40%
60%
80%
100%
120%
140%
160%
180%
200%
G4/G1

FIG. 10

(a)

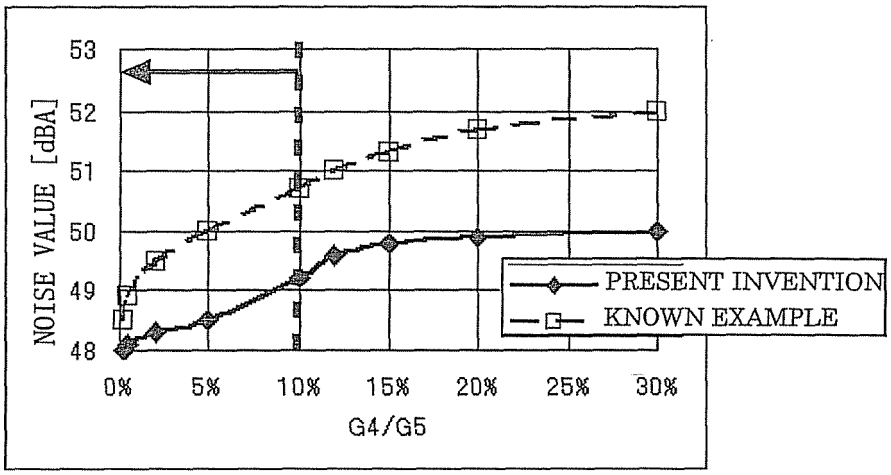
NOISE VALUE [dBA]
53
52
51
50
49
48
0%
5%
10%
15%
20%
25%
30%
G4/G5
PRESENT INVENTION
KNOWN EXAMPLE

(b)

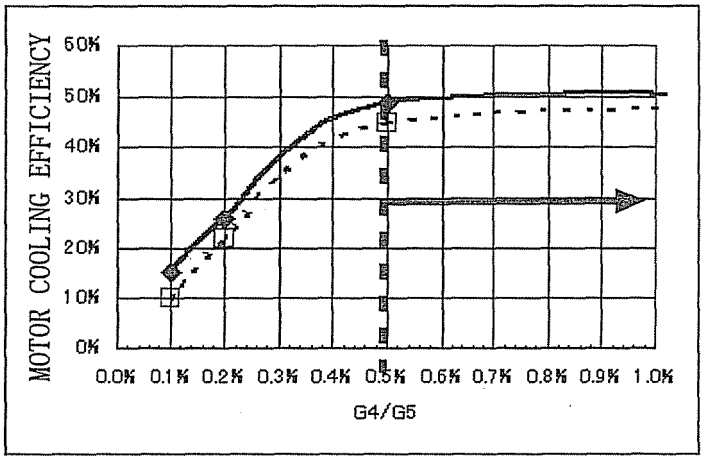
MOTOR COOLING EFFICIENCY
60%
50%
40%
30%
20%
10%
0%
0.0%
0.1%
0.2%
0.3%
0.4%
0.5%
0.6%
0.7%
0.8%
0.9%
1.0%
G4/G5

FIG. 11

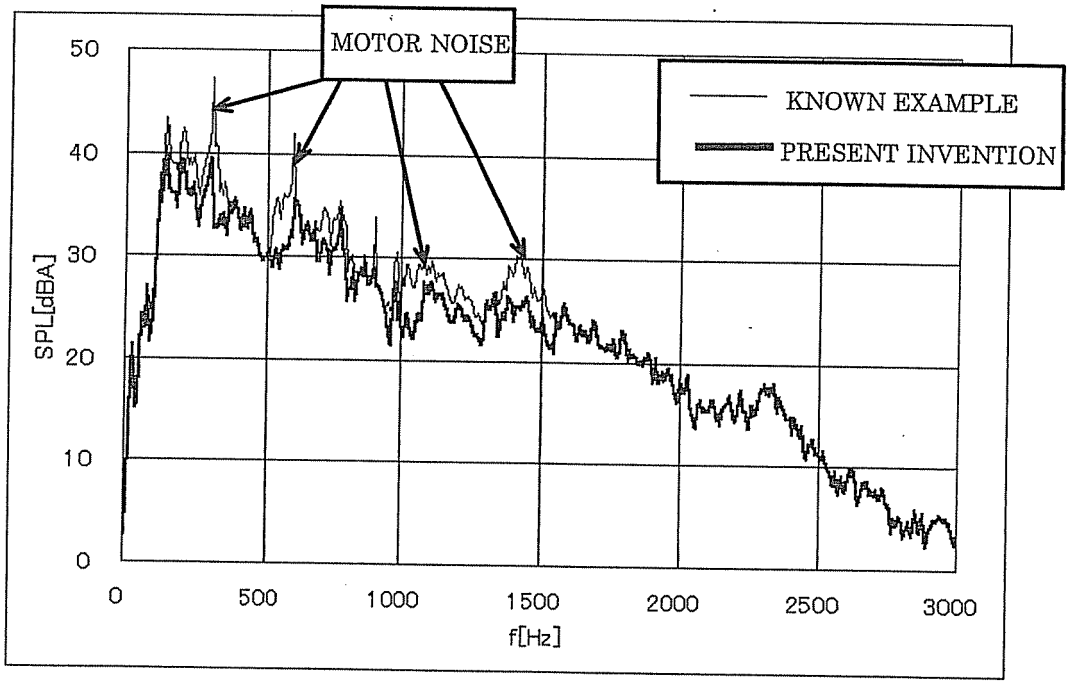
MOTOR NOISE
KNOWN EXAMPLE
PRESENT INVENTION
SPL[dBA]
50
40
30
20
10
0
0
500
1000
1500
2000
2500
3000
f[Hz]

FIG. 12

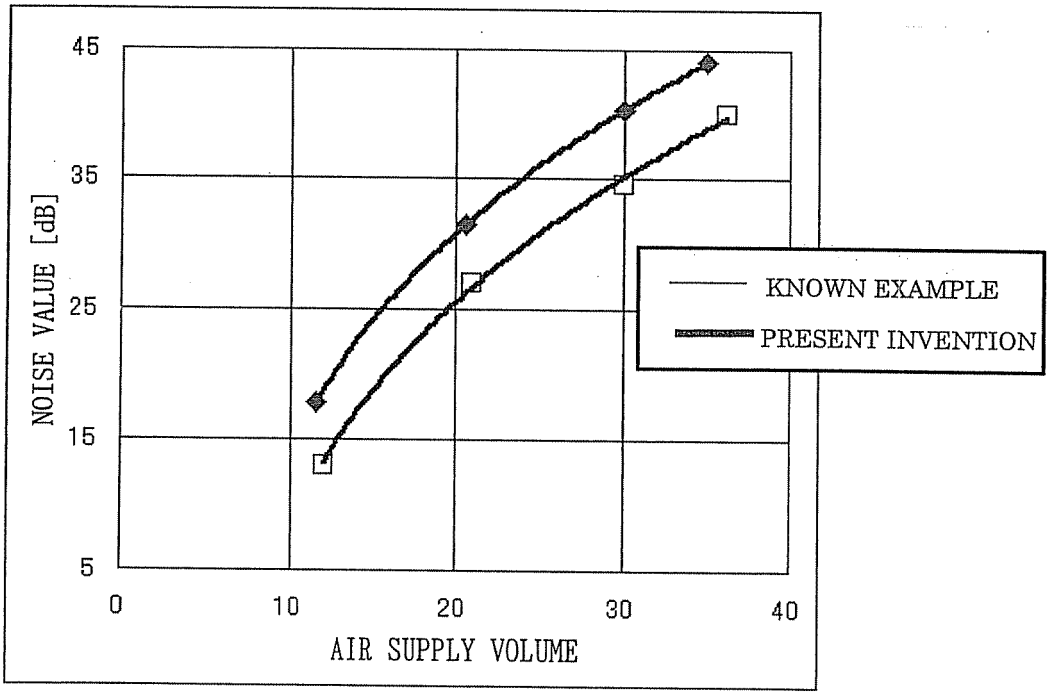
KNOWN EXAMPLE
PRESENT INVENTION
NOISE VALUE [dB]
45
35
25
15
5
0
10
20
30
40
AIR SUPPLY VOLUME

FIG. 13

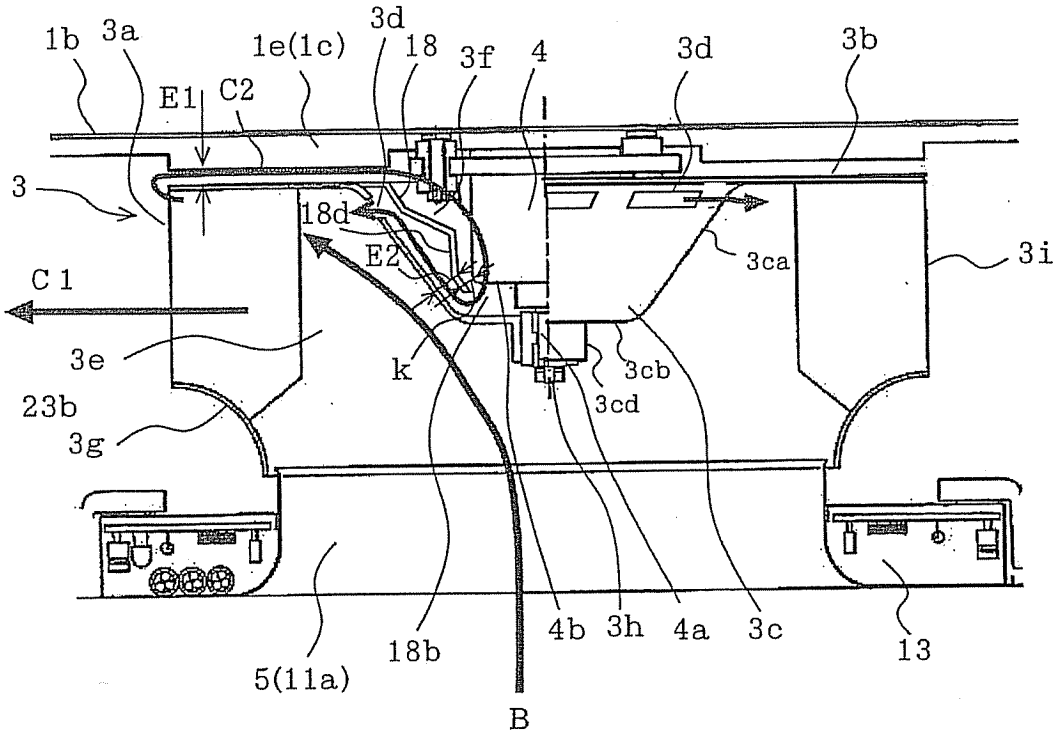
1b
3a
1e(1c)
3d
18
3f
4
3d
3b
E1
C2
3
18d
E2
3ca
3i
C 1
3e
k
3cb
3cd
23b
3g
5(11a)
18b
4b
3h
4a
3c
13
B

FIG. 14

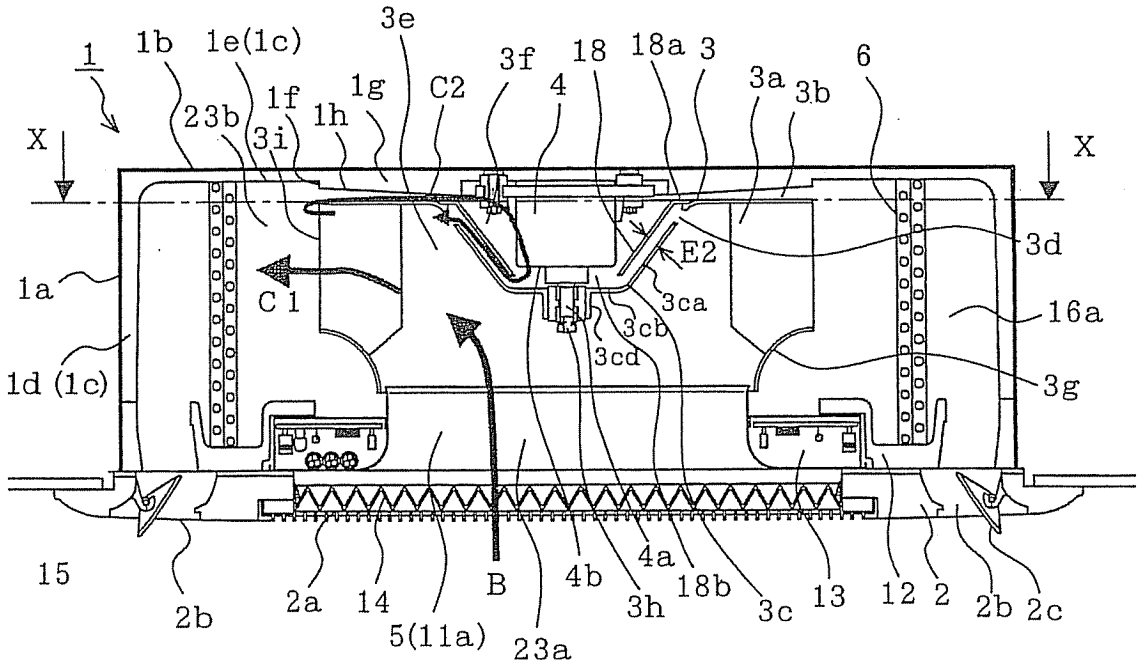
1
1b
1e(1c)
3e
3f
18
18a
3
6
23b
1f
1h
1g
C2
4
3a
3b
X
X
3i
3d
E2
1a
C 1
3ca
16a
3cb
3cd
1d (1c)
3g
15
2b
2a
14
5(11a)
B
23a
4b
3h
4a
18b
3c
13
12
2
2b
2c

FIG. 15

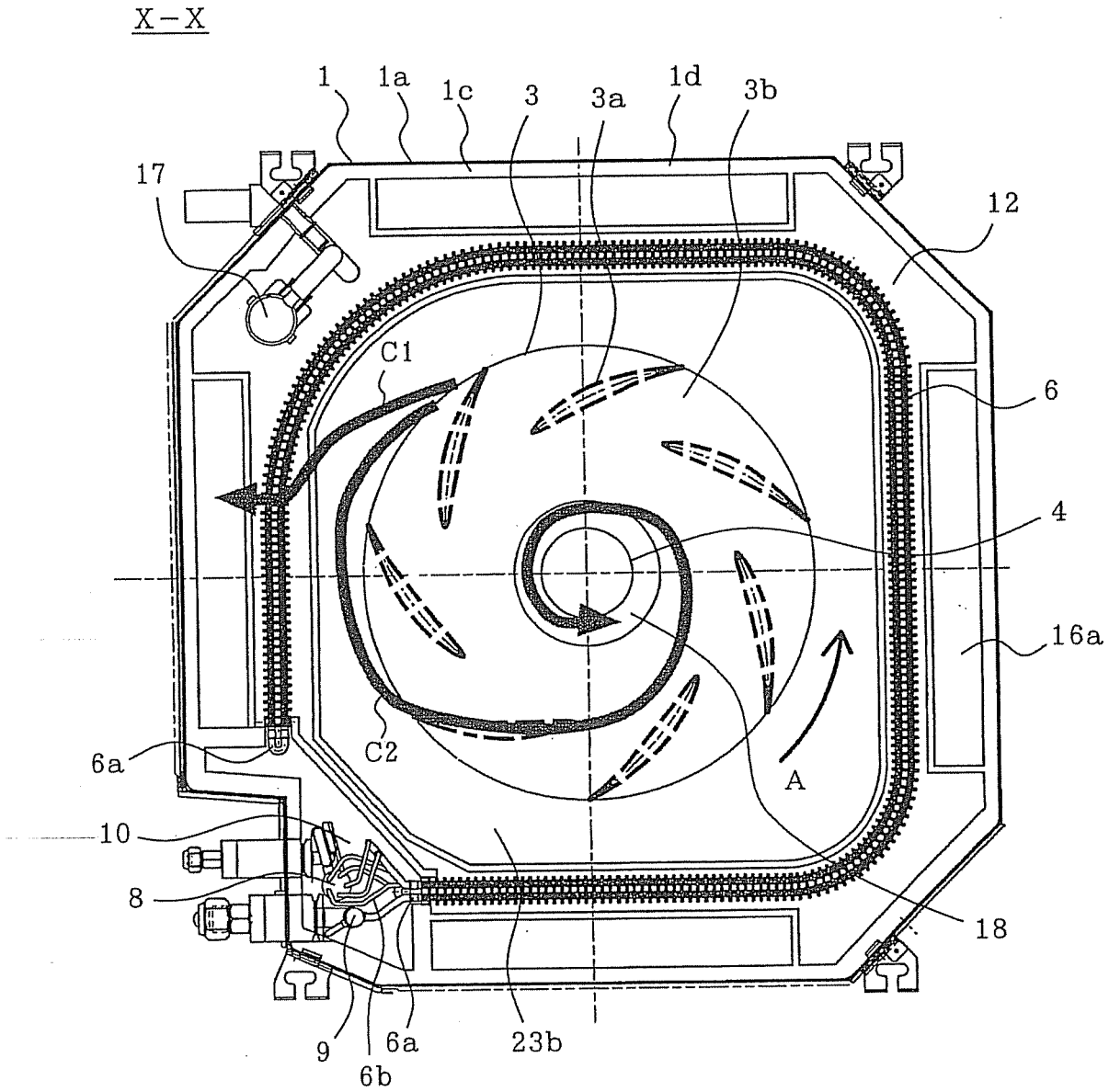

FIG. 16

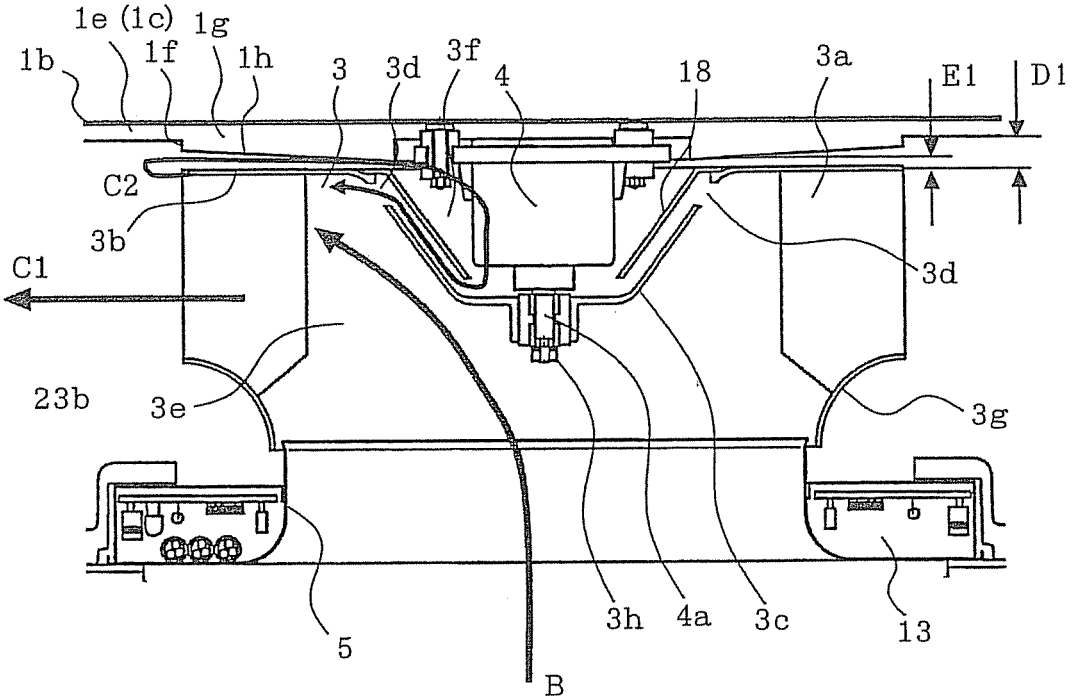
1e (1c)
1g
1b
1f
1h
3
3d
3f
4
18
3a
E1
D1
C2
3b
C1
3d
23b
3e
3g
5
3h
4a
3c
13
B

FIG. 17

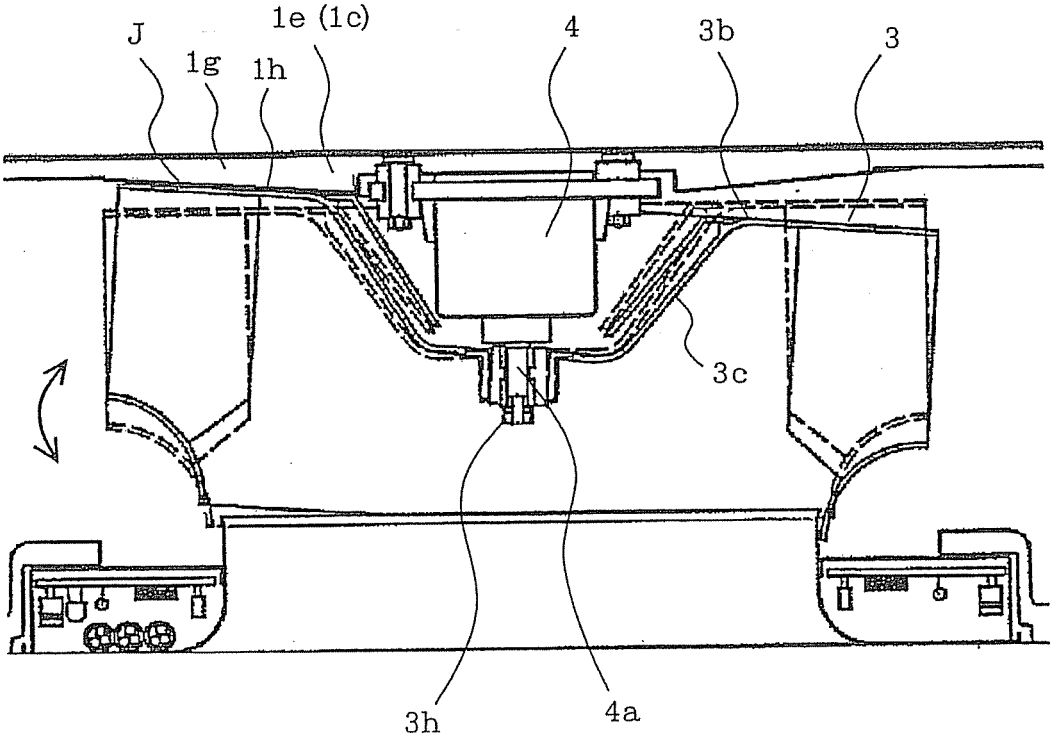
J
1e (1c)
4
3b
3
1g
1h
3c
3h
4a

FIG. 18

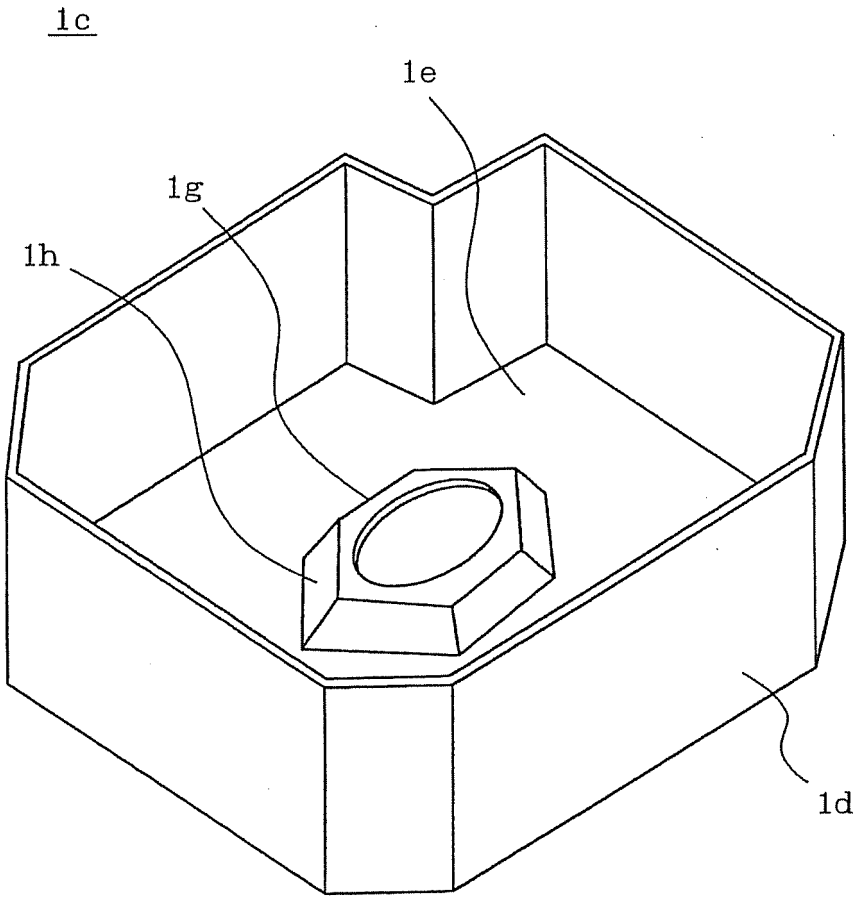

FIG. 19

(a)

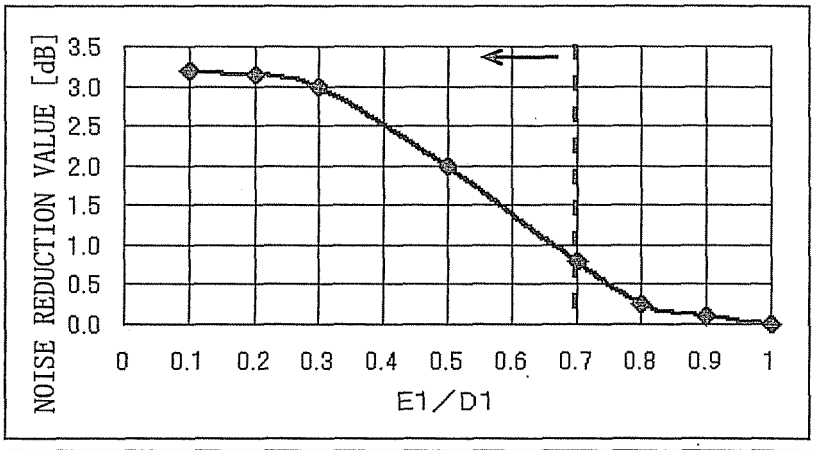
NOISE REDUCTION VALUE [dB]
3.5
3.0
2.5
2.0
1.5
1.0
0.5
0.0
0
0.1
0.2
0.3
0.4
0.5
0.6
0.7
0.8
0.9
1
E1/D1

(b)

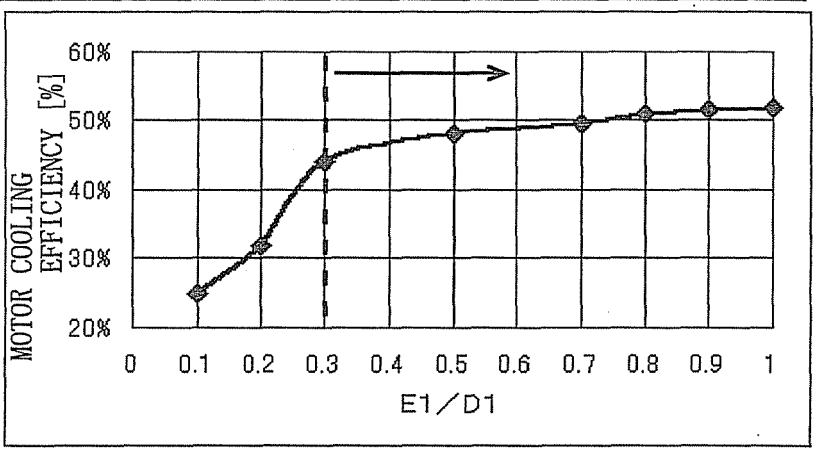
MOTOR COOLING EFFICIENCY [%]
60%
50%
40%
30%
20%
0
0.1
0.2
0.3
0.4
0.5
0.6
0.7
0.8
0.9
1
E1/D1

FIG. 20

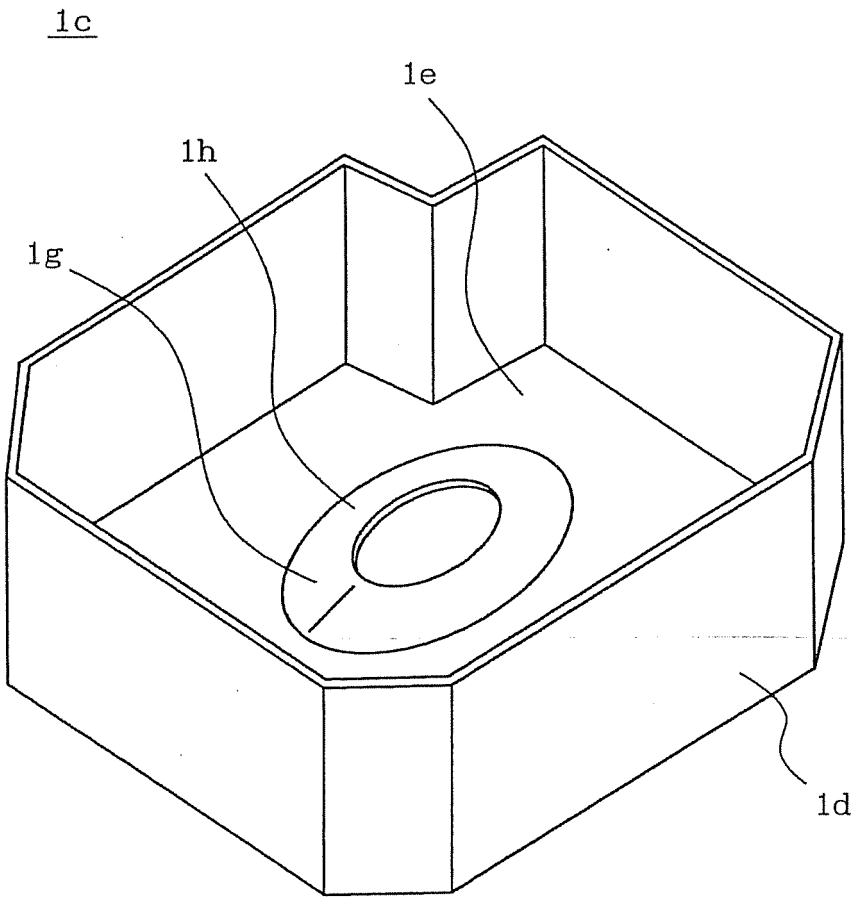

FIG. 21

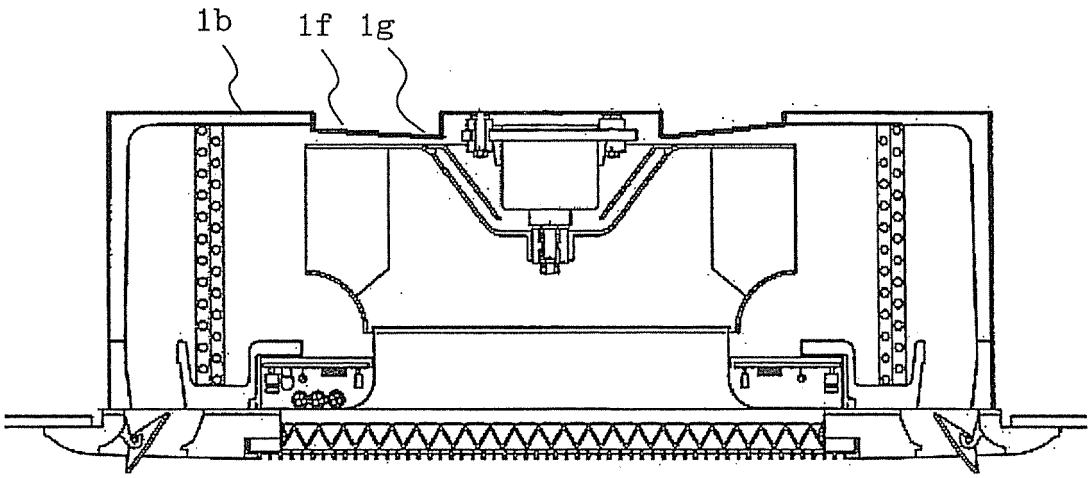

FIG. 22

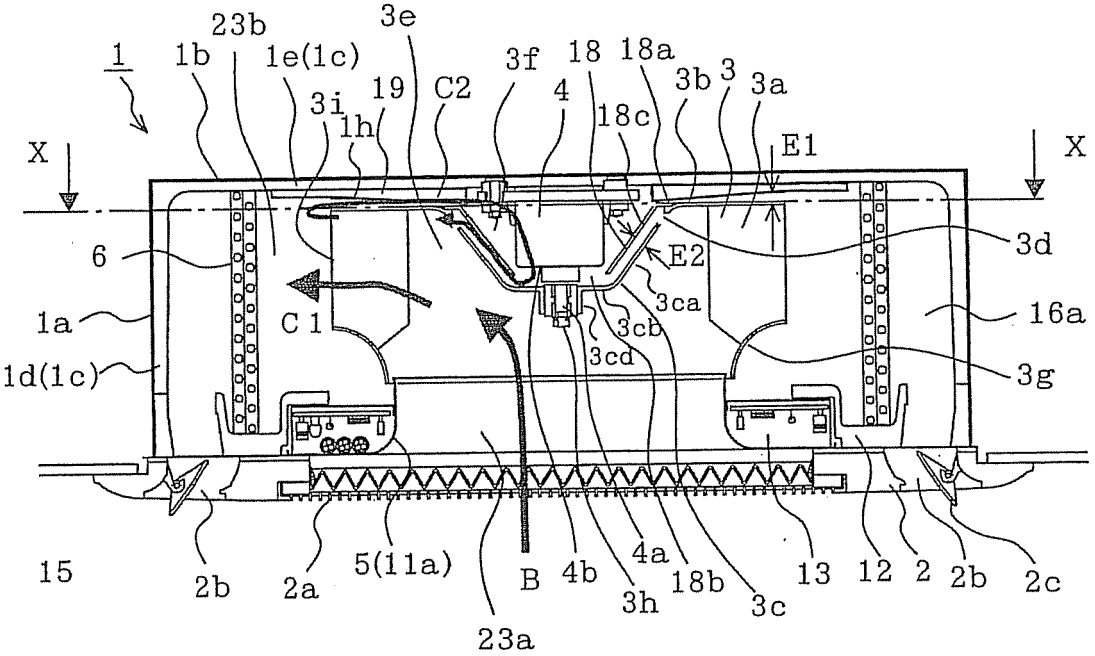
1
1b
23b
1e(1c)
3e
3f
18
18a
3b
3
3a
3i
1h
19
C2
4
18c
E1
X
X
6
3d
E2
3ca
1a
C1
3cb
16a
3cd
1d(1c)
3g
15
2b
2a
5(11a)
B
4b
4a
3h
18b
3c
13
12
2
2b
2c
23a

FIG. 23

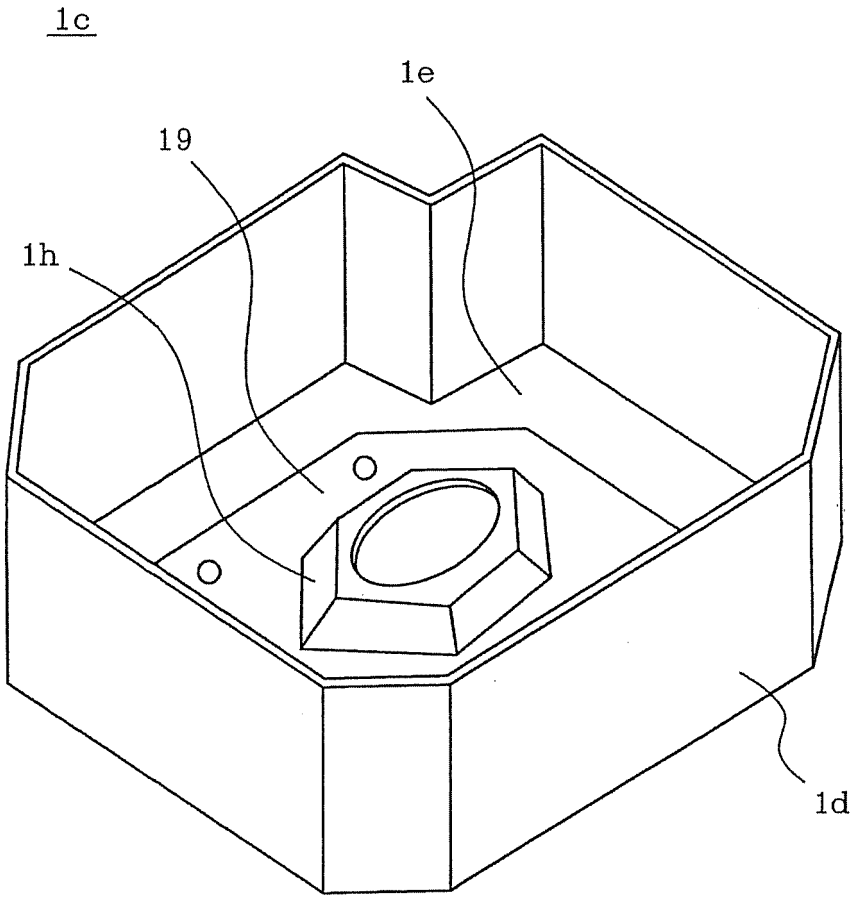

FIG. 24

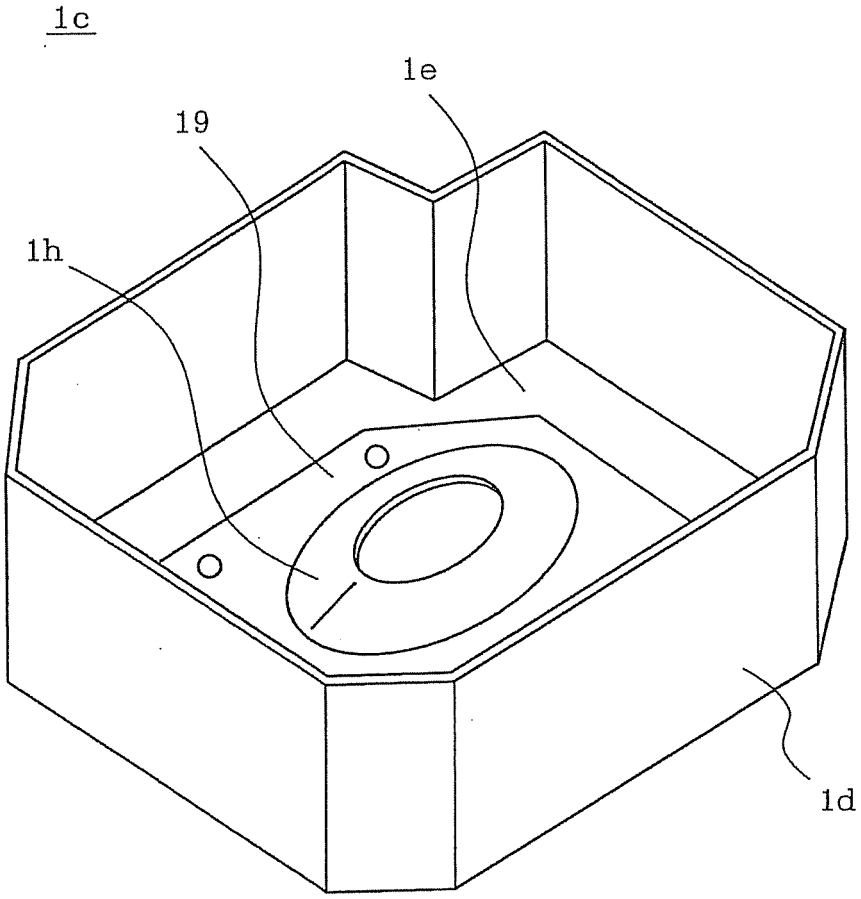

FIG. 25

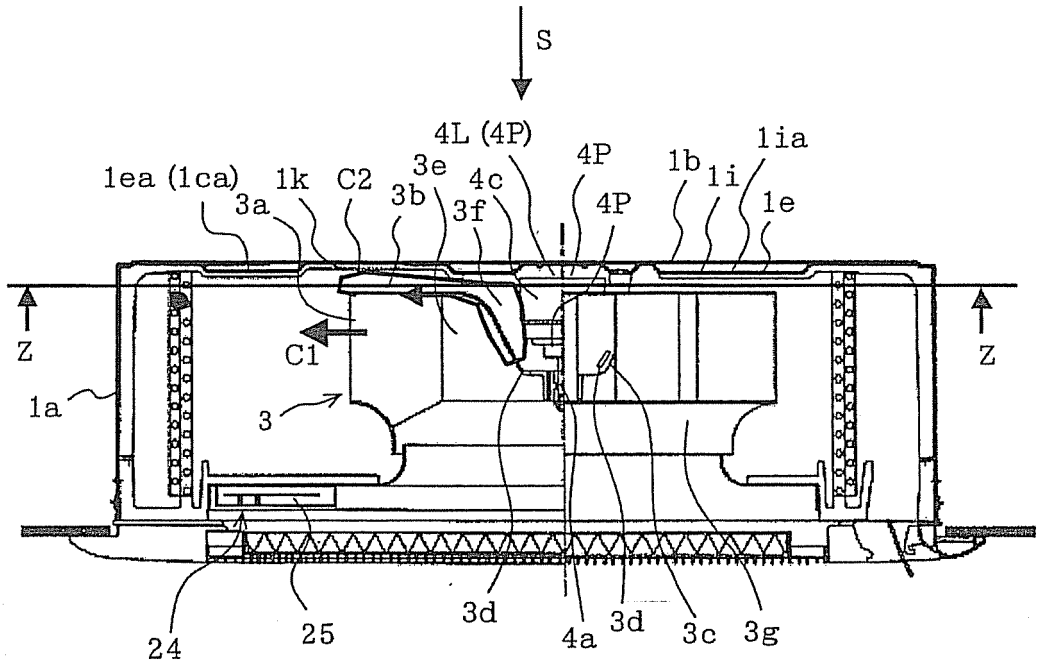
S
4L (4P)
4P
1ia
1ea (1ca)
1k
C2
3e
4c
1b
1i
3a
3b
3f
4P
1e
Z
C1
Z
1a
3
24
25
3d
4a
3d
3c
3g

FIG. 26

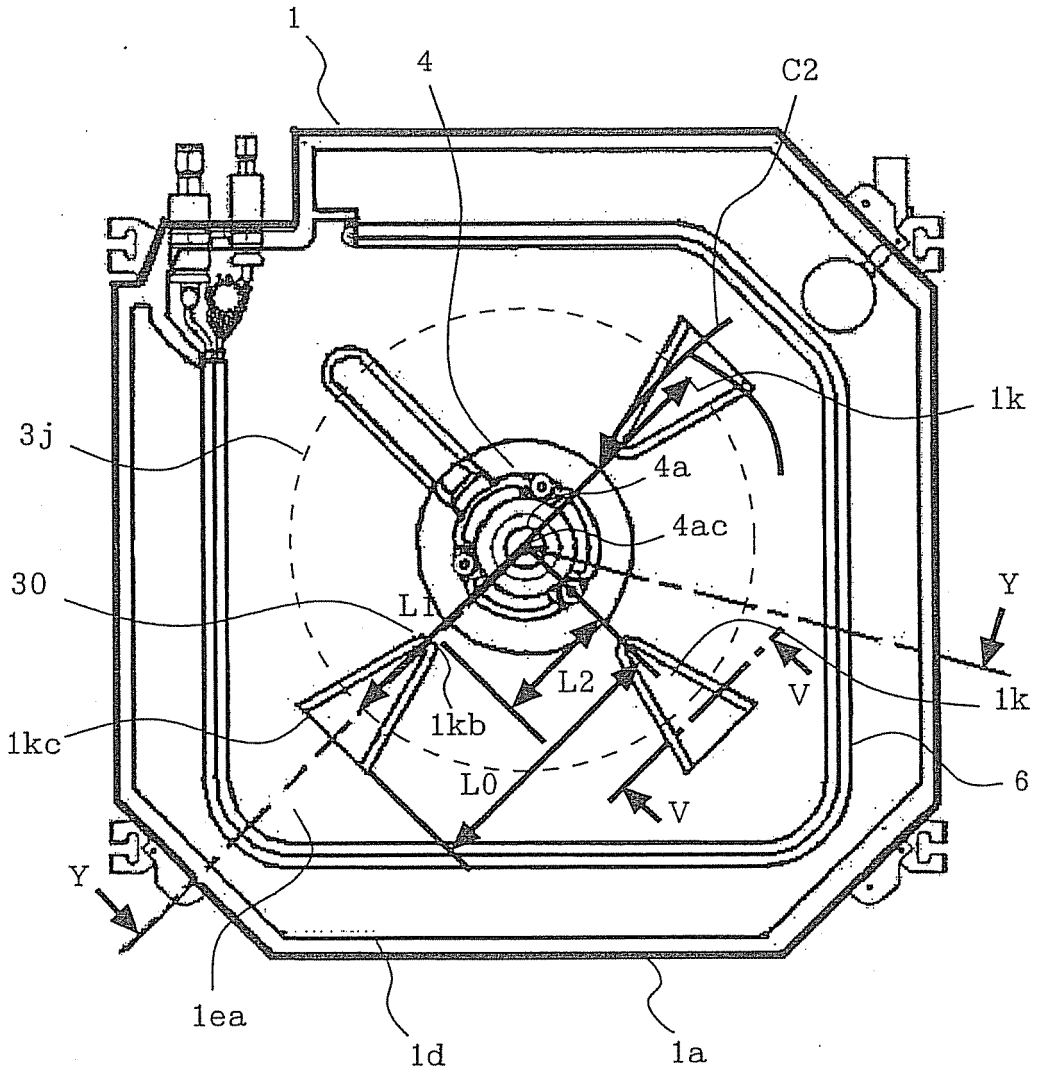

FIG. 27

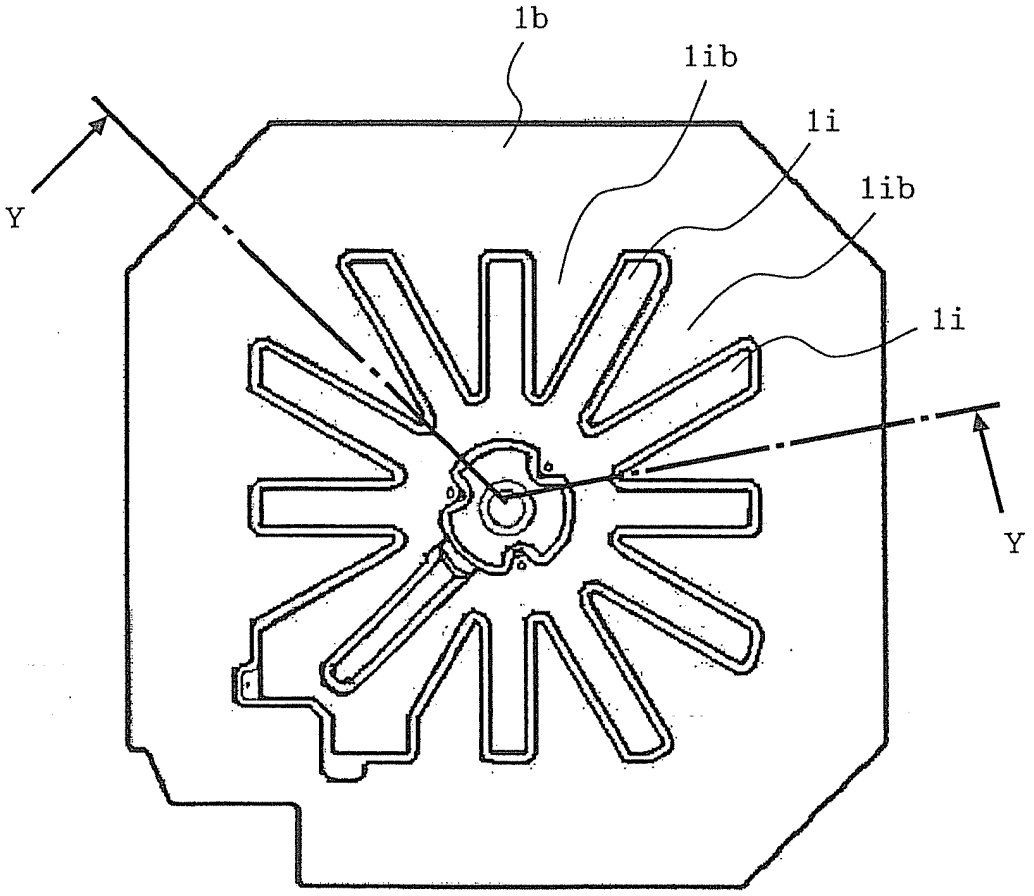
1b
1ib
1i
1ib
1i
Y
Y

FIG. 28

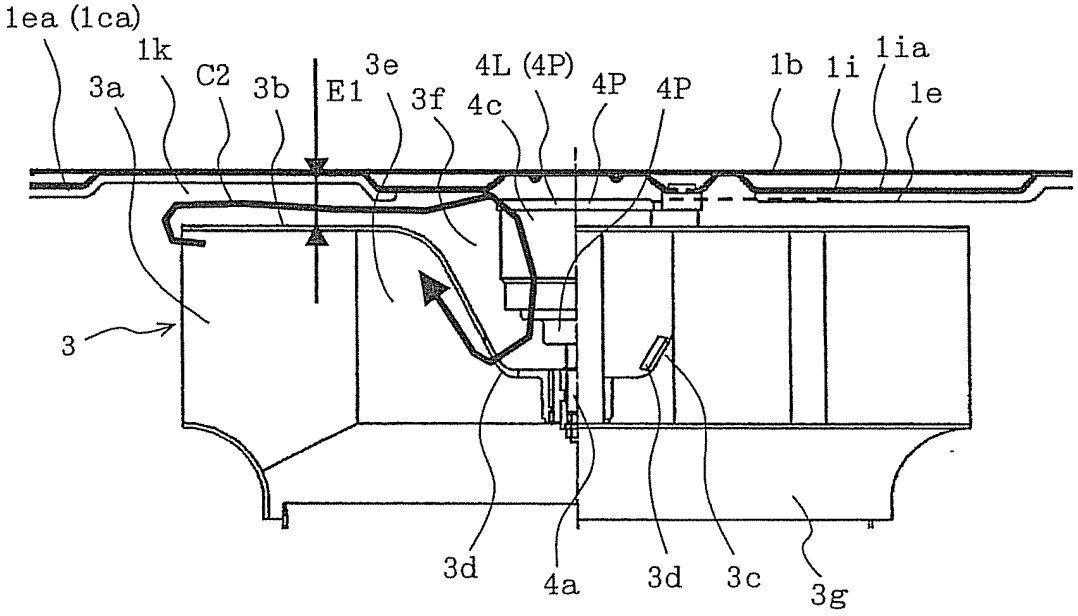
1ea (1ca)
1k
3a
C2
3b
E1
3e
3f
4c
4L (4P)
4P
4P
1b
1i
1ia
1e
3
3d
4a
3d
3c
3g

FIG. 29

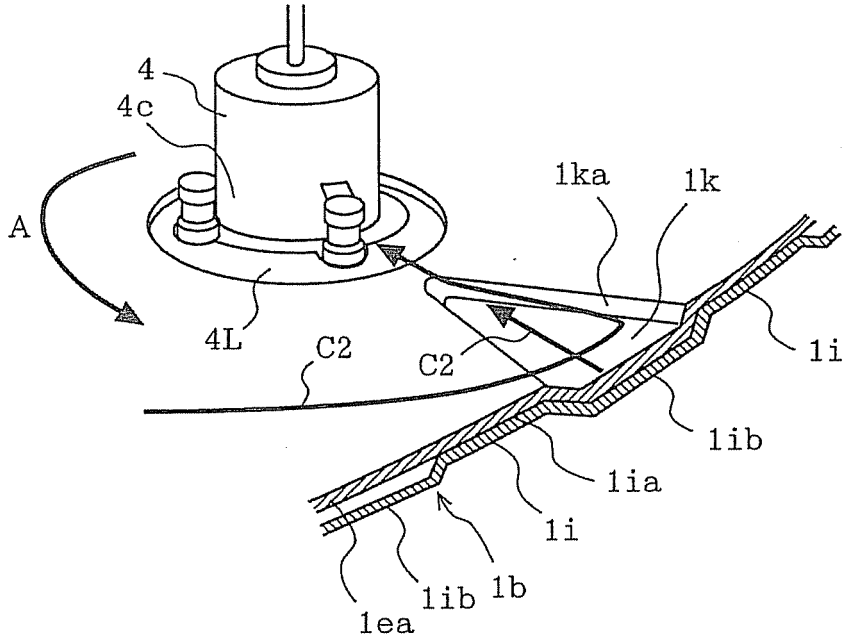
4
4c
A
1ka
1k
4L
C2
C2
1i
1ib
1ia
1i
1ib
1b
1ea

FIG. 30

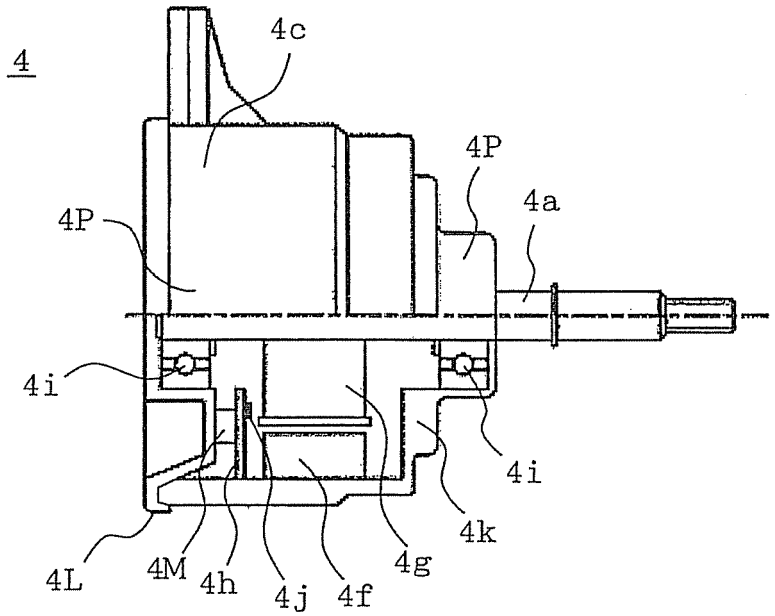
4
4c
4P
4P
4a
4i
4i
4k
4L
4M
4h
4j
4f
4g

FIG. 31

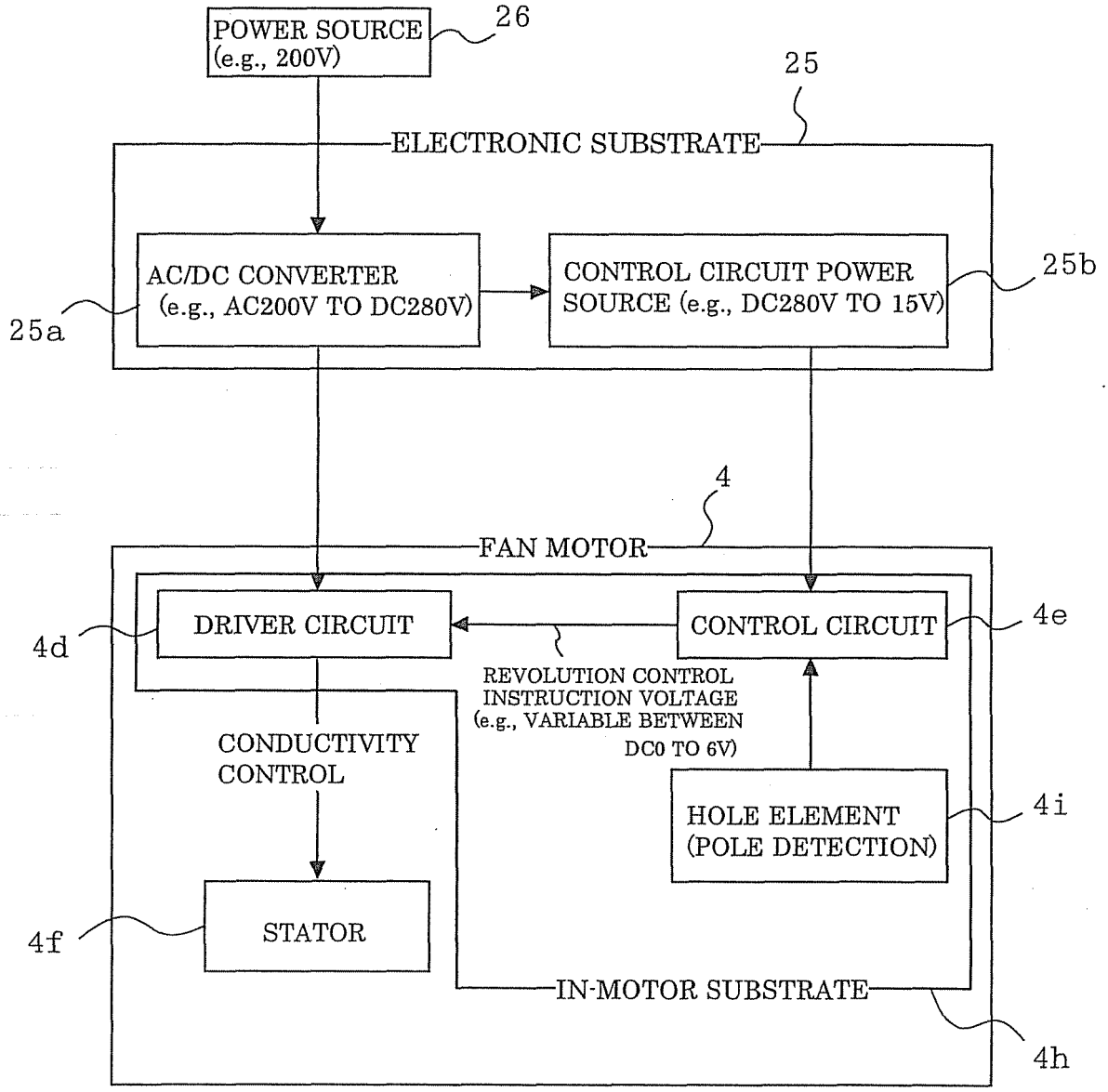
POWER SOURCE
(e.g., 200V)
26
25
ELECTRONIC SUBSTRATE
AC/DC CONVERTER
(e.g., AC200V TO DC280V)
25a
CONTROL CIRCUIT POWER
SOURCE (e.g., DC280V TO 15V)
25b
4
FAN MOTOR
DRIVER CIRCUIT
4d
CONTROL CIRCUIT
4e
REVOLUTION CONTROL
INSTRUCTION VOLTAGE
(e.g., VARIABLE BETWEEN
DC0 TO 6V)
CONDUCTIVITY
CONTROL
HOLE ELEMENT
(POLE DETECTION)
4i
STATOR
4f
IN-MOTOR SUBSTRATE
4h

FIG. 32

(a)

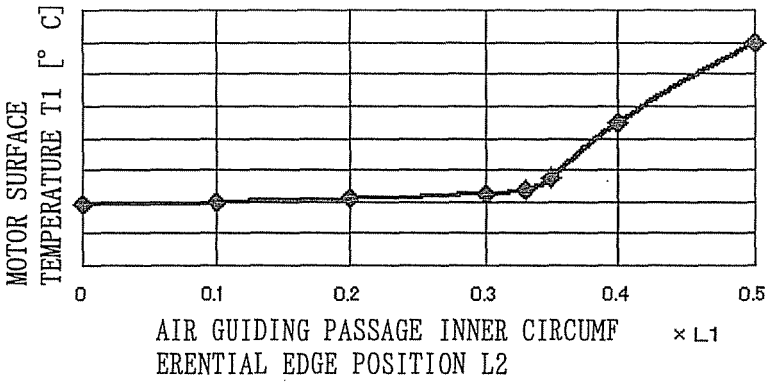
MOTOR SURFACE TEMPERATURE T1 [° C]
0
0.1
0.2
0.3
0.4
0.5
AIR GUIDING PASSAGE INNER CIRCUMFERENTIAL EDGE POSITION L2
× L1

(b)

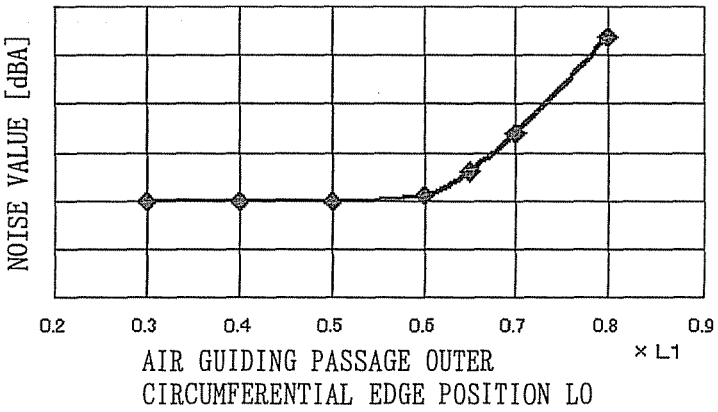
NOISE VALUE [dBA]
0.2
0.3
0.4
0.5
0.6
0.7
0.8
0.9
AIR GUIDING PASSAGE OUTER CIRCUMFERENTIAL EDGE POSITION LO
× L1

(c)

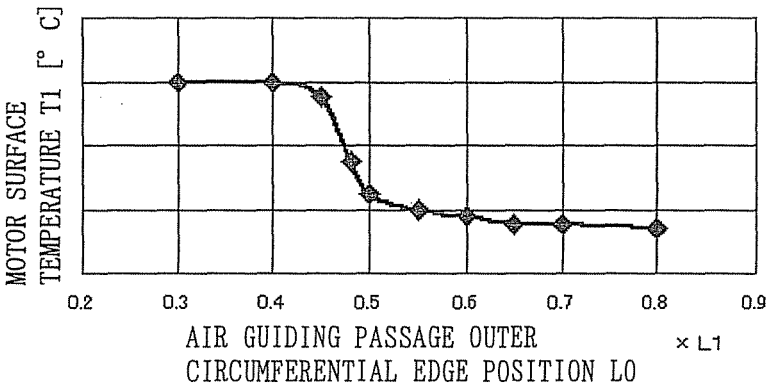
MOTOR SURFACE TEMPERATURE T1 [° C]
0.2
0.3
0.4
0.5
0.6
0.7
0.8
0.9
AIR GUIDING PASSAGE OUTER CIRCUMFERENTIAL EDGE POSITION LO
× L1

FIG. 33

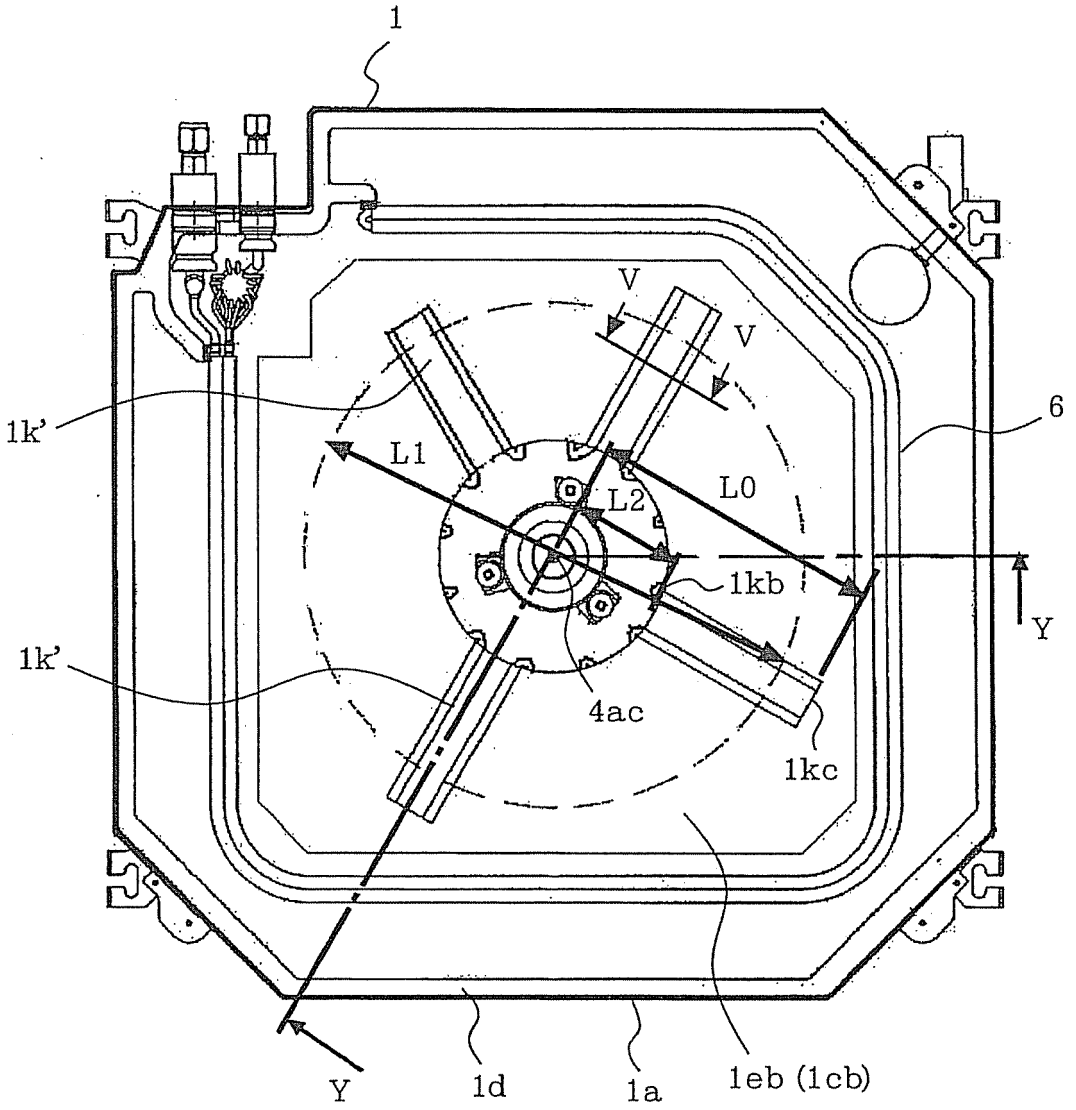

FIG. 34

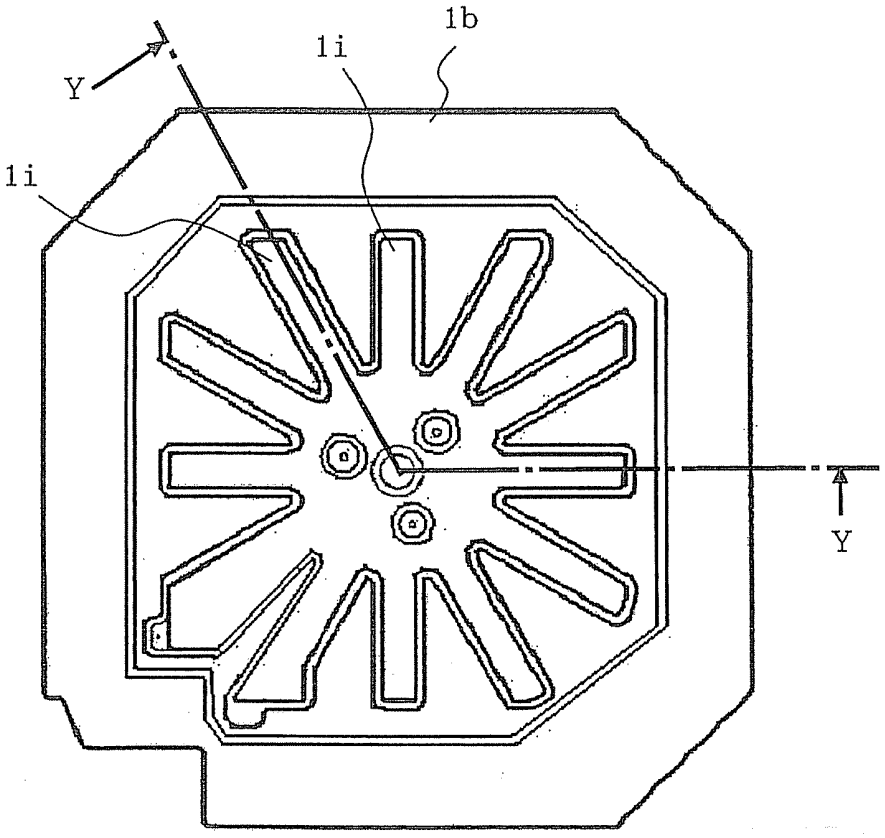

FIG. 35

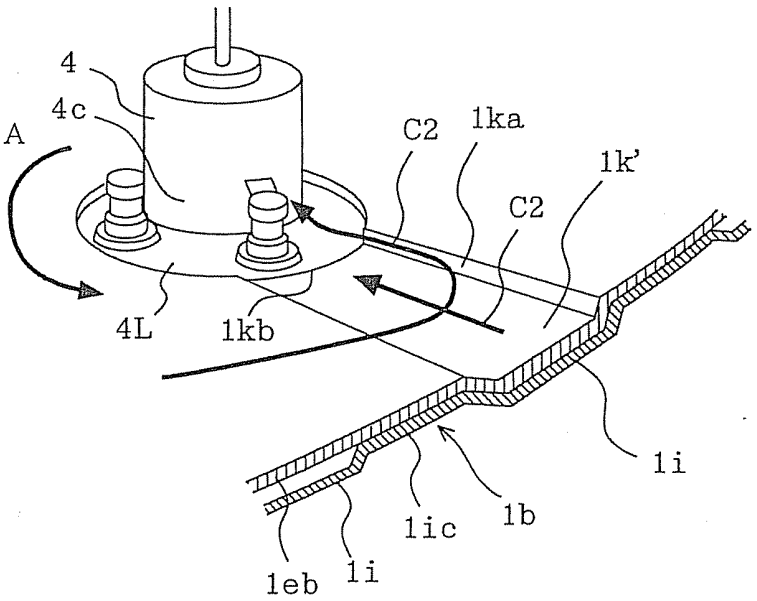

REFERENCES CITED IN THE DESCRIPTION

This list of references cited by the applicant is for the reader's convenience only. It does not form part of the European patent document. Even though great care has been taken in compiling the references, errors or omissions cannot be excluded and the EPO disclaims all liability in this regard.

Patent documents cited in the description

- JP 3270567 B **[0004]**
- JP 3275474 B **[0004]**
- US 20040244403 A1 **[0005]**