(19) Europäisches Patentamt
European Patent Office
Office européen des brevets

(11) EP 2 505 699 A1

(12) EUROPEAN PATENT APPLICATION

(43) Date of publication:
03.10.2012 Bulletin 2012/40

(51) Int Cl.:
D02J 13/00 (2006.01) *D01D 10/02* (2006.01)

(21) Application number: **12160978.8**

(22) Date of filing: **23.03.2012**

(84) Designated Contracting States:
AL AT BE BG CH CY CZ DE DK EE ES FI FR GB GR HR HU IE IS IT LI LT LU LV MC MK MT NL NO PL PT RO RS SE SI SK SM TR
Designated Extension States:
BA ME

(30) Priority: **31.03.2011 JP 2011078917**

(71) Applicant: **TMT Machinery, Inc.**
Osaka-shi, Osaka 541-0041 (JP)

(72) Inventor: **Kagata, Kakeru**
Kyoto, 612-8686 (JP)

(74) Representative: **HOFFMANN EITLE**
Patent- und Rechtsanwälte
Arabellastrasse 4
81925 München (DE)

(54) **Yarn heater**

(57) By improving the heat insulating efficiency in thermal insulation box, the power consumption of a heater for heating yarns fed from the yarn feeding roller is decreased. A roller unit 3 includes a godet roller 11, a separate roller 12, a thermal insulation box 13 housing the rollers 11 and 12, and a heat exchanger 30 provided outside the thermal insulation box 13. The heat exchanger 30 operates such that, as an exhaust fan 40 is driven, the air in the thermal insulation box 13 is exhausted through an inner tube 31. As an intake fan 41 is driven, the outside air passes through an outer tube 32 and then flows into the thermal insulation box 13 through a branched tube 34. At this stage, the heat exchanger 30 conducts heat exchange between the air running in the inner tube 31 and the air running in the outer tube 32.

FIG.2

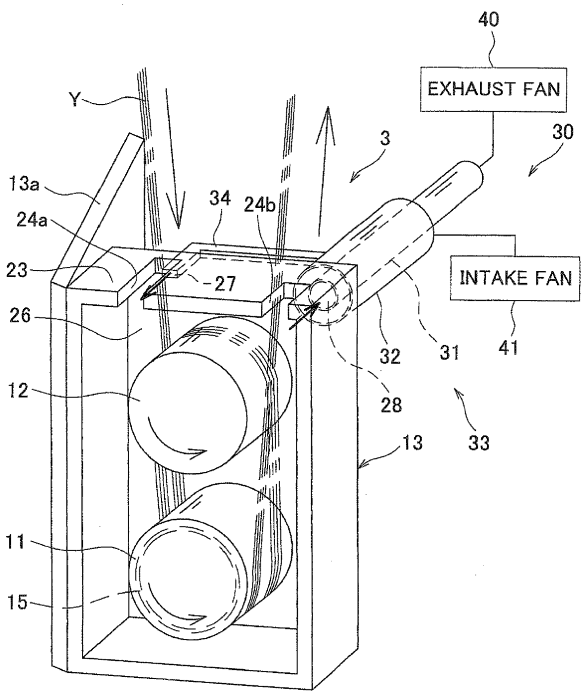

EP 2 505 699 A1

Description

BACKGROUND OF THE INVENTION

[0001] The present invention relates to a yarn heater for heating yarns.

[0002] Patent Literature 1 (Japanese Unexamined Patent Publication No. 2007-77547 (Fig. 1)) recites a spinning winder in which yarns spun out from a spinning unit are drawn by godet rollers and then wound by a winder. This spinning winder of Patent Literature 1 is provided with an oiling device that applies oil onto yarns spun out from the spinning machine and two godet rollers. The yarns spun out from the spinning machine and to which oil has been applied by the oiling device are drawn between the two godet rollers.

[0003] In the meanwhile, Patent Literature 2 (Japanese Unexamined Patent Publication No. 2001-262429 (Fig. 2)) recites that a heating roller is used as a godet roller. Such a heating roller is housed in a box (thermal insulation box) to restrain heat generated by the heating roller from escaping from the inside of the thermal insulation box.

[0004] In regard to the application of oil onto yarns as in Patent Literature 1, when as in Patent Literature 2 the godet roller is a heating roller, oil on the yarns is heated and evaporated and eventually soot is generated while the yarns spun out from the spinning unit and having oil thereon are running in the thermal insulation box, with the result that the thermal insulation box may be filled with the generated soot.

[0005] Such soot in the thermal insulation box can be exhausted with the air from the thermal insulation box, by using an exhaust fan. This is, however, disadvantageous in that the high-temperature air in the thermal insulation box is also exhausted with the soot from the thermal insulation box. Furthermore, as the air in the thermal insulation box is exhausted, the air pressure in the thermal insulation box becomes lower than the outside air pressure. This allows, for example, outside low-temperature air to enter the thermal insulation box through openings provided for taking in and out the yarns therethrough. Since the temperature in the thermal insulation box is lowered, the heater for heating the yarns to an appropriate temperature requires higher power consumption.

SUMMARY OF THE INVENTION

[0006] An object of the present invention is therefore to provide a yarn heater which consumes less power for heating yarns supplied from a yarn feeding roller thanks to improved heat insulating efficiency in the thermal insulation box.

[0007] A yarn heater of the present invention includes: a yarn feeding roller which feeds a yarn having been spun out;, a heater which heats the yarn fed from the yarn feeding roller; and a thermal insulation box which houses the yarn feeding roller and the heater therein and has a yarn inlet and a yarn outlet, the thermal insulation box further having an exhaust port which is connected to an exhaust means arranged to exhaust air from the thermal insulation box and an inflow port which allows air to flow into the thermal insulation box, and a heat exchanger being provided to perform heat exchange between the air to be exhausted through the exhaust port by the exhaust means and the air flowing into the thermal insulation box through the inflow port.

[0008] When the oil applied to the yarn running in the thermal insulation box is heated in the thermal insulation box, the heated oil is evaporated and soot is generated. To remove this soot, the soot is exhausted through the exhaust port along with the air by the exhaust means. Since the air pressure in the thermal insulation box becomes lower than the outside air pressure as the air is exhausted from the thermal insulation box, air flows into the thermal insulation box through the inflow port. In this regard, the air in the thermal insulation box is heated by the heater to a temperature higher than the temperature of the air flowing into the thermal insulation box. According to the yarn heater of the present invention, the heat exchanger carries out heat exchange between the hot air exhausted through the exhaust port and the cool air inflowing through the inflow port, with the result that heated air flows into the thermal insulation box. Since the temperature decrease in the thermal insulation box due to the exhaust of the air from the thermal insulation box by the exhaust means is restrained and the heat insulating efficiency in the thermal insulation box is improved, the power consumption of the heater required for heating the yarn to an appropriate temperature is reduced.

[0009] In addition to the above, preferably, the inflow port is connected to air supply means which forcibly supplies air into the thermal insulation box.

[0010] According to this arrangement, as the air is exhausted from the thermal insulation box by the exhaust means, the heated air is preferentially introduced into the thermal insulation box from the heat exchanger through the inflow port when the air pressure in the thermal insulation box is lowered. It is therefore possible to restrain the cool air from entering the thermal insulation box through, for example, the yarn inlet without the intervention of the heat exchanger, with the result that the heat insulating efficiency in the thermal insulation box is further improved.

[0011] In regard to the above, preferably, an amount of the air supplied into the thermal insulation box by the air supply means is equal to or larger than an amount of the air exhausted from the thermal insulation box by the exhaust means.

[0012] According to this arrangement, since the amount of the heated air flowing into the thermal insulation box by means of the air supply means is equal to or larger than the air exhausted from the thermal insulation box by the exhaust means, it is possible to further restrain the cool air from entering the thermal insulation box without the intervention of the heat exchanger, with the result

that the heat insulating efficiency in the thermal insulation box is further improved.

[0013] In addition to the above, preferably, the exhaust port and the inflow port are formed to be remote from each other.

[0014] According to this arrangement, since the exhaust of the air from the thermal insulation box and the inflow of the air into the thermal insulation box are conducted at positions remote from each other, the soot is not diffused around the exhaust port due to the air inflowing through the inflow port, and therefore the soot is efficiently exhausted from the thermal insulation box. Furthermore, the air having flown into the thermal insulation box does not immediately flow out through the exhaust port.

[0015] In regard to the above, the heat exchanger may be arranged so that the heat exchanger includes an exhaust pipe that connects the exhaust port with the exhaust means and an inflow pipe connected to the inflow port, the inflow pipe includes an outer tube externally covering the exhaust pipe and a branched tube branched from the outer tube, the outer tube is sealed at one end, and the branched tube is connected to the inflow port.

[0016] According to this arrangement, the cool air flowing in the outer tube is heated by the hot air exhausted from the thermal insulation box and flowing in the exhaust port. The air heated while flowing in the outer tube flows, from a position remote from the exhaust port, into the thermal insulation box through the branched tube.

[0017] In addition to the above, preferably, the branched tube is branched from said one end of the outer tube.

[0018] According to this arrangement, the air entering the outer tube flows in the outer tube for a long time before entering the branched tube. On this account, the heat exchange efficiency by the heat exchanger is improved and the air heated to a higher temperature flows into the thermal insulation box.

[0019] In addition to the above, preferably, the exhaust port is provided to be closer to the yarn outlet than to the yarn inlet.

[0020] As a yarn runs, airflow (accompanied flow) is generated around the yarn. For this reason, when the yarn enters the thermal insulation box through the yarn inlet, outside cool air flows into the thermal insulation box through the yarn inlet. Furthermore, when the yarn goes out from the thermal insulation box through the yarn outlet, the heated air in the thermal insulation box flows out through the yarn outlet. In this regard, since the exhaust port connected to the exhaust means is provided to be closer to the yarn inlet of the thermal insulation box than to the yarn outlet thereof, it is possible to restrain the soot from leaking out through the yarn outlet owing to the accompanied flow.

[0021] In regard to the above, preferably, the inflow port is provided to be closer to the yarn inlet than to the yarn outlet, and the yarn inlet and the inflow port are formed so that the yarn entering through the yarn inlet is orthogonal to the air inflowing through the inflow port, or formed so that the direction of the air inflowing through the inflow port is inclined toward the upstream of the yarn entering through the yarn inlet as compared to a case where the running direction of the yarn is orthogonal to the direction of the air inflowing through the inflow port.

[0022] According to this arrangement, since the air flows into the thermal insulation box through the inflow port across the yarn inlet, it is possible to prevent the accompanied flow generated by the running yarn from passing through the yarn inlet and entering the thermal insulation box. Since the entrance of outside cool air into the thermal insulation box through the yarn inlet due to the accompanied flow is restrained, the heat insulating efficiency in the thermal insulation box is further improved.

[0023] In addition to the above, preferably, the yarn feeding roller is a heating roller housing the heater.

[0024] According to this arrangement, since the yarn wound onto the yarn feeding roller is directly heated, the yarn heating efficiency is improved. Furthermore, since it is unnecessary to provide a heater in addition to the yarn feeding roller, the structure of the device is simplified.

[0025] The heat exchanger carries out heat exchange between the hot air exhausted through the exhaust port and the cool air inflowing through the inflow port, with the result that heated air flows into the thermal insulation box. Since the temperature decrease in the thermal insulation box due to the exhaust of the air from the thermal insulation box by the exhaust means is restrained and the heat insulating efficiency in the thermal insulation box is improved, the power consumption of the heater required for heating the yarn to an appropriate temperature is reduced.

BRIEF DESCRIPTION OF THE DRAWINGS

[0026]

Fig. 1 is a schematic view of a yarn producing device according to an embodiment.

Fig. 2 is a perspective view of the roller unit.

Fig. 3 is a horizontal cross section of the thermal insulation box and the heat exchanger viewed from the top.

DESCRIPTION OF THE PREFERRED EMBODIMENTS

[0027] The following will describe a preferred embodiment of the present invention. Fig. 1 is a schematic view of a yarn producing device of the present embodiment. As shown in Fig. 1, the yarn producing device 1 includes components such as a spinning machine 2, an oiling unit 6, two roller units 3 and 4 (yarn heaters), and a winder 5.

[0028] The spinning machine 2 spins out, through a spinneret 2a, yarns Y (so-called multi-filament yarns) downward. Each yarn Y is made up of a plurality of fila-

ments. The oiling unit 6 applies oil onto the yarns Y which have been spun out from the spinning machine 2 and are running. The roller units 3 and 4 draw and feed the yarns Y which have been spun out from the spinning machine 2 and to which the oil has been applied, while heating the yarns Y. The winder 5 winds, onto unillustrated bobbins, the yarns Y drawn and fed by the roller units 3 and 4.

[0029] Among the above-described components of the yarn producing device 1, the spinning machine 2 and the winder 5 will not be detailed below because they are identical with conventional ones. The following will focus on the roller units 3 and 4.

[0030] The roller units 3 and 4 are provided below the spinning machine 2. Fig. 2 is a perspective view of the roller unit. Fig. 3 is a horizontal cross section of the thermal insulation box and the heat exchanger viewed from the top. Fig. 2 shows the roller unit 3 on the upstream side in the running direction of the yarns Y, among the two roller units 3 and 4. Since the roller units 3 and 4 have similar structures, the following description will predominantly focus on the structure of the roller unit 3. As to the roller unit 4, the following will only describe differences from the roller unit 3. To clearly differentiate the descriptions on the roller unit 3 from the descriptions on the roller unit 4, each of the components of the roller unit 4 is denoted by the reference number of the same component of the roller unit 3 with a dash (e.g., godet roller 11' and separate roller 12').

[0031] As shown in Fig. 1 and Fig. 2, the roller unit 3 includes a godet roller 11, a separate roller 12, a thermal insulation box 13 housing the rollers 11 and 12 therein, and a heat exchanger 30 provided outside the thermal insulation box 13. The thermal insulation box 13 is a rectangular parallelepiped box made of a heat insulating material. The thermal insulation box 13 has an openable door 13a.

[0032] The thermal insulation box 13 houses the godet roller 11 and the separate roller 12 therein. The godet roller 11 is provided on the side opposite to the door 13a of the thermal insulation box 13 and is a drive roller cantilevered by an unillustrated frame. The godet roller 11 receives a plurality of yarns Y from the spinning machine 2. The godet roller 11 is rotated by an unillustrated drive motor so that the yarns Y wound thereon are fed downstream in the running direction of the yarns.

[0033] The separate roller 12 is provided above the godet roller 11 and is, in the same manner as the godet roller 11, a driven roller provided on the side opposite to the door 13a of the thermal insulation box 13 and cantilevered by an unillustrated frame. The yarns Y received by the godet roller 11 are wound onto the godet roller 11 and the separate roller 12 more than once and looped therebetween, while being deviated from one another at predetermined pitches so as not to overlap one another.

[0034] As the godet roller 11 rotates and the yarns Y run, the separate roller 12 on which the yarns Y is wound is rotated. The yarns Y on the godet roller 11 are supplied to the roller unit 4 which is on the downstream in the running direction.

[0035] The godet roller 11 is a heating roller having a heater 15 therein (see Fig. 2), and hence the yarns Y are heated while being wound onto and looped between the godet roller 11 and the separate roller 12. As the godet roller 11 and the separate roller 12 are housed in the thermal insulation box 13 and the door 13a is closed, heat generated by the heater 15 does not leak out from the thermal insulation box 13. It is noted that the separate roller 12 may be a drive roller and/or heating roller in the same manner as the godet roller 11.

[0036] Through an upper wall 23 of the thermal insulation box 13, two slits 24a and 24b (yarn inlet and yarn outlet) are formed on the respective sides of the rollers 11 and 12 to extend in directions substantially in parallel to the alignment directions of the yarns Y. The slit 24a is open on the door 13a side (on the side where the opening of the thermal insulation box 13 is provided) to allow the yarns Y to be inserted from the front side at the time of yarn threading onto the rollers 11 and 12. This slit 24a functions as a yarn inlet through which the yarns Y are inserted into the thermal insulation box 13 when the yarns are wound by the winder 5.

[0037] In the similar manner as the slit 24a, the slit 24b is open on the door 13a side to allow the yarns Y to be inserted from the front side at the time of yarn threading onto the rollers 11 and 12. The slit 24b functions as a yarn outlet through which the yarns Y exit from the thermal insulation box 13 when the yarns are wound by the winder 5.

[0038] The opened parts of the slits 24a and 24b are closed by the door 13a when the door 13a is closed.

[0039] Through a side wall 26 of the thermal insulation box 13 which is on the side opposite to the door 13a, an inflow port 27 and an exhaust port 28 are formed to be on the respective sides of the rollers 11 and 12 and immediately below the slits 24a and 24b. The inflow port 27 is rectangular whereas the exhaust port 28 is circular.

[0040] As shown in Fig. 2 and Fig. 3, the heat exchanger 30 includes a duplex tube 33 constituted by an inner tube 31 and an outer tube 32 externally covering the inner tube 31, and a branched tube 34 branched from the outer tube 32. Each of these tubes is made of, for example, a metal material with a high heat transfer efficiency such as cupper and aluminum. The inner tube 31 is connected to an exhaust fan 40 (exhaust means) at one end, and is connected to the exhaust port 28 at the other end. The outer tube 32 is connected to an intake fan 41 (air supply means) at one end and is sealed at the other end. The branched tube 34 is branched from the sealed one end of the outer tube 32 and is connected to the inflow port 27. The outer tube 32 and the branched tube 34 are wrapped up by an unillustrated heat insulating material. The intake fan 41 may be provided in the vicinity of a connecting portion connecting the branched tube 34 with the thermal insulation box 13 (i.e., a part indicated by dashed lines in Fig. 3).

[0041] As the exhaust fan 40 is driven, the air inside

the thermal insulation box 13 is exhausted through the inner tube 31. As the intake fan 41 is driven, the outside air passes through the outer tube 32 and then enters the thermal insulation box 13 through the branched tube 34. In this regard, in the heat exchanger 30, the air passing through the inner tube 31 and the air passing through the outer tube 32 flow in opposite directions, and heat exchange is conducted between these two sets of air flowing in the opposite directions. The heat transfer efficiency in this case is improved as compared to cases where the sets of air flow in the same direction. It is noted that an amount of air supplied into the thermal insulation box 13 by the intake fan 41 is arranged to be equal to or larger than an amount of air exhausted from the thermal insulation box 13 by the exhaust fan 40. Preferably, the amount of the supplied air is equal to the amount of the exhausted air. The amount of the air supplied by the intake fan 41 and the amount of the air exhausted by the exhaust fan 40 are arranged to desired amounts by suitably adjusting the capacity of the fan drive motor, the aperture and shape of each pipe, the degree of valve opening, or the like.

[0042] The roller unit 4 is arranged to be upside down as compared to the roller unit 3. Furthermore, the roller units 3 and 4 are different from each other in the rotation speed of the godet roller 11, as described later.

[0043] In the yarn producing device 1 arranged as described above, after the oiling unit 6 applies oil onto the yarns Y spun out from the spinning machine 2, the yarns Y enters the thermal insulation box 13 through the vicinity of an edge of the slit 24a which edge is on the side opposite to the opened part (i.e., through the vicinity of the edge far from the viewer of Fig. 1), and are then fed to the godet roller 11 of the roller unit 3.

[0044] The yarns Y fed to the godet roller 11 in the thermal insulation box 13 are wound more than once onto and looped between the godet roller 11 and the separate roller 12, and leave the godet roller 11. The yarns Y then go out from the thermal insulation box 13 through the vicinity of the opened part of the slit 24b, enters the thermal insulation box 13' through the vicinity of an edge of the slit 24a' which edge is on the side opposite to the opened part (i.e., through the vicinity of the edge far from the viewer of Fig. 1), and are fed to the godet roller 11' of the roller unit 4.

[0045] Thereafter, the yarns Y fed to the godet roller 11' in the thermal insulation box 13' are wound more than once onto and looped between the godet roller 11' and the separate roller 12', and then leave the godet roller 11', go out from the thermal insulation box 13' through the vicinity of the opened part of the slit 24b', and are fed to the winder 5.

[0046] In the arrangement above, the yarns Y run from the spinning machine 2 to the winder 5 at a speed of, for example, about 4000 to 6000m/min. In this regard, the yarns Y are fed while being heated at the position between the godet roller 11 having the heater 15 and the separate roller 12 and at the position between the godet roller 11' having the heater 15 and the separate roller 12'. Furthermore, the godet roller 11' of the roller unit 4 rotates at a higher speed than the godet roller 11 of the roller unit 3, and heated yarns Y are drawn between the godet roller 11 and the godet roller 11' by a force generated on account of the difference in the rotation speed between the rollers.

[0047] As the oil is heated in the thermal insulation box 13 along with the yarns Y, a part of the oil on the yarns Y is evaporated, and therefore soot is generated in the thermal insulation box 13. Such soot generated in the thermal insulation box 13 is exhausted through the exhaust port 28. In so doing, the high-temperature air in the thermal insulation box 13 is also exhausted with the soot. As the air in the thermal insulation box 13 is exhausted, the air pressure in the thermal insulation box 13 becomes lower than the outside air pressure. This allows, for example, outside low-temperature air to enter the thermal insulation box 13 through the slit 24a and other gaps. Eventually, the temperature inside the thermal insulation box 13 is lowered.

[0048] In this regard, the present embodiment is arranged such that the heat exchanger 30 is provided to perform heat exchange between the hot air (at 100 degrees centigrade, for example) exhausted from the thermal insulation box 13 with the soot and the external cool air

(at 30 degrees centigrade, for example) flowing into the thermal insulation box 13, and allows heated air (at 60 degrees centigrade) to flow into the thermal insulation box 13. Because of this, the temperature decrease in the thermal insulation box 13 on account of the air exhaust from the thermal insulation box 13 by the exhaust fan 40 is restrained and the heat insulating efficiency in the thermal insulation box 13 is improved, with the result that the power consumption of the heater 15 required to heat the yarns Y to an appropriate temperature is lowered.

[0049] In addition to the above, since the air is brought into the thermal insulation box 13 through the inflow port 27 by the intake fan 41, preference is given to the air heated by the heat exchanger 30 over the air flowing through the slits 24a and 24b and other gaps of the thermal insulation box 13. In this regard, since the amount of the heated air flowing into the thermal insulation box 13 by the intake fan 41 is equal to or larger than the amount of the air exhausted from the thermal insulation box 13 by the exhaust fan 40, it is possible to restrain cool air not involving the heat exchanger 30 from entering the thermal insulation box 13, with the result that the heat insulating efficiency in the thermal insulation box 13 is further improved.

[0050] In addition to the above, since the exhaust port 28 is formed immediately below the slit 24b through which the yarns Y go out from the thermal insulation box 13, it is possible to restrain the soot from leaking out through the slit 24b on account of the accompanied flow generated by the running of the yarns Y. Furthermore, since the inflow port 27 is formed immediately below the slit

24a through which the yarns Y enters the thermal insulation box 13, the inflow of the air into the thermal insulation box 13 occurs at a position remote from the exhaust port 28. This prevents the soot from being diffused around the exhaust port 28 due to the air inflowing through the inflow port 27, and therefore the soot is efficiently exhausted from the thermal insulation box 13. Furthermore, the air having flown into the thermal insulation box 13 does not immediately flow out through the exhaust port 28. Furthermore, since the branched tube 34 is branched from the side wall 26 side of the outer tube 32, the air flown into the outer tube 32 stays in the outer tube 32 for a long time before flowing into the branched tube 34. This improves the heat exchange efficiency of the heat exchanger 30, and therefore the thermal insulation box 13 receives air heated to a higher temperature.

[0051] In addition to the above, since the air flows into the thermal insulation box 13 through the inflow port 27 across the slit 24a, it is possible to prevent the accompanied flow generated by the running yarns Y from passing through the slit 24a and entering the thermal insulation box 13. Therefore the entrance of external cool air into the thermal insulation box 13 through the slit 24a due to the accompanied flow is restrained and the heat insulating efficiency in the thermal insulation box 13 is further improved. It is noted that the slit 24a and the inflow port 27 are formed so that the running direction of the yarns Y entering through the slit 24a is orthogonal to the flowing direction of the air inflowing through the inflow port 27, and are preferably formed so that the flowing direction of the air inflowing through the inflow port 27 is inclined toward the upstream of the yarns Y entering the thermal insulation box 13 through the slit 24a as compared to the case where the running direction of the yarns Y is orthogonal to the flowing direction of the inflowing air. This makes it possible to further effectively prevent the entrance of the accompanied flow.

[0052] In addition to the above, since the godet roller 11 is a heating roller housing the heater 15 therein, the yarns Y wound onto the godet roller 11 are directly heated. The efficiency in heating the yarns Y is therefore improved, and the structures of the roller units 3 and 4 are simplified because it is unnecessary to provide a heater 15 in addition to the heating godet roller 11.

[0053] Now, various modifications of the present embodiment will now be described. It is noted that the same components as in the embodiment are denoted by the same reference numerals as in the embodiment, respectively, and the description thereof will be omitted.

[0054] While in the present embodiment the rollers 11 and 12 of the roller unit 3 and the rollers 11' and 12' of the roller unit 4 are stored in different thermal insulation boxes 13 and 13', these two sets of rollers may be stored in a single thermal insulation box 113. For example, the present invention can be used for a so-called one-sided threading arrangement in which a plurality of heating rollers are provided in a staggered manner, the winding angle on each heating roller is arranged to be equal to or smaller than 360 degrees, and yarns Y run while being serially threaded on heating rollers from the upstream.

[0055] In addition to the above, while in the present embodiment the inner tube 31 of the duplex tube 33 of the heat exchanger 30 is circular in cross section, the inner tube of the heat exchanger may have any cross-sectional shape, on condition that the heat transfer area is large and the heat exchange efficiency is high.

[0056] In addition to the above, while in the present embodiment the duplex tube 33 is used as a heat exchanger, various other known heat exchangers may be used instead of the duplex tube 33. For example, the heat exchanger may be a plate-type heat exchanger in which a plurality of plates are stacked to form paths between plates and a cooling medium and a heating medium are arranged to alternately flow in the paths with respect to the directions of stacking the plates.

[0057] In addition to the above, while in the present embodiment the yarns Y are wound more than once onto and looped between the godet roller 11 and the separate roller 12, the separate roller 12 may not be provided and the yarns Y may be wound only onto the godet roller 11 more than once.

[0058] In addition to the above, in the present embodiment the inner tube 31 is connected to the exhaust fan 40, the outer tube 32 is connected to the intake fan 41, and hot air to be exhausted flows in the inner tube 31 whereas incoming cool air flows in the outer tube 32 and the branched tube 34. In this regard, alternatively, the inner tube 31 is connected to the intake fan 41, the outer tube 32 is connected to the exhaust fan 40, and hot air to be exhausted flows in the outer tube 32 and the branched tube 34 whereas incoming cool air flows in the inner tube 31.

[0059] In addition to the above, while in the present embodiment the present invention is applied to the yarn producing device 1 in which multi-filament yarns each made up of a plurality of filaments receive oil thereon, are heated, are drawn, and then are wound by the winder 5, the present invention may be applied to a yarn producing device in which mono-filament yarns receive oil thereon, are heated, are drawn, and then are wound by the winder 5. Furthermore, not limited to multi-filament yarns and mono-filament yarns, the present invention may be applied to a yarn producing device in which yarns Y are heated and drawn without receiving oil thereon and then wound by the winder 5, because impurities included in the spun-out yarns Y may be evaporated and generate soot.

[0060] Furthermore, while in the present embodiment one exhaust port 28 and one inflow port 27 are provided, the number of each of these ports may be more than one. Furthermore, the positions of the exhaust port 28 and the inflow port 27 may be different from the above. For example, an exhaust port may be formed in the vicinity of the godet roller 11 which is heated and often generates soot, in addition to the exhaust port formed immediately below the slit 24b through which the yarns Y go out.

[0061] In addition to the above, while in the present embodiment air is forcibly introduced through the inflow port 27 by the intake fan 41, one end of the outer tube 32 may not be connected to the intake fan 41 but open to the atmosphere. Also in this case, because the air is exhausted from the thermal insulation box 13 through the exhaust port 28, the air pressure inside the thermal insulation box 13 becomes lower than the outside air pressure, and hence air flows into the box through the inflow port 27 via the outer tube 32. Furthermore, one end of the outer tube 32 may be connected to a pressure source such as a pressure pump.

[0062] In addition to the above, while in the present embodiment the intake fan 41 is connected to the end of the outer tube 32, the intake fan 41 may be provided in the outer tube 32, in the branched tube 34, or at the inflow port 27.

[0063] In addition to the above, while in the present embodiment the present invention is applied to the roller unit in which the godet roller and the separate roller for drawing the yarns Y while heating the same are provided in the thermal insulation box, the present invention is not limited to this arrangement and may be applied to another type of yarn heater in which a heating roller for simply heating and feeding yarns is provided in a thermal insulation box.

Claims

1. A yarn heater comprising:

a yarn feeding roller which feeds a yarn having been spun out;
a heater which heats the yarn fed from the yarn feeding roller; and
a thermal insulation box which houses the yarn feeding roller and the heater therein and has a yarn inlet and a yarn outlet,
the thermal insulation box further having an exhaust port which is connected to an exhaust means arranged to exhaust air from the thermal insulation box and an inflow port which allows air to flow into the thermal insulation box, and
a heat exchanger being provided to perform heat exchange between the air to be exhausted through the exhaust port by the exhaust means and the air flowing into the thermal insulation box through the inflow port.

2. The yarn heater according to claim 1, wherein,
the inflow port is connected to air supply means which forcibly supplies air into the thermal insulation box.

3. The yarn heater according to claim 2, wherein,
an amount of the air supplied into the thermal insulation box by the air supply means is equal to or larger than an amount of the air exhausted from the thermal insulation box by the exhaust means.

4. The yarn heater according to any one of claims 1 to 3, wherein,
the exhaust port and the inflow port are formed to be remote from each other.

5. The yarn heater according to claim 4, wherein,
the heat exchanger includes an exhaust pipe that connects the exhaust port with the exhaust means and an inflow pipe connected to the inflow port,
the inflow pipe includes an outer tube externally covering the exhaust pipe and a branched tube branched from the outer tube,
the outer tube is sealed at one end, and
the branched tube is connected to the inflow port.

6. The yarn heater according to claim 5, wherein,
the branched tube is branched from said one end of the outer tube.

7. The yarn heater according to any one of claims 4 to 6, wherein,
the exhaust port is provided to be closer to the yarn outlet than to the yarn inlet.

8. The yarn heater according to claim 7, wherein,
the inflow port is provided to be closer to the yarn inlet than to the yarn outlet,
the yarn inlet and the inflow port are formed so that a running direction of the yarn entering through the yarn inlet is orthogonal to a flowing direction of the air inflowing through the inflow port, or formed so that the flowing direction of the air inflowing through the inflow port is inclined toward the upstream of the yarn entering through the yarn inlet as compared to a case where the running direction of the yarn is orthogonal to the flowing direction of the air inflowing through the inflow port.

9. The yarn heater according to any one of claims 1 to 8, wherein,
the yarn feeding roller is a heating roller housing the heater.

FIG.1

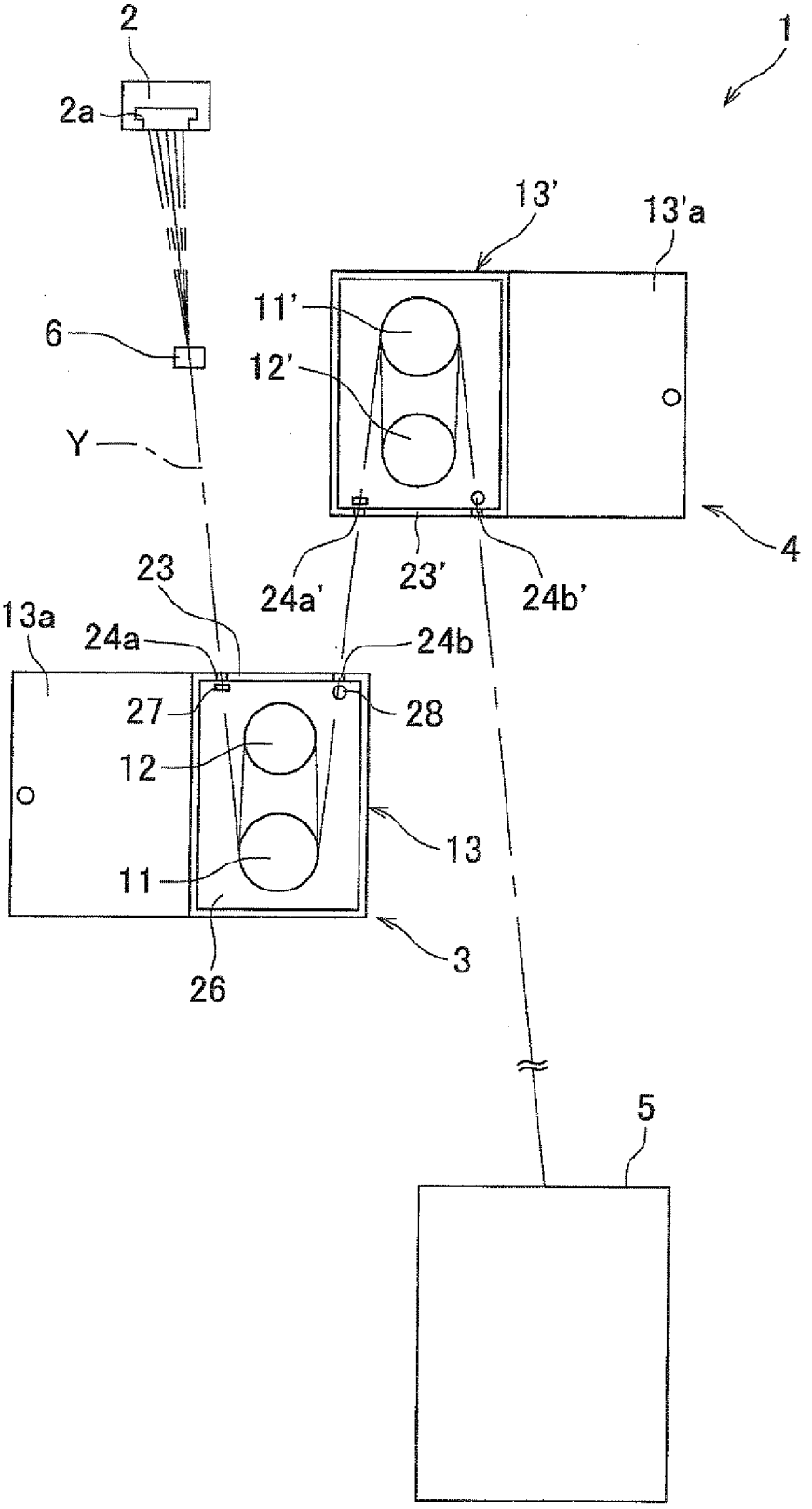

FIG.2

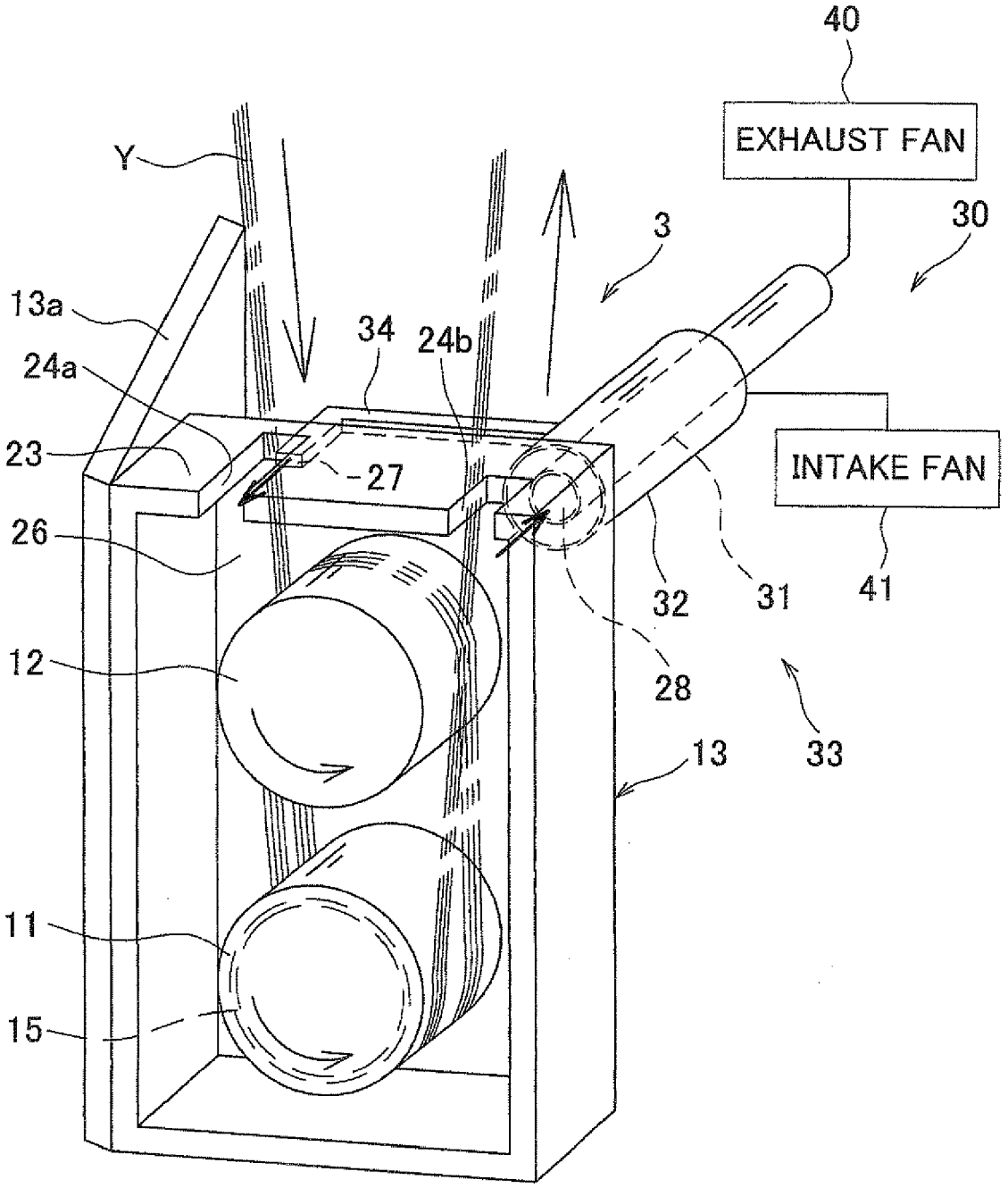
40
EXHAUST FAN
Y
3
30
13a
34
24b
24a
23
27
INTAKE FAN
26
32
31
41
12
28
33
13
11
15

FIG.3

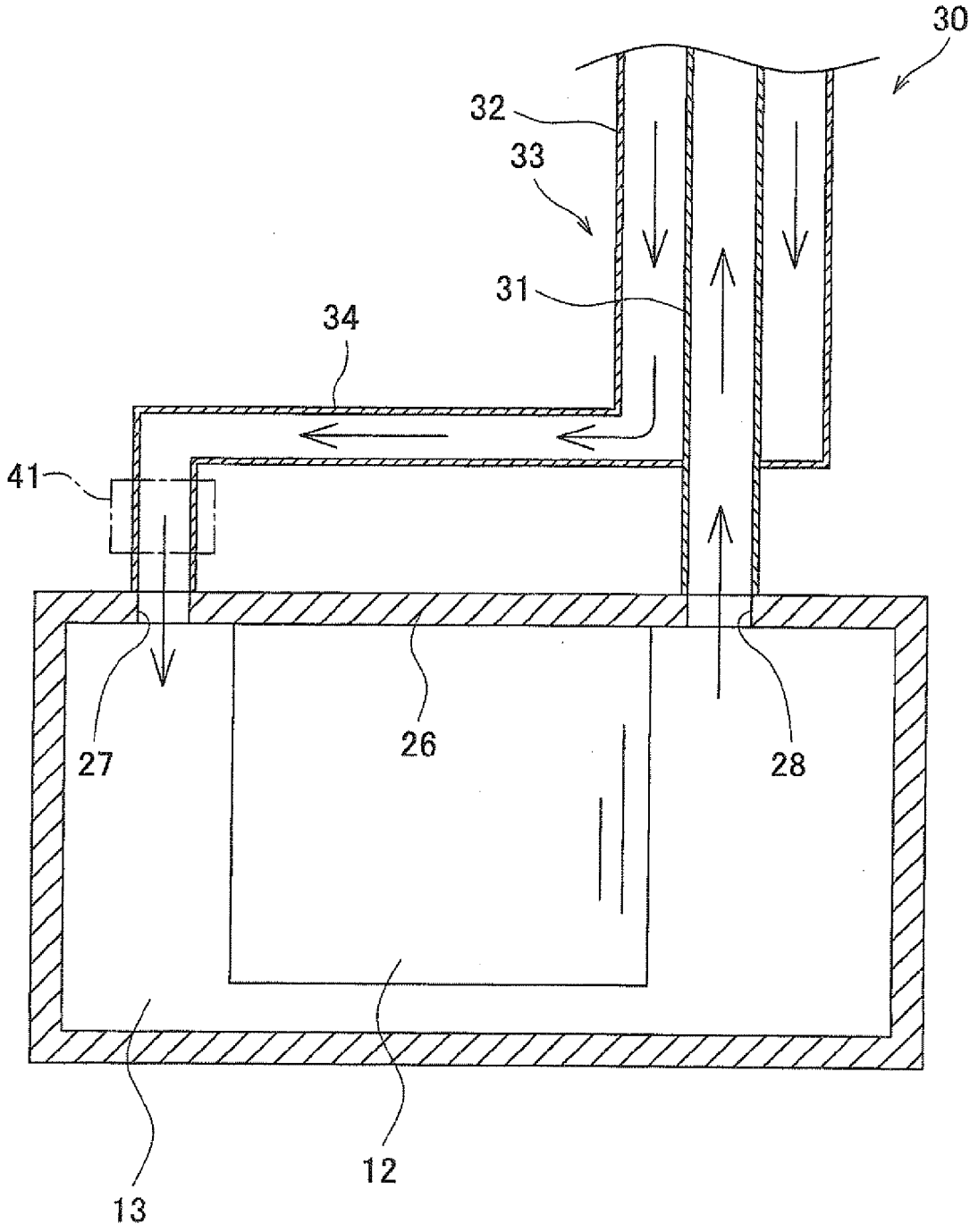

Europäisches Patentamt
European Patent Office
Office européen des brevets

EUROPEAN SEARCH REPORT

Application Number
EP 12 16 0978

DOCUMENTS CONSIDERED TO BE RELEVANT

Category	Citation of document with indication, where appropriate, of relevant passages	Relevant to claim	CLASSIFICATION OF THE APPLICATION (IPC)
X,P	EP 2 415 915 A1 (TMT MACHINERY INC [JP]) 8 February 2012 (2012-02-08) * figures * * paragraphs [0113] - [0116], [0129] - [0155] * -----	1-4,8,9	INV. D02J13/00 D01D10/02
X	US 4 696 642 A (HATTA KEIZO [JP]) 29 September 1987 (1987-09-29) * abstract * * column 3, line 49 - column 4, line 10; figures 1,2 * -----	1-4,7	
X	CN 101 135 535 A (SALT CITY HONGDA WEAVE EQUIPME [CN]) 5 March 2008 (2008-03-05) * abstract * * pages 4-5; figures * -----	1-4,7-9	
X	DE 27 49 058 A1 (INST TEKHN TEPLOFISIKI AKADEMI) 17 May 1979 (1979-05-17) * pages 7-8; figures * * page 9 * * page 14 * -----	1-4,7-9	TECHNICAL FIELDS SEARCHED (IPC) D02J D01D
A	SU 1 432 105 A1 (VNII SINT VOLOKNA [SU]) 23 October 1988 (1988-10-23) * abstract * * figures * -----	1-9	
A	US 3 161 484 A (ENO BAGNOLI ET AL) 15 December 1964 (1964-12-15) * figure 4 * -----	1-9	
A	EP 0 294 023 A2 (EXTRUSION SYSTEMS LTD [GB]) 7 December 1988 (1988-12-07) * figures 1,2 * * abstract * -----	1-9	

The present search report has been drawn up for all claims

Place of search	Date of completion of the search	Examiner
The Hague	25 July 2012	Barathe, Rainier

CATEGORY OF CITED DOCUMENTS

X : particularly relevant if taken alone
Y : particularly relevant if combined with another document of the same category
A : technological background
O : non-written disclosure
P : intermediate document

T : theory or principle underlying the invention
E : earlier patent document, but published on, or after the filing date
D : document cited in the application
L : document cited for other reasons
.....
& : member of the same patent family, corresponding document

1

EPO FORM 1503 03.82 (P04C01)

ANNEX TO THE EUROPEAN SEARCH REPORT ON EUROPEAN PATENT APPLICATION NO. EP 12 16 0978

This annex lists the patent family members relating to the patent documents cited in the above-mentioned European search report.
The members are as contained in the European Patent Office EDP file on
The European Patent Office is in no way liable for these particulars which are merely given for the purpose of information.

25-07-2012

Patent document cited in search report		Publication date	Patent family member(s)			Publication date
EP 2415915	A1	08-02-2012	CN	102373525	A	14-03-2012
			EP	2415915	A1	08-02-2012
US 4696642	A	29-09-1987	AU	559466	B2	12-03-1987
			AU	5714386	A	20-11-1986
			DE	3615894	A1	20-11-1986
			ES	8707334	A1	01-10-1987
			FR	2582027	A1	21-11-1986
			GB	2175381	A	26-11-1986
			IT	1203556	B	15-02-1989
			JP	61187397	U	21-11-1986
			KR	890002468	Y1	22-04-1989
			US	4696642	A	29-09-1987
CN 101135535	A	05-03-2008	NONE			
DE 2749058	A1	17-05-1979	NONE			
SU 1432105	A1	23-10-1988	NONE			
US 3161484	A	15-12-1964	NONE			
EP 0294023	A2	07-12-1988	EP	0294023	A2	07-12-1988
			US	5040971	A	20-08-1991

EPO FORM P0459

For more details about this annex : see Official Journal of the European Patent Office, No. 12/82

REFERENCES CITED IN THE DESCRIPTION

This list of references cited by the applicant is for the reader's convenience only. It does not form part of the European patent document. Even though great care has been taken in compiling the references, errors or omissions cannot be excluded and the EPO disclaims all liability in this regard.

Patent documents cited in the description

- JP 2007077547 A **[0002]**
- JP 2001262429 A **[0003]**