(19) Europäisches Patentamt
European Patent Office
Office européen des brevets

(11) EP 2 522 795 A1

(12) EUROPEAN PATENT APPLICATION

(43) Date of publication:
14.11.2012 Bulletin 2012/46

(51) Int Cl.:
E05B 9/08 *(2006.01)* ***E05C 9/04*** *(2006.01)*
E05C 9/10 *(2006.01)*

(21) Application number: **12167488.1**

(22) Date of filing: **10.05.2012**

(84) Designated Contracting States:
AL AT BE BG CH CY CZ DE DK EE ES FI FR GB GR HR HU IE IS IT LI LT LU LV MC MK MT NL NO PL PT RO RS SE SI SK SM TR
Designated Extension States:
BA ME

(30) Priority: **11.05.2011 IT BO20110266**

(71) Applicant: **GSG INTERNATIONAL S.p.A.**
40054 Budrio (Bologna) (IT)

(72) Inventor: **Lambertini, Marco**
40068 San Lazzaro Di Savena (IT)

(74) Representative: **Lanzoni, Luciano**
Bugnion S.p.A.
Via di Corticella, 87
40128 Bologna (IT)

(54) **Operating device for hopper/awning window units and hopper/awning window unit comprising the same**

(57) An operating device for a hopper/awning window unit, comprising an operating element (2) which can be associated with a locking mechanism (104) for the window unit (100) comprising a first mobile portion (2a) and means (3) for supporting the operating element (2) which can be associated with a mobile frame (102) at a channel (103) for keeping the operating element (2) connected to the mobile frame (102). The supporting means (3) comprise at least one connecting body (14, 54) fixed to the containment body (5) and comprising a portion with a smaller cross-section (14a, 54a) and a portion with a larger cross-section (14b, 54b) which form an undercut (15, 55) at least partly able to abut by resting on the plates (103d) of the lower wall (103c) of the channel (103), thus preventing the connecting body (14, 54) from passing through the slot (103a).

FIG.1

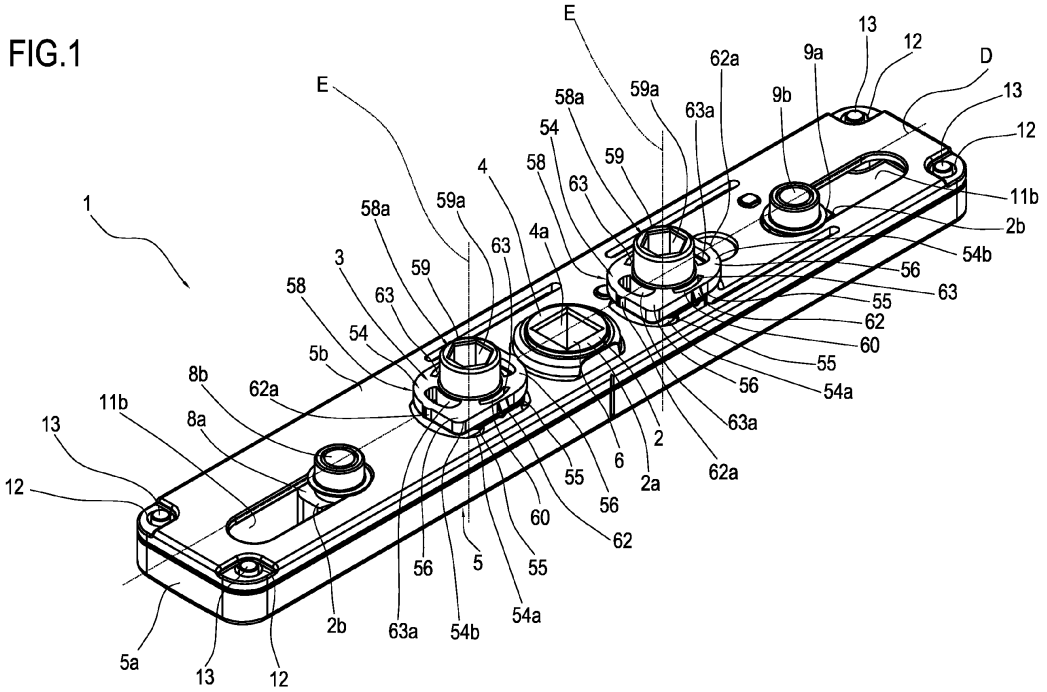

EP 2 522 795 A1

Description

[0001] This invention relates to an operating device for hopper/awning window units, preferable of the type made of metal or PVC.

[0002] This invention is mainly applied in the sector of accessories for window units, and in particular is intended for systems for operating and locking/closing hopper/awning window units.

[0003] Consequently, this invention is particularly relevant to the assembly and, if necessary, the maintenance of the window unit.

[0004] Such window units (hopper/awning) comprise a sash (or mobile frame) which can be moved outwards from a room and is movably connected to a fixed frame.

[0005] Normally, said connection is formed by a kinematic mechanism equipped with a pair of lateral hinge arms interposed between the stiles of the fixed frame and of the mobile frame (hinge arm visible in patent document WO 2008/065510 by this Applicant).

[0006] Alternatively, the mobile frame may be hinged near its upper side (rail) to the fixed frame of the window with a conventional type of hinge.

[0007] In the prior art there are operating devices for these window units necessary for moving suitable elements for locking the sash relative to the fixed frame of the window.

[0008] The operating device most commonly used for that purpose (known to experts in the sector as "gear") comprises a longitudinal containment body having a square (that is to say, an element comprising a square hole) which can be engaged by the handgrip of a handle and rotatably connected to an element for moving the locking elements. In particular, by means of said element for moving the locking elements, the rotary movement of the square (imparted by the user by means of the handle handgrip) is converted into a linear movement of a pair of movement rods for positioning/moving away pins or bolts relative to contact elements located on the fixed frame, for determining the locked or released configuration of the sash relative to the fixed frame.

[0009] In hopper/awning window units, such operating devices are located at a lower rail of the sash, and face downwards.

[0010] Consequently, the handle is positioned at the lower rail, but faces upwards.

[0011] More precisely, the profile of the lower rail comprises a "C"-shaped channel, extending along the rail and used for sliding positioning of the locking elements (rods) along the rail and also used for anchoring the operating device. It should be noticed that the operating device is mounted outside the channel, that is to say, with its containment body outside the channel.

[0012] Consequently, these operating devices need supporting equipment which keeps them stably anchored to the sash during their mounting together with respective positioning and connection of the other operating and control elements to the operating device.

[0013] In addition, this equipment must securely support the device even during subsequent maintenance operations. This safety device is particularly necessary if the window unit fitted with the supporting equipment for the containment body is mounted on a very high building. Patent application EP2175095 describes equipment for that purpose, designed to hold the operating device in position before mounting or when the handle (and any other connecting means present, such as the rods) must be manipulated for maintenance reasons.

[0014] The equipment shown therein comprises a plastic moulding with which two cams rotatably engage and, depending on the angular position, the cams being able to radially deform the moulding.

[0015] Said equipment can be associated with an operating device by a clip or a snap fitting positioned at the square in such a way that the operating device and the anchoring equipment are substantially superposed and integral.

[0016] Document EP2175095 describes how the anchoring equipment can be inserted in the channel through the lower opening (the gap in the "C" shape) in such a way that the operating device can be positioned below the channel, facing downwards.

[0017] Once the equipment has been inserted in the channel, its lateral walls are radially deformed by rotation of the cams, thus creating interference with the lateral sides of the channel.

[0018] Disadvantageously, the equipment described in patent document EP2175095 is not very reliable, since the effectiveness of the support is linked to a deformation which does not create a geometric impediment to the equipment slipping off before it is definitively fixed using screws.

[0019] Moreover, correct operation of the equipment depends solely on correct rotation of the cams, which, first, cannot be precisely controlled by the operator and, second, may vary as time passes, making the anchoring not very reliable during any maintenance work carried out.

[0020] It should also be noticed that the equipment described in patent document EP2175095 must be kept in the desired position, in the channel, manually until the step of rotation of the cams.

[0021] Consequently, that solution makes device mounting particularly inconvenient, as well as not very secure (if it is not held in position correctly, the device could come out of the channel).

[0022] The aim of this invention is to provide an operating device for hopper/awning window units which overcomes the above-mentioned disadvantages of the prior art.

[0023] In particular, the aim of this invention is to provide an operating device for hopper/awning window units which can provide stable, effective anchoring.

[0024] Another aim of this invention is to provide an operating device for hopper/awning window units which is inexpensive and is easy to mount.

[0025] These aims are fulfilled by the operating device for hopper/awning window units according to this invention, as characterised in the appended claims and in particular comprising supporting means which are rigidly fixed to the operating element and shaped in such a way that they can slide freely in the channel along the line of extension of the channel, and geometrically connectable in the channel transversally to said line of extension, for connecting the operating element to the mobile frame.

[0026] This and other features of the invention will become more apparent from the following detailed description of a preferred, non-limiting example embodiment of it, with reference to the accompanying drawings, in which:

- Figure 1 is a perspective view of a first embodiment of an operating device for hopper/awning window units according to this invention;
- Figure 2 is an exploded perspective view of the device of Figure 1;
- Figure 3 is a top view of a detail of a hopper/awning window unit comprising the device of Figure 1;
- Figure 4 is a cross-section of the window unit of Figure 3;
- Figure 5 is a top view of the device of Figure 1 in a particular operating configuration;
- Figure 6 is a perspective view of a second embodiment of an operating device for hopper/awning window units according to this invention;
- Figure 7 is an exploded perspective view of the device of Figure 6;
- Figure 8 shows the device of Figure 6 in a step of mounting on a hopper/awning window unit;
- Figure 9 is a side view of a detail of a hopper/awning window unit comprising the operating device of Figure 6. With reference to the accompanying drawings, the numeral 1 denotes an operating device for window units according to this invention.

[0027] As indicated, the operating device 1 can be applied to a window unit 100 of the hopper/awning type.

[0028] The window unit 100 comprises a fixed frame 101 which can be inserted in and anchored to a gap made in a wall (not illustrated), hinged to which there is a mobile frame 102 (or sash) able to move towards the outside of the room defined by the wall.

[0029] In particular, both the fixed frame 101 and the mobile frame 102 have a substantially quadrilateral structure and have respective lower rails 101a, 102a and upper rails (not illustrated).

[0030] The terms upper and lower refer to the installed window unit 100 (and the device 1), that is to say, installed in the wall, in such a way that said terms are unambiguous.

[0031] In the window unit 100 the mobile frame and the fixed frame are movably connected to each other in such a way that the mobile frame 102 can move between an open position, in which it projects from the fixed frame 101 towards the outside of the room formed by it, and a closed position in which it abuts (is in contact with) the fixed frame.

[0032] In other words, the fixed frame 101 and the mobile frame 102 are rotatably associated with each other.

[0033] It should be noticed that relative to the expression "rotatably associated" all kinematic mechanisms are considered which allow the mobile frame 102 to have at least one rotating movement relative to the fixed frame 100, but without limiting the movement to rotation only. Indeed, it is also possible for the mobile frame 102 to roto-translate relative to the fixed frame 101.

[0034] For that purpose, in a first embodiment, the fixed frame 101 is connected to the mobile frame 102 by a kinematic mechanism equipped with a pair of lateral hinge arms (not illustrated) interposed between the stiles of the fixed frame 101 and of the mobile frame 102 (hinge arm visible in patent document WO 2008/065510 by this Applicant).

[0035] Alternatively, the mobile frame 102 may be hinged near its upper side (rail) to the fixed frame 101 of the window unit 100 with a conventional type of hinge. Consequently, the lower rail 102a of the mobile frame 102 can move towards and/or away from the lower rail 101a of the fixed frame 101 to form, respectively, a closed configuration and an open configuration.

[0036] The lower rail 102a of the mobile frame 102 is therefore positioned on the opposite side to the window unit 100 hinge axis.

[0037] At the lower rail 102a of the mobile frame 102 there is a tubular channel 103 extending along its own longitudinal line of extension "B".

[0038] In the embodiment illustrated, the channel 103 extends along the line of extension "B" between a free inlet section 103b and a free outlet section.

[0039] In alternative embodiments, the channel could also have a single free inlet section.

[0040] Preferably, the channel 103 extends along the lower rail 102 (more preferably parallel with it).

[0041] For construction simplicity, the channel 103 is made in one piece with the lower rail 102, in a single profile.

[0042] The channel 103 comprises a lower slot 103a extending (and orientated) along the line of extension "B" for forming a longitudinal transit gap, facing downwards in practice.

[0043] The width of the slot 103a is less than the width of the channel 103 and the length of the slot is substantially equal to that of the rail.

[0044] In other words, the slot 103a is formed on a bottom wall of the channel 103, preferably in a central zone.

[0045] The bottom wall of the channel 103 is therefore formed by a pair of longitudinal plates extending parallel with each other along the line of extension "B" and separated by the slot 103a.

[0046] In other words, the channel 103è is formed by a pair of sections projecting from the rail 102b and "L"-

shaped, which are opposite and facing each other.

[0047] Consequently, the channel 103 has a "C"-shaped cross-section, in which the space between the two ends of the "C" is formed by the slot 103a.

[0048] The operating device 1 according to this invention is designed to be positioned at the lower rail 102a, and in particular to be anchored to the channel 103.

[0049] The device 1 comprises an operating element 2 which can be associated with a mechanism 104 for fastening the window unit 100 and means 3 for supporting the operating element 2 which can be associated with the mobile frame 102 at the channel 103 for keeping the operating element 2 connected to the lower rail 102a of the mobile frame 102.

[0050] The above-mentioned operating element 2 comprises a first mobile portion 2a, which can engage with a handle, and a second mobile portion 2b connected to the first 2a and associable with the fastening mechanism 104.

[0051] More precisely, the operating element 2 is housed in a containment body 5 for the above-mentioned first mobile portion 2a and second mobile portion 2b which is substantially longitudinal and extends along its own main axis "D".

[0052] The first mobile portion 2a is shaped so that it can engage with the respective handle (or other control means, not illustrated) in such a way that a rotation of the handle (not illustrated) corresponds to a rotation of the first portion 2a.

[0053] In other words, the first portion 2a can be rigidly connected to a connecting end of the handle.

[0054] Preferably, the first portion 2a is formed by an element 4 able to rotate relative to the containment body 5 and having connector 4a, which can engage with the handle, and a transmission element 4b connected to the second mobile portion 2b.

[0055] In the embodiment illustrated, the connector 4a is formed by a hole with a square section (or square) 6.

[0056] In contrast, the transmission element 4b is formed by a plurality of teeth 7 projecting radially from the rotary element 4.

[0057] The second mobile portion 2b is shaped to engage with the first mobile portion 2a in such a way that a rotation of the handle (and therefore of the first mobile portion 2a) corresponds to a linear translation of the second mobile portion 2b.

[0058] In other words, the second portion 2b is connected in a substantially rigid way to the first portion for moving depending on the rotation of the handle.

[0059] Preferably, the second mobile portion 2b comprises a rack 8 associated with the rotary element 4, and in particular meshing with the plurality of teeth 7.

[0060] In the embodiment illustrated, the second mobile portion 2b comprises a further rack 9 opposite the rack 8 and able to move along the same line, but in the opposite direction.

[0061] In particular, interposed between the rack 8 and the further rack 9 there is a gear wheel 10 which allows the transfer of motion from the rack 8, driven by the rotary body 4, to the further rack 9.

[0062] In other words, the gear wheel 10 can rotate about an axis parallel with the rotary element 4, aligned with it, in such a way as to transfer to the further rack 9 a linear motion equal and opposite to that of the rack 8. Therefore, the further rack 9 is "guided" by the "pilot" rack 8.

[0063] The rack 8 and the further rack 9 both have a free end 8a, 9a equipped with a pin 8b, 9b which can be coupled to the movement mechanism 103 of the window unit 100. Said free ends 8a, 9a are positioned at opposite ends of the containment body 5.

[0064] Preferably, the line of translation of the rack 8 and of the further rack 9 is parallel with (in particular coincides with) the main axis "D" of the containment body 5.

[0065] In the embodiment illustrated, the movement mechanism 104 comprises a first movement rod 104a and a second movement rod 104b, each having an end which can pivot at (or be coupled to) the respective rack 8, 9.

[0066] Preferably, the containment body 5 comprises a base 5a and a lid 5b which can be rigidly connected (with a snap fitting or using fastening means) to the base.

[0067] The base 5a is box-shaped for housing the first mobile portion 2a and the second mobile portion 2b of the operating element 2.

[0068] In contrast, the lid 5b has a closing and protective function and is positioned on top of the base 5a. Preferably, the lid 5b has a plurality of openings 11 for allowing the portions interacting with the window unit 100 fastening mechanism 103 to project.

[0069] In particular, the lid 5b comprises an opening 11a (substantially central) through which the square 6 passes (or through which the handle may pass).

[0070] Moreover, the lid 5b comprises a pair of slits 11b (that is to say, elongate openings) in which the pins 8b, 9b of the racks 8, 9 can slide freely.

[0071] Preferably, the slits 11b are specular and substantially symmetrical relative to the opening 11a.

[0072] Preferably, the lid 5b also comprises a plurality of mounting holes 12, each of which can be (slidably) associated with a respective pin 13 of the base 5a useful for simplifying and speeding up mounting of the operating element 2.

[0073] Preferably, mounted on the pins there are enlarging bushings, for increasing the diameter of the pins (for example up to 8 mm) so as to meet various mounting requirements (rods with a hole measuring 6 mm and 8 mm). According to this invention, the device 1 comprises, rigidly connected to the containment body 5, the supporting means 3 of the operating element 2.

[0074] Said supporting means 3 are designed for associating the containment body 5 (and therefore the operating element 2) with the mobile frame 102, at the channel 103, thus preventing accidental detachment of the containment body 5 (and the operating element 2) and the lower rail 102a of the mobile frame 102.

[0075] Therefore, the supporting means 3 are rigidly fixed to the containment body 5, or rigidly connected to it (by screws or snap fitting means) or made in one piece with the lid 5b or with the base 5a.

[0076] In the preferred embodiment, the supporting means 3 are made in one piece with at least an upper portion of the containment body 2 (or with the lid 5b).

[0077] Preferably, the supporting means 3 are shaped in such a way that they can slide freely in the channel 103 along the longitudinal line of extension "B" and so that they can be geometrically connected to the inside of the channel 103 transversally to the line of extension "B" in such a way as to connect the containment body 5 (and the operating element 2) to the mobile frame 102. Therefore, the supporting means 3 preferably are slidably connectable to the channel 103.

[0078] In other words, the connection between the supporting means 3 and the channel 103 allows only (except for negligible shifting) sliding of the supporting means along the channel 103 (or along the longitudinal line of extension "B").

[0079] For that purpose, the supporting means 3 are partly shaped to match the channel 103 in such a way that they are slidably connected inside it.

[0080] Advantageously, that allows the operator to insert the supporting means 3 in the channel 103 by sliding (that is to say, along the line of extension "B") without the risk of the device 1 and the mobile frame 102 becoming detached.

[0081] It should be noticed that, in practice, the main axis "D" of the containment body 5 (and therefore of the device 1) coincides with the longitudinal line of extension "B" of the channel 103.

[0082] According to the invention, the supporting means 3 comprise at least one connecting body 14, 54 fixed to the containment body 5 and comprising a portion having a smaller cross-section 14a, 54a, proximal to the containment body 5, and a portion having a larger cross-section 14b, 54b, distal from the containment body 5 for forming an undercut 15, 55.

[0083] In practice (that is to say, in a mounting condition), the portion with the larger cross-section 14b, 54b is at least partly able to abut on the plates 103d of the bottom wall 103c of the channel 103 so as to prevent the connecting body 14, 54 from passing through the slot 103a.

[0084] In other words, when the device 1 is in use, the portion having the larger cross-section 14b, 54b of each body 14, 54 rests on the bottom wall of the channel 103, at a respective plate.

[0085] Consequently, the width of the portion with the smaller cross-section 14a is less than or equal to the width of the slot 103a, while the width of the portion with the larger cross-section 14b is greater than that of the slot 103.

[0086] In more detail, the connecting body 14 rises above the containment body 5 (more preferably from the lid 5b).

[0087] In particular the portion with the larger cross-section 14a is distal from the lid 5b relative to the portion with the smaller cross-section 14a.

[0088] In this way, the connecting body 14 forms the undercut 15.

[0089] Preferably, the containment body 14, 54 (and therefore the supporting means 3) is shaped in such a way as to slide freely in the channel 103.

[0090] Advantageously, the undercut 15, 55 allows the sliding effect to be obtained in a simple fashion.

[0091] In this way, the portion with the larger cross-section 14b, 54b is slidably guided inside the channel 103 and the portion with the smaller cross-section 14a, 54a acts as a connecting element with the containment body 5 (and with the operating element 2).

[0092] Preferably, the supporting means 3 comprise a pair of connecting bodies 14, 54 which are opposite each other and (at least partly) positioned on opposite sides of the device 1.

[0093] More precisely, the two connecting bodies 14, 54 are preferably positioned on opposite sides relative to the first mobile portion 2a of the operating element 2.

[0094] In other words, the two connecting bodies 14, 54 are positioned one after the other along the main axis "D" and the first mobile portion 2a (or the rotary body 4) of the operating element 2 is inserted between them. Preferably, the two connecting bodies 14, 54 are positioned specularly relative to the first portion 2a of the operating element 2, along the main axis "D" of the containment body 5.

[0095] Preferably, each connecting body 14, 54 comprise at least one "L"-shaped portion (or tab) 16, 56 rising from the containment body 5 (in particular from the lid 5b) to form the respective undercut 15, 55.

[0096] It should be noticed that the vertical part of the "L" at least partly forms the portion with the smaller cross-section 14a, 54a, whilst the horizontal part at least partly forms the portion with the larger cross-section 14b, 54b (and rests on the bottom wall of the channel 103).

[0097] Preferably, each connecting body 14, 54 comprises two tabs 16, 56 at least partly orientated away from each other.

[0098] More precisely, the "L"-shaped portions 16, 56 are (at least) partly facing each other and orientated in opposite directions.

[0099] In other words, the "L"-shaped portions 16, 56 of each body 14, 54 partly extend along the same line, but in different directions.

[0100] Consequently, each connecting body 14, 54 forms two undercuts 15, 55.

[0101] For that purpose, it should be noticed that the horizontal stretch of each "L"-shaped portion 16, 56 extends from the vertical stretch away from the other "L"-shaped portion.

[0102] Therefore, with reference to a plane at a right angle to the main axis "D", each pair of tabs 16, 56 substantially forms a "T"-shaped cross-section. Preferably, a horizontal member of the "T" extends specularly on

opposite sides of the vertical member.

[0103] In the embodiment illustrated, the two "L"-shaped portions 16, 56 of each body 14, 54 are offset from each other along the main line "D".

[0104] In other words, the "L"-shaped portions 16, 56 are at least partly positioned one after the other along the main axis "D".

[0105] Advantageously, this maximises the active supporting surface and minimises the material necessary (reducing the costs).

[0106] Preferably, the two tabs 16, 56 are connected to each other by a joint element 17.

[0107] In a first embodiment (with reference to Figures 1 to 5) each connecting body 54 can switch between an insertion configuration, in which it can be partly inserted in the channel 103 through the slot 103a, and a supporting configuration, in which the part insertable (or inserted) in the channel 103 can be abutted by resting on the plates 103d of the bottom wall 103c of the channel 103.

[0108] Advantageously, this allows the connecting body to be inserted in the channel 103 through the slot 103a at a mounting position, the definitive anchoring being performed subsequently.

[0109] In that embodiment, the portion with the larger cross-section 54b of each connecting body 54 is formed by a cam 58 rotatably connected to the lid 5b of the containment body 5 and protruding from it in order to define an undercut.

[0110] Precisely, the cam 58 is connected to the containment body 5 for rotating between a first angular position, in which it has a minimum transversal extension and it defines the body 14 insertion configuration, and a second angular position, in which it has a maximum transversal extension and defines the body 14 supporting configuration.

[0111] The expression "transversal extension" refers to an extension at a right angle to the main axis "D" of the containment body 5 (and therefore of the device 1), in this text considered to be a longitudinal line.

[0112] More precisely, each cam 58 can rotate about an axis of rotation "E" substantially at a right angle to a surface formed by the lid 5b.

[0113] In other words, the axis of rotation "E" is substantially at a right angle to the bottom wall of the channel 103.

[0114] Preferably, each cam 58 comprises a portion 58a which can be engaged by an operator for rotating it between the insertion configuration and the supporting configuration.

[0115] In particular, the engageable portion 58a of each cam 58 is formed by a head 59 with an upper opening 59a shaped for receiving a movement tool.

[0116] The term "upper" refers to the orientation of the opening 59a when the device is mounted on the window unit 100.

[0117] In other words, the upper opening 59a is facing away from the lid 5b of the containment body 5.

[0118] In the embodiment illustrated, the upper opening 59a has a hexagonal shape (or section) for receiving a corresponding Allen key.

[0119] However, the opening could have any other shape (such as a star or linear) for receiving tools such as screwdrivers or the like.

[0120] Preferably, the upper opening 59a is a through opening.

[0121] The advantage linked to that feature is described in more detail below.

[0122] It should be noticed that, alternatively, the head 59 may comprise a protuberance (not illustrated) shaped in such a way that it can engage with a "female" tool which is shaped to match it.

[0123] It should also be noticed that the engageable portion 58a (that is to say, the head 59) may extend more or less along the axis of rotation "E", depending on the size of the channel 103.

[0124] For example, the engageable portion may have a "vertical" extension (along the axis of rotation "E") which is greater than the extension of the channel 103 along the same line.

[0125] Obviously, in that circumstance the top of the channel 103 has suitable mounting cavities through which the engageable portion 58a can pass.

[0126] Advantageously, this allows the cam 58 to be irremovably engaged, making sliding in the channel 103 impossible.

[0127] Consequently, in that case, the device 1 is mounted by the operator directly in the mounting zone, from which it cannot be moved unless the body 54 is removed from the channel 103.

[0128] Alternatively, the engageable portion may have a "vertical" extension (that is to say, along the axis of rotation "E") which is less than the extension of the channel 103 along the same line.

[0129] In that case, the device can slide along the channel 103.

[0130] Said configurations are alternatives and at the discretion of the manufacturer depending on the desired type of mounting and the dimensions of the channel 103. Preferably, each cam 58 comprises at least one flexible portion 60 projecting laterally from it.

[0131] When the cam 58 is in the insertion configuration, the flexible portion is orientated transversally to the main axis "D" of the containment body 5 to form a system for snap-on positioning of the device 1.

[0132] In other words, the flexible portion 60 yields along a line transversal to the main axis "D" (with the cam 58 in the insertion configuration).

[0133] The expression "system for snap-on positioning" refers to a type of elastic insertion mechanism, able to deform so as to enter in a suitable opening when the movement is in a direction of insertion (that is to say, transversal to the slot 103a) thanks to suitable "guides".

[0134] In light of this, the flexible portion 60 comprises two projections 62 projecting from the opposite lateral edges of the cam 58 and two notches 63 made near to the lateral edges to cause elastic yielding of the projec-

tions 62.

[0135] In other words, the system for snap-on positioning is of the leaf spring type.

[0136] Preferably, the flexible portion 60 is also yielding along a line parallel with the main axis "D" (when the cam 58 is in the insertion configuration).

[0137] Similarly to what is indicated above, the flexible portion 60a comprises two further projections 62a projecting from opposite lateral edges of the cam 58 and two further notches 63a made near to said lateral edges for causing the elastic yielding of the further projections 62a.

[0138] Advantageously, this allows the cam 58 to be adaptable to various types of channel 103 and in particular to adapt to any deformations or defects inside it. Therefore, in the embodiment illustrated, the cam has a substantially quadrilateral shape, in which on each side there is a projection 62, 62a and a notch 63, 63a is made at each one.

[0139] Obviously, the four sides of the cam 58 are connected in pairs and a first pair of sides (corresponding to the tabs 56) is longer than the second pair of sides. Preferably, each cam 58 is rotatably mounted on the containment body 5 (in particular on the lid 5b) and is coupled with the body 5 by elastic snap fitting means 64.

[0140] In other words, the elastic snap fitting means 64 are coupled to the containment body 5 and designed to allow relative rotation and to prevent the cam 58 and the containment body 5 from moving away from each other.

[0141] The expression "elastic snap fitting means" refers to elements able to deform so as to enter a suitable opening when the movement is along an insertion line, thanks to suitable "guides", but shaped to maintain their radial dimension when the movement is along a removal line, thanks to suitable stops, thus preventing removal of the cam 58.

[0142] In light of this, the elastic snap fitting means 64 comprise a plurality of tabs 65 each having a tapered portion which can be inserted through a slit 11c in the containment body 5 (that is to say, the lid 5b) and a stop portion engaged with an edge of the slit 11c to prevent detachment of the cam 58 and the containment body 5.

[0143] More precisely, the tabs 65 form a substantially cylindrical body whose free ends are flexible towards each other.

[0144] In light of this, the slits 11c (one per cam) are made in the lid 5b to allow the insertion of the elastic snap fitting means 64 of the cam 58.

[0145] In the embodiment illustrated, the slits 11c are substantially circular holes, to allow the insertion of the tabs 65.

[0146] Moreover, from the base 5a of the containment body 5, a protuberance 66 rises coaxial with each slit 11c and projecting towards said slit 11c.

[0147] Said protuberances can be inserted between the tabs 65 of the elastic snap fitting means 64 of each cam 58 to prevent them from moving towards each other so as to keep their stop portion engaged on the edge of the slit 11c.

[0148] Therefore, the protuberance 66 is substantially cylindrical for insertion in the circular gap formed by the tabs 65 of the elastic snap fitting means 64. Moreover, the protuberance 66 is substantially shaped to match the gap so as to act as a connecting element and prevent the tabs from moving towards each other. Advantageously, in this way the cam 58 is held integral with the lid 5b in a simple fashion.

[0149] Preferably, the protuberance 66 comprises a through hole, preferably self-tapping, to allow the passage (through it) of device coupling means (such as screws or rivets).

[0150] In other words, the protuberance 66 is a substantially tubular body.

[0151] Therefore, the protuberance 66 is a continuation of the through opening 59a of the head 59 of the cam 58, through which the coupling means (screws or rivets) are inserted to anchor the device 1 to the channel 103.

[0152] In a second embodiment (with reference to Figures 6 to 9), the connecting body 14 is rigidly fixed to the containment body 5 (in particular to the lid 5b) and the portion with the larger cross-section 14b can slide freely in the channel 103.

[0153] In practice, the device 1 is slidably coupled to the channel 103, that is to say, the supporting means are inserted in the channel 103 from the free inlet section 103b and sliding is used to position them in the most suitable position (that is to say, at a zone for housing the handle).

[0154] In that position (once the entire movement mechanism has been mounted) they are fixed using screws or rivets.

[0155] It should be noticed that in that embodiment, the joint element 17 is pierced and forms a point for fixing the operating device 1 to the mobile frame 102.

[0156] In particular, the hole of each joint element 17 is set up to receive a self-tapping screw or the like.

[0157] This invention also relates to the method for mounting the device 1 whose structure is described above.

[0158] The first and second embodiments of the device 1, require respective, different mounting methods.

[0159] The method for the first embodiment comprises the steps of preparing a hopper/awning window unit as described above.

[0160] Moreover, the method comprises preparing the operating device 1 and in particular positioning the connecting body 14 in the insertion configuration, in which it can be partly inserted in the channel 103 through the slot 103a.

[0161] Then the device 1 is positioned by the operator at a preset mounting zone (of the channel 103).

[0162] Generally, the mounting zone of the channel 103 is at a central zone, having suitable mounting/fixing cavities for the device 1.

[0163] After positioning the device 1 at the above-mentioned zone, the operator inserts part of the connecting

body 54 (that is to say, the cam 58) in the channel 103 through the slot 103a.

[0164] Preferably, said insertion is of the clip type, thanks to the presence of the flexible portion 60.

[0165] Moreover, after insertion, the method comprises switching the connecting body 54 from the insertion configuration to the supporting configuration. Preferably, the step of switching the body 54 from the insertion configuration to the supporting configuration is carried out by means of a rotation of approximately 90 degrees by the connecting body 54 (and in particular the cam 58).

[0166] Advantageously, in this way the device 1 is, preferably slidably, anchored to the channel 103.

[0167] In this way, it is possible to connect the first movement rod 104a and the second movement rod 104b to the device, for sliding them in the channel 103. Advantageously, mounting of the window unit locking mechanism is particularly simple and safe in this way. For the second embodiment of the device 1, the mounting method is different, since it is possible to insert the device by sliding along the channel 103.

[0168] The method for this embodiment comprises the steps of preparing the hopper/awning window unit 100 and the operating device 1 described above.

[0169] The method initially comprises insertion of the first movement rod 104a in the channel 103 through the free inlet section 103b.

[0170] Then, the device 1 (in particular one of the pins 8b, 9b), still outside the channel 103, is connected to a free end of the first rod 104a (already inserted in the channel 103).

[0171] A this point, the device is partly inserted (more precisely the supporting means 3 are inserted) in the channel 103 through the free inlet section 103b of the channel 103, forming a "chain" with the first movement rod.

[0172] It should be noticed that said embodiment allows the operator to insert the device in both directions, that is to say, without distinction rotated through 180 degrees.

[0173] The device 1 is then made to slide along the channel 103 until it reaches a mounting position.

[0174] Then, a free end of the second movement rod 104b is connected to the device 1 (in particular to the other pin 8b, 9b) after inserting it in the channel 103. Finally, the second movement rod 104b is inserted by sliding in the channel 103 through the free inlet section 103b.

[0175] Advantageously, in this way the movement (locking) mechanism is mounted simply and securely, without any of the components having the possibility of falling, since they are slidably connected to the channel 103.

[0176] It should be noticed that, after the insertion and positioning of the entire mounting and movement assembly (handle, operating device and locking mechanism) the operating device is rigidly fixed to the sash (the mobile frame 102) using fixing means, for example screws or rivets.

[0177] The invention achieves the preset aims and has important advantages.

[0178] The presence of supporting means geometrically connected inside the channel allows secure device coupling to the sash.

[0179] Moreover, the possibility of inserting the device clip-style, then connecting it with a simple rotation of the cam, increases not just the safety, but also the simplicity of mounting.

[0180] Furthermore, the supporting means which can be slidably connected to the channel of the mobile frame allow the device to be mounted in different ways, increasing its versatility, adapting it to the requirements of various operators.

[0181] The presence of the supporting means able to slide inside the channel also allows chain-style mounting of the entire locking mechanism by sliding insertion of all components (movement rods and device) in the channel. Moreover, the presence of "L"-shaped tabs made in one piece with the lid makes the device easy and inexpensive to produce.

Claims

1. An operating device for a hopper/awning window unit, the window unit (100) comprising a fixed frame (101) and a mobile frame (102) which is rotatably associated with the fixed frame (101) and equipped with at least a lower rail comprising a longitudinal tubular channel (103) extending along a line of extension (B) and comprising a bottom wall (103c) formed by a pair of longitudinal plates (103d) extending in a parallel fashion along the line of extension (B) and separated by a slot (103a) for forming a "C"-shaped cross-section, comprising:

   - a containment body (5) extending along its own main axis (D);
   - an operating element (2) housed in the containment body (5), which can be associated with a mechanism (104) for locking the window unit (100), and comprising a first mobile portion (2a), which can be coupled with a handle, and a second mobile portion (2b) connected to the first portion (2a) and which can be associated with the mechanism (104);
   - supporting means (3) for the containment body (5), which can be associated with the mobile frame (102) at the channel (103) for keeping the operating element (2) connected to the mobile frame (102) and projecting from the channel (103);said supporting means (3) comprising at least one connecting body (14, 54) fixed to the containment body (5) and comprising a portion with a smaller cross-section (14a, 54a), proximal to the containment body (5), and a portion with

a larger cross-section (14b, 54b), distal from the containment body, for forming an undercut (15, 55); the portion with a larger cross-section (14b, 54b) being at least partly abutable by resting on the plates (103d) of the lower wall (103c) of the channel (103), thus preventing the connecting body (14, 54) from passing through the slot (103a) **characterized in that** the portion with the larger cross-section (54b) of each connecting body (54) is formed by a cam (58) rotatably connected to the containment body (5) for rotating between a first angular position, in which it has a minimum transversal extension and it defines the body (54) insertion configuration, and a second angular position, in which it has a maximum transversal extension and defines the body (54) supporting configuration.

2. The operating device according to claim 1, wherein the containment body (5) comprises a base (5a) and a lid (5b) anchored to the base (5a); said cam (58) being rotatably connected to the lid (5b) and protruding from said lid (5b) in order to define an undercut.

3. The operating device according to any of the preceding claims, wherein each cam (58) comprises elastic snap fitting means (64) interposed between the cam (58) and the containment body (5) for holding the cam (58) on the body (5) and designed to allow free relative rotation between the cam (58) and the containment body (5).

4. The operating device according to claim 3, wherein the elastic snap fitting means (64) comprise a plurality of tabs (65) each having a tapered portion which can be inserted through a slit (11c) in the containment body (5) and a stop portion engaged with an edge of the slit (11c) to prevent detachment of the cam (58) from the containment body (5).

5. The operating device according to claim 4, wherein the lid (5b) comprises the slit (11c) for insertion of the elastic snap fitting means (64) of the cam (58) and the base (5a) comprises a protuberance (66) coaxial with the slit (11c) and interposed between the tabs (65) for keeping the tabs (65) engaged with the edge of the slit (11c).

6. The operating device according to any of the foregoing claims, wherein each cam (58) can switch between an insertion configuration, in which it can be partly inserted in the channel (103) through the slot (103a), and a supporting configuration, in which the part insertable in the channel (103) is abutable by resting on the plates (103d) of the bottom wall (103c) of the channel (103).

7. The operating device according to any of the foregoing claims, wherein the containment cam (58) is shaped in such a way as to slide freely in the channel (103).

8. The operating device according to any of the foregoing claims, wherein the supporting means (3) comprise at least two cams (58) which are positioned on opposite sides relative to the first portion (2a) of the operating element (2).

9. The operating device according to claim 8, wherein the two cams (58) are positioned specularly relative to the first portion (2a) of the operating element (2), along the main axis (D) of the containment body (5).

10. The operating device according to claim 6, wherein each cam (58) comprises a portion (58a) which can be coupled to a tool for rotating it between the insertion configuration and the supporting configuration.

11. The operating device according to claim 10, wherein the engageable portion (58a) of each cam (58) is formed by a head (59) with an upper opening (59a) shaped for receiving the movement tool.

12. The operating device according to claim 11, wherein the upper opening (59a) has a hexagonal shape for receiving a corresponding tool.

13. The operating device according to any of the claims from 6 to 12, wherein each cam (58) comprises at least one flexible portion (60) projecting laterally from the cam (58) and, with the cam (58) is in the insertion configuration, orientated transversally to the main axis (D) of the containment body (5) to form a snap-on system for positioning of the device (1).

14. The operating device according to claim 13, wherein the flexible portion (60) comprises two projections (62) projecting from opposite lateral edges of the cam (58) and two notches (63) made near to the lateral edges for causing elastic yielding of the projections (62).

15. The operating device according to claim 13 or 14, wherein, with the cam (58) is in the insertion configuration, the flexible portion (60) also projects laterally from the cam (58) parallel with the main axis (D) of the containment body (5) to form a portion adaptable to the size of the channel (103).

16. The device according to claim 15, wherein the flexible portion (60) comprises two further projections (62a) projecting from opposite lateral edges of the cam (58) and two further notches (63a) made near to the lateral edges for causing elastic yielding of the further projections (62a).

17. A hopper/awning window unit, comprising:

- a fixed frame (101);
- a mobile frame (102) which is rotatably associated with the fixed frame (101) and equipped with at least a lower rail comprising a longitudinal tubular channel (103) extending along a line of extension (B) and comprising a bottom wall (103c) formed by a pair of longitudinal plates (103d) extending in a parallel fashion along the line of extension (B) and separated by a slot (103a) for forming a "C"-shaped cross-section;
- an operating device (1) according to any of the foregoing claims.

18. A method for mounting a movement mechanism in a hopper/awning window unit, comprising the steps of:

- preparing a hopper/awning window unit comprising a fixed frame (101) and a mobile frame (102) which is rotatably associated with the fixed frame (101) and equipped with at least a lower rail comprising a longitudinal tubular channel (103) extending along a line of extension (B) and comprising a bottom wall (103c) formed by a pair of longitudinal plates (103d) extending in a parallel fashion along the line of extension (B) and separated by a slot (103a) for forming a "C"-shaped cross-section;
- preparing an operating device (1) comprising a containment body (5) and containment body (5) supporting means (3) which can be associated with the mobile frame (102) at the channel (103) for keeping the operating element (2) connected to the mobile frame (102) and projecting from the channel; the supporting means (3) comprising at least one connecting body (14, 54) fixed to the containment body (5) and able to switch between an insertion configuration, in which it can be partly inserted in the channel (103) through the slot (103a), and a supporting configuration, in which the part insertable in the channel (103) can be abutted by resting on the plates (103d) of the bottom wall (103c) of the channel (103);
- positioning the operating device (1), in the insertion configuration, below the channel (103), in a predetermined mounting zone;
- inserting part of the connecting body (14) of the operating device (1) in the channel (103) through the slot (103a);
- switching the connecting body (14) from the insertion configuration to the supporting configuration.

19. The method according to claim 18, wherein the step of switching the body (14) from the insertion configuration to the supporting configuration is carried out by means of a rotation of approximately 90 degrees by the connecting body (14).

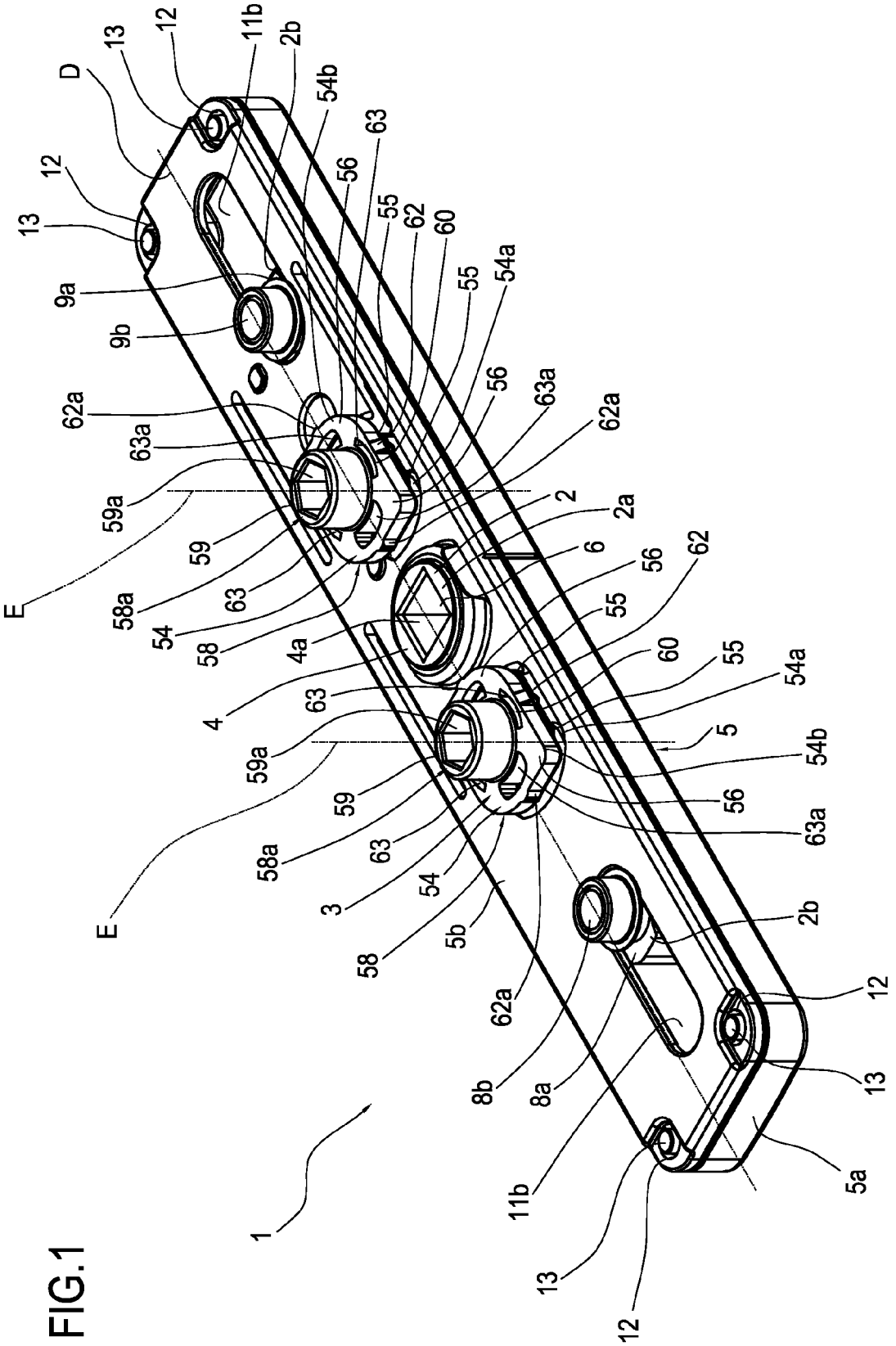
D
13
12
11b
2b
54b
63
56
55
62
60
55
54a
56
63a
62a
2
2a
6
56
62
55
60
55
54a
5
54b
56
63a
2b
12
13
5a
12
13
11b
8a
8b
62a
58
5b
54
3
63
58a
59
63
59a
E
4
4a
58
54
58a
63
59
59a
E
62a
63a
9b
9a
13
12
D
13
12
11b
2b
54b
63
56
55
62
60
55
54a
1

FIG.1

FIG.2

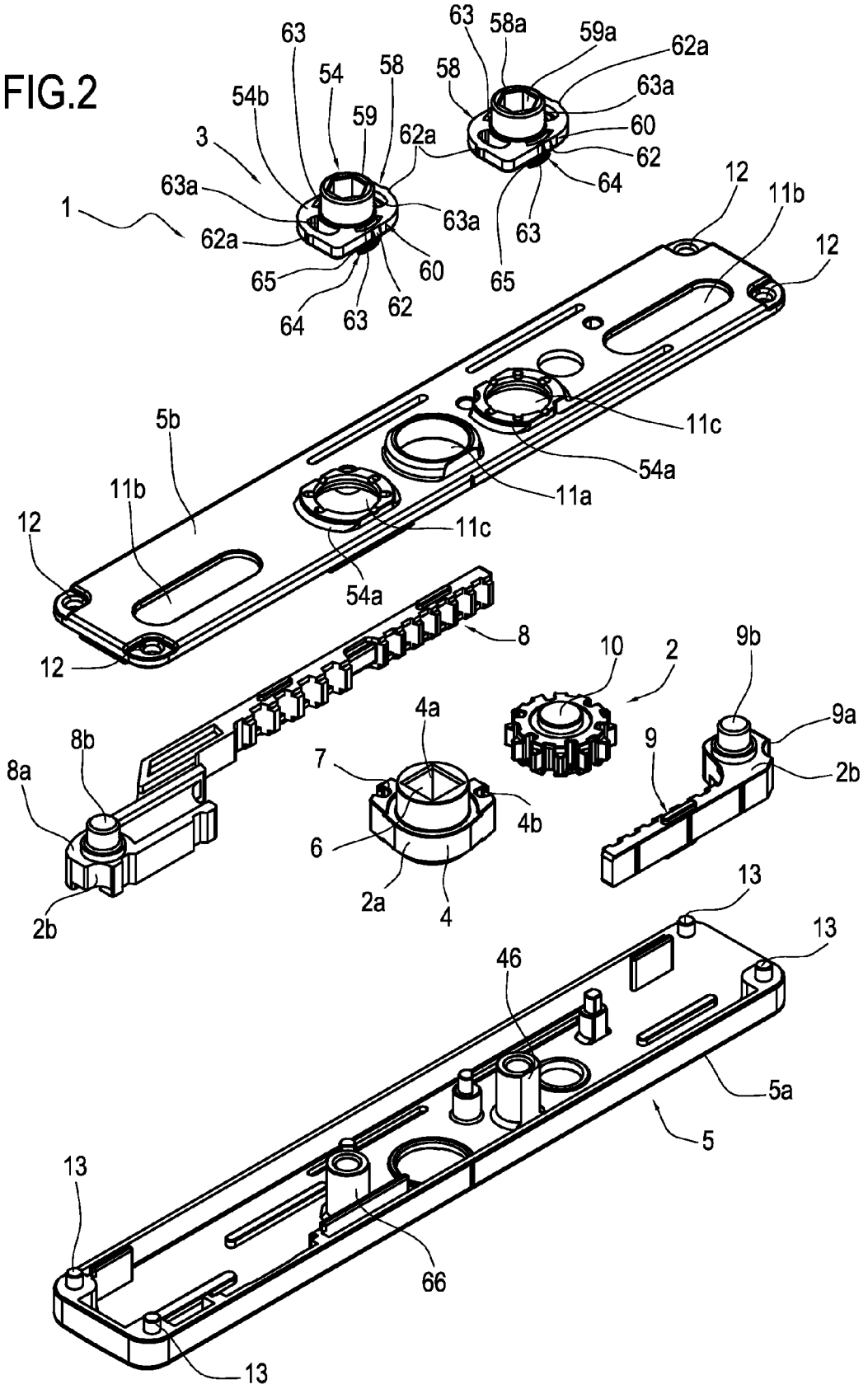
63
58a
59a
62a
63
54
58
58
63a
54b
59
60
3
62a
62
64
12
11b
63a
1
63a
62a
63
12
60
65
65
64
63
62
11c
5b
54a
11b
11a
12
11c
54a
8
12
10
2
9b
4a
9a
8b
9
8a
7
2b
4b
6
2a
4
2b
13
13
46
5a
5
13
66
13

FIG.4

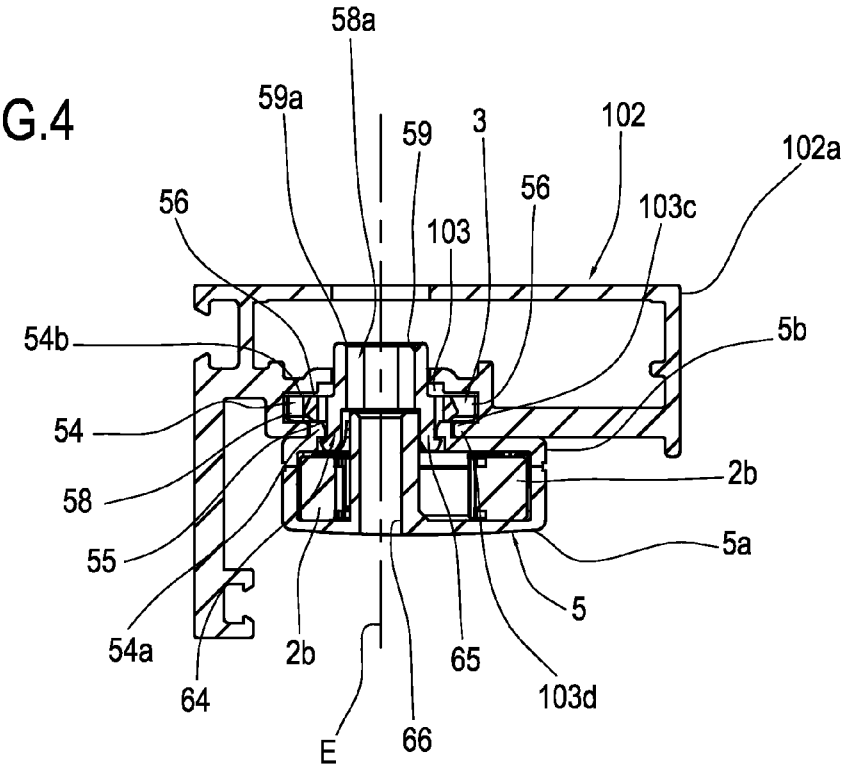
58a
59a
59
3
102
102a
56
56
103
103c
54b
5b
54
2b
58
5a
55
5
54a
2b
65
64
103d
E
66

FIG.3

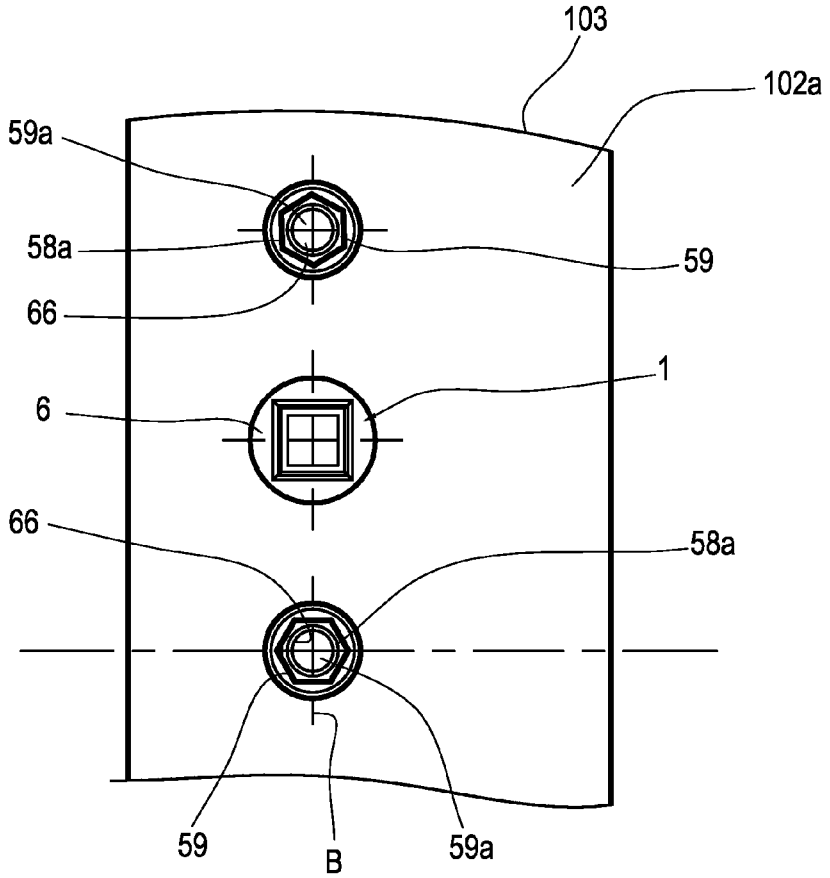
103
102a
59a
58a
59
66
1
6
66
58a
59
B
59a

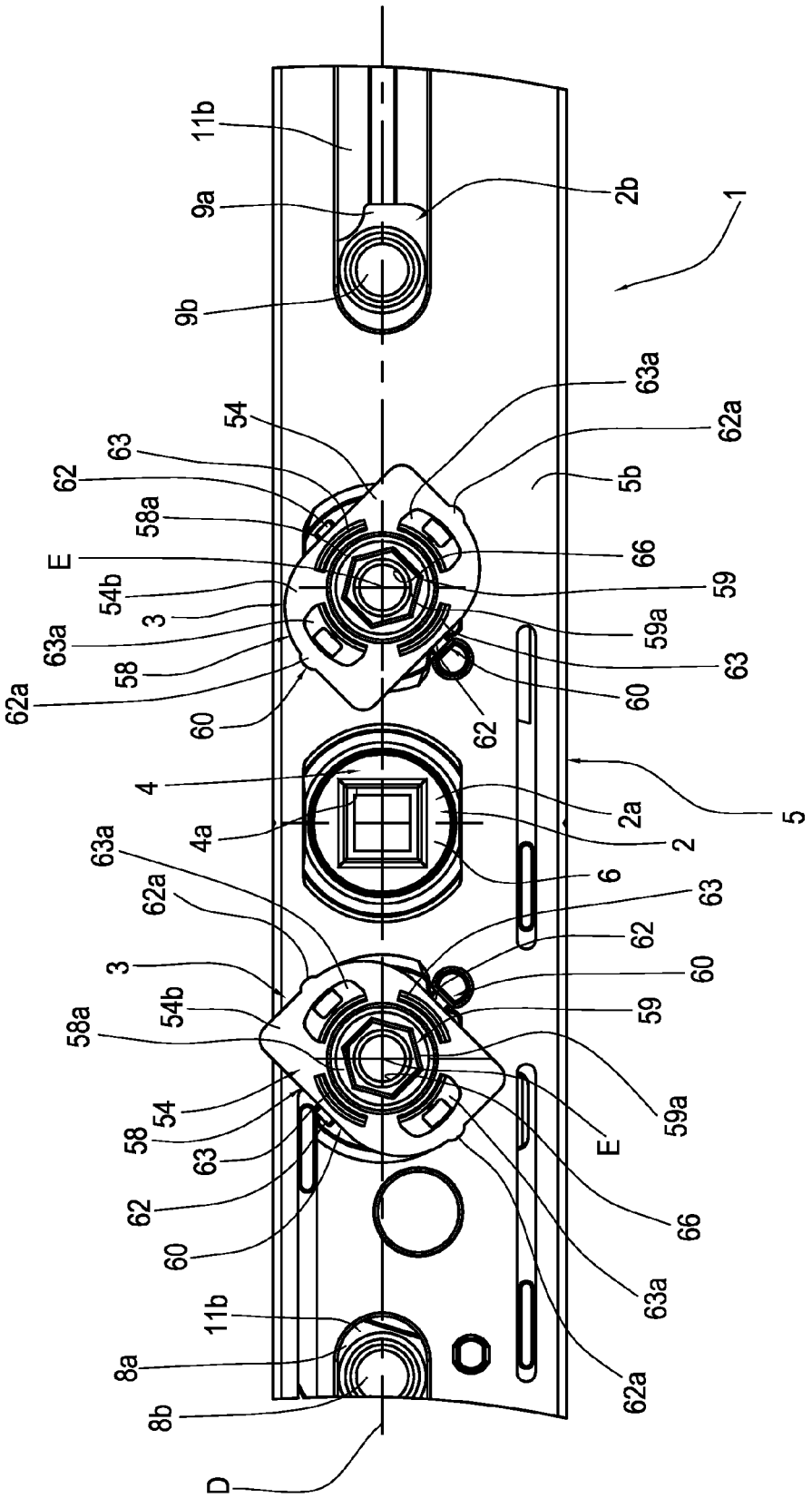
11b
9a
9b
2b
1
63a
62a
5b
54
63
62
58a
E
66
54b
3
59
59a
63a
58
63
62a
60
60
62
4
5
4a
2a
2
63a
6
62a
63
62
3
60
54b
59
58a
59a
54
58
63
E
62
66
60
63a
11b
8a
62a
8b
D

FIG.5

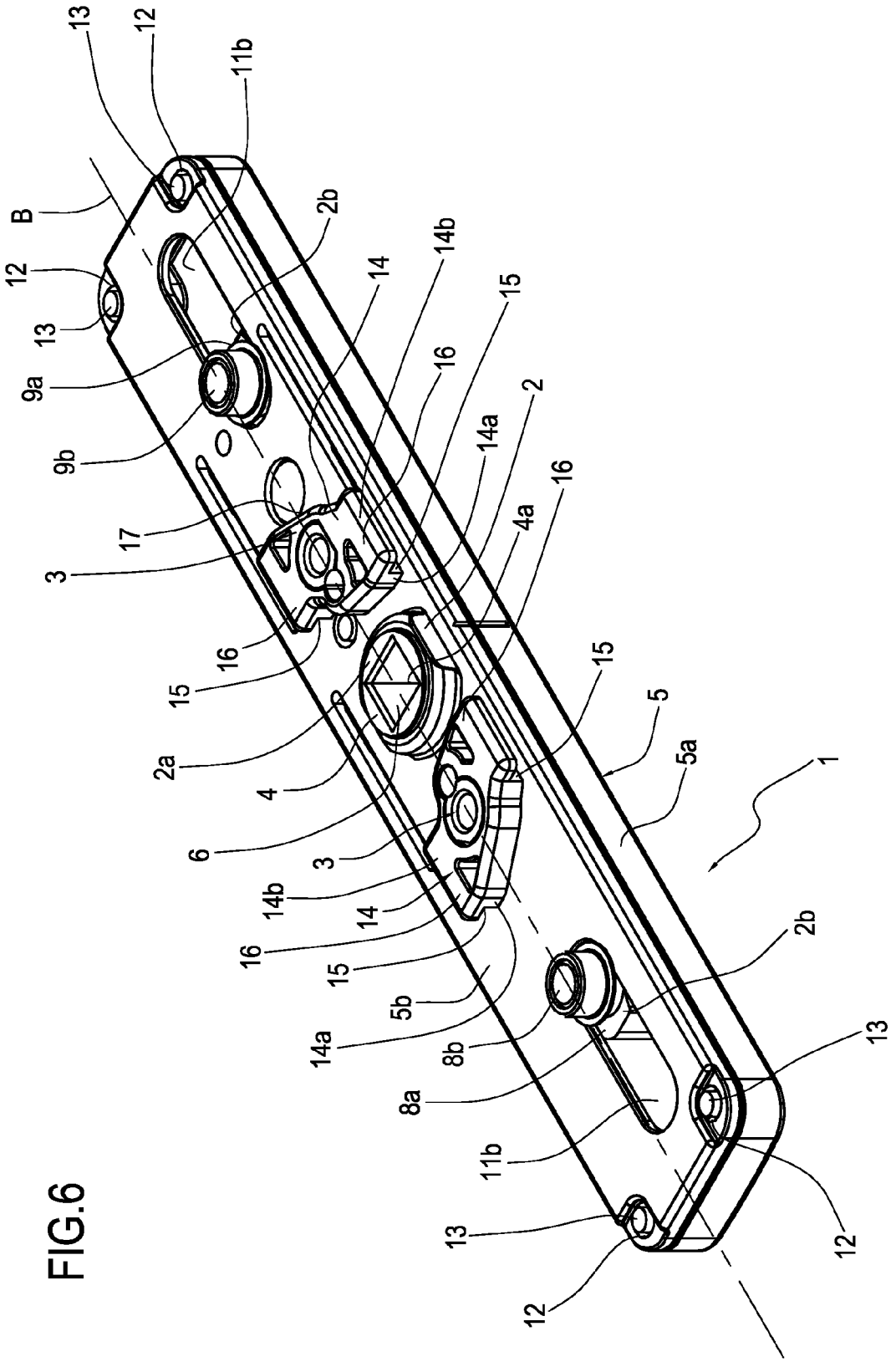
13
12
11b
B
12
13
9a
9b
2b
14
14b
15
16
2
14a
16
4a
17
3
16
15
2a
4
6
3
14b
14
16
15
5b
14a
8b
8a
11b
13
12
15
5
5a
1
2b
13
12

FIG.6

FIG.7

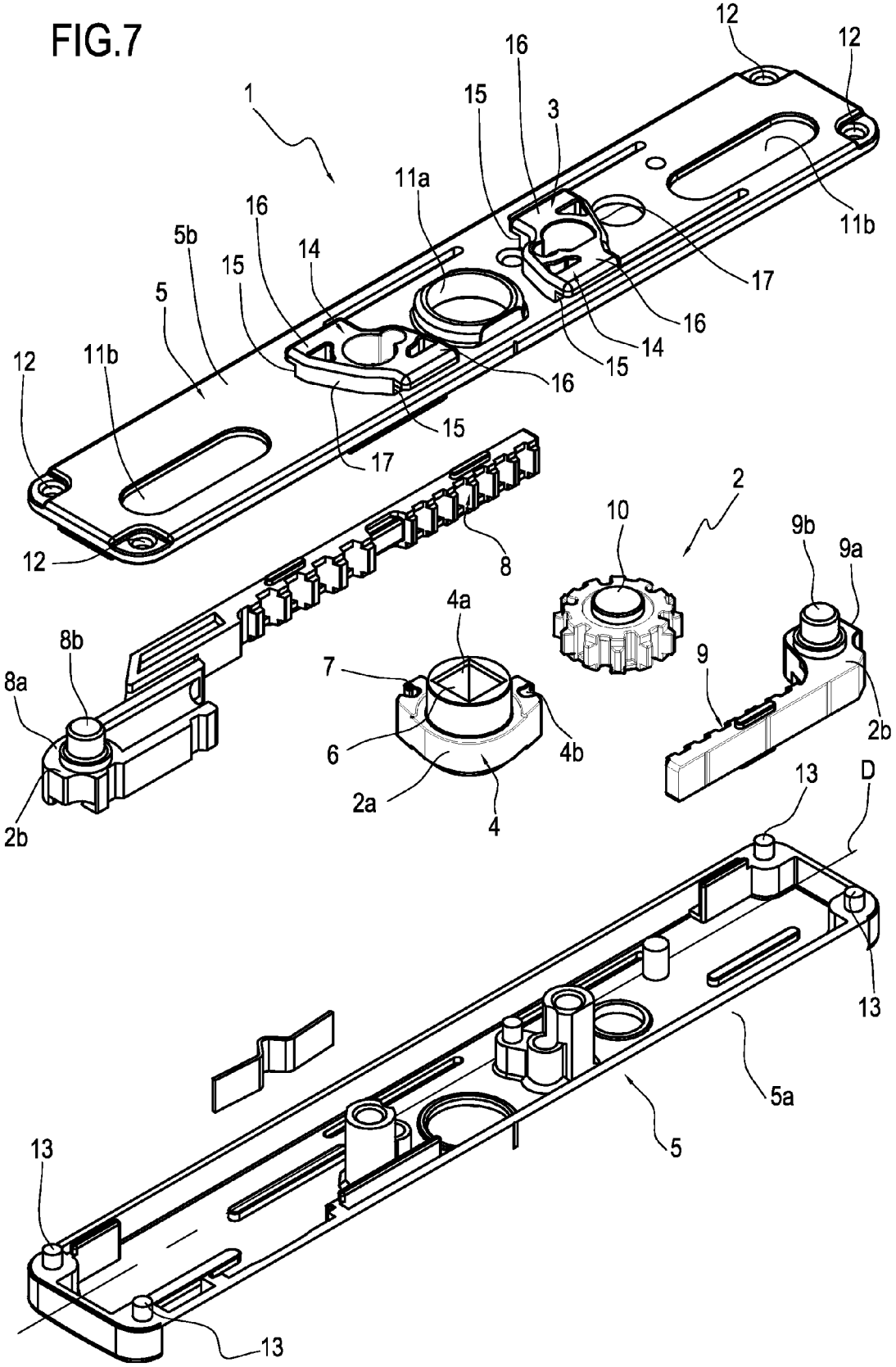
1
2
2a
2b
3
4
4a
4b
5
5a
5b
6
7
8
8a
8b
9
9a
9b
10
11a
11b
12
13
14
15
16
17
D

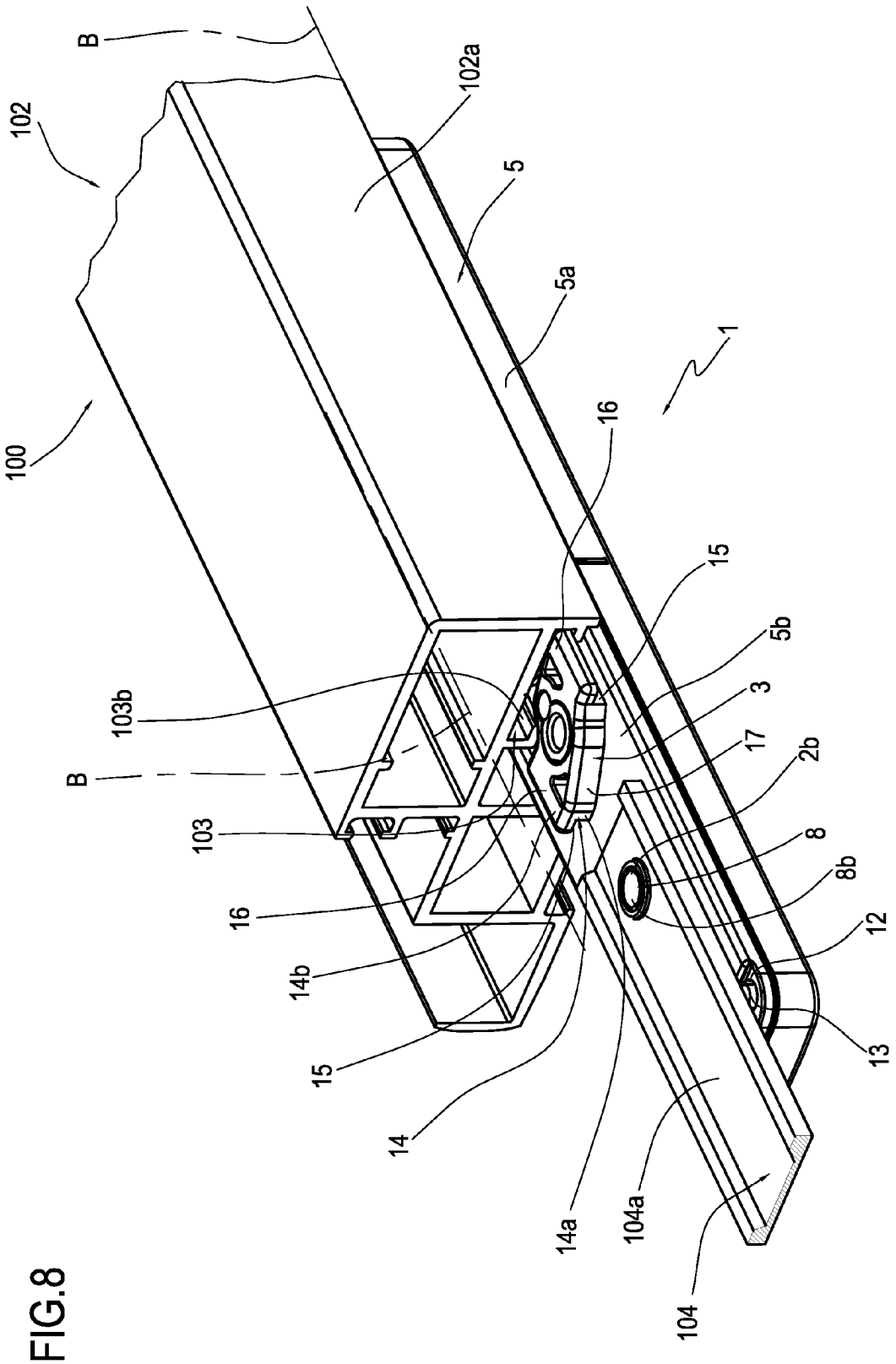
B
102
100
102a
5
5a
1
16
15
5b
3
17
2b
8
8b
12
13
104
104a
14a
14
15
14b
16
103
B
103b

FIG.8

FIG.9

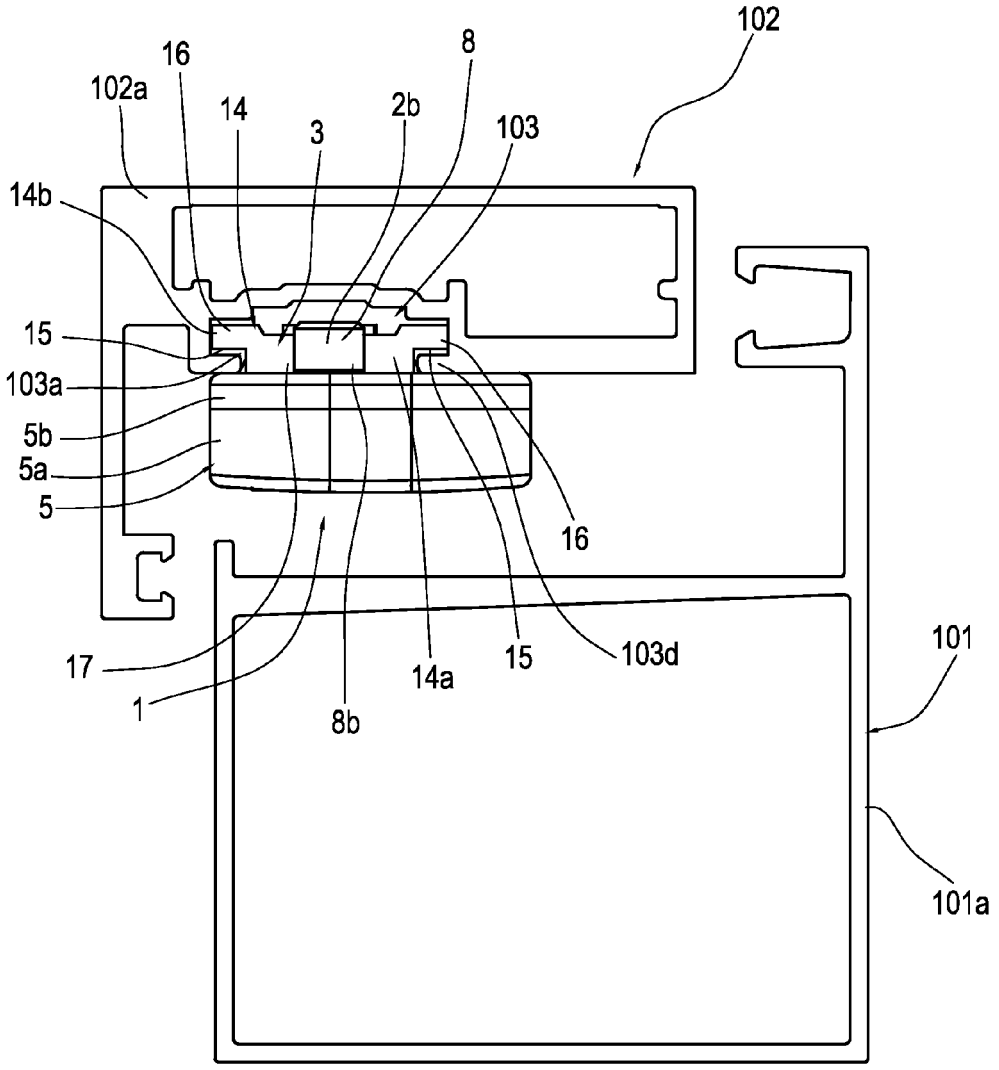
102
16
8
102a
14
2b
3
103
14b
15
103a
5b
5a
5
16
17
1
8b
14a
15
103d
101
101a

Europäisches Patentamt
European Patent Office
Office européen des brevets

EUROPEAN SEARCH REPORT

Application Number
EP 12 16 7488

DOCUMENTS CONSIDERED TO BE RELEVANT

Category	Citation of document with indication, where appropriate, of relevant passages	Relevant to claim	CLASSIFICATION OF THE APPLICATION (IPC)
X	WO 2007/147503 A1 (MASTER SRL [IT]; LOPERFIDO MICHELE [IT]) 27 December 2007 (2007-12-27) * page 4, line 28 - page 12, line 14; figures 1-6 *	1,2, 6-12, 17-19	INV. E05B9/08 E05C9/04 E05C9/10
X	DE 100 45 744 A1 (BOSCH GMBH ROBERT [DE]) 28 March 2002 (2002-03-28) * the whole document *	1,2, 6-12, 17-19	
X	DE 198 13 566 C1 (BOSCH GMBH ROBERT [DE]) 23 September 1999 (1999-09-23) * the whole document *	1,2, 6-12, 17-19	
X	FR 2 518 628 A1 (GEZE GMBH [DE]) 24 June 1983 (1983-06-24) * page 6, line 4 - page 9, line 6; figures 1-4 *	1,2, 6-12, 17-19	
X	EP 0 665 350 A1 (STEINBACH & VOLLMANN [DE]) 2 August 1995 (1995-08-02) * column 3, line 33 - column 4, line 46; figures 1-9 *	1,2,6-9, 17-19	TECHNICAL FIELDS SEARCHED (IPC) E05B E05C
A	DE 200 20 664 U1 (GRETSCH UNITAS GMBH [DE]) 1 March 2001 (2001-03-01) * page 7, line 9 - page 10, line 5; claims 7,8; figures 1-3 *	1,2,4-9, 13-18	
A,D	EP 2 175 095 A1 (SECURISTYLE LTD [GB]) 14 April 2010 (2010-04-14) * paragraph [0025] - paragraph [0038]; figures 1-10 *	1,6-13, 17,18	

-/--

The present search report has been drawn up for all claims

Place of search	Date of completion of the search	Examiner
The Hague	9 August 2012	Pérez Méndez, José F

CATEGORY OF CITED DOCUMENTS

X : particularly relevant if taken alone
Y : particularly relevant if combined with another document of the same category
A : technological background
O : non-written disclosure
P : intermediate document

T : theory or principle underlying the invention
E : earlier patent document, but published on, or after the filing date
D : document cited in the application
L : document cited for other reasons
& : member of the same patent family, corresponding document

1

EPO FORM 1503 03.82 (P04C01)

Europäisches Patentamt
European Patent Office
Office européen des brevets

EUROPEAN SEARCH REPORT

Application Number
EP 12 16 7488

DOCUMENTS CONSIDERED TO BE RELEVANT

Category	Citation of document with indication, where appropriate, of relevant passages	Relevant to claim	CLASSIFICATION OF THE APPLICATION (IPC)
A,D	WO 2008/065510 A2 (GSG INT SPA [IT]; LAMBERTINI MARCO [IT]) 5 June 2008 (2008-06-05) * page 1, line 7 - line 9 * -----	1,17	
			TECHNICAL FIELDS SEARCHED (IPC)

The present search report has been drawn up for all claims

1

Place of search	Date of completion of the search	Examiner
The Hague	9 August 2012	Pérez Méndez, José F

CATEGORY OF CITED DOCUMENTS

X : particularly relevant if taken alone
Y : particularly relevant if combined with another document of the same category
A : technological background
O : non-written disclosure
P : intermediate document

T : theory or principle underlying the invention
E : earlier patent document, but published on, or after the filing date
D : document cited in the application
L : document cited for other reasons

& : member of the same patent family, corresponding document

EPO FORM 1503 03.82 (P04C01)

ANNEX TO THE EUROPEAN SEARCH REPORT ON EUROPEAN PATENT APPLICATION NO. EP 12 16 7488

This annex lists the patent family members relating to the patent documents cited in the above-mentioned European search report.
The members are as contained in the European Patent Office EDP file on
The European Patent Office is in no way liable for these particulars which are merely given for the purpose of information.

09-08-2012

Patent document cited in search report		Publication date	Patent family member(s)			Publication date
WO 2007147503	A1	27-12-2007	AT	466158	T	15-05-2010
			EP	2029842	A1	04-03-2009
			ES	2345683	T3	29-09-2010
			HR	P20100407	T1	30-09-2010
			PT	2029842	E	02-08-2010
			WO	2007147503	A1	27-12-2007
DE 10045744	A1	28-03-2002	NONE			
DE 19813566	C1	23-09-1999	DE	19813566	C1	23-09-1999
			EP	0995000	A1	26-04-2000
			ES	2199552	T3	16-02-2004
			JP	2002500714	A	08-01-2002
			WO	9950518	A1	07-10-1999
FR 2518628	A1	24-06-1983	AT	377316	B	11-03-1985
			DE	3151224	A1	14-07-1983
			FR	2518628	A1	24-06-1983
EP 0665350	A1	02-08-1995	AT	167544	T	15-07-1998
			DE	4402480	A1	03-08-1995
			DK	665350	T3	06-04-1999
			EP	0665350	A1	02-08-1995
			ES	2120083	T3	16-10-1998
DE 20020664	U1	01-03-2001	AT	350556	T	15-01-2007
			DE	20020664	U1	01-03-2001
			EP	1211371	A1	05-06-2002
EP 2175095	A1	14-04-2010	CN	101725296	A	09-06-2010
			EP	2175095	A1	14-04-2010
WO 2008065510	A2	05-06-2008	CN	101589202	A	25-11-2009
			GB	2456286	A	15-07-2009
			US	2010058667	A1	11-03-2010
			WO	2008065510	A2	05-06-2008

EPO FORM P0459

For more details about this annex : see Official Journal of the European Patent Office, No. 12/82

REFERENCES CITED IN THE DESCRIPTION

This list of references cited by the applicant is for the reader's convenience only. It does not form part of the European patent document. Even though great care has been taken in compiling the references, errors or omissions cannot be excluded and the EPO disclaims all liability in this regard.

Patent documents cited in the description

- WO 2008065510 A **[0005] [0034]**
- EP 2175095 A **[0013] [0016] [0018] [0020]**