(19) Europäisches Patentamt
European Patent Office
Office européen des brevets

(11) **EP 2 537 968 A3**

(12) **EUROPEAN PATENT APPLICATION**

(88) Date of publication A3:
22.04.2015 Bulletin 2015/17

(43) Date of publication A2:
26.12.2012 Bulletin 2012/52

(21) Application number: **12159062.4**

(22) Date of filing: **12.03.2012**

(51) Int Cl.:
D01H 4/02 *(2006.01)* ***D01H 1/115*** *(2006.01)*

(84) Designated Contracting States:
AL AT BE BG CH CY CZ DE DK EE ES FI FR GB GR HR HU IE IS IT LI LT LU LV MC MK MT NL NO PL PT RO RS SE SI SK SM TR
Designated Extension States:
BA ME

(30) Priority: **20.06.2011 JP 2011136687**

(71) Applicant: **Murata Machinery, Ltd.**
Minami-ku
Kyoto-shi
Kyoto 601-8326 (JP)

(72) Inventors:
- **Sakamoto, Naotaka**
  Kyoto-shi, Kyoto 612-8686 (JP)
- **Matsui, Toshihiro**
  Kyoto-shi, Kyoto 612-8686 (JP)

(74) Representative: **Stöckeler, Ferdinand**
Schoppe, Zimmermann, Stöckeler
Zinkler, Schenk & Partner mbB
Patentanwälte
Radlkoferstrasse 2
81373 München (DE)

(54) Hollow guide shaft unit, air-jet spinning device and spinning machine

(57) A spindle unit (35) of a spinning device (9) includes a spindle (24), a holder main body (152), a lock member (153), and a spring section (183). The spindle (24) includes a tip-end portion (30) for receiving an insert of a twisted fiber bundle, and a fiber passage (85) for receiving a passing of the inserted fiber bundle. The holder main body (152) supports the spindle (24). The lock member (153) mechanically couples the spindle (24) with the holder main body (152). The spring section (183) generates force to act upon the spindle (24) so as to displace the tip-end portion (30) towards one side within a movable range under a state in which the spindle (24) is mechanically coupled with the holder main body (152) via the lock member (153), the movable range being a range in which the tip-end portion (30) of the spindle (24) can be moved.

FIG. 5

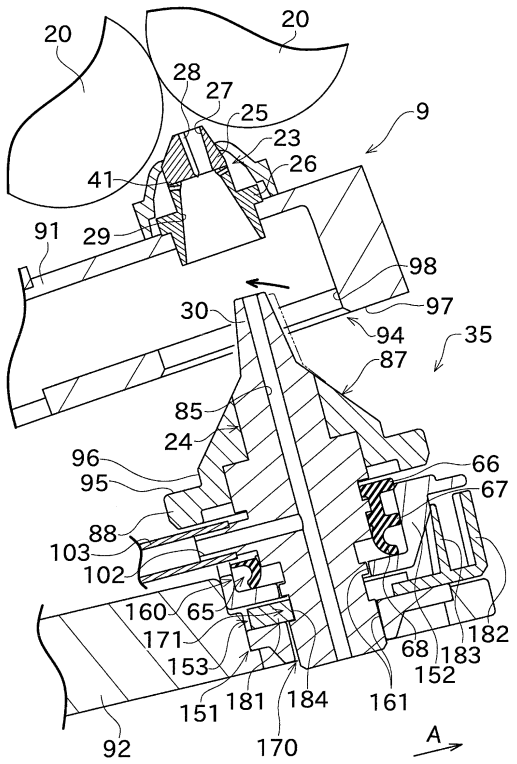

EP 2 537 968 A3

Europäisches Patentamt
European Patent Office
Office européen des brevets

EUROPEAN SEARCH REPORT

Application Number
EP 12 15 9062

DOCUMENTS CONSIDERED TO BE RELEVANT

Category	Citation of document with indication, where appropriate, of relevant passages	Relevant to claim	CLASSIFICATION OF THE APPLICATION (IPC)
A	JP 2011 038210 A (MURATA MACHINERY LTD) 24 February 2011 (2011-02-24) * figures 1-6 * * paragraph [0044] - paragraph [0061] * * paragraph [0066] - paragraph [0068] * -----	1-14	INV. D01H4/02 D01H1/115
A	EP 1 748 094 A1 (SAURER GMBH & CO KG [DE] OERLIKON TEXTILE GMBH & CO KG [DE]) 31 January 2007 (2007-01-31) * paragraph [0007] - paragraph [0012] * * paragraph [0022] - paragraph [0027] * * figure 2 * -----	1-14	
			TECHNICAL FIELDS SEARCHED (IPC)
			D01H

The present search report has been drawn up for all claims

Place of search	Date of completion of the search	Examiner
Munich	13 March 2015	Hausding, Jan

CATEGORY OF CITED DOCUMENTS

X : particularly relevant if taken alone
Y : particularly relevant if combined with another document of the same category
A : technological background
O : non-written disclosure
P : intermediate document

T : theory or principle underlying the invention
E : earlier patent document, but published on, or after the filing date
D : document cited in the application
L : document cited for other reasons

& : member of the same patent family, corresponding document

EPO FORM 1503 03.82 (P04C01)

ANNEX TO THE EUROPEAN SEARCH REPORT ON EUROPEAN PATENT APPLICATION NO. EP 12 15 9062

This annex lists the patent family members relating to the patent documents cited in the above-mentioned European search report. The members are as contained in the European Patent Office EDP file on
The European Patent Office is in no way liable for these particulars which are merely given for the purpose of information.

13-03-2015

Patent document cited in search report	Publication date	Patent family member(s)	Publication date
JP 2011038210 A	24-02-2011	CN 101994172 A	30-03-2011
		JP 2011038210 A	24-02-2011
EP 1748094 A1	31-01-2007	BR PI0602903 A	13-03-2007
		CN 1904164 A	31-01-2007
		DE 102005035049 A1	01-02-2007
		EP 1748094 A1	31-01-2007
		US 2007022729 A1	01-02-2007

EPO FORM P0459

For more details about this annex : see Official Journal of the European Patent Office, No. 12/82