(19) Europäisches Patentamt
European Patent Office
Office européen des brevets

(11) EP 2 578 136 B1

(12) **EUROPEAN PATENT SPECIFICATION**

(45) Date of publication and mention of the grant of the patent:
22.04.2015 Bulletin 2015/17

(21) Application number: **11789444.4**

(22) Date of filing: **31.05.2011**

(51) Int Cl.:
A47L 15/46 *(2006.01)* ***A47L 15/42*** *(2006.01)*
A47L 15/00 *(2006.01)*

(86) International application number:
PCT/JP2011/003026

(87) International publication number:
WO 2011/152030 (08.12.2011 Gazette 2011/49)

(54) **DISHWASHING MACHINE**

GESCHIRRSPÜLMASCHINE

LAVE-VAISSELLE

(84) Designated Contracting States:
AL AT BE BG CH CY CZ DE DK EE ES FI FR GB GR HR HU IE IS IT LI LT LU LV MC MK MT NL NO PL PT RO RS SE SI SK SM TR

(30) Priority: **01.07.2010 JP 2010150731**
01.06.2010 JP 2010125598

(43) Date of publication of application:
10.04.2013 Bulletin 2013/15

(73) Proprietor: **Panasonic Corporation**
Kadoma-shi
Osaka 571-8501 (JP)

(72) Inventors:
- **IKESHIMA, Mamoru**
2-1-61, Shiromi, Chuo-ku
Osaka 540-6207 (JP)
- **SHOJI, Akira**
2-1-61, Shiromi, chuo-ku
Osaka 540-6207 (JP)

(74) Representative: **Schwabe - Sandmair - Marx**
Patentanwälte
Stuntzstraße 16
81677 München (DE)

(56) References cited:
EP-A1- 2 578 137
JP-A- 2002 011 275
JP-A- 2005 115 089
JP-A- 2006 006 467
JP-A- 2008 131 973
JP-A- 8 117 174
JP-A- 2002 011 275
JP-A- 2005 115 089
JP-A- 2008 131 973
JP-A- 2010 066 873

Note: Within nine months of the publication of the mention of the grant of the European patent in the European Patent Bulletin, any person may give notice to the European Patent Office of opposition to that patent, in accordance with the Implementing Regulations. Notice of opposition shall not be deemed to have been filed until the opposition fee has been paid. (Art. 99(1) European Patent Convention).

EP 2 578 136 B1

Printed by Jouve, 75001 PARIS (FR)

Description

TECHNICAL FIELD

[0001] The present invention relates to a dishwashing machine.

BACKGROUND ART

[0002] A typical dishwashing machine, when used for a long time, undergoes thermal, chemical deterioration of its parts due to heating by its heater, a detergent, oil from washed objects, and other causes. Accordingly, it is desirable for a serviceperson to perform checkups on a dishwashing machine after a given number of operation times or operating time has been passed.

[0003] Usually, an electrical appliance from which reliability and safety are demanded stores power-on hours count and/or the number of operation times in a memory and automatically provides warning or display when given time or times is reached. A technique is disclosed that uses this manner to inform a user of inspection timing of the dishwashing machine and to prompt the user to perform preventive maintenance (refer to patent literature 1 for instance).

[0004] In other words, a conventional dishwashing machine detects power-on hours count and/or the number of operation times to provide warning and/or display of inspection timing. Further, when the memory is replaced because of failure or repair, even when given operating time or the number of operation times is not reached, a serviceperson for instance reads operating time or the number of operation times from the memory and writes such information to a new memory through external operation, which allows such information before the memory replacement to be transferred. The conventional technique allows a serviceperson to operate a switch (e. g. button) for controlling operation of the product; to read operating time or the number of operation times; and to write such information to a new memory when repairing.

[0005] However, a user can operate a switch (e.g. button) for controlling operation of the product, and thus the user may accidentally rewrite operating time or the number of operation times. Further, a display unit for displaying operating time or the number of operation times, which are unnecessary information for the user, is provided on the outer covering of the dishwashing machine, which undesirably decreases operability.

Citation List

Patent Literature

[0006] **PTL 1** Japanese Patent No. 2666363

[0007] JP 2008-131973 A relates to a controller and a maintenance support system. A control means for controlling a washing process, a rinsing process and a drying process is provided, and the control means has a non-volatile storage means for storing the plurality of numbers of times of operations. When one of the numbers of times of the operations exceeds the prescribed number of times, by changing all the numbers of times of the operations to the numbers of times of the operations multiplied by a prescribed coefficient, the numbers of times of the operations can be stored into the storage means with a fixed storage capacity even when the plurality of them are stored for each of operation conditions. Since the ratio of the respective numbers of times of the operations is recognized, the feature of the numbers of times of the operations for each of the operation conditions is not lost. A maintenance service person can give the appropriate judgement and explanation corresponding to user's operation situations.

[0008] JP 2005-115089 A relates to an image forming apparatus. The image forming apparatus which, when an error occurs, informs a user of the error is provided with: an operation part through which specific operation settings are inputted; an error detection means for detecting the causes of the occurrence of the error; and a control part which controls the input mode of the operation part and responds to the specific operation settings inputted through the operation part and sets the operation set value corresponding to the input. The control part responds to a first operation and controls the operation part in a first set input mode in which the operation set value is set. Even when the error detection means has detected the causes of the occurrence of the error, the setting of the first operation set value which is inputted through the operation part is made effective by the control part. In the first set input mode, since the setting of the operation set value inputted through the operation part is made effective even when the causes of the occurrence of the error have been detected, the set value can be changed even when the error is caused at the time of shipment from a factory or after the replacement of a component unit.

SUMMARY OF THE INVENTION

[0009] It is an object of the present invention to provide an improved and useful dishwashing machine in which the above-mentioned problems are eliminated.

[0010] In order to achieve the above-mentioned object, there is provided a dishwashing machine according to claim 1.

[0011] Advantageous embodiments are defined by the dependent claims.

[0012] A dishwashing machine of the present invention includes an operation unit for receiving an input of instructions to the dishwashing machine; a control unit for controlling operation of the dishwashing machine according to control information having been input to the operation unit, the control unit being covered with a cover; and a display unit for displaying operation conditions of the dishwashing machine. The control unit has a memory from which information about an operation process state

can be read and to which the information can be written; and a memory control unit for making the display unit display the information written in the memory, where the memory control unit is operated with the cover detached.

[0013] This configuration prevents a user from operating the memory control unit and rewriting operating time or the number of operation times, which allows informing the user of correct timing requiring inspection and repair of the dishwashing machine.

BRIEF DESCRIPTION OF DRAWINGS

[0014]

FIG. 1 is a longitudinal sectional view of a dishwashing machine according to the first exemplary embodiment of the present invention.

FIG. 2 is a block diagram illustrating the control unit of the dishwashing machine according to the same embodiment.

FIG. 3 is a flowchart showing operation of the dishwashing machine according to the same embodiment.

FIG. 4 is a longitudinal sectional view of a dishwashing machine according to the second exemplary embodiment of the present invention.

DESCRIPTION OF EMBODIMENTS

[0015] Hereinafter, a description is made of some exemplary embodiments of the present invention with reference to the related drawings. The scope of the present invention is not limited by the exemplary embodiments.

FIRST EXEMPLARY EMBODIMENT

[0016] Hereinafter, a description is made of a dishwashing machine according to the first exemplary embodiment of the present invention using FIG. 1. FIG. 1 is a longitudinal sectional view of the dishwashing machine.

[0017] As shown in FIG. 1, cabinet 1 of a dishwashing machine built into an integrated kitchen system is equipped with wash tub 4 having opening 2 on its top, for containing and washing tableware 3. Wash tub 4, connected to water supply piping through feed water unit 5, is fed thereinto with water during operation. Cabinet 1 of the main unit of the dishwashing machine is provided on its front surface with operation unit 6 for power on/off and for selection of a washing pattern for instance and with display unit 7 for displaying operation conditions of the dishwashing machine. Here, operation conditions mean an operation cycle such as wash, rinse, and dry; and information written into memory 22.

[0018] Wash tub 4 is provided extractably back-and-forth (the arrow direction in the figure) along rail 8 laid substantially (or exactly) horizontally on both inner sides of cabinet 1.

[0019] Wash tub 4 has dish rack 9 placed therein for containing tableware 3 and is rotatably provided thereunder with wash nozzle 10. Wash tub 4 is provided therein with heating unit 11 (e.g. electric heater) for heating washing water and in the bottom with drain opening 12. Further, wash tub 4 has temperature sensor 13 (e.g. thermistor) for sensing temperature inside wash tub 4; and wash pump 15 including motor 14 for sending washing water staying at drain opening 12 to wash nozzle 10, both placed outside wash tub 4. Then, wash pump 15 circulates washing water staying at drain opening 12 to make wash nozzle 10 spray washing water to wash tableware 3

[0020] As shown in FIG. 1, cabinet 1 has lid 16 for closing opening 2 placed on its top. Lid 16 is supported vertically movably by a right-and-left pair of parallel link mechanism 17 including a front-and-rear pair of links. Lid 16 has sealing material 18 (elastic body) for sealing opening 2 of wash tub 4 fixed thereto. Lid 16 is retracted upward so that sealing material 18 of lid 16 does not interfere with the back-and-forth movement of wash tub 4 when wash tub 4 has been extracted.

[0021] The dishwashing machine has an air outlet (not shown) for discharging air inside wash tub 4 of the dishwashing machine and air-blowing unit 20 for supplying outside air to the inside of wash tub 4. To dry tableware 3, damp air inside wash tub 4 is discharged outside wash tub 4 through the air outlet. Wash tub 4 has control unit 21 for controlling operation of the dishwashing machine, disposed on the front surface of the front wall of wash tub 4.

[0022] Hereinafter, a description is made of the control unit of a dishwashing machine of the present invention using FIG. 2. FIG. 2 is a block diagram illustrating the control unit according to the same embodiment.

[0023] As shown in FIG. 2, control unit 21 includes at least memory 22 for successively controlling the cycles of wash, rinse, and dry; state sensor 24; and memory control unit 23 for making display unit 7 display the information. As shown in FIG. 1, control unit 21 is covered with cover 25 provided on the front surface of the main unit of the dishwashing machine. Here, memory 22 is capable of recording the information about an operation process state as well as reading, writing, and deleting such information. State sensor 24 writes information about an operation process state for every operation to memory 22. Memory control unit 23, by being operated with cover 25 detached, makes display unit 7 display the information written in memory 22.

[0024] Here, information about an operation process state described above refers to the number of operation times, operating time, or the number of times temperature sensor 13 has detected that temperature inside wash tub 4 has reached a given value, at least one of which is set to memory 22. Performing given operation on operation unit 6 or on at least memory control unit 23 makes display unit 7 display the information about an operation process state. Further, operating operation unit 6 or memory control unit 23 allows the information about a new operation process state to be written in memory 22.

[0025] Hereinafter, a description is made of a configuration, operation, and effects of control unit 21 according to the exemplary embodiment of the present invention using FIG. 3. FIG. 3 is a flowchart showing operation of a dishwashing machine according to the same embodiment.

[0026] As shown in FIG. 3, a user first operates operation unit 6 to start operation.

[0027] Next, check whether information A about an operation process state (hereinafter, abbreviated as "operation process state A") is recorded in memory 22 (step S1). If the dishwashing machine is unused (immediately after factory shipment, N at step S1), operation process state A is not recorded. Then, check operation process state B (step S2). For control unit 21 shipped in a state of a product, a given value has been preliminarily input in operation process state B during production. Hence, operation process state B is determined to be present at step S2.

[0028] Next, add operation process state A and operation process state B to determine operation process state C. Then, check if operation process state C is less than given value X (step S3). Here, if operation process state C is less than value X, which means that inspection is not yet necessary (Y at step S3), execute operation for each cycle of wash, rinse, and dry (step S4). Then, write the added value of the number of operation times or operating time to operation process state A in memory 22 and terminate operation (step S5).

[0029] Here, given value X refers to the number of operation times, operating time, or the number of times temperature sensor 13 has detected that temperature inside wash tub 4 has reached a given value, when inspection by a serviceperson is required due to a long-term use of the dishwashing machine. At least one of the items is set in memory 22. Given value X is conceptually expressed so, but not limited to one value; more than one values of the above items may be used concurrently.

[0030] When the dishwashing machine is used for the first time, operation process state A is not present (N at step S1), and thus execute step S2 for checking operation process state B. Once the dishwashing machine is operated, however, the number of operation times or operating time is added to operation process state A, and thus the operation process state A is present (Y at step S1). Accordingly, step S2 for checking operation process state B is not executed from the next operation of the dishwashing machine.

[0031] When operation process state C becomes given value X or higher at step S3 due to a long-term use of the dishwashing machine (N at step S3), determination is made that the dishwashing machine requires inspection, and the process flow moves to the inspection notice mode for informing a user of inspection timing with warning or display (step S6).

[0032] Here, if memory 22 does not contain operation process state A or B (N at step S2), the memory failure mode for informing a user or serviceperson of a failure with sound or LED display for instance is executed; regular operation is not executed (step S7).

[0033] Hereinafter, a description is made of a case of replacing control unit 21 due to failure or for repair of the dishwashing machine. At this moment, as memory 22 for repair/replacement included in control unit 21, memory 22 that does not contain operation process state A or B is used.

[0034] Before replacing memory 22, a serviceperson first performs given operation on operation unit 6 or on memory control unit 23 through an operation button for instance to make display unit 7 display operation process state C. Then, the serviceperson records the number of operation times or operating time displayed on display unit 7 in a memo or something.

[0035] Next, the serviceperson detaches control unit 21 that has been attached to the dishwashing machine and installs new control unit 21 on the dishwashing machine.

[0036] Next, the serviceperson performs given operation on at least memory control unit 23 through an operation button for instance to write the number of operation times or operating time of operation process state C (i. e. a sum of operation process states A and B) recorded before replacement to memory 22. After that, the serviceperson checks if regular operations such as wash, rinse, and dry works. In other words, if control unit 21 has been properly replaced, determination is made at step S2 for checking operation process state B that the operation process state B is present, and thus the dishwashing machine can perform regular operation from this time.

[0037] Meanwhile, if a process of writing to memory 22 is omitted or forgotten, operation process state B is not present, and thus determination is made at step S2 for checking operation process state B that the operation process state B is not present. Consequently, the process flow moves to step S7 to activate the memory failure mode for warning with sound or display unit 7 for instance when checking operation after replacing control unit 21. This action informs the serviceperson that the information about an operation process state has not been transferred.

[0038] In other words, if the information about an operation process state has not been transferred when replacing control unit 21 due to failure or for repair, operation of the memory failure mode disables subsequent use of the dishwashing machine. Accordingly, operation of the memory failure mode informs the serviceperson of the situation, which inevitably transfers the information about an operation process state to new control unit 21.

[0039] Conventionally, if the information about an operation process state has not been transferred when replacing a control unit, inspection-required timing is not sometimes reliably reported to a user. With a dishwashing machine of this exemplary embodiment, however, operation of the memory failure mode informs so that the information about an operation process state is reliably transferred, and thus timing when inspection and repair

are required can be informed to a user properly and reliably.

[0040] At this moment, to properly transfer the information about an operation process state, memory 22 needs to store the information about a proper operation process state. For this reason, memory control unit 23 is disposed in control unit 21 and control unit 21 is covered with cover 25 so that memory control unit 23 becomes operable only after a serviceperson detaches cover 25. In other words, covering memory control unit 23 with cover 25 prevents a user from operating memory control unit 23. This structure prevents the information about an operation process state in memory 22 from being accidentally changed, thereby allowing such the information about a correct operation process state to be stored in memory 22. This results in implementing a highly reliable dishwashing machine that reliably informs a user of timing when inspection and repair are required.

[0041] According to this exemplary embodiment, display unit 7 is placed on the front surface of the main unit of a dishwashing machine, which allows a user to check display for operation cycles for instance even while the dishwashing machine is being used, thereby increasing the operability (usability) of the dishwashing machine for the user.

[0042] According to this exemplary embodiment, operation unit 6 is placed on the front surface of the main unit of a dishwashing machine, which allows a serviceperson to read the information written in memory 22 even while the dishwashing machine is operating, thereby increasing the operability (usability) of the dishwashing machine for the serviceperson.

SECOND EXEMPLARY EMBODIMENT

[0043] Hereinafter, a description is made of a dishwashing machine according to the second exemplary embodiment of the present invention using FIG. 4. FIG. 4 is a longitudinal sectional view of the dishwashing machine according to the second exemplary embodiment of the present invention.

[0044] As shown in FIG. 4, the dishwashing machine of this exemplary embodiment is different from that of the first exemplary embodiment in that display unit 7 of the first exemplary embodiment is separated into first display unit 33 and second display unit 34, where first display unit 33 displays operation cycles such as wash, rinse, and dry; second display unit 34 displays the information written in memory 22. Other components and their effects are basically the same as those of the first exemplary embodiment, and thus their descriptions are omitted. In other words, descriptions other than the above can be made by reading display unit 7 of the first exemplary embodiment as first display unit 33 and second display unit 34.

[0045] Specifically, as shown in FIG. 4, second display unit 34 is placed on control unit 21 that is covered with cover 25 provided over the entire surface of the main unit of the dishwashing machine and cannot be touched by a user. When a serviceperson detaches cover 25 to perform given operation on operation unit 6 or on memory control unit 23 through an operation button for instance due to failure or for repair of the dishwashing machine, second display unit 34 displays the information about an operation process state for instance recorded in memory 22, described above. The serviceperson replaces control unit 21 according to this information. Here, it does not matter whether first display unit 33 is covered with cover 25 or not.

[0046] This prevents the information about an operation process state written in memory 22 to be changed by a user. Further, first display unit 33, which is a display unit usually viewed by a user, is simplified to display images easy- to- understand for a user.

[0047] Separating display the information into that on operation cycles and that having been written into memory 22 enables forming an easy-to-understand display unit, which prevents misrecognition of operation cycles by a user to enable reliable operation of the dishwashing machine.

[0048] Masking second display unit 34, unnecessary for a user in a regular use, with cover 25 implements an easy-to-use dishwashing machine.

[0049] In repair or inspection of a dishwashing machine, displaying the information about an operation process state on second display unit 34 that can be dedicated to a serviceperson allows a serviceperson to perform inspection and repair of the dishwashing machine reliably and efficiently.

[0050] This exemplary embodiment allows a serviceperson to delete the information about an operation process state stored in memory 22 by performing given operation on operation unit 6 or on at least memory control unit 23 through an operation button for instance. This mechanism allows deleting and rewriting the information about an operation process state when writing new information about an operation process state into memory 22 of control unit 21 or when having written incorrect information.

[0051] In this exemplary embodiment, the description is made of an example where the information about an operation process state is read and written by performing given operation on operation unit 6 or on at least memory control unit 23 to read the information through display unit 7 or second display unit 34, but not limited to this case. For example, the following steps may be followed. That is, a connector that can connect memory 22 with an external device is disposed on control unit 21. A serviceperson connects a given external device to the connector to read and write the information in memory 22. This mechanism allows transferring more information. At the same time, even if control unit 21 is in failure and the power to the dishwashing machine cannot be turned on, memory 22 is connected to an external device through the connector to allow the information to be read from memory 22 and to be written in memory 22.

[0052] In this exemplary embodiment, the description is made of an example where memory 22 cannot be detached from control unit 21 to reduce production costs, but not limited to this example. For instance, to make work by a serviceperson simpler, memory 22 may be detachable, which facilitates replacement of the memory to improve workability and transferring all information.

[0053] In this exemplary embodiment, the description is made of an example where information written in memory 22 is displayed on second display unit 34 through either operation of operation unit 6 or memory control unit 23, but not limited to this example. For instance, it is preferable to make second display unit 34 display the information only through memory control unit 23. This is because a user may accidentally rewrite information in memory 22 through the same switch operation in the case where second display unit 34 displays the information through operation unit 6. Further, the information about an operation process state written in memory 22 is displayed on second display unit 34, which cannot be viewed while a user is using the dishwashing machine, and thus the user may rewrite the information without the user's being aware of the state of the rewrite mode.

[0054] Thus, the mechanism that makes second display unit 34 display the information through operation on memory control unit 23 completely eliminates the possibility that a user will incorrectly rewrite the information as described above, thereby implementing a further reliable dishwashing machine.

INDUSTRIAL APPLICABILITY

[0055] The present invention is applicable to the technical field of electrical appliances such as a dishwashing machine, heating device, and cooking appliance that are demanded that they prevent improper use by a user and notify the user of timing when inspection and repair are required.

REFERENCE MARKS IN THE DRAWINGS

[0056]

1 Cabinet
2 Opening
3 Tableware
4 Wash tub
5 Feed water unit
6 Operation unit
7 Display unit
8 Rail
9 Dish rack
10 Wash nozzle
11 Heating unit
12 Drain opening
13 Temperature sensor
14 Motor
15 Wash pump
16 Lid
17 Parallel link mechanism
18 Sealing material
20 Air-blowing unit
21 Control unit
22 Memory
23 Memory control unit
24 State sensor
25 Cover
33 First display unit
34 Second display unit

Claims

1. A dishwashing machine comprising:

an operation unit (6) for receiving an input of an instruction to the dishwashing machine;
a control unit (21) for controlling operation of the dishwashing machine according to control information having been input to the operation unit (6), the control unit (21) being covered with a cover (25); and
a display unit (7) for displaying an operation condition of the dishwashing machine,

wherein the control unit (21) includes:

a memory (22) capable of reading information therefrom and writing information therein about an operation process state (A, B, C); and
a memory control unit (23) for making the display unit (7) display the information written in the memory (22), **characterized in that**:

- the memory control unit (23) is configured to be operated with the cover (25) detached;
the display unit (7) includes a first display unit (33) that is not covered with the cover (25) and a second display unit (34) that is covered with the cover (25),
the first display unit (33) displays an operation cycle of the dishwashing machine and the second display unit (34) displays the information written in the memory (22), and

the second display unit (34) displays the information through operation of the operation unit (6) or of the memory control unit (23).

2. The dishwashing machine of claim 1, wherein the display unit (7) is disposed on a front surface of a main unit of the dishwashing machine.

3. The dishwashing machine of claim 1, wherein the operation unit (6) is disposed on a front surface of a main unit of the dishwashing machine.

Patentansprüche

1. Geschirrspülmaschine, aufweisend:

eine Bedienungseinheit (6) zum Empfangen bzw. Bekommen einer Eingabe von einer Instruktion an die Geschirrspülmaschine;
eine Steuer- bzw. Regeleinheit (21) zum Steuern bzw. Regeln des Betriebs bzw. der Funktion von der Geschirrspülmaschine gemäß Steuer- bzw. Regelinformationen, die in die Bedienungseinheit (6) eingegeben worden sind, wobei die Steuer- bzw. Regeleinheit (21) mit einer Abdeckung (25) abgedeckt ist;
und
eine Anzeigeeinheit (7) zum Anzeigen eines Betriebszustands bzw. einer Betriebsbedingung von der Geschirrspülmaschine,
wobei die Steuer- bzw. Regeleinheit (21) enthält:

einen Speicher (22), der imstande ist, Informationen daraus zu lesen und Informationen darin zu schreiben, und zwar über einen Betriebsprozesszustand (A, B, C); und
eine Speichersteuer- bzw. Speicherregeleinheit (23) zum Veranlassen der Anzeigeeinheit (7), die in den Speicher (22) geschriebenen Informationen anzuzeigen, **dadurch gekennzeichnet dass**:

die Speichersteuer- bzw. Speicherregeleinheit (23) konfiguriert ist, um mit der abgenommenen Abdeckung (25) betätigt zu werden;
die Anzeigeeinheit (7) eine erste Anzeigeeinheit (33), die nicht mit der Abdeckung (25) bedeckt ist, und eine zweite Anzeigeeinheit (34) enthält, die mit der Abdeckung (25) bedeckt ist,
die erste Anzeigeeinheit (33) einen Betriebszyklus von der Geschirrspülmaschine anzeigt, und die zweite Anzeigeeinheit (34) die Informationen anzeigt, die in den Speicher (22) geschrieben sind, und
die zweite Anzeigeeinheit (34) die Informationen durch Betätigung von der Bedienungseinheit (6) oder von der Speichersteuer- bzw. Speicherregeleinheit (23) anzeigt.

2. Geschirrspülmaschine von Anspruch 1, wobei die Anzeigeeinheit (7) auf einer vorderen Oberfläche bzw. Frontoberfläche von einer Haupteinheit von der Geschirrspülmaschine angeordnet ist.

3. Geschirrspülmaschine von Anspruch 1, wobei die Bedienungseinheit (6) auf einer vorderen Oberfläche bzw. Frontoberfläche von einer Haupteinheit von der Geschirrspülmaschine angeordnet ist.

Revendications

1. Machine à laver la vaisselle comportant :

une unité de commande (6) pour recevoir la saisie d'une consigne donnée à la machine à laver la vaisselle ;
une unité de contrôle (21) pour contrôler le fonctionnement de la machine à laver la vaisselle en fonction de l'information de contrôle saisie dans l'unité de commande (6), l'unité de contrôle (21) étant couverte par un couvercle (25) ;
et
une unité d'affichage (7) pour afficher un état de fonctionnement de la machine à laver la vaisselle,

où l'unité de contrôle (21) comprend :

une mémoire (22) capable de lire des informations provenant de l'unité et d'y écrire des informations sur l'état d'un processus de fonctionnement (A, B, C) et
une unité de contrôle de la mémoire (23) pour faire afficher par l'unité d'affichage (7) l'information écrite dans la mémoire (22), **caractérisée en ce que**
l'unité de contrôle de la mémoire (23) est configurée pour fonctionner quand le couvercle (25) est enlevé ;
l'unité d'affichage (7) comprend une première unité d'affichage (33) qui n'est pas couverte par le couvercle (25) et une deuxième unité d'affichage (34) qui est couverte par le couvercle (25),
la première unité d'affichage (33) affiche un cycle de fonctionnement de la machine à laver la vaisselle et la deuxième unité d'affichage (34) affiche l'information écrite dans la mémoire (22), et
la deuxième unité d'affichage (34) affiche l'information via l'unité de commande (6) ou l'unité de contrôle de la mémoire (23).

2. Machine à laver la vaisselle selon la revendication 1, où l'unité d'affichage (7) est disposée sur une surface avant d'une unité principale de la machine à laver la vaisselle.

3. Machine à laver la vaisselle selon la revendication 1, où l'unité de commande (6) est disposée sur une surface avant d'une unité principale de la machine à laver la vaisselle.

FIG. 1

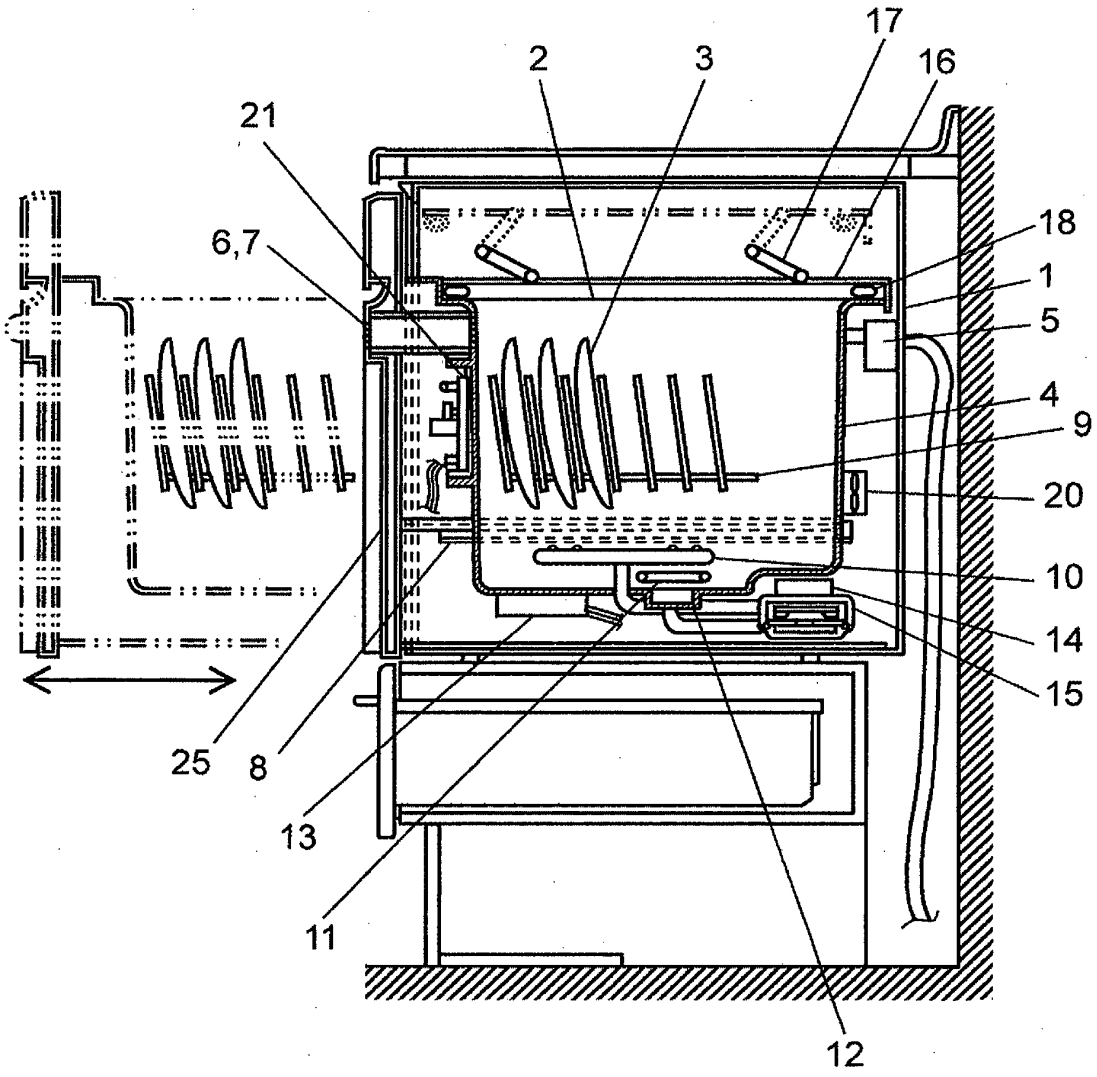

FIG. 2

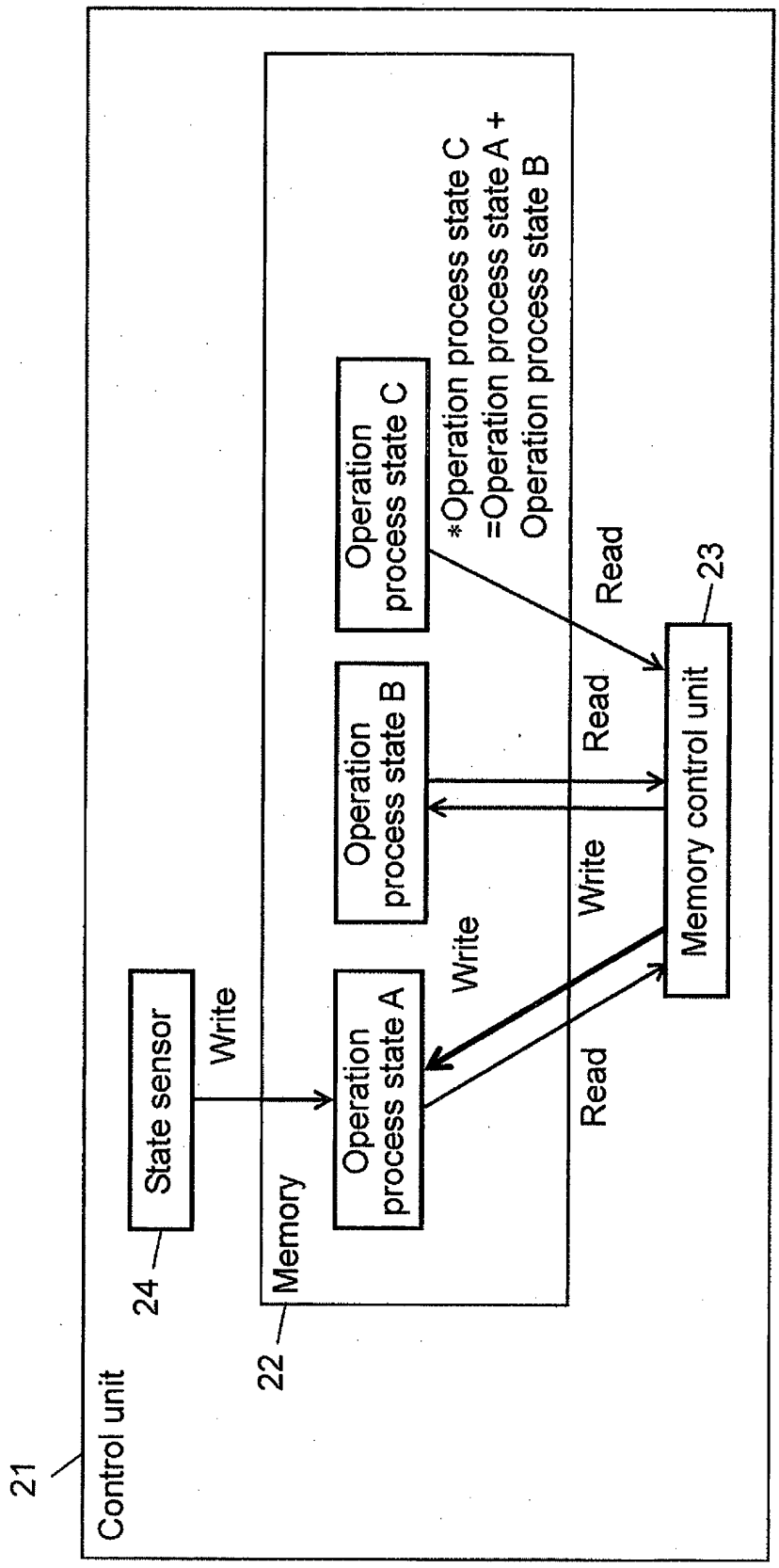
Control unit
21
State sensor
24
Write
Memory
22
Operation process state A
Operation process state B
Operation process state C
*Operation process state C
=Operation process state A +
Operation process state B
Write
Write
Read
Read
Read
Memory control unit
23

FIG. 3

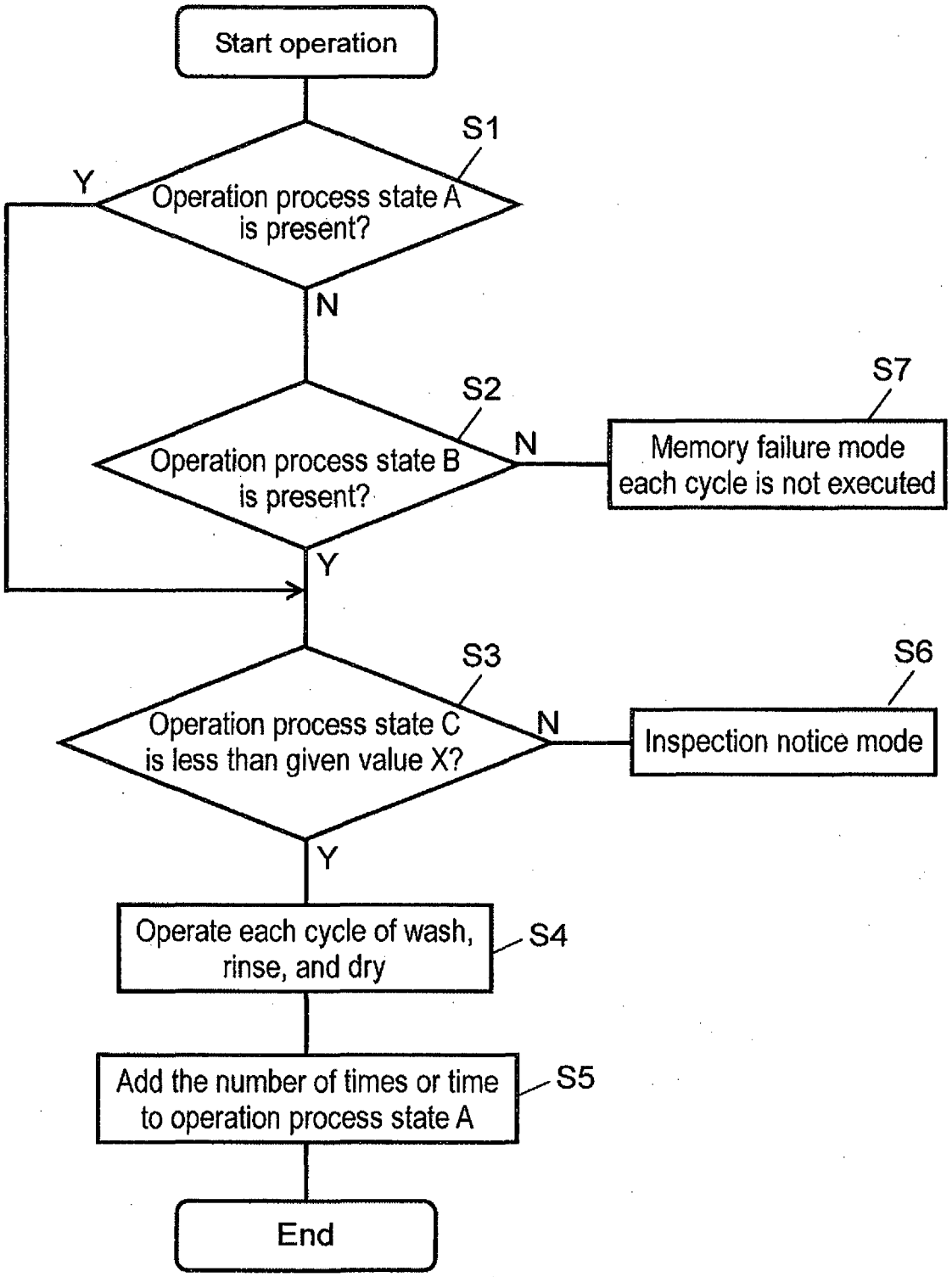
Start operation
S1
Operation process state A is present?
Y
N
S2
Operation process state B is present?
N
S7
Memory failure mode each cycle is not executed
Y
S3
Operation process state C is less than given value X?
N
S6
Inspection notice mode
Y
Operate each cycle of wash, rinse, and dry
S4
Add the number of times or time to operation process state A
S5
End

FIG. 4

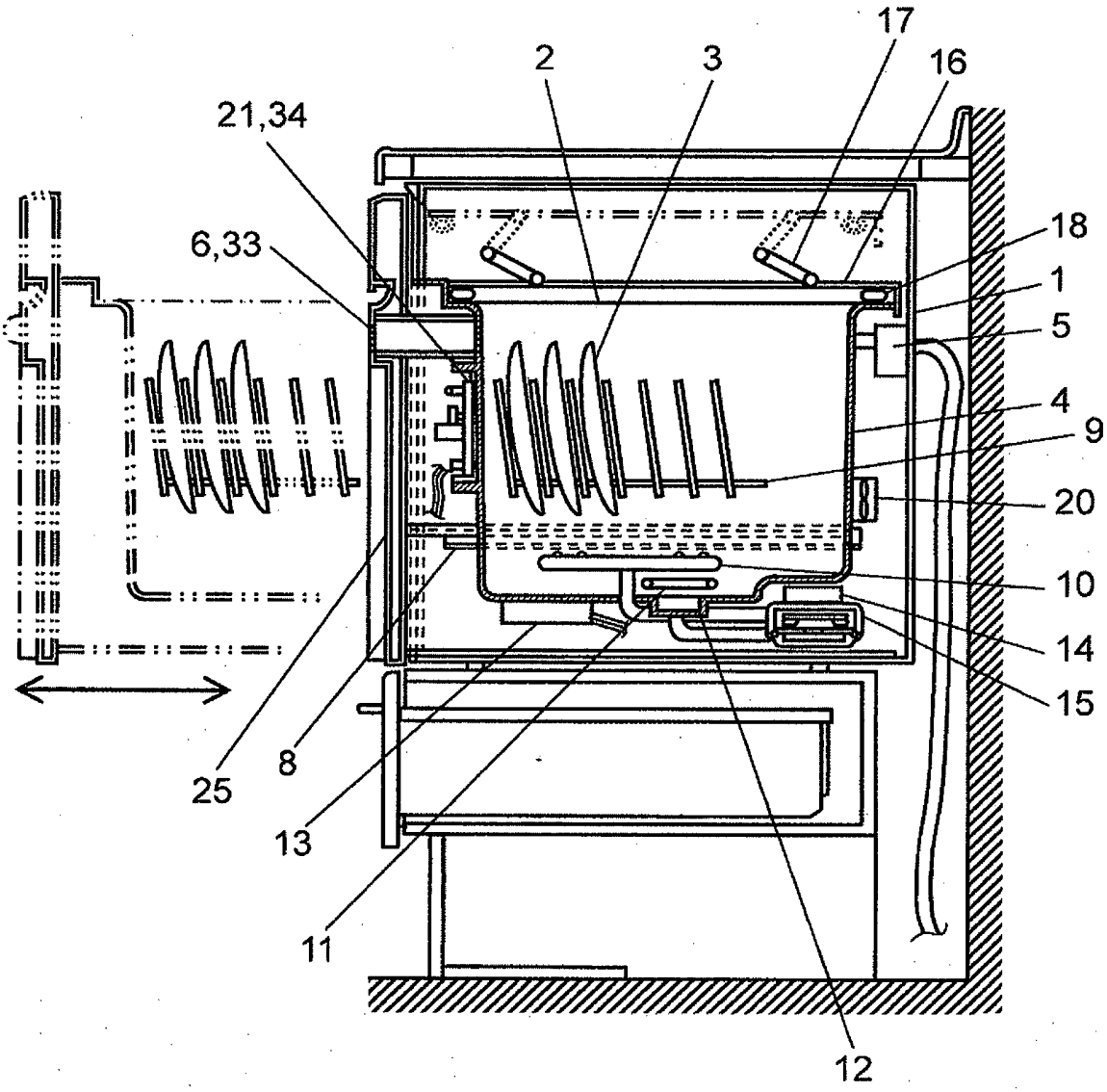

REFERENCES CITED IN THE DESCRIPTION

This list of references cited by the applicant is for the reader's convenience only. It does not form part of the European patent document. Even though great care has been taken in compiling the references, errors or omissions cannot be excluded and the EPO disclaims all liability in this regard.

Patent documents cited in the description

- JP 2666363 B **[0006]**
- JP 2008131973 A **[0007]**
- JP 2005115089 A **[0008]**