(19) Europäisches Patentamt
European Patent Office
Office européen des brevets

(11) **EP 2 579 762 B1**

(12) **EUROPEAN PATENT SPECIFICATION**

(45) Date of publication and mention of the grant of the patent:
30.04.2014 Bulletin 2014/18

(21) Application number: **11723977.2**

(22) Date of filing: **08.06.2011**

(51) Int Cl.:
A47L 15/42 *(2006.01)*

(86) International application number:
PCT/EP2011/059461

(87) International publication number:
WO 2011/154438 (15.12.2011 Gazette 2011/50)

(54) A DISHWASHER

GESCHIRRSPÜLMASCHINE

MACHINE À LAVER LA VAISSELLE

(84) Designated Contracting States:
AL AT BE BG CH CY CZ DE DK EE ES FI FR GB GR HR HU IE IS IT LI LT LU LV MC MK MT NL NO PL PT RO RS SE SI SK SM TR

(30) Priority: **08.06.2010 TR 201004623**

(43) Date of publication of application:
17.04.2013 Bulletin 2013/16

(73) Proprietor: **Arçelik Anonim Sirketi**
34950 Istanbul (TR)

(72) Inventors:
- **BASTUJI, Ismail, Cem**
  34950 Istanbul (TR)
- **KAHRAMAN, Erkan**
  34950 Istanbul (TR)

(56) References cited:
CA-A1- 2 192 269
DE-A1- 3 541 758
FR-A7- 2 129 418
US-A1- 2004 177 866

Note: Within nine months of the publication of the mention of the grant of the European patent in the European Patent Bulletin, any person may give notice to the European Patent Office of opposition to that patent, in accordance with the Implementing Regulations. Notice of opposition shall not be deemed to have been filed until the opposition fee has been paid. (Art. 99(1) European Patent Convention).

EP 2 579 762 B1

Printed by Jouve, 75001 PARIS (FR)

Description

[0001] The present invention relates to a front-loading dishwasher.

[0002] The washing tub disposed in the dishwasher comprises a ceiling, a rear wall, two side walls (5'), a base and an all-around flange extending from the base towards the side walls (5') and the rear wall. The front-loading dishwashers comprise a door mounted so as to be opened by being rotated around an axis horizontal to the washing tub in order to cover the loading/unloading opening on the washing tub. A gasket (10') is used in order to provide leak-proofing between the door and the washing tub.

[0003] In the state of the art embodiments, the gasket (10') is mounted to the washing tub so as to be seated onto the door in the closed position by being pressed between the washing tub and a retainer (11') secured to the washing tub edges near the door. The gasket (10') is shaped as a strip placed so as to provide leak-proofing over the ceiling, the side walls and the flange.

[0004] In a state of the art embodiment, the retainer (11') is shaped as a flat plate. In this embodiment, a bearing surface (12') that supports the gasket (10') from behind is formed by forming the region on the washing tub edges near the door onto which the gasket (10') is mounted. The retainer (11') is secured to the washing tub so as to be perpendicular to the bearing surface (12') and parallel to the wall onto which it is mounted. Thus, the gasket (10') is supported from the sides by the washing tub and the retainer (11') and from behind by the bearing surface (12') (Figure 5). However, forming the bearing surface (12') on the flange causes both increase in cost and difficulty in production. In the German Patent Application No. DE4013771 such an embodiment is explained.

[0005] In another state of the art embodiment, the retainer (11") is shaped in cascade form to create a bearing surface (12") that supports the gasket (10") from behind. Thus, the gasket (10") is supported both from one side and from behind by the retainer (11"). Consequently, by eliminating the need for forming a shape on the washing tub, production and cost advantages are provided (Figure 6). However, on the other hand, the production of the retainer (11 ") is hard and costly due to its end-to-end form. In the German Utility Model Document No. DE9015034 and the Canadian Patent Application No. CA2192269 , such embodiments are explained.

[0006] The aim of the present invention is the realization of a dishwasher the production of which is easy and the cost of which is low with respect to the elements providing the assembly of the gasket to the washing tub.

[0007] The dishwasher realized in order to attain the aim of the present invention, explicated in the first claim and the respective claims thereof comprises a washing tub having a ceiling, a rear wall, two side walls, a base and a flange extending from the base towards the rear wall and the side walls, into which the dishes are placed and a gasket mounted onto the ceiling, the side walls and the flange so as to provide leak-proofing between the door and the washing tub and so as to surround the opening.

[0008] The gasket is secured to the washing tub by being pressed between a retainer secured onto the washing tub and the wall onto which it is mounted. A bearing surface is formed on the ceiling and the side walls by blasting in order to support the gasket from behind.

[0009] The retainer is shaped as a thin long plate and secured onto the bearing surface so as to form a housing into which the gasket is placed together with the bearing surface and the ceiling or the side wall onto which it is secured. In other words, the gasket is supported along the ceiling and the side walls from behind by the bearing surface, from one side by the retainer and from one side by the ceiling or the side wall.

[0010] There is no bearing surface on the flange that supports the gasket from behind. At this region, a step is formed on the retainer for supporting the gasket from behind. The step is positioned below the bearing surface so as to be aligned with the bearing surface and to support the gasket from behind. Thus, a forming process on the flange is not needed.

[0011] The portion of the retainer extending along the side walls and the ceiling is shaped as a flat plate and supports the gasket from one side. The step formed on the bearing surface extends along the flange and shaped so as to support the gasket both from one side and from behind.

[0012] The washing tub is formed by joining a container-shaped first part produced preferably from metal, with the front side and the base being open, that forms the base, the rear wall and the side walls and a bowl-shaped second part produced preferably from plastic, having a base and a flange extending upwards from the base and surrounding the whole base. Due to the difference in terms of material, while the bearing surface can be easily formed on the side walls, forming it on the flange causes difficulty in terms of production. By means of the present invention, the gasket is provided to be supported at the flange level by means of the retainer and thus forming a stopper on the flange is not needed.

[0013] The step is formed by shaping preferably a widthwise portion of the retainer as an L. The portion of the retainer that is not formed supports the gasket from one side. Moreover, by means of the L form of the step, both the gasket is supported from behind and also the retainer is secured to the washing tub.

[0014] In the preferred embodiment of the present invention, a widthwise cut is formed on the retainer in order to form the step. The step is created by folding the portion of the retainer below the cut in L form. The depth of the cut is less than the total width of the retainer, and the region below the portion that is not cut supports the gasket from one side. The portion disposed below the cut and formed as an L, that is the step supports the gasket from behind with one side thereof and enables the re-

tainer to be secured onto the washing tub with the other side thereof perpendicular to the former.

[0015] The width of the cut is preferably as much as the total of the width and the length of the gasket. Thus, the step formed below the cut enables the gasket to be effectively supported by completely surrounding the gasket both from behind and also from one side.

[0016] By means of the present invention, it is possible to secure the gasket to the washing tub in an easy and production-friendly manner.

[0017] A dishwasher realized in order to attain the aim of the present invention is illustrated in the attached figures, where:

Figure 1 - is the perspective view of a dishwasher.
Figure 2 - is the perspective view of the washing tub and the door when the door is closed.
Figure 3 - is the perspective view of the washing tub.
Figure 4 - is the partial view of cross-section A-A in Figure 3.
Figure 5 - is the view of cross-section BB in Figure 3 in an embodiment of the prior art.
Figure 6 - is the view of cross-section B-B in Figure 3 in another embodiment of the prior art.
Figure 7 - is the view of detail Z in Figure 3 when the retainer is not mounted in the embodiment of the present invention.
Figure 8 - is the view of detail Z in Figure 3 in the embodiment of the present invention.
Figure 9 - is the view of cross section B-B in Figure 8.
Figure 10 - is the exploded view of cross section B-B in Figure 8.
Figure 11 - is the partial view of the retainer in the embodiment of the present invention.
Figure 12 - is the view of cross section C-C in Figure 11.

[0018] The elements illustrated in the figures are numbered as follows:

1. Dishwasher
2. Washing tub
3. Ceiling
4. Rear wall
5. Side wall
6. Base
7. Flange
8. Opening
9. Door
10. Gasket
11. Retainer
12. Bearing surface
13. Step
14. Cut

[0019] The dishwasher (1) comprises

- a washing tub (2) having a ceiling (3), a rear wall (4), two side walls (5), a base (6) and a flange (7) extending from the base (6) towards the rear wall (4) and the side walls (5), into which the dishes are placed,
- an opening (8) through which the dishes are loaded or unloaded into or from the washing tub (2),
- a door (9) covering the opening (8) so as to be opened by being rotated around a horizontal axis,
- a gasket (10) mounted onto the ceiling (3), the side walls (5) and the flange (7) so as to provide leak-proofing between the door (9) and the washing tub (2) and so as to surround the opening (8),
- at least one retainer (11) providing the gasket (10) to be mounted onto the washing tub (2) so as to be seated on the door (9) in the closed position by the gasket (10) being pressed between the washing tub (2) and the retainer (11)

(Figure 1 to Figure 4).

[0020] The dishwasher (1) of the present invention comprises a bearing surface (12) disposed on the ceiling (3) and the side walls (5), aligned with the retainer (11), supporting the gasket (10) from behind (Figure 7). The retainer (11) is in plate form and is secured to the washing tub (2) so as to be almost perpendicular to the bearing surface (12) and to extend parallel to the side wall (5) or the ceiling (3) onto which it is mounted (Figure 8). The retainer (11), furthermore comprises a step (13) disposed at the portion thereof aligned with the flange (7) at the continuance of the bearing surface (12), providing the portion of the gasket (10) aligned with the flange (7) to be supported from behind (Figure 9 to Figure 12). Thus, creating a form on the flange (7) for supporting the gasket (10) from behind is not needed any more, nor forming the retainer (11) from end to end is needed. Thus, ease of production is provided for both the flange (7) and the retainer (11).

[0021] The step (13) is formed by shaping the retainer (11) at the flange (7) level as an L (Figure 8 to Figure 12). Thus, the gasket (10) is supported from behind by the step (13), from one side by the flange (7), and from the other side by the portion of the retainer (11) that is not formed at the flange (7) level. Need of creating any form on the flange (7) in order to support the gasket (10) from behind at the flange (7) level is eliminated.

[0022] In an embodiment of the present invention, the retainer (11) comprises a cut (14) formed by cutting out the portion thereof aligned with the flange (7) widthwise such that the depth (d1) of the cut (14) is less than the total width of the retainer (11) and the step (13) formed by bending the portion of the retainer (11) below the cut (14) in L form. In this embodiment, while the arm of the L-shaped step (13) extending perpendicular to the retainer (11) supports the gasket (10) from behind, the arm thereof extending parallel to the retainer (11) is secured onto the flange (7) at a distance as much as the width of the retainer (11). Thus, the step (13) is provided to be

easily formed and the retainer (11) is enabled to be also secured to the flange (7) at this region.

[0023] In this embodiment, the cut (14) is cut such that its width (d1) allows the step (13) to surround the gasket (10) from behind and from one side (Figure 11). In other words, the width (d1) of the cut (14) is almost as much as the total of the width and the length of the gasket (10). Thus, the gasket (10) is provided to be clasped by the retainer (11).

[0024] It is to be understood that the present invention is not limited to the embodiments disclosed above and a person skilled in the art can easily introduce different embodiments. These should be considered within the scope of the protection postulated by the claims of the present invention.

Claims

1. A dishwasher (1) comprising - a washing tub (2) having a ceiling (3), a rear wall (4), two side walls (5), a base (6) and a flange (7) extending from the base (6) towards the rear wall (4) and the side walls (5), into which the dishes are placed, - an opening (8) through which the dishes are loaded or unloaded into or from the washing tub (2), - a door (9) covering the opening (8) so as to be opened by being rotated around a horizontal axis, - a gasket (10) mounted onto the ceiling (3), the side walls (5) and the flange (7) so as to provide leak-proofing between the door (9) and the washing tub (2) and so as to surround the opening (8), - at least one retainer (11) providing the gasket (10) to be mounted onto the washing tub (2) so as to seat on the door (9) in the closed position by the gasket (10) being pressed between the washing tub (2) and the retainer (11) - a bearing surface (12) disposed on the ceiling (3) and the side walls (5), aligned with the retainer (11), providing the gasket (10) to be supported from behind, - **characterized by** the retainer (11) - that is in plate form and that is secured to the washing tub (2) so as to be almost perpendicular to the bearing surface (12) and to extend parallel to the side wall (5) or the ceiling (3) onto which it is mounted. - having a step (13) disposed at the portion thereof aligned with the flange (7) at the continuance of the bearing surface (12), providing the portion of the gasket (10) aligned with the flange (7) to be supported from behind.

2. A dishwasher (1) as in Claim 1, **characterized by** the step (13) formed by shaping the retainer (11) at the flange (7) level in a partial L form.

3. A dishwasher (1) as in Claim 2, **characterized by** the retainer (11) comprising a cut (14) formed by cutting out the portion thereof aligned with the flange (7) widthwise such that the depth (d1) of the cut (14) is less than the total width of the retainer (11) and the step (13) formed by bending the portion of the retainer (11) below the cut (14) in L form.

4. A dishwasher (1) as in Claim 3, **characterized by** the cut (14) which has a width (d1) that allow the step (13) to surround the gasket (10) from behind and from one side.

Patentansprüche

1. Geschirrspüler (1), umfassend:

   - einen Spülbehälter (2) mit einer Decke (3), einer Rückwand (4), zwei Seitenwänden (5), einer Basis (6) und einem Flansch (7), der sich von der Basis (6) zur Rückwand (4) und den Seitenwänden (5) erstreckt, in den das Geschirr platziert wird,
   - eine Öffnung (8), durch die das Geschirr in den Spülbehälter (2) geladen oder daraus entladen wird,
   - eine Tür (9), die die Öffnung (8) abdeckt, derart, dass sie durch Drehen um eine horizontale Achse geöffnet wird,
   - eine Dichtung (10), die an der Decke (3), den Seitenwänden (5) und dem Flansch (7) angebracht ist, derart, dass sie einen Leckschutz zwischen der Tür (9) und dem Spülbehälter (2) bereitgestellt und die Öffnung (8) umgibt,
   - wenigstens einen Halter (11), der dafür sorgt, dass die Dichtung (10) am Spülbehälter (2) angebracht ist, derart, dass die Tür (9) in der geschlossenen Stellung sitzt, indem die Dichtung (10) zwischen dem Spülbehälter (2) und dem Halter (11) zusammengedrückt wird,
   - eine Lagerfläche (12), die an der Decke (3) und den Seitenwänden (5) angeordnet ist und am Halter (11) ausgerichtet ist und dafür sorgt, dass die Dichtung (10) von hinten abgestützt wird,
   dadurch gekennzeichnet, dass der Halter (11)
   - eine Plattenform aufweist und derart am Spülbehälter (2) gesichert ist, dass er nahezu senkrecht zur Lagerfläche (12) ist und sich parallel zur Seitenwand (5) oder der Decke (3) erstreckt, an der er angebracht ist,
   - eine Stufe (13) aufweist, die an einem Abschnitt desselben in Ausrichtung am Flansch (7) an der Fortsetzung der Lagerfläche (12) angeordnet ist und dafür sorgt, dass der Abschnitt der Dichtung (10), der am Flansch (7) ausgerichtet ist, von hinten abgestützt wird.

2. Geschirrspüler (1) nach Anspruch 1, **dadurch gekennzeichnet, dass** die Stufe (13) durch Formen des Halters (11) am Flansch (7) in einer ebenen Teil-L-Form gebildet ist.

3. Geschirrspüler (1) nach Anspruch 2, **dadurch gekennzeichnet, dass** der Halter (11) eine Aussparung (14) umfasst, die durch Ausschneiden des Abschnitts desselben, der am Flansch (7) ausgerichtet ist, in Breitenrichtung gebildet ist, derart, dass die Tiefe (d1) der Aussparung (14) geringer als die Gesamtbreite des Halters (11) ist und die Stufe (13) durch Biegen des Abschnitts des Halters (11) unter der Aussparung (14) in L-Form gebildet ist.

4. Geschirrspüler (1) nach Anspruch 3, **dadurch gekennzeichnet, dass** die Aussparung (14) eine Breite (d1) aufweist, die es der Stufe (13) erlaubt, die Dichtung (10) von hinten und von einer Seite zu umgeben.

Revendications

1. Un lave-vaisselle (1) comprenant

   - une cuve de lavage (2) qui a un plafond (3), une paroi arrière (4), deux parois latérales (5), une base (6) et une bride (7) qui s'étend à partir de la base (6) vers la paroi arrière (4) et les parois latérales (5), dans lequel la vaisselle est placée,
   - une ouverture (8) à travers laquelle la vaisselle est chargée dans ou déchargée de la cuve de lavage (2),
   - une porte (9) qui couvre l'ouverture (8) de manière à être ouverte en étant tournée autour d'un axe horizontal,
   - un joint d'étanchéité (10) qui est monté sur le plafond (3), les parois latérales (5) et la bride (7) de manière à assurer l'étanchéité entre la porte (9) et la cuve de lavage (2) et de manière à entourer l'ouverture (8),
   - au moins un élément de retenue (11) qui permet au joint d'étanchéité (10) d'être monté sur la cuve de lavage (2) de manière à s'asseoir sur la porte (9) en position fermée après que le joint d'étanchéité (10) est pressé entre la cuve de lavage (2) et l'élément de retenue (11),
   - une surface de support (12) qui est disposée sur le plafond (3) et les parois latérales (5), qui est alignée avec l'élément de retenue (11) et qui permet au joint d'étanchéité (10) d'être supporté par l'arrière

   caractérisé par l'élément de retenue (11)

   - qui est en forme de plaque et qui est fixé à la cuve de lavage (2) de manière à être presque perpendiculaire à la surface de support (12) et à s'étendre parallèlement à la paroi latérale (5) ou le plafond (3) sur lequel il est monté,
   - présentant une étape (13) qui est disposé à la partie de celui-là alignée avec la bride (7) à la continuité de la surface de support (12), qui permet à la partie du joint d'étanchéité (10) alignée avec la bride (7) d'être supportée par l'arrière.

2. Un lave-vaisselle (1) selon la Revendication 1, **caractérisé par** l'étape (13) qui est construite en formant l'élément de retenue (11) au niveau du bridge (7) en forme de L partielle.

3. Un lave-vaisselle (1) selon la Revendication 2, **caractérisé par** l'élément de retenue (11) comprenant une découpe (14) qui est formée en découpant la partie de celui-ci alignée avec la bride (7) dans le sens de la largeur de telle sorte que la profondeur (d1) de la découpe (14) est inférieure à la largeur totale de l'élément de retenue (11) et de l'étape (13) formée en pliant la partie de l'élément de retenue (11) au-dessous de la découpe (14) en forme de L.

4. Un lave-vaisselle (1) selon la Revendication 3, **caractérisé par** la découpe (14) ayant une largeur (d1) qui permet à l'étape (13) d'entourer le joint d'étanchéité (10) par l'arrière et d'un côté.

Figure 1

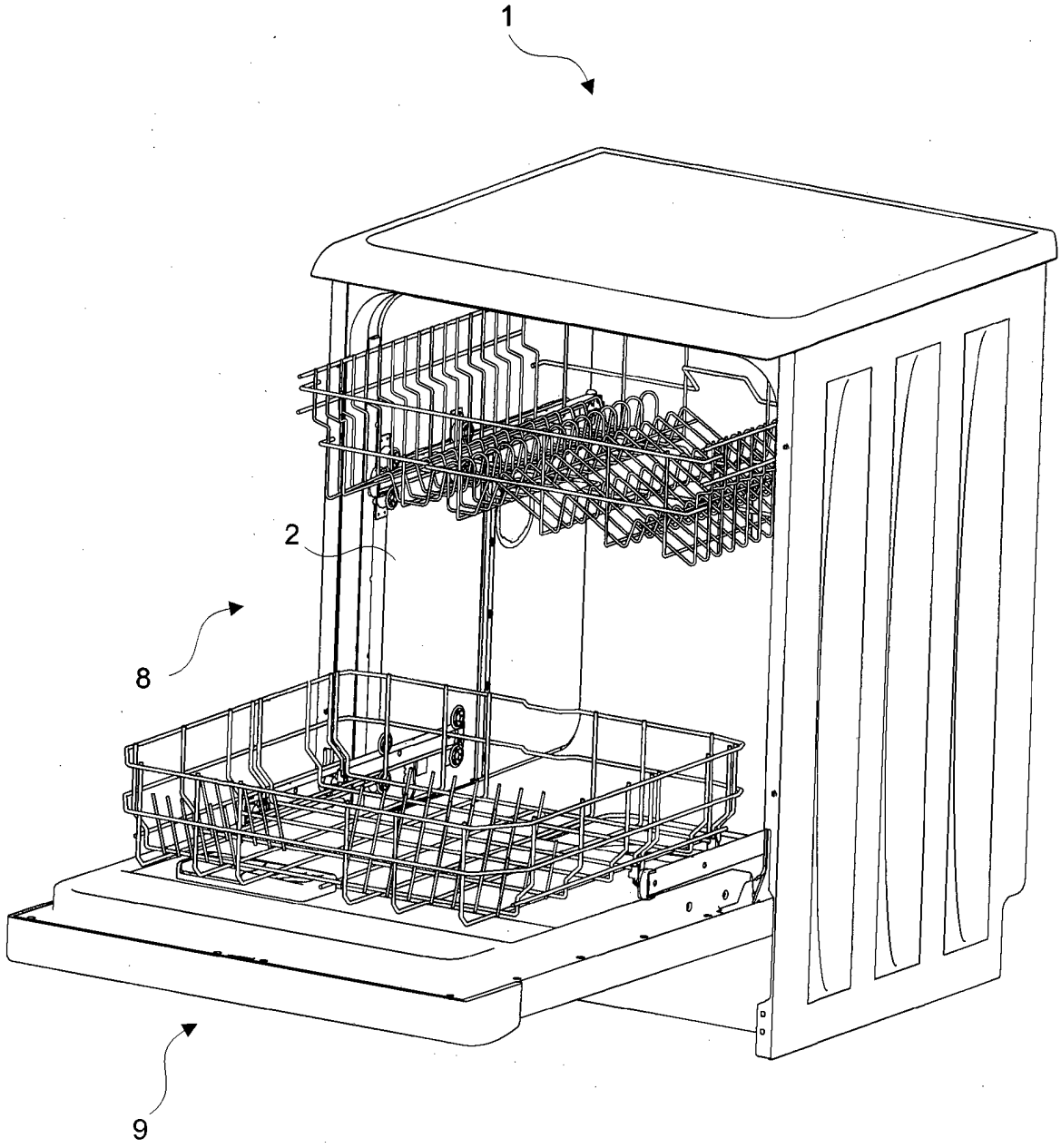

Figure 2

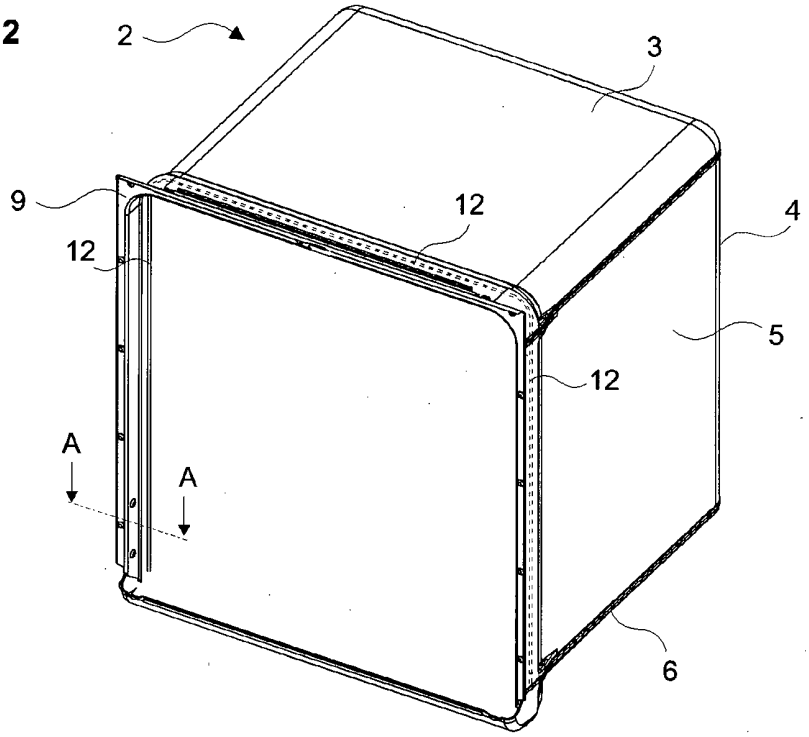

Figure 3

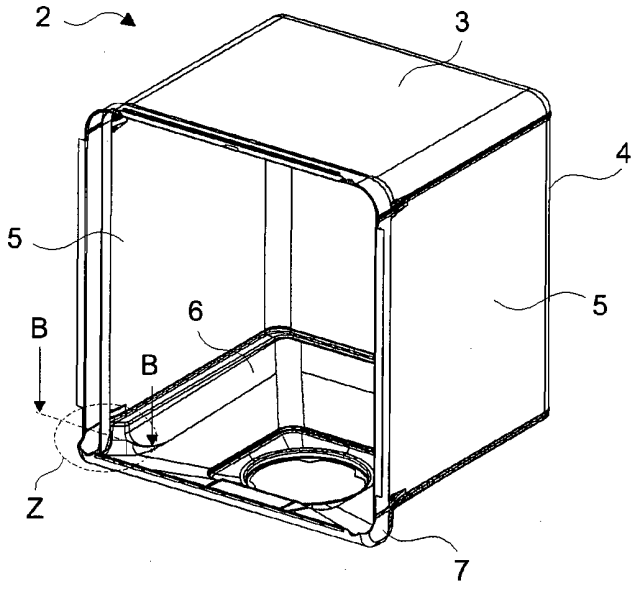

Figure 4

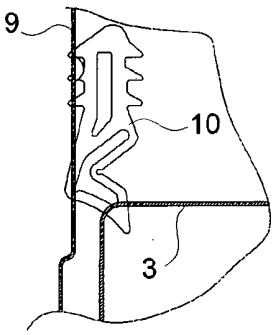

PRIOR ITY ART

Figure 5

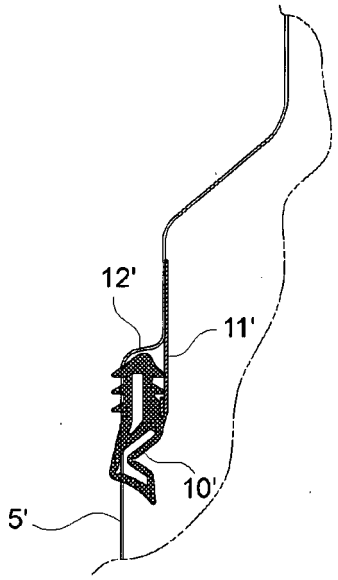

Figure 6

PRIOR ITY ART

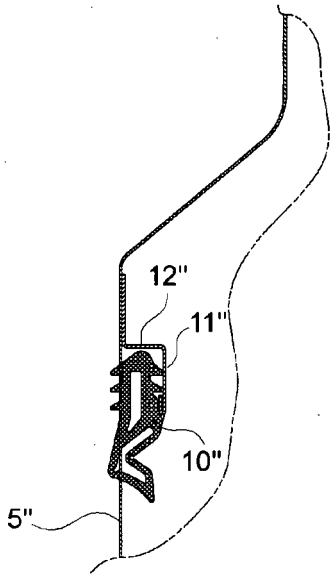

Figure 7

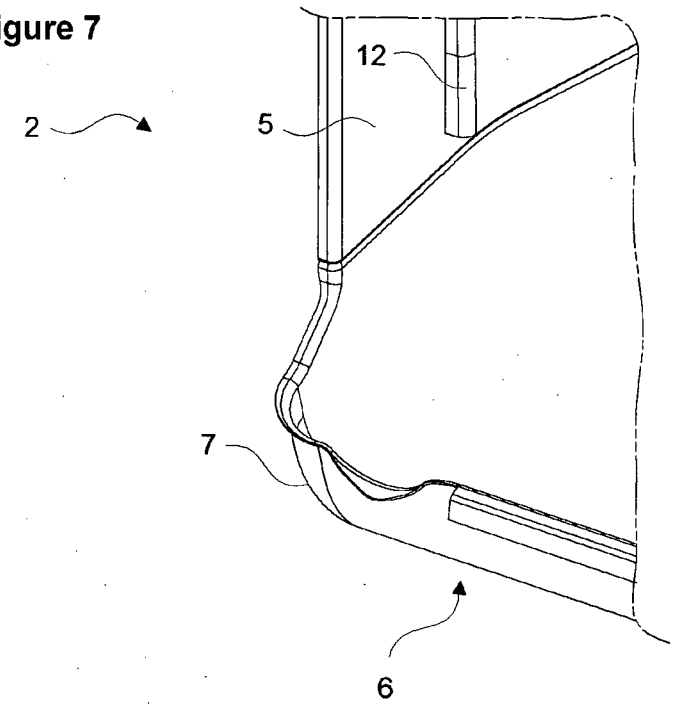

Figure 8

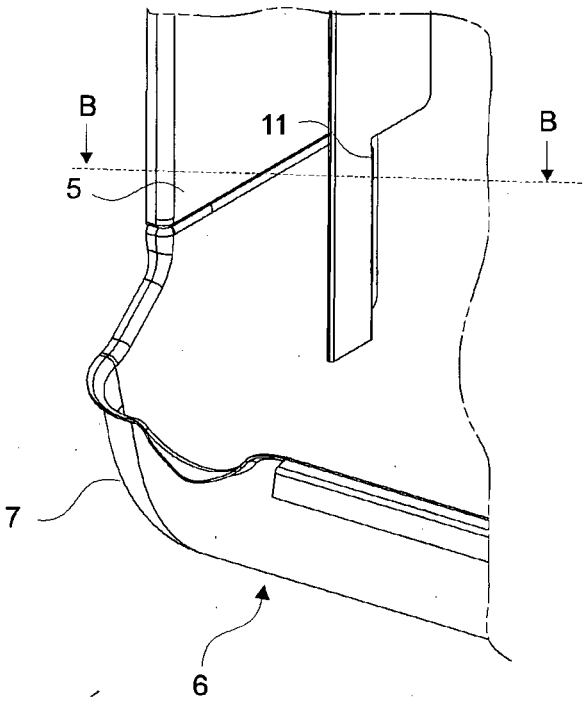

Figure 9

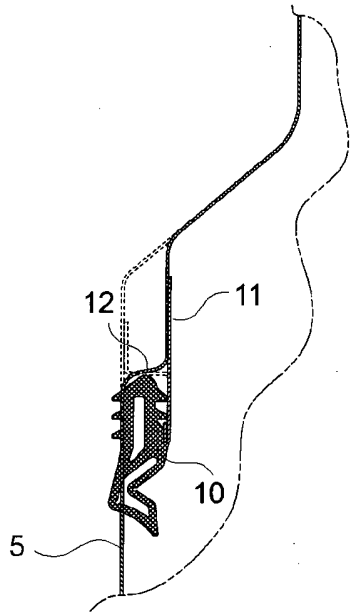

Figure 10

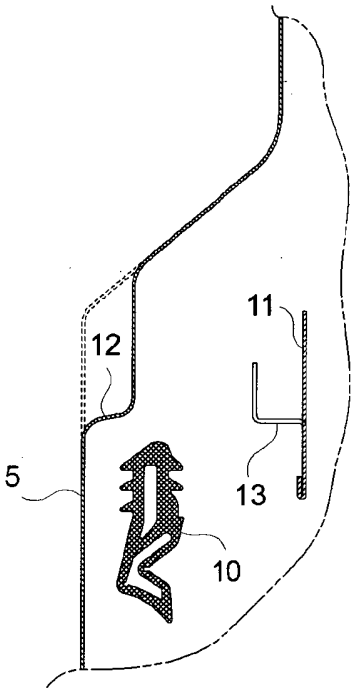

Figure 11

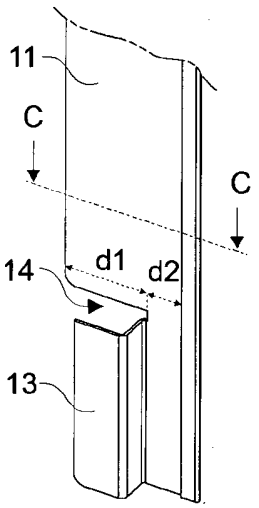

Figure 12

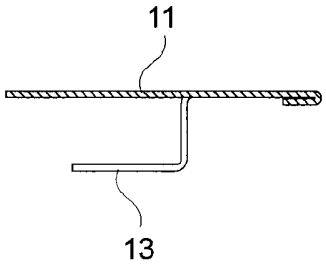

REFERENCES CITED IN THE DESCRIPTION

This list of references cited by the applicant is for the reader's convenience only. It does not form part of the European patent document. Even though great care has been taken in compiling the references, errors or omissions cannot be excluded and the EPO disclaims all liability in this regard.

Patent documents cited in the description

- DE 4013771 **[0004]**
- DE 9015034 **[0005]**
- CA 2192269 **[0005]**