(19) Europäisches Patentamt
European Patent Office
Office européen des brevets

(11) EP 2 636 568 A8

(12) CORRECTED EUROPEAN PATENT APPLICATION
published in accordance with Art. 153(4) EPC

(15) Correction information:
Corrected version no 1 (W1 A1)
Corrections, see
Bibliography INID code(s) 72

(48) Corrigendum issued on:
13.11.2013 Bulletin 2013/46

(43) Date of publication:
11.09.2013 Bulletin 2013/37

(21) Application number: **10859255.1**

(22) Date of filing: **04.11.2010**

(51) Int Cl.:
B60W 10/30 *(2006.01)* ***B60K 6/44*** *(2007.10)*
B60W 20/00 *(2006.01)*

(86) International application number:
PCT/JP2010/069586

(87) International publication number:
WO 2012/059998 (10.05.2012 Gazette 2012/19)

(84) Designated Contracting States:
AL AT BE BG CH CY CZ DE DK EE ES FI FR GB GR HR HU IE IS IT LI LT LU LV MC MK MT NL NO PL PT RO RS SE SI SK SM TR

(71) Applicant: **TOYOTA JIDOSHA KABUSHIKI KAISHA**
Toyota-shi, Aichi-ken, 471-8571 (JP)

(72) Inventors:
- **NISHIMINE, Akiko**
  Toyota-shi, Aichi-ken, 471-8571 (JP)
- **HAYASHI, Koji**
  Toyota-shi, Aichi-ken, 471-8571 (JP)
- **KANAYAMA, Takeshi**
  Toyota-shi, Aichi-ken, 471-8571 (JP)
- **HORI, Tetsuo**
  Toyota-shi, Aichi-ken, 471-8571 (JP)
- **MARUYAMA, Tomoyuki**
  Toyota-shi, Aichi-ken, 471-8571 (JP)
- **MIYAGAWA, Takeshi**
  Toyota-shi, Aichi-ken, 471-8571 (JP)
- **IL, Ryoki**
  Toyota-shi, Aichi-ken, 471-8571 (JP)
- **FURUKAWA, Tomoaki**
  Toyota-shi, Aichi-ken, 471-8571 (JP)
- **YAMAMURA, Norihiro**
  Toyota-shi, Aichi-ken, 471-8571 (JP)
- **SATO, Akihiro**
  Toyota-shi, Aichi-ken, 471-8571 (JP)

(74) Representative: **Kuhnen & Wacker**
Patent- und Rechtsanwaltsbüro
Prinz-Ludwig-Straße 40A
85354 Freising (DE)

(54) HYBRID DRIVING APPARATUS FOR VEHICLE

(57) A hybrid drive system configured to selectively establish one of a first drive mode in which a first motor/generator MG1 is operated with a drive force of an engine 12, to generate an electric energy and in which a vehicle drive force is generated primarily by a second motor/generator MG2, and a second drive mode in which the vehicle drive force is generated by the engine 12, and at least one of the first motor/generator MG1 and second motor/generator MG2 is operated to generate an assisting vehicle drive force, as needed, and further configured such that an amount of a working oil to be supplied to the first motor/generator MG1 is larger in the first drive mode than in the second drive mode, permitting sufficient cooling of the electric motor depending upon a selected one of the vehicle drive modes.

FIG.5

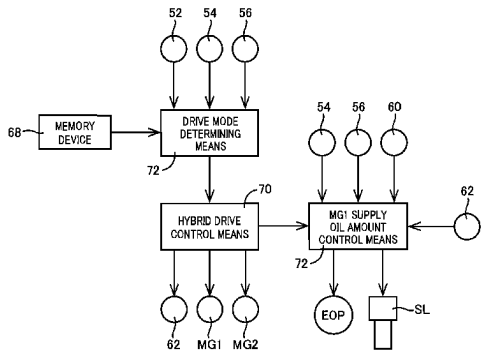

EP 2 636 568 A8