(19) Europäisches Patentamt
European Patent Office
Office européen des brevets

(11) **EP 2 667 964 B1**

(12) **EUROPEAN PATENT SPECIFICATION**

(45) Date of publication and mention of the grant of the patent:
08.10.2014 Bulletin 2014/41

(21) Application number: **12707898.8**

(22) Date of filing: **26.01.2012**

(51) Int Cl.:
B01F 13/00 *(2006.01)* ***B01F 13/04*** *(2006.01)*
F16P 3/08 *(2006.01)* ***B28C 5/42*** *(2006.01)*

(86) International application number:
PCT/IB2012/000115

(87) International publication number:
WO 2012/101508 (02.08.2012 Gazette 2012/31)

(54) APPARATUS WITH A ROTARY DRUM, SUCH AS A CONCRETE MIXER

VORRICHTUNG MIT EINER ROTIERENDEN TROMMEL WIE ETWA EIN BETONMISCHER

APPAREIL À TAMBOUR ROTATIF, NOTAMMENT BÉTONNIÈRE

(84) Designated Contracting States:
AL AT BE BG CH CY CZ DE DK EE ES FI FR GB GR HR HU IE IS IT LI LT LU LV MC MK MT NL NO PL PT RO RS SE SI SK SM TR

(30) Priority: **27.01.2011 IT UD20110009**

(43) Date of publication of application:
04.12.2013 Bulletin 2013/49

(73) Proprietor: **Le Officine Riunite - Udine SpA**
33030 Campoformido (IT)

(72) Inventor: **SALVADORI, Renzo**
53036 Poggibonsi (IT)

(74) Representative: **Petraz, Gilberto Luigi et al**
GLP S.r.l.
Viale Europa Unita, 171
33100 Udine (IT)

(56) References cited:
FR-A1- 2 754 485 **JP-A- 6 144 104**

Note: Within nine months of the publication of the mention of the grant of the European patent in the European Patent Bulletin, any person may give notice to the European Patent Office of opposition to that patent, in accordance with the Implementing Regulations. Notice of opposition shall not be deemed to have been filed until the opposition fee has been paid. (Art. 99(1) European Patent Convention).

EP 2 667 964 B1

Description

FIELD OF THE INVENTION

[0001] The present invention concerns an apparatus with a rotary drum such as a concrete mixer, or a rotary drum used in concrete plants, or mounted on trailers, for the preparation, storage, transport and mixing of concrete; the apparatus is provided at least with a device suitable to selectively block the rotation of the drum, to allow maintenance operations for example.

BACKGROUND OF THE INVENTION

[0002] Concrete mixers are known, comprising a rotary drum and one or more openings, usually two disposed in opposite positions of the drum, which are normally closed during work steps by a cover with a plurality of screws.

[0003] It is also known that inside the drum, for various reasons, residues of concrete tend to be anchored and adhere to the walls of the drum and the mixing elements which the drum normally has.

[0004] Moreover, given the abrasive property of concrete, the mixing elements are subjected to great wear and it is often necessary to intervene inside the drum to replace them or restore them.

[0005] It is therefore known to intervene, entering through the openings, inside the drum in order to carry out extraordinary maintenance operations.

[0006] To this purpose and for questions of safety, before intervening inside the drum it is indispensable to guarantee that the rotation of the drum is blocked in order to prevent the drum from accidentally rotating while an operator is inside the drum: this could be dangerous for the operator, who could fall onto the mixing elements and seriously hurt himself/herself.

[0007] To this purpose it is known to provide that the drum of a concrete mixer is provided with a mechanical blocking device to block its rotation.

[0008] A solution is known in which the blocking device comprises a fork element which is associated with a bearing structure of the drum and can be selectively positioned by the operator to bring it respectively into a first non-operating position, corresponding to the normal use of the concrete mixer, and into a second operating position, in which the fork element is placed in mechanical cooperation with an abutment block provided on the drum in order to prevent the rotation of the drum.

[0009] One limitation of the mechanical block is that the operator, because of his/her inexperience or negligence, can in any case enter into the drum without having deliberately activated the blocking device of the drum rotation, thus generating a dangerous situation where serious accidents can occur.

[0010] Another disadvantage is that the mechanical block can be deactivated by an external operator, who may not be aware of the presence of an operator inside the drum, putting the safety of the latter into serious jeopardy, for example by activating the rotation of the drum. Or the drum could spontaneously start rotating because of gravity, or because of the operator himself, for example as he/she gets out of the drum.

[0011] Document JP 6 144104 describes a mixer truck for concrete according to the preamble of claim 1 in which there are multiple access sections closed by a respective cover. The cover has a clamping mechanism which is released by driving a key which is the same as that of the motor of the concrete mixer. When the key is used to open the cover, it cannot be removed from the keyhole until the cover is re-closed.

[0012] This solution prevents putting the concrete mixer into motion when the cover is open, but it does not prevent accidental movements of the drum which can occur even with the motor off, for example caused by imbalances of the concrete residue present inside and/or by the operators who are working inside the drum. Moreover, the main purpose of JP'104 is to prevent great leakages of fresh concrete from the drum, but it does not solve the problem of safety of the operators who are working inside the drum.

[0013] One purpose of the present invention is to obtain an apparatus with a rotary drum, such as a concrete mixer for example, which allows an operator to work inside the drum in absolute safety without the risk of the drum automatically starting rotating or of a second operator activating it from outside the drum.

[0014] Another purpose is to obtain a simple and economic apparatus, equipped with safety devices which are non-invasive during normal use and suitable to be used even in very dangerous work environments.

[0015] The Applicant has devised, tested and embodied the present invention to overcome the shortcomings of the state of the art and to obtain these and other purposes and advantages.

SUMMARY OF THE INVENTION

[0016] The present invention is set forth and characterized in the independent claim, while the dependent claims describe other characteristics of the invention or variants to the main inventive idea.

[0017] In accordance with the above purposes, the present invention concerns an apparatus, such as a concrete mixer, with a rotary drum provided at least with an opening able to be selectively opened/closed by a closing element to allow access inside, and in which first clamping means are provided, able to be selectively actuated by an operator to prevent the rotation of the rotary drum.

[0018] According to one feature of the present invention, the closing element of the opening has second clamping means which block the removal thereof during normal use of the drum; the second closing means can be selectively released only in a condition where the said first clamping means are activated. In this way, the removal of the closing element, and therefore access to

the inside of the drum, is possible only if the latter is blocked, in a sure way, in its rotation.

[0019] According to another feature, the first clamping means associated with the rotation of the drum comprise at least an actuation element in order to activate them, and in particular the actuation element can be selectively removed by mating housing means only when the first clamping means are activated. In this case, the second clamping means, associated with the access opening of the drum, can be selectively released only by using the actuation element, so that access to the inside of the drum is possible only when the rotation of the drum is blocked.

[0020] According to one form of embodiment of the invention, the actuation element can, for example, be a key which is variably configured or shaped and is suitable to couple, for example, with a mating seating or shaped protrusion-head of the first and the second clamping means in order to activate them.

[0021] According to another feature, the actuation element is conformed to remain solidly associated with the second clamping means when these are released. In this way, once the closing element has been removed, the actuation element cannot be taken from the closing element in order to subsequently deactivate the first clamping means and leave the drum free to rotate with the opening still open.

[0022] According to the invention the first clamping means comprise at least a first blocking device which can be actuated by the actuation element and associated either with the rotary drum or with a fixed structure of the apparatus, in order to mechanically couple respectively either with the fixed structure or with the rotary drum and prevent the rotation of the latter.

[0023] The first blocking device can be, for example, a pin, a lock element, a hydraulic actuator, or interference elements which, when actuated, constrain the rotation of the drum.

[0024] According to a variant form of embodiment, the first clamping means comprise at least an abutment element, an anchoring device and the first blocking device.

[0025] The abutment element can be for example a block, a protrusion, a pin or similar, solidly associated with the rotary drum. In some forms of embodiment, the abutment elements can be associated with a guide or rolling element, of the rotary drum, which is suitable to maintain the latter coaxial to its axis of rotation.

[0026] The anchoring device is solidly associated with the fixed structure, advantageously the support structure of the rotary drum, and is suitable to couple mechanically with the abutment element in order to prevent the rotation of the rotary drum.

[0027] The first blocking device, which can be actuated by the actuation element, is suitable to keep the anchoring device coupled to the at least one abutment element, so that the rotation of the drum is not allowed until the actuation element provides to deactivate the first blocking device again.

[0028] According to a variant, the first clamping means comprise interception members associated with a hydraulic feed circuit of a hydraulic motor suitable to make the drum rotate. The interception members are suitable to prevent the rotation of the hydraulic motor and can be selectively actuated by means of the actuation element, or in other forms of embodiment by means of electrical signals or frequency signals.

[0029] For example, the interception members can be mechanical or servo commanded valves which intercept the work fluid for example between the delivery pipe and the exit from the motor so that the rotation of the hydraulic motor, and therefore of the rotary drum solidly associated therewith, is prevented.

[0030] According to another feature, the second clamping means comprise at least a second blocking device, able to be actuated by the actuation element and associated either with the rotary drum or with the closing element, to couple mechanically respectively either with the closing element or with the rotary drum and to prevent the removal of the closing element.

[0031] According to one form of embodiment, the second clamping means comprise a tightening element, associated either with the closing element or with the rotary drum, and conformed to couple solidly with the second blocking device associated respectively either with the rotary drum or with the closing element. The actuation element is selectively associable with the second blocking device so as to de-couple the tightening element from the second blocking device

[0032] According to a variant, the closing element comprises a plurality of attachment means suitable to attach the closing element to the opening, and the second clamping means are associated with at least one of the attachment means and are able to be selectively actuated by means of the actuation element. The attachment means can be screws, shaped brackets or pins for example.

[0033] According to one form of embodiment, if screws are used, it can be provided that at least one of these is provided with a suitable shaped head, having the shape of the actuation element, and therefore it will be possible to remove the screw only by using said actuation element.

[0034] According to another feature, the first clamping means and/or the second clamping means are chosen from a group comprising electric, magnetic, mechanical, electro-magnetic, electro-mechanical types or a combination thereof.

[0035] According to another feature, the first clamping means and/or the second clamping means can be selectively activated/deactivated by transmitting electric signals, and/or frequency signals.

BRIEF DESCRIPTION OF THE DRAWINGS

[0036] These and other characteristics of the present invention will become apparent from the following description of a preferential form of embodiment, given as

a non-restrictive example with reference to the fixed drawings wherein:

- fig. 1 is a lateral view of an apparatus with a rotary drum according to the present invention;
- fig. 2 is a perspective view of a detail in fig. 1;
- fig. 3 is a first detail of fig. 2 in a first operating configuration;
- fig. 4 is a second detail of fig. 1 in the first operating condition;
- fig. 5 is a view of a first detail of fig. 3 in a second operating condition;
- fig. 6 is a view of a second detail of fig. 4 in the second operating condition;
- fig. 7 is a schematic representation of a feed circuit of the apparatus with a rotary drum of fig. 1;
- fig. 8 is a variant of fig. 7;
- fig. 9 is a variant of fig. 3;
- fig. 10 is another variant of fig. 7.

[0037] To facilitate comprehension, the same reference numbers have been used, where possible, to identify identical common elements in the drawings.

DETAILED DESCRIPTION OF SOME PREFERENTIAL FORMS OF EMBODIMENT

[0038] With reference to fig. 1, an apparatus with a rotary drum, in this case a concrete mixer, is indicated in its entirety with the reference number 10 and comprises a truck 11 on which is disposed, between a front support structure 12 and a rear support structure 13, a rotary drum 15 which is suitable for preparing, mixing, transporting and temporarily storing the concrete inside it.

[0039] Drive members 16, which can be selectively controlled by a control unit 17, are associated with the drum 15, in proximity to the first support 12, in order to command the rotation of the drum 15.

[0040] The drum 15 is provided with openings 20, in this case two, made at diametrically opposite positions and closed by a closing element or cover 21.

[0041] Each opening 20 has sizes that allow an operator to be able to access inside the drum 15 and has a substantially elliptic shape even if, in other forms of embodiment, different shapes may be provided, such as rectangular, polygonal, circular or similar.

[0042] The opening 20 (figs. 4 and 6) is defined by a peripheral wall 22 which extends, in the case shown in the drawings, toward the inside of the drum 15, substantially orthogonal to the circumferential development surface of the latter, and by an abutment wall 23 disposed inside the drum and substantially orthogonal to the peripheral wall 22. In this way the cover 21 is prevented from protruding from the bulk defined by the drum 15 and from obstructing or hindering its rotation.

[0043] The cover 21 is provided, in a known way, with attachment means to attach it to the opening 20. In this case the attachment means comprise attachment screws 25 which are attached to the abutment wall 23 (fig. 6), but it is clear that other attachment solutions, such as rapid attachment means for example, could be provided.

[0044] For example, in other forms of embodiment, hinging means are associated with the cover 21, disposed peripherally to the opening 20 to allow the articulated connection of the cover 21 with the external body of the drum 15, and attachment means provide to close the cover 21 for the normal use of the concrete mixer 10.

[0045] The rear support structure 13 (fig. 2) comprises a frame 37 disposed substantially orthogonal with respect to the axis of rotation Z of the drum 15, on the opposite sides of which, in the case shown here, two supports 39 are disposed of the known type, suitable to allow the rotation of the drum 15 around the axis Z thereof. It is clear that in other forms of embodiment other supports can be provided, associated with the lower part of the drum 15 in order to support the whole load.

[0046] To this end the drum 15, in its rear part, is also provided with a rolling ring 26 which cooperates with the supports 39 to maintain the drum 15 in axis.

[0047] The rolling ring 26 (fig. 2) comprises a first surface 27 and a second surface 28 which extend in a radial direction with respect to the circumferential surface of the drum 15.

[0048] On the rear part of the concrete mixer 10 there are first clamping means 40 to block the rotation of the drum 15, which respectively comprise a first 31 and a second 32 block which are solidly attached on the first surface 27 of the rolling ring 26, an anchoring device 41 which is attached to the rear part of the frame 37 and a first blocking device 38 suitable to block the position assumed by the anchoring device 41.

[0049] In this specific case, the first and second block 31 and 32 are substantially parallelepiped in shape, even if, in different forms of embodiment, the shape could be different, for example rounded, and are attached to the rolling ring 26 in diametrically opposite positions so that, when they are aligned in the vertical direction, one of the openings 20 is in an easily accessible position for the operators. Merely to give an example, in this configuration one of the openings 20 is at a height comprised between 20 cm and 50 cm, advantageously at 35 cm, with respect to the platform of the truck 11.

[0050] The anchoring device 41 (figs. 3 and 5) comprises a support bracket 36, provided with two pintles 42 around which a fork element 35 is mounted, partly rotatable.

[0051] The fork element 35 comprises a pin 43 pivoted in seatings 45 made on the pintles 42, an anchoring plate 46 and a command lever 47.

[0052] The anchoring plate 46 is provided with a cavity 50, substantially conformed to the cross section of the first 31 and second block 32 and which in use couples mechanically with one of them, in this case with the first block 31.

[0053] The command lever 47 is able to be selectively actuated by an operator to make the anchoring plate 46

rotate around the pin 43 and determine the coupling, or respectively the release, of the anchoring plate 46 with/from the first or second block 31 or 32.

[0054] The command lever 47 and the anchoring plate 46 are solidly associated with each other by means of a tubular body 51 which is hinged on the pin 43, and are disposed at angles to each other.

[0055] The first clamping device 38 comprises an interference pin 52, selectively positionable in a first inactive position in which it is partly withdrawn inside it, (fig. 3), and a second active position (fig. 5) in which it protrudes toward the outside and couples mechanically with an interference seating 55 made in the tubular body 51, that is, so as to prevent the rotation of the fork element 35 around the pin 43.

[0056] The interference seating 55 is made on the tubular body 51 in a position such that, when the cavity 50 of the anchoring plate 46 grips either the first or second block 31 and 32, the interference pin 52 can be coupled with it.

[0057] The interference pin 52 is activated by means of one or more keys 56, in this case two, which during the normal working steps remain clamped in suitable holes 57 of the first blocking device 38.

[0058] According to a preferential form of embodiment, the keys 56 remain solidly associated with the blocking device 38 until the interference pin 52 is completely inserted inside the interference seating 55, given that otherwise the tubular body 51 would prevent the complete emergence thereof.

[0059] A catch 59 is also associated with the support bracket 36, and is suitable to clamp the command lever 47 to keep the anchoring plate 46 in a non-coupled position with the blocks 31 or 32.

[0060] To ensure that the anchoring plate 46 can move to a position such as to allow the insertion of the interference pin 52 inside the interference seating 55 only when it is coupled with one of the blocks 31 or 32, two bars 30 are associated, for example by welding, to the first surface 27 of the rolling ring 26. The bars 30 are substantially semi-circular in shape and are disposed in opposite positions with respect to the first 31 and second 32 block.

[0061] In this specific case, the two bars 30 are located substantially orthogonal to the first surface 27 and together define, near to the respective terminal ends of the two bars 30, a circumference interrupted by respective two or more interruptions 33, near which the blocks 31 and 32 are attached.

[0062] According to another form of embodiment (fig. 9), instead of being provided with the first and second block 31 and 32 and the anchoring plate device 41, the first clamping means 40 may comprise only the blocking device 38, which is attached directly to the frame 37 of the rear support structure 13.

[0063] In this case, it is provided that the two bars 30 of the rolling ring 26 are substantially continuous to define a circumference and that, in diametrically opposite positions, two or more coupling seatings are made in which, when it is necessary to activate the first clamping means 40 to block the rotation of the drum 15, the interference pin 52 of the first blocking device 38 is mechanically coupled.

[0064] In another form of embodiment it may be provided that, instead of making the seatings on the two bars 30, they are both made directly on the rolling ring 26.

[0065] Second clamping means 60 are associated with each cover 21 (figs. 4 and 6) and each opening 20, and comprise a second blocking device 61 attached in an attachment seating 62 made near the opening 20, and a bolt 63 sliding in a support 65.

[0066] When the concrete mixer 10 is in normal use, that is, with the opening 20 closed by the cover 21, the bolt 63 (fig. 4) is solidly coupled with the second blocking device 61 to prevent it from opening, and the attachment screws 25 are screwed in to guarantee the seal.

[0067] If access inside the drum 15 is required, it is necessary to activate the first clamping means 40, from which, once they are activated, it is possible to remove the two keys 56 and, inserting one of them inside a corresponding shaped hole 66 present in the second blocking device 61, it is possible to remove the bolt 63 from the latter and allow the cover 21 to be removed (fig. 6).

[0068] In particular the two keys 56 associated with the first clamping means 40 are shaped differently from each other: one is associable with a corresponding second blocking device 61 present in one of the two openings 20 and the other key 56 is associable with the other opening 20.

[0069] According to a preferential form of embodiment, it is possible to provide that the key 56 inserted in the second blocking device 61 cannot be removed except when the bolt 63 is reinserted in the latter, thus guaranteeing that the cover 21 is put to close the drum 15 and therefore there are no operators present inside.

[0070] In another form of embodiment, not shown in the drawings, it may be provided that the second clamping means 60 comprise only the second blocking device 61 which is conformed like the first blocking device 40 as described above, or it has the interference pin 52 which is attached to the cover 21 and is suitable to couple mechanically with a coupling seating that is made on a bracket solidly attached to the external surface of the drum 15. In the condition where the second clamping means 60 are active, the interference pin 57 of the second blocking device 61 is mechanically coupled with the coupling seating of the bracket.

[0071] According to another form of embodiment, that is not part of the invention, instead of providing a mechanical blocking of the rotation of the drum 15, it may be provided that the blocking is done hydraulically, for example by intervening on the drive members 16.

[0072] In this case, the drive members 16 (fig. 7) comprise a hydraulic motor 70, of the volumetric and invertible type, associated with the drum 15 by reduction members 71 and made to rotate, in known modes, by means of a hydraulic circuit 72, substantially known and comprising

at least a hydraulic pump.

[0073] In particular, the hydraulic motor 70 is connected to the hydraulic circuit 72 by means of hydraulic pipes 73.

[0074] First clamping means 140 comprise respectively a first interception valve 75 and a second interception valve 76, each of which is selectively actuated by means of a respective blocking device 138.

[0075] A key 156 is solidly associated with each blocking device 138, and allows to open/close the respective interception valve 75 and 76.

[0076] It is possible to remove the keys 156 from the interception valves only when the latter are in the closed position, that is, where they prevent the passage of the process fluid.

[0077] When both the interception valves 75 and 76 are closed, given that the process fluid cannot be compressed and given the type of hydraulic motor 70, its drive shaft is blocked, preventing the free rotation of the drum 15.

[0078] The drum 15, as described above, is provided with two opposite openings 20 closed by a cover 21, which comprises second clamping means 160 suitable to impede its opening if they are not properly activated.

[0079] The cover 21, as described above, is provided with a plurality of attachment screws 25, two of which, in this case disposed in opposite positions, comprise a second blocking device 161 of the second clamping means 160.

[0080] Each of the two blocking devices 161 is provided with a shaped hole 166 suitable to allow the keys 156 to be inserted, which are removed from the interception valves 75 and 76 when the latter are closed.

[0081] In this way, by inserting the keys 156 into the shaped holes 166 of the second blocking devices 161 it is possible to release the closure of the cover 21 to allow it to be removed, once the attachment screws 25 have also been removed.

[0082] In another form of embodiment (fig. 10), the first clamping means 340 comprise an interference element or chock 384, which is conformed substantially to the shape of the drum 15, is associated with the frame 37 and is actuated by a hydraulic actuator 385 to be taken to a first position of interference against the drum 15 and to block its rotation, and a second inactive position where rotation is allowed. The hydraulic actuator 385 is commanded by the same oil-dynamic circuit 72 that drives the drive members 16 to rotate the drum 15, and in particular the drive of the oil-dynamic circuit 72 occurs by actuating a key 356 directly associated with it, for example near a command console.

[0083] When the key 356 is removed, the dis-activation of the oil-dynamic circuit 72 drives the hydraulic actuator 385, taking the chock 384 into a condition of interference with the drum 15, to block the rotation thereof.

[0084] The key 356, like the forms of embodiment described above, may subsequently be associated with second clamping means which are associated with the cover 21 or the drum 15 and which are suitable to prevent the removal of the cover 21 when the drum is not constrained in rotation.

[0085] In this case the drum 15 may be clamped in any angular position whatsoever without needing to position it near mating clamping means.

[0086] It is clear that modifications and/or additions of parts may be made to the apparatus as described heretofore, without departing from the field and scope of the present invention.

[0087] For example, in another form of embodiment (fig. 8), which is not part of the invention, instead of providing a mechanical or hydraulic blocking of the rotation of the drum 15, it may be provided that the blocking is of an electric/magnetic type.

[0088] The command unit 17 of the concrete mixer 10 is provided with a switch 281 able to be selectively activated by an external operator and with a transmitter 282 suitable to send electric signals when the switch 281 is actuated.

[0089] Like the form of embodiment described above, the hydraulic pipes 73 are connected to the hydraulic circuit 72, they connect to the hydraulic motor 70 and are provided with interception valves 275 and 276 of the electromechanical type, and suitable to receive an electric signal or a frequency signal.

[0090] In the same way, a blocking device 283 of the electromechanical type is associated with the cover 21 which, in normal use, is provided with mechanical means that prevent the cover from opening.

[0091] The blocking device 283 also comprises a signals receiver suitable to receive signals and to dis-activate the mechanical means.

[0092] When it is necessary to enter inside the drum 15, the switch 281 is activated and by means of the transmitter 282 a signal is sent both to the interception valves 275, 276 and also to the blocking device 283, respectively to block the rotation of the hydraulic motor 70 and to dis-activate the blocking device 283 of the cover 21.

[0093] The interception valves 275 and 276 will not be opened until the cover 21 is put to cover the opening 20 and the blocking device 283 has sent a signal to the central command unit 280 to confirm this condition.

[0094] It is also quite obvious that, if the motor used to rotate the drum 15 is the electric type, instead of providing to transmit signals to the electrovalves 275 and 276, the signal will be received by a receiver of the electric motor itself, which will provide to block the rotation of its rotor and hence the rotation of the drum 15.

Claims

1. Apparatus with a rotary drum (15) and a fixed structure (37), such as a concrete mixer, provided at least with an opening (20) able to be selectively opened/closed by a closing element (21) to allow access inside said drum (15), and in which first

clamping means (40; 340) are provided, able to be selectively actuated to prevent the rotation of said rotary drum (15), wherein second clamping means (60) are associated with said closing element (21) of the opening (20) and are suitable to block, during normal use, the removal of said closing element (21) and are selectively releasable only in a condition in which said first clamping means (40, 340) are activated, **characterized in that** said first clamping means comprises a first blocking device (38,384) provided on said rotary drum (15) or on said fixed structure (37) and able to be selectively activated to prevent the rotation of said rotary drum (15) by mechanical interference, **in that** said first clamping means (40, 340) comprise at least an actuation element (56, 356) in order to activate said first blocking device (38,384) said actuation element (56, 356) being selectively removable from said first clamping means (40; 340) only when the latter are activated, and **in that** said second clamping means (60) are selectively releasable by means of said actuation element (56, 356).

2. Apparatus as in claim 1, **characterized in that** said actuation element (56, 356) is conformed to remain solidly associated with said second clamping means (60) when they are released.

3. Apparatus as in claim 1 or 2, **characterized in that** said first clamping means (40) comprise at least an abutment element (31, 32) solidly associated with said rotary drum (15), an anchoring device (41) associated with said fixed structure (37) and suitable to couple mechanically with said abutment element (31, 32) to prevent the rotation of said rotary drum (15), and **in that** the first blocking device (38) is suitable to keep said anchoring device (41) coupled with said at least one abutment element (31, 32).

4. Apparatus as in claim 3, **characterized in that** said abutment elements (31, 32) are associated with a rolling element (26) of said rotary drum (15), suitable to keep said rotary drum (15) coaxial with an axis of rotation (Z).

5. Apparatus as in any claim from 1 to 4, **characterized in that** said second clamping means (60) comprise at least a second blocking device (61) able to be actuated by said actuation element (56), associated with one of either said rotary drum (15) or said closing element (21), and suitable to couple mechanically respectively either with said closing element (21) or with said rotary drum (15) and to prevent the removal of said closing element (21).

6. Apparatus as in claim 5, **characterized in that** said second clamping means (60) comprise a tightening element (63) associated with said closing element (21) or with said rotary drum (15) and conformed to couple solidly with said second blocking device (61) associated respectively either with said rotary drum (15) or with said closing element (21), and **in that** said actuation element (56) is selectively associable with said second blocking device (61) so as to decouple said tightening element (63) from said second blocking device (61).

Patentansprüche

1. Vorrichtung mit einer rotierenden Trommel (15) und einer stationären Struktur (37), wie zum Beispiel ein Betonmischer, versehen mit einer Öffnung (20), die geeignet ist, selektiv durch ein Schließelement (21) geöffnet/geschlossen zu werden, um Zugang in die Trommel (15) zu ermöglichen, und bei welcher erste Klemm-Mittel (40, 340) vorgesehen sind, die geeignet sind, selektiv betätigt zu werden, um die Rotation der rotierenden Trommel (15) zu verhindern, wobei zweite Klemm-Mittel (60) mit dem Schließelement (21) der Öffnung (20) verbunden sind und geeignet sind, während des normalen Gebrauchs das Entfernen des Schließelements (21) zu blockieren und nur in einem Zustand selektiv lösbar sind, in welchem die ersten Klemm-Mittel (40, 340) aktiviert sind,
dadurch gekennzeichnet, dass die ersten Klemm-Mittel eine an der rotierenden Trommel (15) oder an der stationären Struktur (37) vorgesehene erste Blockiervorrichtung (38, 384) umfassen und fähig sind, selektiv aktiviert zu werden zum Verhindern der Rotation der rotierenden Trommel (15) durch mechanische Interferenz, weiter **gekennzeichnet dadurch, dass** die ersten Klemm-Mittel (40, 340) mindestens ein Betätigungselement (56, 356) zum Aktivieren der ersten Blockiervorrichtung (38, 384) umfassen, wobei das Betätigungselement (56, 356) von den ersten Klemm-Mitteln (40, 340) nur selektiv entfernbar ist, wenn letztere aktiviert sind, und dadurch, dass die zweiten Klemm-Mittel (60) mittels des Betätigungselements (56, 356) selektiv lösbar sind.

2. Vorrichtung nach Anspruch 1, **dadurch gekennzeichnet, dass** das Betätigungselement (56, 356) angepasst ist, fest mit den zweiten Klemm-Mitteln (60) verbunden zu bleiben, wenn diese gelöst sind.

3. Vorrichtung nach Anspruch 1 oder 2, **dadurch gekennzeichnet, dass** die ersten Klemm-Mittel (40) mindestens ein fest mit der rotierenden Trommel (15) verbundenes Widerlagerelement (31, 32), eine mit der stationären Struktur (37) verbundene Verankerungsvorrichtung (41) umfassen, die geeignet ist zum mechanischen Kuppeln mit dem Widerlagerelement (31, 32), um die Rotation der rotierenden Trommel (15) zu verhindern, und weiter dadurch, dass die erste Blockiervorrichtung (38) geeignet ist,

die Verankerungsvorrichtung (41) gekuppelt mit dem mindestens einen Widerlagerelement (31, 32) zu halten.

4. Vorrichtung nach Anspruch 3, **dadurch gekennzeichnet, dass** die Widerlagerelemente (31, 32) mit einem Rollelement (26) der rotierenden Trommel (15) verbunden sind, welches geeignet ist, die rotierende Trommel (15) koaxial mit einer Rotationsachse (Z) zu halten.

5. Vorrichtung nach einem der Ansprüche 1 bis 4, **dadurch gekennzeichnet, dass** die zweiten Klemm-Mittel (60) mindestens eine zweite Blockiervorrichtung (61) umfassen, welche fähig ist, durch das Betätigungselement (56) betätigt zu werden, und welche mit einem von entweder der rotierenden Trommel (15) oder dem Schließelement (21) verbunden ist und geeignet ist zum mechanischen Kuppeln jeweils entweder mit dem Schließelement (21) oder mit der rotierenden Trommel (15) und zum Verhindern des Entfernens des Schließelements (21).

6. Vorrichtung nach Anspruch 5, **dadurch gekennzeichnet, dass** die zweiten Klemm-Mittel (60) ein Spannelement (63) umfassen, welches mit dem Schließelement (21) oder mit der rotierenden Trommel (15) verbunden ist, und welches angepasst ist, fest mit den zweiten jeweils entweder mit der rotierenden Trommel (15) oder mit den Schließelement (21) verbundenen Klemm-Mitteln (61) gekuppelt zu sein, und dass das Betätigungselement (56) selektiv mit der zweiten Blockiervorrichtung (61) verbindbar ist, um das Spannelement (63) von der zweiten Blockiervorrichtung (61) abzukuppeln.

Revendications

1. Appareil avec un tambour rotatif (15) et une structure fixe (37), telle qu'une bétonnière, prévu au moins avec une ouverture (20) pouvant être sélectivement ouverte/fermée par un élément de fermeture (21) pour permettre l'accès à l'intérieur dudit tambour (15), et dans lequel on prévoit des premiers moyens de serrage (40 ; 340) pouvant être sélectivement actionnés pour empêcher la rotation dudit tambour rotatif (15), dans lequel :

des seconds moyens de serrage (60) sont associés avec ledit élément de fermeture (21) de l'ouverture (20) et sont appropriés pour bloquer, pendant l'utilisation normale, le retrait dudit élément de fermeture (21) et sont sélectivement libérables uniquement dans une conditions dans laquelle lesdits premiers moyens de serrage (40, 340) sont activés, **caractérisé en ce que** lesdits premiers moyens de serrage comprennent un premier dispositif de blocage (38, 384) prévu sur ledit tambour rotatif (15) ou sur ladite structure fixe (37) et pouvant être sélectivement activé pour empêcher la rotation dudit tambour rotatif (15) par interférence mécanique, **en ce que** lesdits premiers moyens de serrage (40, 340) comprennent au moins un élément d'actionnement (56, 356) afin d'activer ledit premier dispositif de blocage (38, 384), ledit élément d'actionnement (56, 356) étant sélectivement amovible desdits premiers moyens de serrage (40 ; 340) uniquement lorsque ces derniers sont activés, et **en ce que** lesdits seconds moyens de serrage (60) sont sélectivement libérables au moyen dudit élément d'actionnement (56, 356).

2. Appareil selon la revendication 1, **caractérisé en ce que** ledit élément d'actionnement (56, 356) est conformé pour rester associé de manière solidaire avec lesdits seconds moyens de serrage (60) lorsqu'ils sont libérés.

3. Appareil selon la revendication 1 ou 2, **caractérisé en ce que** lesdits premiers moyens de serrage (40) comprennent au moins un élément de butée (31, 32) associé de manière solidaire avec ledit tambour rotatif (15), un dispositif d'ancrage (41) associé avec ladite structure fixe (37) et approprié pour se coupler mécaniquement avec ledit élément de butée (31, 32) afin d'empêcher la rotation dudit tambour rotatif (15), et **en ce que** le premier dispositif de blocage (38) est approprié pour maintenir ledit dispositif d'ancrage (41) couplé avec ledit au moins un élément de butée (31, 32).

4. Appareil selon la revendication 3, **caractérisé en ce que** lesdits éléments de butée (31, 32) sont associés avec un élément roulant (26) dudit tambour rotatif (15), approprié pour maintenir ledit tambour rotatif (15) coaxial par rapport à un axe de rotation (Z).

5. Appareil selon l'une quelconque des revendications 1 à 4, **caractérisé en ce que** lesdits seconds moyens de serrage (60) comprennent au moins un second dispositif de blocage (61) pouvant être actionné par ledit élément d'actionnement (56), associé à l'un parmi ledit tambour rotatif (15) ou ledit élément de fermeture (21), et approprié pour se coupler mécaniquement respectivement avec ledit élément de fermeture (21) ou avec ledit tambour rotatif (15) et pour empêcher le retrait dudit élément de fermeture (21).

6. Appareil selon la revendication 5, **caractérisé en ce que** lesdits seconds moyens de serrage (60) comprennent un élément de serrage (63) associé avec ledit élément de

fermeture (21) ou avec ledit tambour rotatif (15) et conformé pour se coupler de manière solidaire avec ledit second dispositif de blocage (61) respectivement associé avec ledit tambour rotatif (15) ou avec ledit élément de fermeture (21), et **en ce que** ledit élément d'actionnement (56) peut sélectivement être associé avec ledit second dispositif de blocage (61) afin de découpler ledit élément de serrage (63) dudit second dispositif de blocage (61).

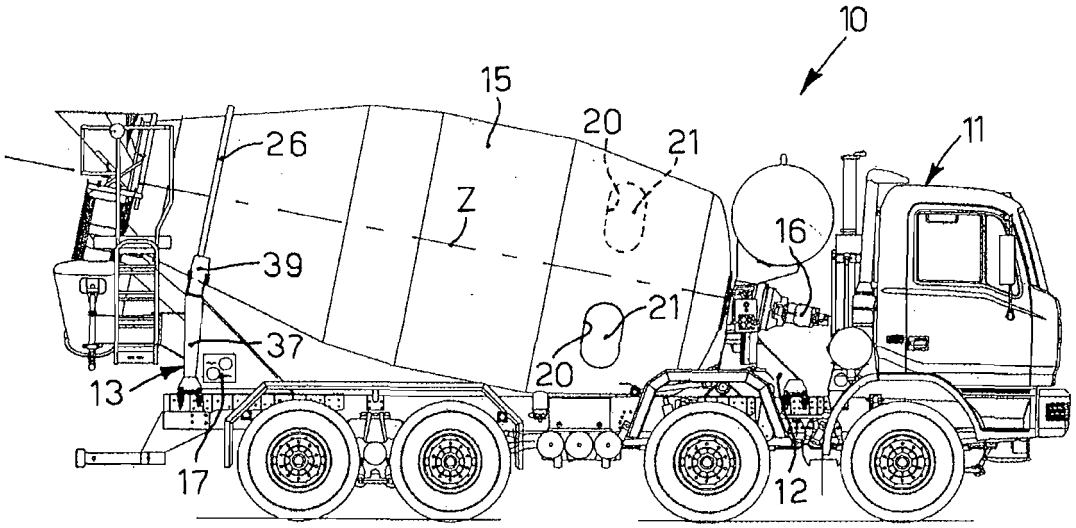
10
15
20
21
11
26
Z
16
39
21
37
20
13
17
12

fig. 1

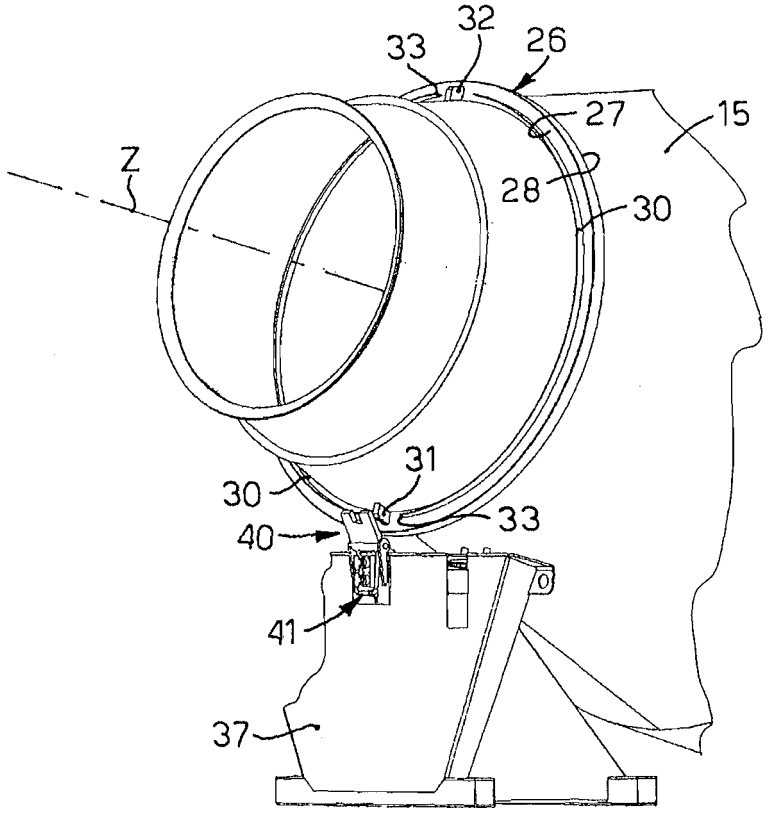
32
33
26
27
15
Z
28
30
31
30
33
40
41
37

fig. 2

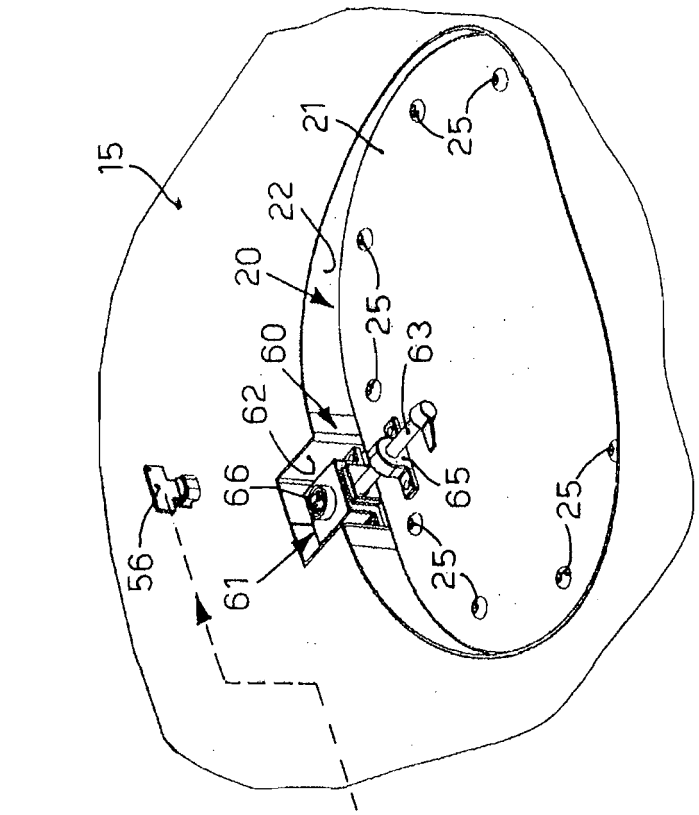
15
21
25
22
20
25
60
63
62
66
65
56
61
25
25
25

fig. 4

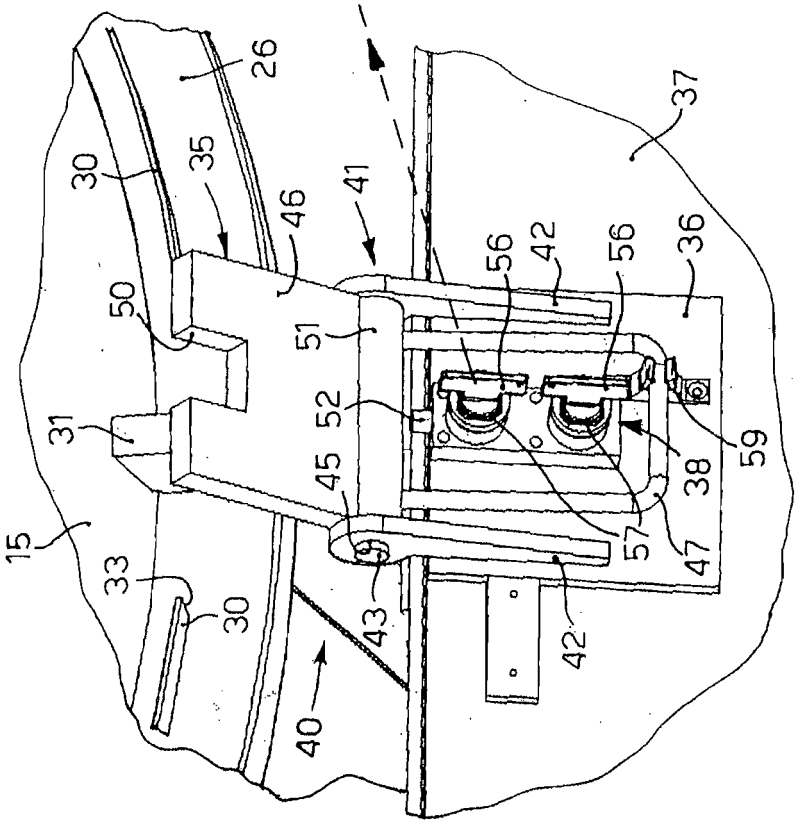
26
30
35
46
41
37
56
42
56
36
50
51
52
31
45
38
59
57
47
15
33
30
43
42
40

fig. 3

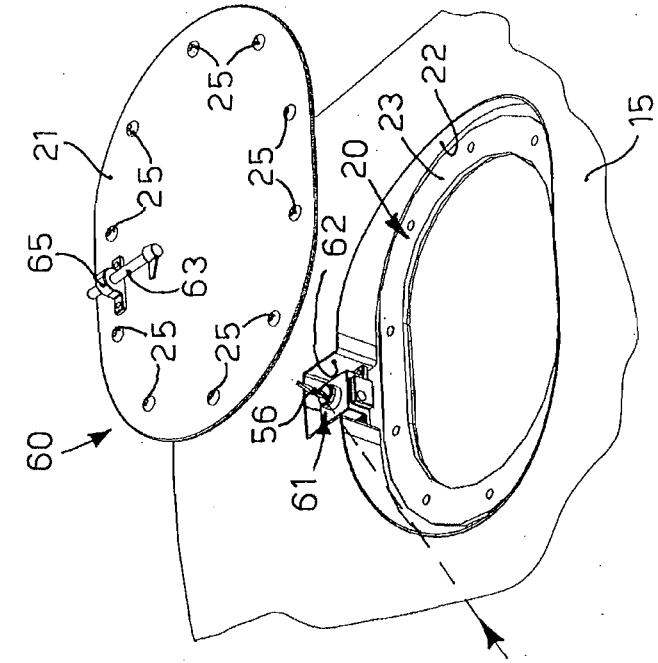
21
25
25
25
25
25
25
65
63
60
56
61
62
20
23
22
15

fig. 6

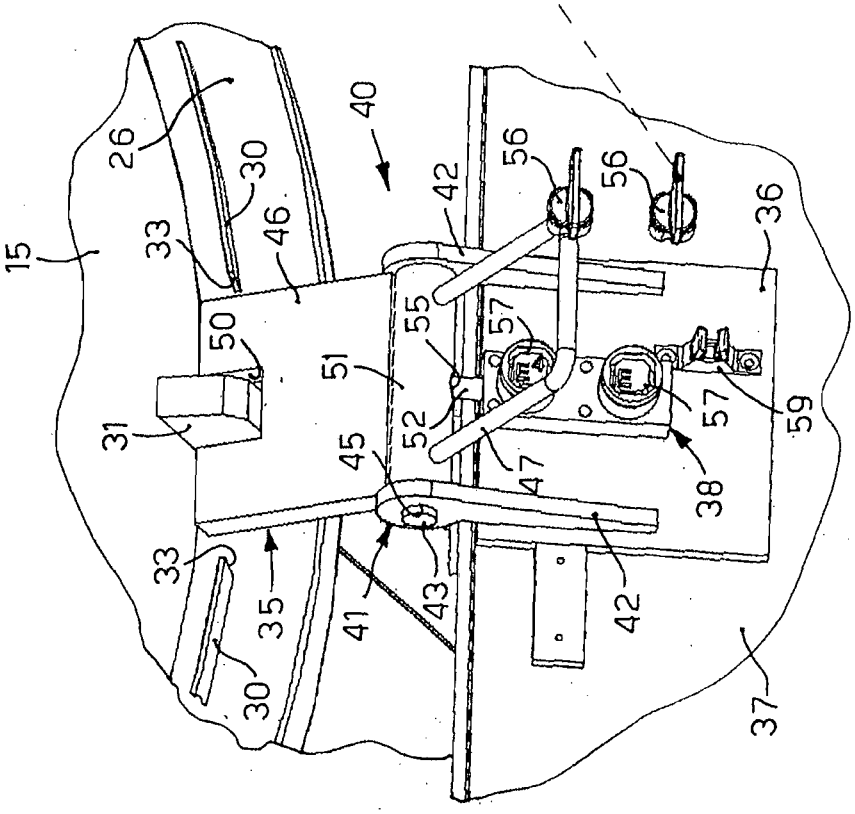
15
26
30
33
46
40
42
56
56
36
50
55
57
51
52
31
45
47
38
57
59
33
35
41
43
42
30
37

fig. 5

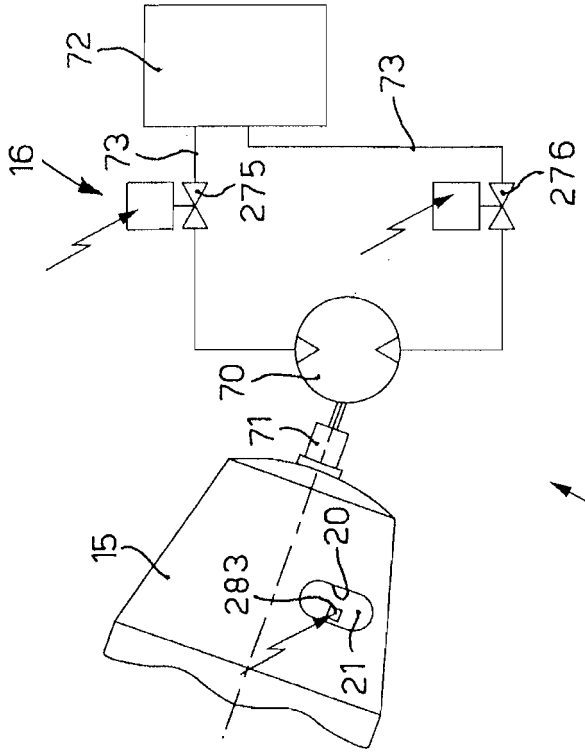
72
73
16
73
275
276
70
71
15
283
20
21
282
217
281

fig. 8

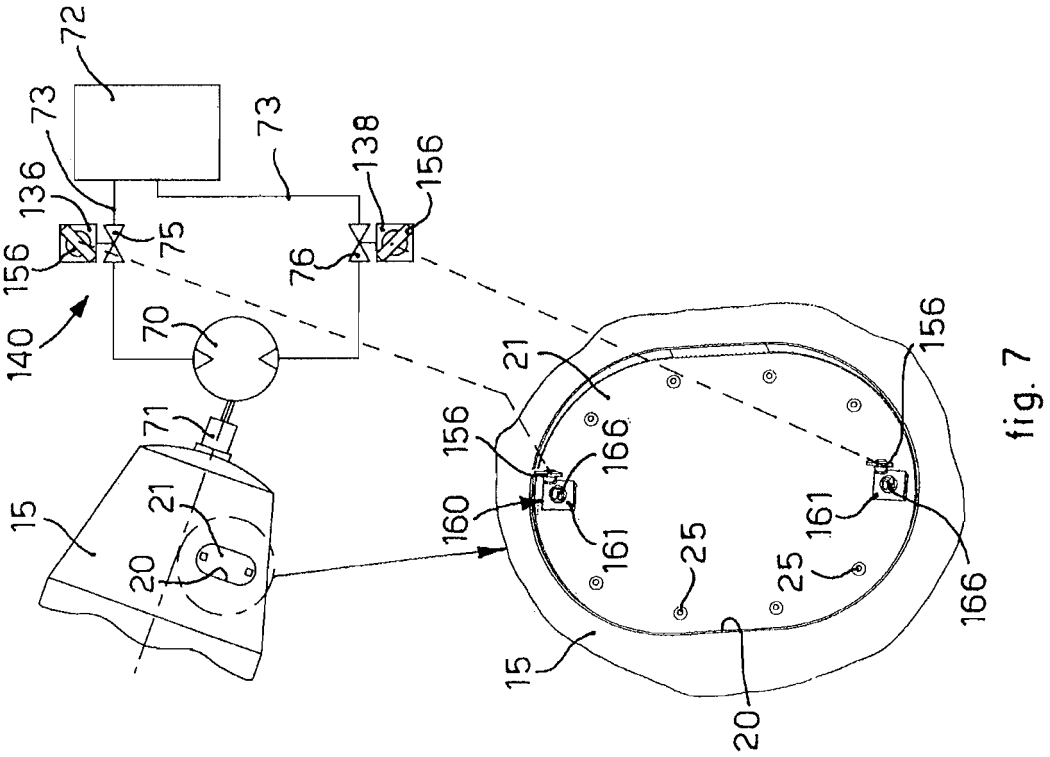
72
73
73
136
138
156
156
75
76
140
70
71
15
21
20
160
21
156
166
161
25
25
161
156
166
15
20

fig. 7

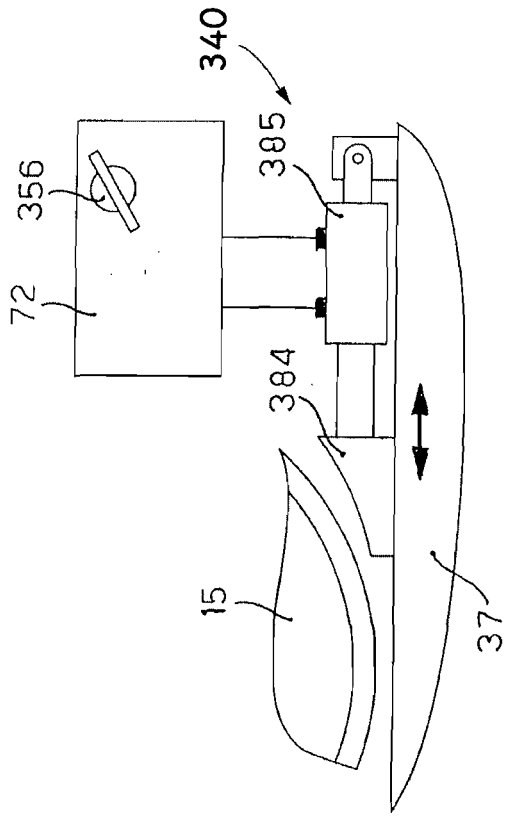

fig. 10

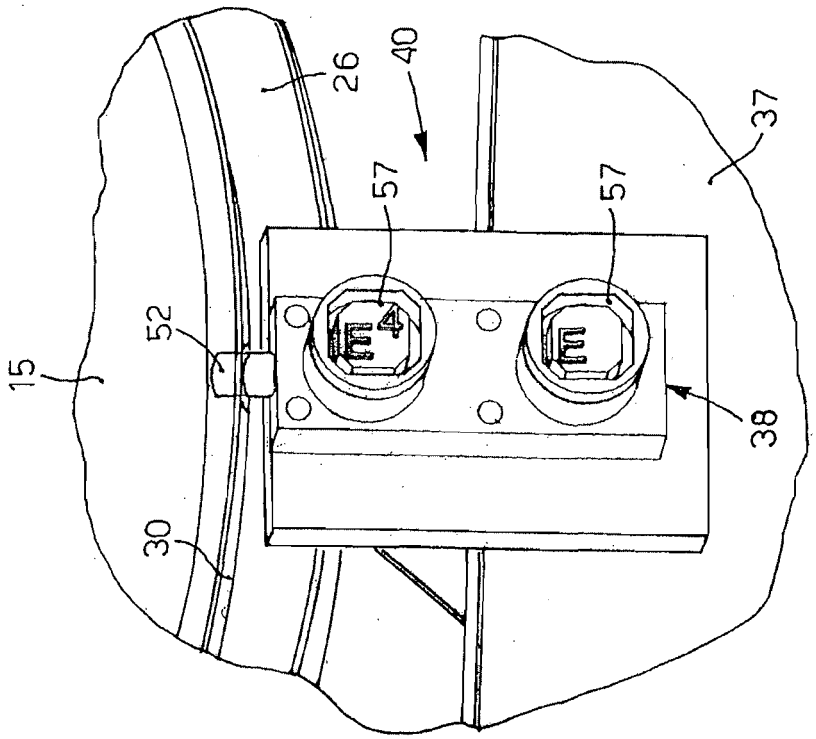

fig. 9

REFERENCES CITED IN THE DESCRIPTION

This list of references cited by the applicant is for the reader's convenience only. It does not form part of the European patent document. Even though great care has been taken in compiling the references, errors or omissions cannot be excluded and the EPO disclaims all liability in this regard.

Patent documents cited in the description

- JP 6144104 A **[0011]**