(19) Europäisches Patentamt
European Patent Office
Office européen des brevets

(11) EP 2 696 152 B1

(12) **EUROPEAN PATENT SPECIFICATION**

(45) Date of publication and mention of the grant of the patent:
12.09.2018 Bulletin 2018/37

(51) Int Cl.:
F25B 39/04 *(2006.01)* ***F25D 11/02*** *(2006.01)*

(21) Application number: **13175387.3**

(22) Date of filing: **05.07.2013**

(54) **Refrigerator and heat exchanger for the same**

Kühlschrank und Wärmetauscher dafür

Réfrigérateur et échangeur de chaleur pour celui-ci

(84) Designated Contracting States:
AL AT BE BG CH CY CZ DE DK EE ES FI FR GB GR HR HU IE IS IT LI LT LU LV MC MK MT NL NO PL PT RO RS SE SI SK SM TR

(30) Priority: **06.07.2012 KR 20120074211**

(43) Date of publication of application:
12.02.2014 Bulletin 2014/07

(73) Proprietor: **Samsung Electronics Co., Ltd.**
Gyeonggi-do 443-742 (KR)

(72) Inventors:
- **Kim Ki Hyun**
  Gwangju (KR)
- **Kim, Myoung Hun**
  Gyeongsangnam-do (KR)
- **Kim, Hooi Joong**
  Gyeonggi-do (KR)
- **Choi, Ho**
  Gyeonggi-do (KR)

(74) Representative: **Lorenz, Sönke et al**
Gulde & Partner
Patent- und Rechtsanwaltskanzlei mbB
Wallstraße 58/59
10179 Berlin (DE)

(56) References cited:
WO-A2-2010/114975 **DE-A1- 19 957 307**
JP-A- H03 125 889 **KR-A- 20110 071 167**
US-A- 2 493 488 **US-A- 5 097 897**
US-A1- 2002 179 294 **US-A1- 2012 060 545**

Note: Within nine months of the publication of the mention of the grant of the European patent in the European Patent Bulletin, any person may give notice to the European Patent Office of opposition to that patent, in accordance with the Implementing Regulations. Notice of opposition shall not be deemed to have been filed until the opposition fee has been paid. (Art. 99(1) European Patent Convention).

Printed by Jouve, 75001 PARIS (FR)

Description

BACKGROUND

1. Field

[0001] The present invention and embodiments thereof relate to a refrigerator that individually cools a freezer compartment and a refrigerator compartment using two compressors and a refrigerating unit for the refrigerator.

2. Description of the Related Art

[0002] In general, a refrigerator is a home appliance that keeps food fresh by including a storage compartment for storing food and a refrigerating unit for supplying cold air to the storage compartment in a refrigerating cycle. The storage compartment is divided into a refrigerator compartment in which food is refrigerated and a freezer compartment in which food is stored in a frozen state.

[0003] The refrigerating unit includes a compressor for compressing a gas refrigerant at a high temperature under a high pressure, a condenser for condensing the compressed refrigerant into a liquid state, an expansion valve for expanding the condensed refrigerant, and an evaporator for evaporating a liquid refrigerant so as to generate cold air.

[0004] A refrigerator according to the related art circulates one refrigerating cycle using one compressor so as to cool the refrigerator compartment and the freezer compartment in different temperature ranges. Thus, the evaporator of the storage compartment is subcooled, and waste of power consumption occurs. In US 5097897 a refrigerator is disclosed comprising two independent refrigeration cycles using a common condenser.

SUMMARY

[0005] Therefore, it is an aspect of the present disclosure to provide a refrigerator having a refrigerating unit that circulates two refrigerating cycles using two compressors.

[0006] It is another aspect of the present disclosure to provide a machine compartment heat dissipation structure of a refrigerator having a refrigerating unit that circulates two refrigerating cycles using two compressors, whereby heat generated in two refrigerating cycles may be effectively dissipated.

[0007] It is another aspect of the present disclosure to provide a machine compartment arrangement structure of a refrigerator having a refrigerating unit that circulates two refrigerating cycles using two compressors, whereby a heat dissipation effect within a limited capacity of a machine compartment may be improved.

[0008] It is another aspect of the present disclosure to provide a structure of a dual path condenser that may dissipate heat generated in two refrigerating cycles effectively.

[0009] Additional aspects of the disclosure will be set forth in part in the description which follows and, in part, will be apparent from the description, or may be learned by practice of the disclosure.

[0010] In accordance with the invention, there is provided a refrigerator according to claim 1.

[0011] The dual path condenser may further include a first inlet through which the first refrigerant is introduced; a first outlet through which the first refrigerant flows out after passing through the first condensation path and being condensed; a second inlet through which the second refrigerant is introduced; and a second outlet through which the second refrigerant flows out after passing through the second condensation path and being condensed.

[0012] The dual path condenser may further include at least one header in which the first inlet, the first outlet, the second inlet and the second outlet are formed.

[0013] Each of the heat dissipation fins may have a width corresponding to a width of the tube, and the heat dissipation fins may be formed as one body.

[0014] The refrigerator may further include a machine compartment formed in the body, and the first compressor, the second compressor, and the dual path condenser may be disposed in the machine compartment.

[0015] The refrigerator may further include a blower fan disposed in the machine compartment so as to cool the first compressor, the second compressor, and the dual path condenser.

[0016] The first compressor may be disposed at one side of an inside of the machine compartment, the second compressor may be disposed at the other side of the inside of the machine compartment, and the dual path condenser and the blower fan may be disposed between the first compressor and the second compressor.

[0017] The blower fan may allow air to forcibly flow from one of the first compressor and the second compressor having a relatively small amount of heat generation toward the other one of the first compressor and the second compressor.

BRIEF DESCRIPTION OF THE DRAWINGS

[0018] These and/or other aspects of the disclosure will become apparent and more readily appreciated from the following description of examples, of the invention and of embodiments thereof taken in conjunction with the accompanying drawings of which:

FIG. 1 is a view illustrating a refrigerating cycle of a refrigerator according to an example not part of the invention;

FIG. 2 is a view illustrating an arrangement structure of a refrigerating unit of a refrigerator according to an example not part of the invention;

FIG. 3 is a cross-sectional view illustrating an ar-

rangement structure of a machine compartment of the refrigerator of FIG. 2;

FIG. 4 is a cross-sectional view illustrating another arrangement structure of a machine compartment of a refrigerator according to an example not part of the invention;

FIG. 5 is a view illustrating an arrangement structure of a refrigerating unit of a refrigerator according to another example not part of the invention;

FIG. 6 is a view illustrating a state in which a heat dissipation pipe is installed at the refrigerator of FIG. 5;

FIG. 7 is a view illustrating an arrangement structure of a refrigerating unit of a refrigerator according to another example not part of the invention;

FIG. 8 is a view illustrating an arrangement structure of a refrigerating unit of a refrigerator according to another example not part of the invention;

FIG. 9 is a view illustrating a refrigerating cycle of a refrigerator according to an embodiment of the invention;

FIG. 10 is a view illustrating an arrangement structure of a refrigerating unit of a refrigerator according to another embodiment of the present invention;

FIG. 11 is a view illustrating a dual path condenser of the refrigerator of FIG. 10;

FIG. 12 is a view illustrating the dual path condenser of the refrigerator of FIG. 11 in an A direction;

FIG. 13 is a view illustrating a state in which condensation paths of the dual path condenser of the refrigerator of FIG. 12 are unfolded;

FIG. 14 is a view for explaining a structure of a baffle of the dual path condenser of the refrigerator of FIG. 10;

FIG. 15 is a view illustrating a tube of the dual path condenser of the refrigerator of FIG. 10; and

FIG. 16 is a view for explaining the relationship between the baffle and the tube of the dual path condenser of the refrigerator of FIG. 10.

DETAILED DESCRIPTION

[0019] Reference will now be made in detail to the embodiments of the present disclosure, examples of which are illustrated in the accompanying drawings, wherein like reference numerals refer to like elements throughout.

[0020] FIG. 1 is a view illustrating a refrigerating cycle of a refrigerator 1 according to an example, FIG. 2 is a view illustrating an arrangement structure of a refrigerating unit of the refrigerator 1 according to an example, FIG. 3 is a cross-sectional view illustrating an arrangement structure of a machine compartment of the refrigerator 1 of FIG. 2, and FIG. 4 is a cross-sectional view illustrating another arrangement structure of a machine compartment of the refrigerator 1 according to an example. Referring to FIGS. 1 through 4, the refrigerator 1 according to the current example includes a body 10, a plurality of storage compartments 21 and 22 formed in the body 10 so as to store food, and a refrigerating unit that supplies cold air to the storage compartments 21 and 22.

[0021] The body 10 may include an inner case (see 11 of FIG. 6), an outer case (see 12 of FIG. 6) combined with an outer side of the inner case 11, and a heat insulating material (see 13 of FIG. 6) disposed between the inner case 11 and the outer case 12. The plurality of storage compartments 21 and 22 are formed in the inner case 11, and the inner case 11 may be formed of a resin as one body. The outer case 12 forms the exterior of the refrigerator 1 and may be formed of a metal so as to be aesthetically appealing and durable.

[0022] The heat insulating material 13 may be a urethane foam and may be formed by injecting a urethane undiluted solution into the space between the inner case 11 and the outer case 12 after the inner case 11 and the outer case 12 are combined with each other and by foaming and hardening the urethane undiluted solution.

[0023] The body 10 may have the shape of a box having an approximately open front side. The body 10 may have an upper wall 14, a bottom wall 15, a rear wall 19, and both sidewalls 16. Also, the body 10 may have an intermediate wall 18 that partitions the inner space of the body 10 off in right and left directions. The storage compartments 21 and 22 may be divided into a right, first storage compartment 21 and a left, second storage compartment 22 by the intermediate wall 18. Obviously, the intermediate wall 18 includes the heat insulating material 13, and the first storage compartment 21 and the second storage compartment 22 may be insulated from each other.

[0024] Thus, the first storage compartment 21 and the second storage compartment 22 are disposed so that their front sides are open, the open front side of the first storage compartment 21 may be opened or closed by a first door 21a, and the open front side of the second storage compartment 22 may be opened or closed by a second door 22a. The first door 21a and the second door 22a may be hinge-coupled to the body 10 and may rotate.

[0025] The body 10 further includes a front border wall (see 17 of FIG. 8), and the first door 21a and the second door 22a closely contact the front border wall 17 so as to seal the first storage compartment 21 and the second storage compartment 22. The first door 21a and the sec-

ond door 22a may include the heat insulating material 13 so as to insulate the first storage compartment 21 and the second storage compartment 22 from each other.

[0026] In this way, the refrigerator 1 according to the present example may be a so-called side-by-side refrigerator in which the first storage compartment 21 is formed in a right inner side of the body 10, the second storage compartment 22 is formed in a left inner side of the body 10, and each of the compartments 21 and 22 is opened or closed by the rotating first and second doors 21a and 22a that are hinge-coupled to the body 10. Hereinafter, refrigerators will be described on the assumption that they are side-by-side refrigerators. However, the present disclosure is not limited to these side-by-side refrigerators, and any type of a refrigerator having a plurality of storage compartments 21 and 22 may be used.

[0027] The first storage compartment 21 and the second storage compartment 22 may be used for different purposes. That is, the first storage compartment 21 may be used as a freezer compartment, which is maintained at a temperature of about -20 °C or less and in which food can be kept in a frozen state, and the second storage compartment 22 may be used as a refrigerator compartment, which is maintained at a temperature of about 0 °C to 5 °C and in which food can be refrigerated. Of course, the purposes of the first storage compartment 21 and the second storage compartment 22 may be changed. However, the following description is on the assumption that the first storage compartment 21 is used as a freezer compartment and the second storage compartment 22 is used as a refrigerator compartment.

[0028] The refrigerating unit of the refrigerator 1 according to the present example may circulate a plurality of individual refrigerating cycles so as to individually cool the first storage compartment 21 and the second storage compartment 22. To this end, the refrigerating unit may include a first refrigerating unit that supplies cold air to the first storage compartment 21 and a second refrigerating unit that supplies cold air to the second storage compartment 22.

[0029] The first refrigerating unit may circulate a first refrigerant, and the second refrigerating unit may circulate a second refrigerant that is separate from the first refrigerant. However, names, such as the first refrigerant and the second refrigerant, are used only to differentiate refrigerants that circulate in different refrigerating cycles through different refrigerating units from each other, and it does not mean that the types of the first refrigerant and the second refrigerant are different from each other. That is, the first refrigerant and the second refrigerant may be of the same type or different types. For example, the first refrigerant and the second refrigerant may be one selected from the group including R-134a, R-22, R-12, and ammonia.

[0030] The first refrigerating unit may include a first compressor 32 for compressing the first refrigerant at a high temperature under a high pressure, a first condenser 33 for condensing the first refrigerant from a gaseous state to a liquid state, a first expansion valve 34 for expanding the first refrigerant at a low temperature under a low pressure, a first evaporator 35 for evaporating the first refrigerant from a liquid state to a gaseous state, a first refrigerant pipe 36 for guiding the first refrigerant to elements of the first refrigerating unit successively, and a first blower fan 37 that forcibly causes the air of the first storage compartment 21 to flow.

[0031] Here, the first evaporator 35 may evaporate the first refrigerant and may take peripheral latent heat so as to generate cold air, and the generated cold air may be supplied to the first storage compartment 21 through the first blower fan 37.

[0032] The first compressor 32 may be a hermetic reciprocation acting compressor, and the first condenser 33 may be an air-cooled condenser having heat dissipation fins and a tube.

[0033] The first compressor 32 and the first condenser 33 may be disposed in a machine compartment 23 formed in a lower portion of the body 10. The machine compartment 23 is partitioned off from the storage compartments 21 and 22 and is insulated therefrom.

[0034] One side of the machine compartment 23 is open, and a machine compartment cover 25 may be detachably combined with the open side of the machine compartment 23. Ventilators 26a and 26b may be formed in the machine compartment cover 25. The ventilators 26a and 26b may include an inlet 26a through which the air is introduced and an outlet 26b through which the air flows out. A machine compartment blower fan 24 may be disposed in the machine compartment 23.

[0035] The second refrigerating unit may include a second compressor 42 for compressing the second refrigerant at a high temperature under a high pressure, a second condenser 43 for condensing the second refrigerant from a gaseous state to a liquid state, a second expansion valve 44 for expanding the second refrigerant at a low temperature under a low pressure, a second evaporator 45 for evaporating the second refrigerant from a liquid state to a gaseous state, a second refrigerant pipe 46 for guiding the second refrigerant to elements of the second refrigerating unit successively, and a second blower fan 47 that forcibly causes the air of the second storage compartment 22 to flow.

[0036] Here, the second evaporator 45 may evaporate the second refrigerant and may take peripheral latent heat so as to generate cold air. The generated cold air may be supplied to the second storage compartment 22 through the second blower fan 47.

[0037] Here, the second compressor 42 may be a hermetic reciprocation acting compressor that is the same as the first compressor 32. However, the second compressor 42 has a smaller load than the first compressor 32 and thus may have a smaller size than the first compressor 32. Also, the second compressor 42 may be disposed in the machine compartment 23 together with the first compressor 32 and the first condenser 33. The second compressor 42 may be cooled by forcible flow of air

caused by the machine compartment blower fan 24 together with the first compressor 32 and the first condenser 33.

[0038] The second condenser 43 may not be disposed in the machine compartment 23, unlike the first compressor 32, the first condenser 33, and the second compressor 42. Also, the second condenser 43 may be a heat dissipation pipe 43a, unlike the first condenser 33. Additional heat dissipation fins may not be attached to the heat dissipation pipe 43a. Instead, the heat dissipation pipe 43a may have a shape that is bent in a zigzag form several times, so as to increase a heat dissipation area.

[0039] The heat dissipation pipe 43a may be disposed on an outer side of the rear wall 19 of the body 10 so as to be exposed to the outside, as illustrated in FIG. 2. Furthermore, the heat dissipation pipe 43a may be attached to the outer surface of the outer case 12 so that heat of the heat dissipation pipe 43a can be transferred to the outer case 12 and the heat dissipation area can be further increased. The heat dissipation pipe 43a may be cooled by natural convection of air.

[0040] In this way, not all of the first compressor 32, the first condenser 33, the second compressor 42, and the second condenser 43 are disposed in the machine compartment 23 but the first compressor 32, the first condenser 33, and the second compressor 42 are disposed in the machine compartment 23, and the second condenser 43 is disposed outside the machine compartment 23 so that complexity of the machine compartment 23 can be avoided and a heat dissipation effect can be improved.

[0041] Of course, by increasing the space of the machine compartment 23, all of the first compressor 32, the first condenser 33, the second compressor 42, and the second condenser 43 may be disposed in the machine compartment 23; however, this causes a reduction in the space of the storage compartments 21 and 22 compared to the size of the body 10 and thus is not preferable.

[0042] The internal arrangement of the machine compartment 23 may be configured in such a way that the first compressor 32 is disposed at one side of the inside of the machine compartment 23 and the second compressor 42 is disposed at the other side of the inside of the machine compartment 23, as illustrated in FIGS. 2 and 3. That is, the first compressor 32 may be disposed to be slanted toward one sidewall 16a of the machine compartment 23 from the center of the inside of the machine compartment 23, and the second compressor 42 may be disposed to be slanted toward the other sidewall 16b of the machine compartment 23 from the center of the inside of the machine compartment 23.

[0043] As illustrated in FIGS. 2 and 3, the first compressor 32 is disposed at a lower side of the first storage compartment 21, and the second compressor 42 is disposed at a lower side of the second storage compartment 22. However, aspects of the present disclosure are not limited thereto, and the positions of the first compressor 32 and the second compressor 42 may be changed. However, in consideration of a load applied to the bottom wall 15, it is sufficient if the first compressor 32 and the second compressor 42 are disposed at both sides of the machine compartment 23.

[0044] In addition, the first condenser 33 and the machine compartment blower fan 24 may be disposed between the first compressor 32 and the second compressor 42 in approximately one straight line. In FIGS. 2 and 3, the first compressor 32, the machine compartment blower fan 24, the first condenser 33, and the second compressor 42 are successively disposed. However, unlike this, the first compressor 32, the first condenser 33, the machine compartment blower fan 24, and the second compressor 42 may be successively disposed, as illustrated in FIG. 4.

[0045] In this case, the machine compartment blower fan 24 may include fan wings 24a that forcibly cause the air to flow and a fan motor 24b that drives the fan wings 24a. The machine compartment blower fan 24 may be an axial flow fan in which a direction of wind is the same as a direction of a rotation shaft.

[0046] Also, the air flow direction of the machine compartment 23 may be directed from the second compressor 42 toward the first compressor 32. That is, the air that is introduced into the machine compartment 23 through the inlet 26a may cool the second compressor 42, the first condenser 33, and the first compressor 32 successively and may flow out from the machine compartment 23 through the outlet 26b.

[0047] That is, in the arrangement structure of FIG. 3, the machine compartment blower fan 24 absorbs the air from the first condenser 33 and ejects the air toward the first compressor 32, and in the arrangement structure of FIG. 4, the machine compartment blower fan 24 absorbs the air from the second compressor 42 and ejects the air toward the first condenser 33.

[0048] Due to this air flow direction, heat dissipation of the first compressor 32 (freezer compartment) having a relatively larger amount of heat generation than the second compressor 42 can be prevented from affecting heat dissipation of the first condensers 33 and the second compressor 42 (refrigerator compartment), and energy consumed for heat dissipation of the machine compartment 23 can be reduced. Thus, damage caused by a lowered heat exchange efficiency of the first condenser 33 and overload of the second compressor 42 can be prevented.

[0049] FIG. 5 is a view illustrating an arrangement structure of a refrigerating unit of a refrigerator 2 according to another example, and FIG. 6 is a view illustrating a state in which a heat dissipation pipe is installed at the refrigerator 2 of FIG. 5.

[0050] The arrangement structure of a refrigerating unit of the refrigerator 2 according to another example will be described with reference to FIGS. 5 and 6. Like reference numerals are used for like elements from FIGS. 1 through 4, and the description thereof may be omitted.

[0051] The refrigerating unit of the refrigerator 2 ac-

cording to the present example has the same configuration as the refrigerator 1 of FIG. 1 except for the position of a second condenser.

[0052] That is, the second condenser is configured as a heat dissipation pipe 43b, and the heat dissipation pipe 43b may be disposed in a rear wall 19 of a body 10, unlike in FIGS. 1 through 4.

[0053] In detail, the heat dissipation pipe 43b may be disposed between an inner case 11 and an outer case 12 of the rear wall 19. In particular, the heat dissipation pipe 43b may be disposed to contact the inner surface of the outer case 12. In this case, the heat dissipation pipe 43b may be attached to the inner surface of the outer case 12 using an aluminum tape 20 having high thermal conductivity.

[0054] Thus, heat of a refrigerant that passes through the heat dissipation pipe 43b may be transferred to the outer case 12 via the aluminum tape 20 or may be dissipated through the outer case 12 by natural convection of air. Also, heat of the refrigerant that passes through the heat dissipation pipe 43b may be prevented from being transferred to the inner case 11 using a heat insulating material 13. Thus, the risk of heat of the heat dissipation pipe 43b penetrating into storage compartments 21 and 22 can be prevented.

[0055] The heat dissipation pipe 43b may be attached to the inner surface of the outer case 12 using the aluminum tape 20 before the inner case 11 and the outer case 12 are combined with each other, and after the inner case 11 and the outer case 12 are combined with each other, the heat dissipation pipe 43b may be firmly supported by the heat insulating material 13 that foams and is hardened in the space between the inner case 11 and the outer case 12.

[0056] In this manner, the heat dissipation pipe 43b is disposed between the inner case 11 and the outer case 12 and thus may not be exposed to the outside. Thus, a sufficient arrangement space of the refrigerator 2 compared to the refrigerator 1 of FIG. 1 can be obtained, and the appearance of the refrigerator 2 can be improved.

[0057] FIG. 7 is a view illustrating an arrangement structure of a refrigerating unit of a refrigerator 3 according to another example, and FIG. 8 is a view illustrating an arrangement structure of a refrigerating unit of a refrigerator 4 according to another example.

[0058] The arrangement structure of the refrigerating unit of the refrigerator 3 according to another example and the arrangement structure of the refrigerating unit of the refrigerator 4 according to another example will be described with reference to FIGS. 7 and 8. Like reference numerals are used for like elements from FIGS. 1 through 4 and FIGS. 5 and 6, and the description thereof may be omitted.

[0059] As illustrated in FIG. 7, a second condenser of the refrigerator 3 according to the present example is configured as a heat dissipation pipe 43c, and the heat dissipation pipe 43c may be disposed on both sidewalls 16 of a body 10.

[0060] As in FIGS. 5 and 6, the heat dissipation pipe 43c may be disposed between an inner case (see 11 of FIG. 5) and an outer case (see 12 of FIG. 5), may be attached to the inner surface of the outer case 12 using an aluminum tape (see 20 of FIG. 5), and may be supported by a heat insulating material (see 13 of FIG. 5).

[0061] As illustrated in FIG. 8, a second condenser of the refrigerator 4 according to the present example is configured as a heat dissipation pipe 43d, and the heat dissipation pipe 43d may be disposed on a front border wall 17 of the body 10.

[0062] As in FIGS. 5 and 6 and FIG. 7, the heat dissipation pipe 43d may be disposed between an inner case (see 11 of FIG. 5) and an outer case (see 12 of FIG. 5), may be attached to the inner surface of the outer case 12 using an aluminum tape (see 20 of FIG. 5), and may be supported by a heat insulating material (see 13 of FIG. 5). In this case, the heat dissipation pipe 43d may perform the function of preventing frost formation on the front border wall 17 due to a temperature change caused by opening/closing doors 21a and 22a. In FIG. 8, the heat dissipation pipe 43d is disposed only in a place at which the second door 22a closely contacts the front border wall 17. However, of course, the heat dissipation pipe 43d may extend and may be installed at a place at which the first door 21a closely contacts the front border wall 17.

[0063] As above, configurations and arrangements of the refrigerating units illustrated in FIGS. 1 through 8 have been described. In this way, the first compressor 32, the first condenser 33, and the second compressor 42 are cooled by forcible flow of air caused by the machine compartment blower fan 24, and the second condenser 43 is disposed outside the machine compartment 23 and is cooled by natural convection of air. Thus, cooling in a plurality of refrigerating cycles that are individually circulated can be effectively performed, the refrigerating units can be disposed without increasing the capacity of the machine compartment 23, and energy consumed for heat dissipation of the machine compartment 23 can be reduced.

[0064] FIG. 9 is a view illustrating a refrigerating cycle of a refrigerator 5 according to the invention, and FIG. 10 is a view illustrating an arrangement structure of a refrigerating unit of the refrigerator 5 according to the invention.

[0065] The refrigerating cycle of the refrigerator 5 and the structure of the refrigerating unit according to the invention will be described with reference to FIGS. 9 and 10. Like reference numerals are used for like elements from FIGS. 1 through 8, and the description thereof may be omitted.

[0066] The refrigerating unit of the refrigerator 5 according to the present invention is circulating a plurality of individual refrigerating cycles so as to individually cool a first storage compartment 21 and a second storage compartment 22, as illustrated in FIGS. 1 through 8. To this end, the refrigerating unit includes a first refrigerating unit for supplying cold air to the first storage compartment

21 and a second refrigerating unit for supplying cold air to the second storage compartment 22. The first refrigerating unit circulates a first refrigerant, and the second refrigerating unit circulates a second refrigerant that is separate from the first refrigerant.

[0067] The first refrigerating unit may include a first compressor 32, a dual path condenser 101, a first expansion valve 34, a first evaporator 35, a first blower fan 37, and a first refrigerant pipe 36, and the second refrigerating unit may include a second compressor 42, a dual path condenser 101, a second expansion valve 44, a second evaporator 45, a second blower fan 47, and a second refrigerant pipe 46.

[0068] That is, the first refrigerating unit and the second refrigerating unit share the dual path condenser 101 for condensing the refrigerant. The dual path condenser 101 is a condenser in which a plurality of condensers are integrated with each other, so as to increase space utility and heat exchange efficiency. The dual path condenser 101 includes a first condensation path (see 141 of FIG. 13) through which the first refrigerant passes, and a second condensation path (see 142 of FIG. 3) through which the second refrigerant passes and condenses both the first refrigerant and the second refrigerant. Here, the first condensation path 141 and the second condensation path 142 are individually formed. The detailed configuration of the dual path condenser 101 will be described again later.

[0069] As illustrated in FIGS. 9 and 10, the dual path condenser 101 may be disposed in a machine compartment 23 together with the first compressor 32 and the second compressor 42. Since both the first refrigerant in a first refrigerating cycle and the second refrigerant in a second refrigerating cycle are condensed by the dual path condenser 101, no additional condenser other than the dual path condenser 101 is required in the refrigerator 5 illustrated in FIGS. 9 and 10.

[0070] The internal arrangement of the machine compartment 23 may be the same as those of FIGS. 1 through 8. That is, the first compressor 32 and the second compressor 42 may be disposed at both sides of the machine compartment 23, and the dual path condenser 101 may be disposed between the first compressor 32 and the second compressor 42. A machine compartment blower fan 24 may allow air to flow in the direction of the second compressor 42, the dual path condenser 101, and the first compressor 32.

[0071] FIG. 11 is a view illustrating a dual path condenser 101 of the refrigerator 5 of FIG. 10, FIG. 12 is a view illustrating the dual path condenser of the refrigerator of FIG. 11 in an A direction, FIG. 13 is a view illustrating a state in which condensation paths of the dual path condenser of the refrigerator of FIG. 12 are unfolded, FIG. 14 is a view for explaining a structure of a baffle of the dual path condenser 101 of the refrigerator 5 of FIG. 10, FIG. 15 is a view illustrating a tube of the dual path condenser 101 of the refrigerator 5 of FIG. 10, and FIG. 16 is a view for explaining the relationship between the baffle and the tube of the dual path condenser 101 of the refrigerator 5 of FIG. 10.

[0072] The configuration of the dual path condenser 101 according to embodiments of the present invention will be described with reference to FIGS. 11 through 16 in detail. As illustrated in FIG. 11, the dual path condenser 101 includes a plurality of headers 111 and 112 through which a refrigerant is introduced or flows out, a stacked flat tube 121 that allows the space between the plurality of headers 111 and 112 to communicate, and heat dissipation fins 150 that contact the tube 121.

[0073] The plurality of headers 111 and 112 include a first header 111 and a second header 112, and a first inlet 131 through which a first refrigerant is introduced, a second inlet 133 through which a second refrigerant is introduced, and a second outlet 134 through which the second refrigerant flows out may be disposed at the first header 111. A first outlet 132 through which the first refrigerant flows outs may be disposed at the second header 112.

[0074] Obviously, as illustrated in FIG. 10, the first inlet 131 may be connected to the first compressor 32, the first outlet 132 may be connected to the first expansion valve 34, the second inlet 133 may be connected to the second compressor 42, and the second outlet 134 may be connected to the second expansion valve 144.

[0075] Also, as illustrated in FIG. 13, the dual path condenser 101 includes the first condensation path 141 on which the first refrigerant introduced through the first inlet 131 is condensed and is guided to the first outlet 132, and the second condensation path 142 on which the second refrigerant introduced through the second inlet 133 is condensed and is guided to the second outlet 134. The first condensation path 141 and the second condensation path 142 are separately formed so that mixing of the first refrigerant and the second refrigerant may be prevented.

[0076] The first condensation path 141 and the second condensation path 142 may be formed by internal spaces 111f and 112f of the headers 111 and 112 and channels 123 of the tube 121.

[0077] In detail, the first header 111 has an outer wall 111a of which both ends are open and which has the internal space 111f, and an opening 111b that is formed in parallel to the outer wall 111a and communicates with the internal space 111f. In this case, one opening 111b may be formed and may be sealed by the tube 121. Header caps 111d and 111e may be combined with both open ends of the first header 111 and may be sealed.

[0078] Similarly, the second header 112 also has the same configuration as the first header 111, i.e., has an outer wall 112a of which both ends are open and which has the internal space 112f, and an opening 112b that is formed in parallel to the outer wall 112a and communicates with the internal space 112f. In this case, one opening 112b may be formed and may be sealed by the tube 121. Header caps 112d and 112e may be combined with both open ends of the second header 112 and may be sealed.

[0079] The tube 121 is an integrated flat tube having a plurality of channels 123, and predetermined portions of both ends of the tube 121 are inserted into the internal space 111f of the first header 111 and the internal space 112f of the second header 112 through the opening 111b of the first header 111 and the opening 112b of the second header 112.

[0080] In this case, the insertion depth of the tube 121 may be limited by a baffle 160 disposed at the headers 111 and 112. The baffle 160 is disposed in the internal spaces 111f and 112f of the headers 111 and 112 so as to partition off the internal spaces 111f and 112f of the headers 111 and 112 and to guide the flow of the refrigerant. Since the cross-section of the first header 111 is shown in FIG. 13, referring to FIG. 13, a stopper (see 161 of FIG. 14) is formed in the baffle 160 so as to limit the insertion depth of the tube 121.

[0081] A stopper 161 may have the shape of a groove that is depressed toward the inside of the stopper 161 so as to accommodate portions of the tube 121. The stopper 161 may include a first support face 161a that prevents movement in a direction in which the tube 121 is inserted into the headers 111 and 112, and a second support face 161b and a third support face 161c that prevent movement in a direction perpendicular to the insertion direction of the tube 121.

[0082] The baffle 160 may have an insertion protrusion 162 so as to be combined with the headers 111 and 112, and position adjustment holes 111c and 112c through which the insertion protrusion 162 may be inserted are formed in outer walls 111a and 112a that are opposite to the openings 111b and 112b of the headers 111 and 112. Thus, after the position of the baffle 160 is adjusted by inserting the insertion protrusion 162 of the baffle 160 into the position adjustment holes 111c and 112c of the headers 111 and 112, the baffle 160 and the headers 111 and 112 may be combined with each other by brazing.

[0083] The tube 121 is formed as one body, as illustrated in FIG. 15 and may include a flat type body 122 and the plurality of channels 123 through which the refrigerant flows and which are formed on the body 122. The heat dissipation fins 150 contact the body 122. Each of the heat dissipation fins 150 may be disposed to have a width corresponding to the width of the tube 121 so as to effectively dissipate heat transferred to the entire body 122.

[0084] Each of the plurality of channels 123 of the tube 121 may be formed to have a predetermined width WC and a predetermined height HC and may have a simple shape with a uniform gap GC.

[0085] In this case, ends of the tube 121 are inserted into the internal spaces 111f and 112f of the headers 111 and 112. Since the inserted tube 121 is naturally supported by the baffle 160, no additional shape for this support is necessary and thus the tube 121 can be easily manufactured.

[0086] As illustrated in FIG. 13, portions 124 of the plurality of channels 123 constitute portions of the first condensation path 141. This is referred to as a first channel portion 124. Also, the other portions 125 of the channels 123 constitute portions of the second condensation path 142. This is referred to as a second channel portion 125. Thus, the first channel portion 124 is formed at portions of the body 122, and the second channel portion 125 is formed at the other portions of the body 122.

[0087] Here, when the second refrigerating unit does not operate and only the first refrigerating unit operates, i.e., when the refrigerant does not flow through the second channel portion 125 and flows only through the first channel portion 124, heat of the refrigerant is transferred to the entire body 122 and may be dissipated through the entire body 122. That is, even when the refrigerant flows only through the first channel portion 124, heat of the refrigerant is transferred to portions of the body 122 that constitute the first channel portion 124 and the other portions of the body 122 that constitute the second channel portion 125 such that heat dissipation can be performed through the entire body 122.

[0088] In contrast, when the first refrigerating unit does not operate and only the second refrigerating unit operates, i.e., when the refrigerant does not flow through the first channel portion 124 and flows only through the second channel portion 125, heat of the refrigerant is transferred to the entire body 122. Thus, heat dissipation can be performed through the entire body 122.

[0089] Thus, since heat dissipation is performed through the entire body 122 in either case, a heat dissipation area can be increased, and as such, a heat dissipation effect can be improved. Of course, when the first refrigerating unit and the second refrigerating unit operate simultaneously and the refrigerant flows through the first channel portion 124 and the second channel portion 125 simultaneously, the effect of increasing the heat dissipation area may be cancelled out.

[0090] Furthermore, even when the refrigerant flows through one of the first channel portion 124 and the second channel portion 125, heat of the refrigerant is transferred to the entire body 122 and thus may be dissipated through all of the heat dissipation fins 150 that contact the body 122.

[0091] Unlike the integrated tube according to the present invention when a plurality of tubes that are separated from each other are used and the plurality of tubes constitute different condensation paths, the heat dissipation fins 150 contact all of the plurality of tubes so that the effect of increasing the heat dissipation area of the present example can be expected. That is, even when the plurality of tubes are separated from each other, heat may be transferred to the entire body 122 through the heat dissipation fins 150.

[0092] Some of the plurality of channels 123 of the tube 121 may be blocked by the baffle 160. In FIG. 13, channels 123a that are blocked by the baffle 160 are shaded in. In this way, the channels 123a that are blocked by the baffle 160 may not constitute any of the first condensation

path 124 and the second condensation path 125.

[0093] Since the refrigerant may be introduced through the blocked channels 123a and outlets of the blocked channels 123a are blocked by the baffle 160, the flow of the refrigerant does not occur and may be stopped. Of course, even though the channels 123a to be blocked by the baffle 160 may be pre-blocked when the tube 121 is manufactured, this causes an increase in material cost. Thus, it is effective in view of cost and convenience of processing to, as in the present embodiment, manufacture the tube 121 in such a way that the plurality of channels 123 are formed to the predetermined width WC and the uniform gap GC and to block the channels 123a using the baffle 160.

[0094] To this end, the width (see WB of FIG. 16) of the baffle 160 needs to correspond to or to be larger than the width (see WC of FIG. 16) of each channel 123.

[0095] All of the elements of the dual path condenser 101 having the above configuration may be combined with each other by brazing so as to prevent water leakage of the refrigerant. That is, all of the headers 111 and 112, the header caps 111d, 111e, 112d, and 112e, the baffle 160, the tube 121, and the heat dissipation fins 150 may be coated with a cladding material for brazing.

[0096] Thus, the baffle 160 is temporarily combined with the internal spaces 111f and 112f of the headers 111 and 112, the header caps 111d, 111e, 112d, and 112e are put on both open ends of the headers 111 and 112, the tube 121 is inserted into the headers 111 and 112, and the heat dissipation fins 150 are disposed between the tubes 121 and then put into a brazing furnace, thereby manufacturing the dual path condenser 101.

[0097] When the temporarily-manufactured dual path condenser 101 is heated at a temperature of about 600 °C to 700 °C in the brazing furnace, the cladding material coated on the elements of the dual path condenser 101 is melted so that joints of the elements are sealed and simultaneously the elements are firmly joined. Thus, the joints of the elements are required to be formed with a predetermined gap so as to seal spaced gaps using the melted cladding material.

[0098] Here, temporarily forming the baffle 160 in the internal spaces 111f and 112f of the headers 111 and 112 may be easily performed by inserting the insertion protrusion 162 of the baffle 160 into the position adjustment holes 111c and 112c of the headers 111 and 112.

[0099] Obviously, the structure of the dual path condenser 101 according to the current embodiments of the present invention does not apply only to a condenser but may apply to an evaporator, a refrigerator, and an air conditioner.

[0100] As described above, the refrigerating unit of FIG. 10 is a refrigerating unit that circulates a plurality of refrigerating cycles individually. The refrigerating unit of FIG. 10 includes the plurality of individual condensation paths 141 and 142, the tube 121 that is formed as one body so as to dissipate heat of the refrigerant through the entire body even when the refrigerant flows through one of the plurality of condensation paths 141 and 142, and the dual path condenser 101 having the integrated heat dissipation fins 150.

[0101] Therefore, all heat generation elements may be disposed in the machine compartment 23 with the limited capacity, a heat dissipation efficiency of a plurality of refrigerating cycles can be improved, and energy consumed for heat dissipation can be reduced.

[0102] According to the present disclosure, since a refrigerator circulates two refrigerating cycles individually using two compressors, a freezer compartment and a refrigerator compartment are cooled in different temperature ranges so that power consumption can be reduced.

[0103] In this case, heat generated in two refrigerating cycles can be effectively dissipated.

[0104] Also, since two compressors and one condenser are disposed in a machine compartment, the machine compartment can be easily arranged.

[0105] In particular, using a dual path condenser having two condensation paths that are individually formed, two refrigerating cycles can be circulated using one condenser so that the space utility of the machine compartment can be increased.

[0106] Although a few embodiments of the present disclosure have been shown and described, it would be appreciated by those skilled in the art that changes may be made in these embodiments without departing from the principles of the invention, the scope of which is defined in the claims.

Claims

1. A refrigerator (1) comprising:

a body (10);
a first storage compartment (21) formed in the body;
a second storage compartment (22) that is formed in the body (10) and insulated from the first storage compartment;
a first refrigerating unit (32,34,35) comprising a first compressor (32) for compressing a first refrigerant, a first expansion valve (34) for expanding the first refrigerant, and a first evaporator (35) for evaporating the first refrigerant, the first refrigerating unit supplying cold air to the first storage compartment (21);
a second refrigerating unit (42,44,45) comprising a second compressor (42) for compressing a second refrigerant, a second expansion valve (44) for expanding the second refrigerant, and a second evaporator (45) for evaporating the second refrigerant, the second refrigerating unit supplying cold air to the second storage compartment (22); **characterized in that** the refrigerator further comprises
a dual path condenser (101) comprising a flat

tube (121) formed as one body (122) which has a plurality of channels (123,123a) formed in the body and heat dissipation fins (150) that contact the body (122), wherein portions (124) of the plurality of channels constitute a first condensation path (141) on which the first refrigerant is condensed, and other portions (125) of the plurality of channels constitute a second condensation path (142) which is formed independently of the first condensation path (141) and on which the second refrigerant is condensed, and heat of the refrigerant that passes through one of the first condensation path and the second condensation path is transferred to the entire body and is dissipated through the entire body.

2. The refrigerator according to claim 1, wherein the dual path condenser (101) further comprises:

a first inlet (131) through which the first refrigerant is introduced;
a first outlet (132) through which the first refrigerant flows out after passing through the first condensation path (141) and being condensed;
a second inlet (133) through which the second refrigerant is introduced; and
a second outlet (134) through which the second refrigerant flows out after passing through the second condensation path (142) and being condensed.

3. The refrigerator according to claim 2, wherein the dual path condenser (101) further comprises at least one header (111,112) in which the first inlet (131), the first outlet (132), the second inlet (133) and the second outlet (134) are formed.

4. The refrigerator according to claim 1, wherein each of the heat dissipation fins (150) has a width corresponding to a width of the tube (121), and the heat dissipation fins are formed as one body.

5. The refrigerator according to claim 1, further comprising a machine
compartment (23) formed in the body (10),
wherein the first compressor (32), the second compressor (42), and the dual path condenser (101) are disposed in the machine compartment.

6. The refrigerator according to claim 5, further comprising a blower fan (24) disposed in the machine compartment (23) so as to cool the first compressor (32), the second compressor (42), and the dual path condenser (101).

7. The refrigerator according to claim 6, wherein the first compressor (32) is disposed at one side of an inside of the machine compartment (23), the second compressor (42) is disposed at the other side of the inside of the machine compartment, and the dual path condenser (101) and the blower fan (24) are disposed between the first compressor and the second compressor.

8. The refrigerator according to claim 7, wherein the blower fan (24) allows
air to forcibly flow from one of the first compressor (32) and the second compressor (42) having a relatively small amount of heat generation toward the other one of the first compressor and the second compressor.

Patentansprüche

1. Ein Kühlschrank (1), aufweisend:

einen Körper (10);
ein erstes Aufbewahrungsfach (21), das im Körper ausgebildet ist;
ein zweites Aufbewahrungsfach (22), das im Körper (10) ausgebildet ist und vom ersten Aufbewahrungsfach isoliert ist;
eine erste Kühleinheit (32, 34, 35), die einen ersten Kompressor (32) zum Komprimieren eines ersten Kühlmittels, ein erstes Expansionsventil (34) zum Expandieren des ersten Kühlmittels und einen ersten Verdampfer (35) zum Verdampfen des ersten Kühlmittels aufweist, wobei die erste Kühleinheit dem ersten Aufbewahrungsfach (21) kalte Luft zuführt;
eine zweite Kühleinheit (42, 44, 45), die einen zweiten Kompressor (42) zum Komprimieren eines zweiten Kühlmittels, ein zweites Expansionsventil (44) zum Expandieren des zweiten Kühlmittels und einen zweiten Verdampfer (45) zum Verdampfen des zweiten Kühlmittels aufweist, wobei die zweite Kühleinheit dem zweiten Aufbewahrungsfach (22) kalte Luft zuführt;
dadurch gekennzeichnet, dass der Kühlschrank ferner aufweist
einen Zwei-Wege-Kondensator (101), der ein flaches Rohr (121), das als ein Körper (122) ausgebildet ist, der eine Vielzahl von Kanälen (123, 123a), die im Körper ausgebildet sind, aufweist, und Wärmeableitungsrippen (150), die mit dem Körper (122) in Kontakt stehen, aufweist, wobei Abschnitte (124) der Vielzahl der Kanäle einen ersten Kondensationsweg (141), auf dem das erste Kühlmittel kondensiert wird, bilden und weitere Abschnitte (125) der Vielzahl der Kanäle einen zweiten Kondensationsweg (142), der unabhängig vom ersten Kondensationsweg (141) ausgebildet wird und auf dem das zweite Kühlmittel kondensiert wird, bilden, und wobei Wärme des Kühlmittels, das durch einen des ersten

Kondensationswegs und des zweiten Kondensationswegs strömt, zum gesamten Körper übertragen wird und durch den gesamten Körper abgeleitet wird.

2. Der Kühlschrank nach Anspruch 1, wobei der Zwei-Wege-Kondensator (101) ferner aufweist:

einen ersten Einlass (131), durch den das erste Kühlmittel eingeleitet wird;
einen ersten Auslass (132), durch den das erste Kühlmittel ausfließt, nachdem es durch den ersten Kondensationsweg (141) strömte und kondensiert wurde;
einen zweiten Einlass (133), durch den das zweite Kühlmittel eingeleitet wird; und
einen zweiten Auslass (134), durch den das zweite Kühlmittel ausfließt, nachdem es durch den zweiten Kondensationsweg (142) strömte und kondensiert wurde.

3. Der Kühlschrank nach Anspruch 2, wobei den Zwei-Wege-Kondensator (101) ferner zumindest ein Kopfstück (111, 112), in dem der erste Einlass (131), der erste Auslass (132), der zweite Einlass (133) und der zweite Auslass (134) ausgebildet sind, aufweist.

4. Der Kühlschrank nach Anspruch 1, wobei jede der Wärmeableitungsrippen (150) eine Breite, die einer Breite des Rohrs (121) entspricht, aufweist, und wobei die Wärmeableitungsrippen als ein Körper ausgebildet sind.

5. Der Kühlschrank nach Anspruch 1, ferner aufweisend ein Maschinenfach (23), das im Körper (10) ausgebildet ist,
wobei der erste Kompressor (32), der zweite Kompressor (42) und der Zwei-Wege-Kondensator (101) im Maschinenfach angeordnet sind.

6. Der Kühlschrank nach Anspruch 5, ferner aufweisend ein Gebläse (24), das im Maschinenfach (23) angeordnet ist, um den ersten Kompressor (32), den zweiten Kompressor (42) und den Zwei-Wege-Kondensator (101) zu kühlen.

7. Der Kühlschrank nach Anspruch 6, wobei der erste Kompressor (32) an einer Seite einer Innenseite des Maschinenfachs (23) angeordnet ist, der zweite Kompressor (42) an der anderen Seite der Innenseite des Maschinenfachs angeordnet ist und der Zwei-Wege-Kondensator (101) und das Gebläse (24) zwischen dem ersten Kompressor und dem zweiten Kompressor angeordnet sind.

8. Der Kühlschrank nach Anspruch 7, wobei das Gebläse (24) ermöglicht, dass Luft zwangsweise von einem des ersten Kompressors (32) und des zweiten Kompressors (42), der eine relativ kleinere Menge an Wärmeerzeugung aufweist, in Richtung des anderen Kompressors strömt.

Revendications

1. Un réfrigérateur (1), comprenant:

un corps (10) ;
un premier compartiment de stockage (21) formé dans le corps ;
un second compartiment de stockage (22) qui est formé dans le corps (10) et isolé du premier compartiment de stockage ;
une première unité frigorifique (32, 34, 35) comprenant un premier compresseur (32) destiné à comprimer un premier réfrigérant, une première vanne d'expansion (34) destinée à permettre l'expansion du premier réfrigérant, et un premier évaporateur (35) destiné à faire évaporer le premier réfrigérant, la première unité frigorifique fournissant de l'air froid au premier compartiment de stockage (21) ;
une seconde unité frigorifique (42, 44, 45) comprenant un second compresseur (42) destiné à comprimer un second réfrigérant, une seconde vanne d'expansion (44) destinée à permettre l'expansion du second réfrigérant, et un second évaporateur (45) destiné à faire évaporer le second réfrigérant, la seconde unité frigorifique fournissant de l'air froid au second compartiment de stockage (22) ;
caractérisé en ce que le réfrigérateur comprend en outre
un condenseur à deux voies (101) comprenant un tube plat (121) formé comme un seul corps (122) qui a une pluralité de canaux (123, 123a) formés dans le corps, et des ailettes de dissipation de chaleur (150) qui sont en contact avec le corps (122), des parties (124) de la pluralité de canaux constituant une première voie de condensation (141) sur laquelle le premier réfrigérant est condensé, et des autres parties (125) de la pluralité de canaux constituant une seconde voie de condensation (142) qui est formée indépendamment de la première voie de condensation (141) et sur laquelle le second réfrigérant est condensé, et de la chaleur du réfrigérant qui traverse l'une de la première voie de condensation et de la seconde voie de condensation étant transférée au corps entier et étant dissipée à travers le corps entier.

2. Le réfrigérateur selon la revendication 1, dans lequel le condenseur à deux voies (101) comprend en outre :

une première entrée (131) par laquelle le premier réfrigérant est introduit ;
une première sortie (132) par laquelle le premier réfrigérant sort après avoir traversé la première voie de condensation (141) et étant condensé ;
une seconde entrée (133) par laquelle le second réfrigérant est introduit ; et
une seconde sortie (134) par laquelle le second réfrigérant sort après avoir traversé la seconde voie de condensation (142) et étant condensé.

3. Le réfrigérateur selon la revendication 2, dans lequel le condenseur à deux voies (101) comprend en outre au moins une tête (111, 112) dans laquelle sont formées la première entrée (131), la première sortie (132), la seconde entrée (133) et la seconde sortie (134).

4. Le réfrigérateur selon la revendication 1, dans lequel chacune des ailettes de dissipation de chaleur (150) a une largeur correspondant à une largeur du tube (121), et les ailettes de dissipation de chaleur sont formées comme un seul corps.

5. Le réfrigérateur selon la revendication 1, comprenant en outre un compartiment de machine (23) formé dans le corps (10),
le premier compresseur (32), le second compresseur (42) et le condenseur à deux voies (101) étant disposés dans le compartiment de machine.

6. Le réfrigérateur selon la revendication 5, comprenant en outre un ventilateur soufflant (24) disposé dans le compartiment de machine (23) de manière à refroidir le premier compresseur (32), le second compresseur (42) et le condenseur à deux voies (101).

7. Le réfrigérateur selon la revendication 6, dans lequel le premier compresseur (32) est disposé sur un côté d'un intérieur du compartiment de machine (23), le second compresseur (42) est disposé sur l'autre côté de l'intérieur du compartiment de machine, et le condenseur à deux voies (101) et le ventilateur soufflant (24) sont disposés entre le premier compresseur et le second compresseur.

8. Le réfrigérateur selon la revendication 7, dans lequel le ventilateur soufflant (24) permet à de l'air de s'écouler de force à partir de l'un du premier compresseur (32) et du second compresseur (42) ayant une quantité relativement faible de la génération de chaleur vers l'autre du premier compresseur et du second compresseur.

FIG. 1

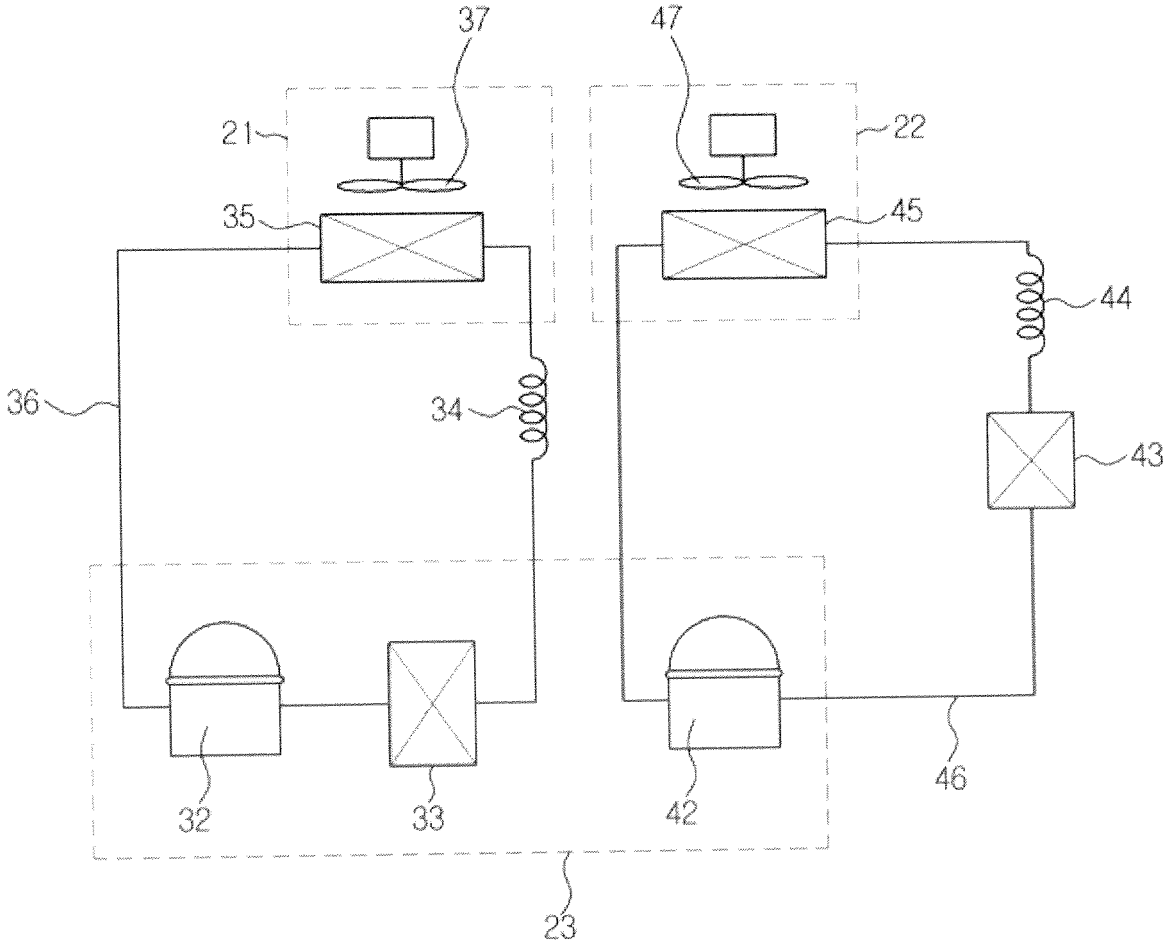

FIG.2

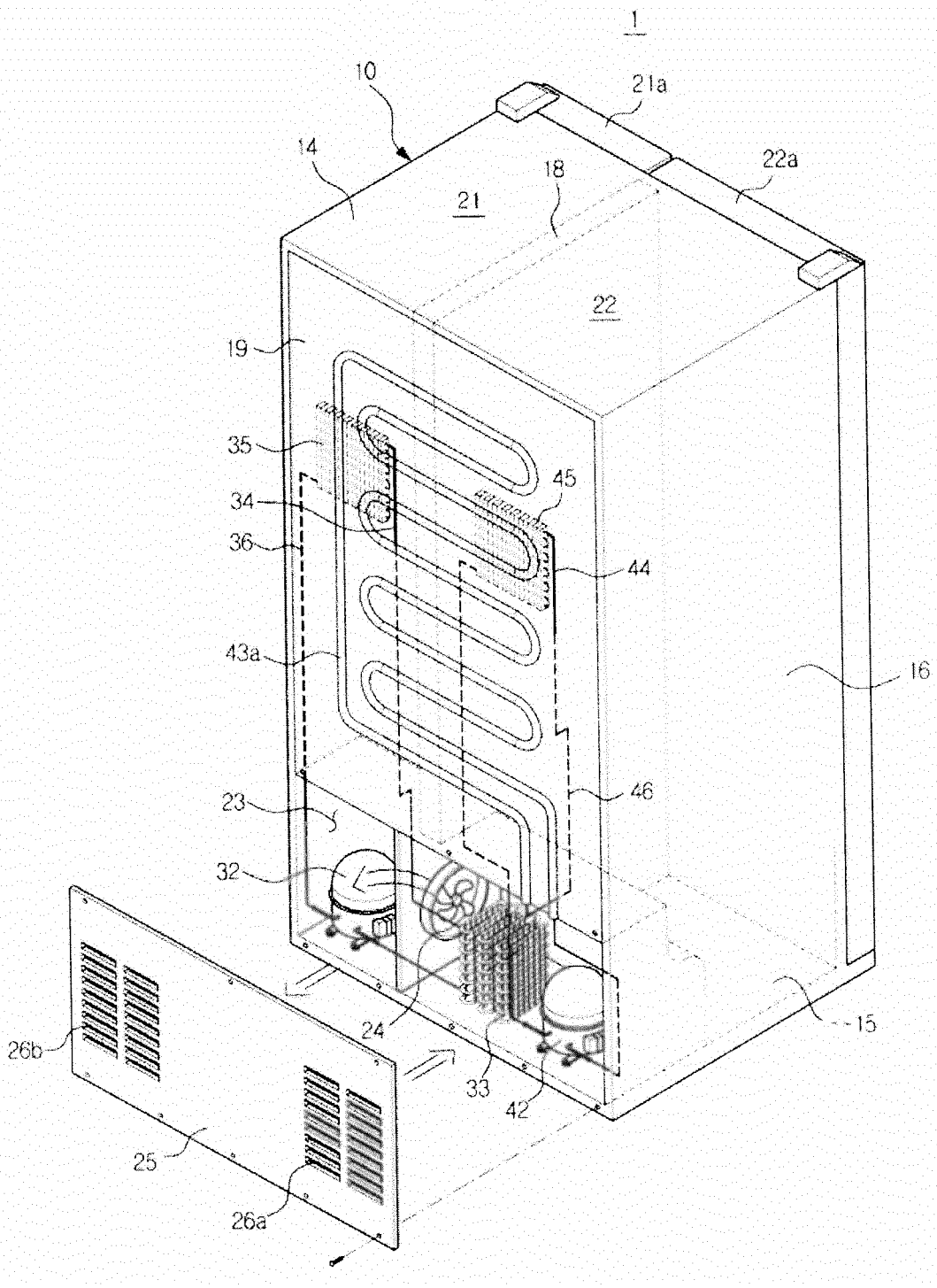
1
10
21a
14
18
22a
21
22
19
35
45
34
36
44
43a
16
46
23
32
24
15
26b
33
42
25
26a

FIG.3

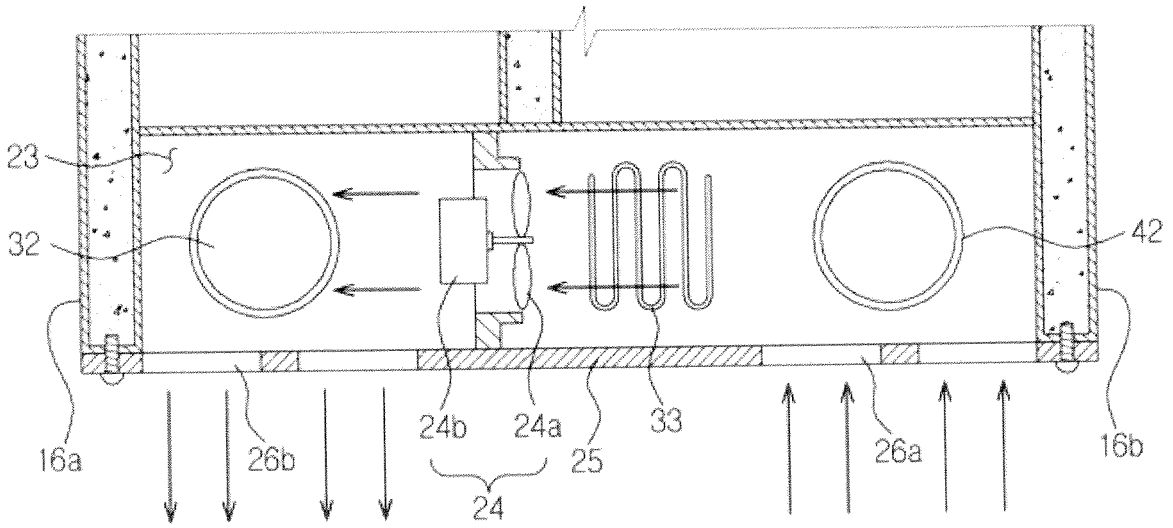

FIG.4

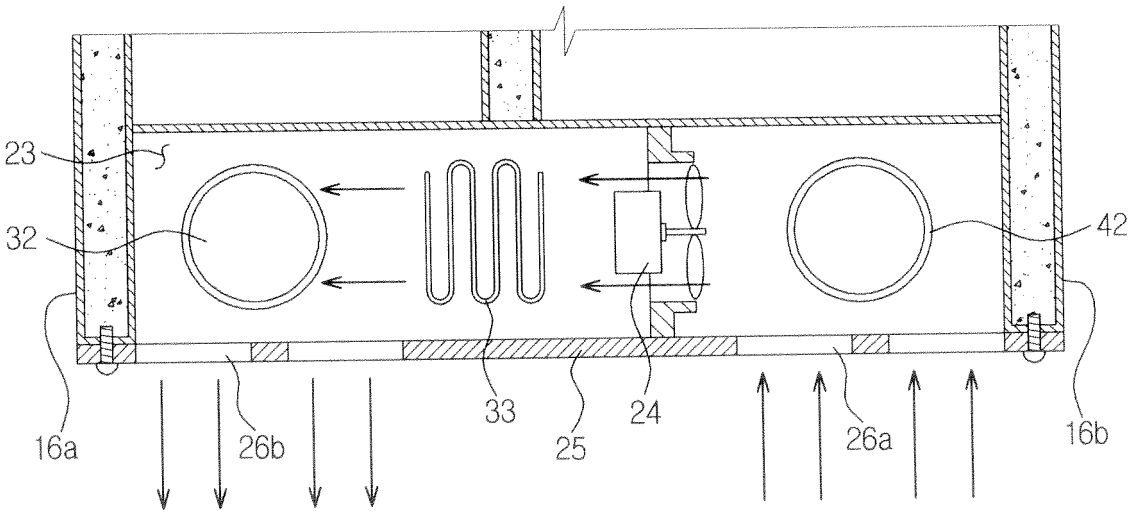

FIG.5

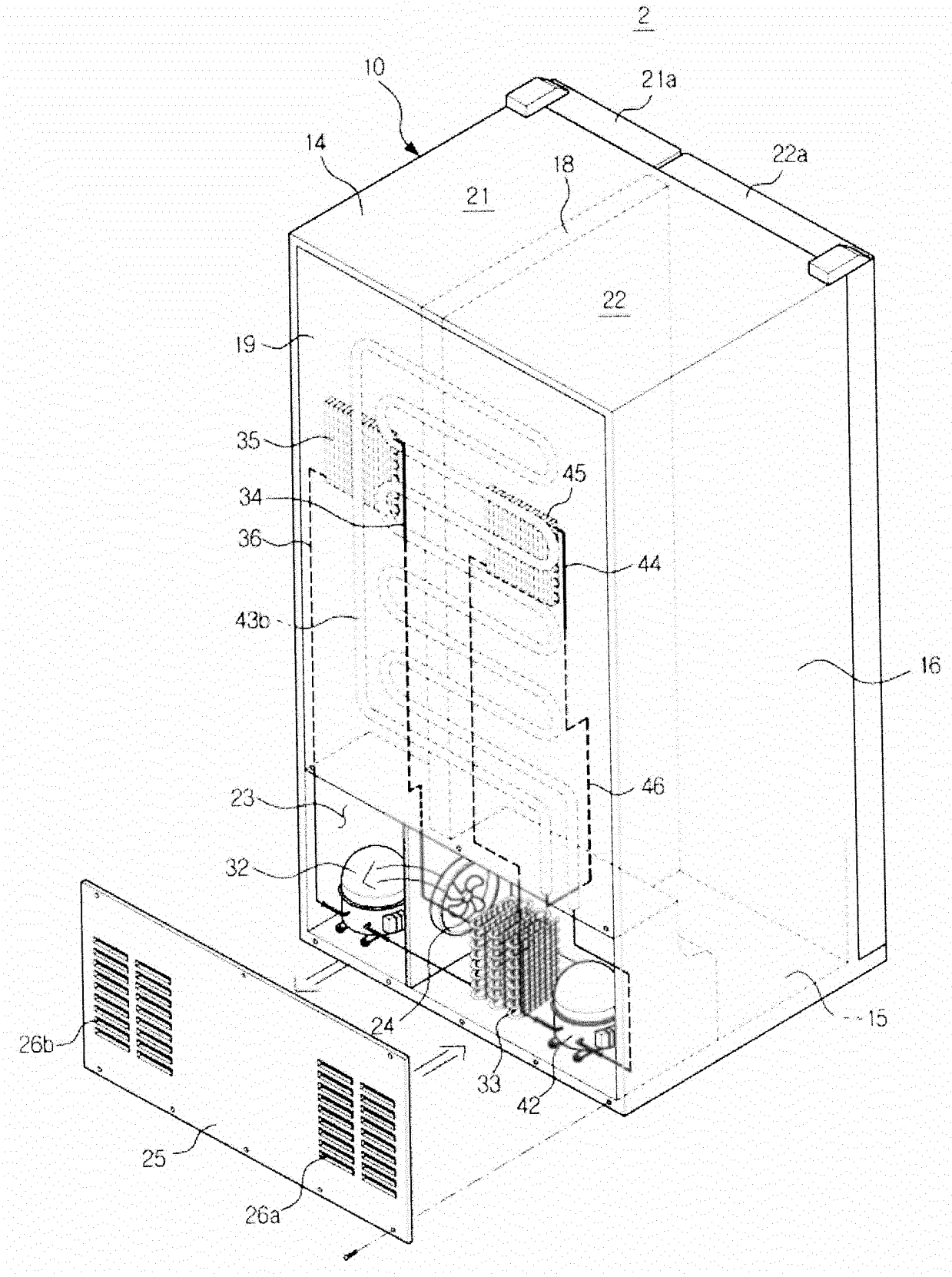
2
10
21a
14
18
22a
21
22
19
35
45
34
36
44
43b
16
46
23
32
24
15
26b
33
42
25
26a

FIG.6

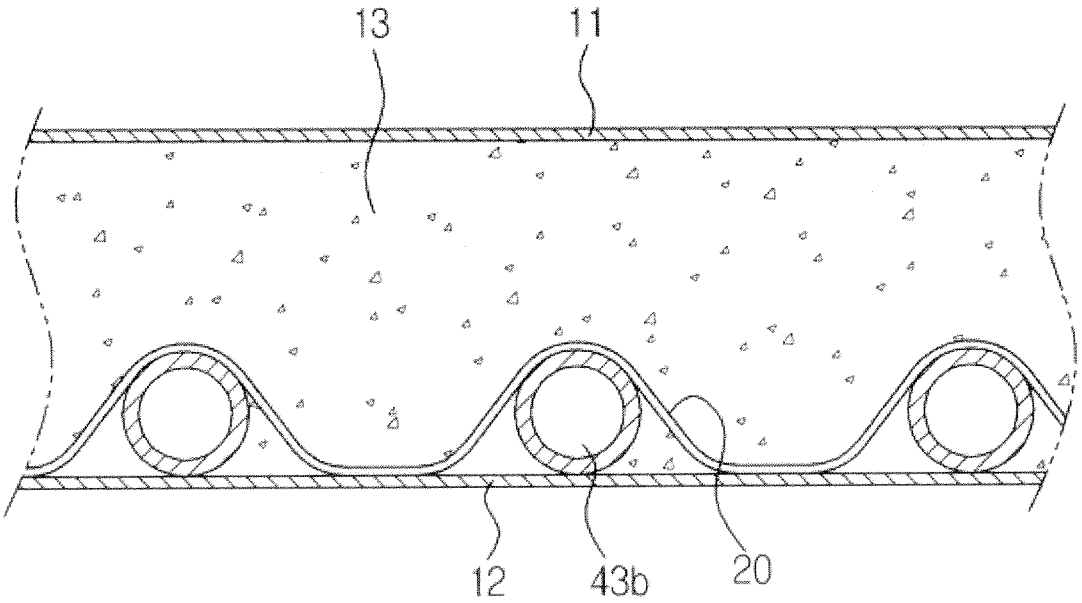

FIG.7

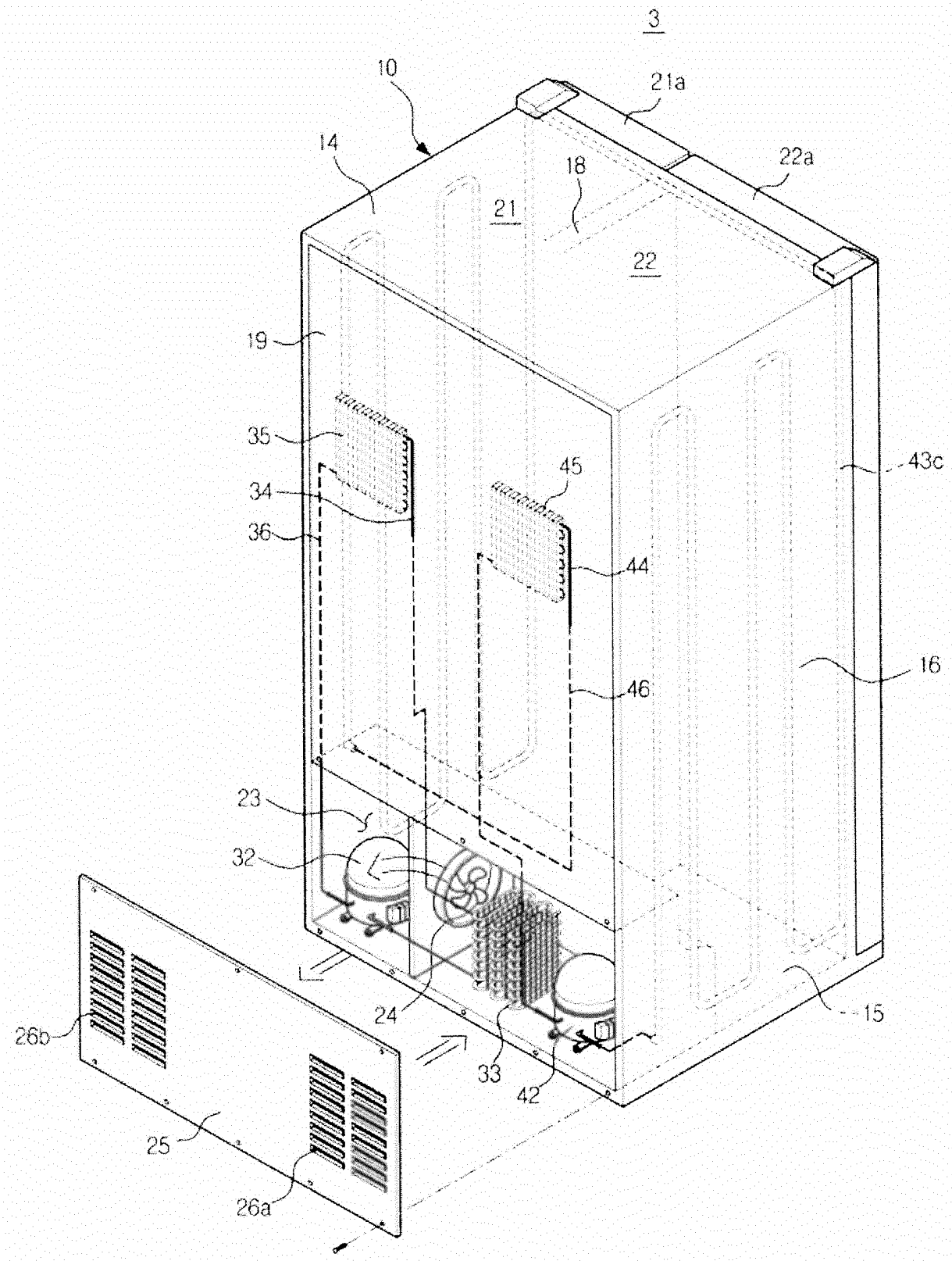
3
10
21a
14
18
22a
21
22
19
35
45
43c
34
36
44
16
46
23
32
24
15
26b
33
42
25
26a

FIG.8

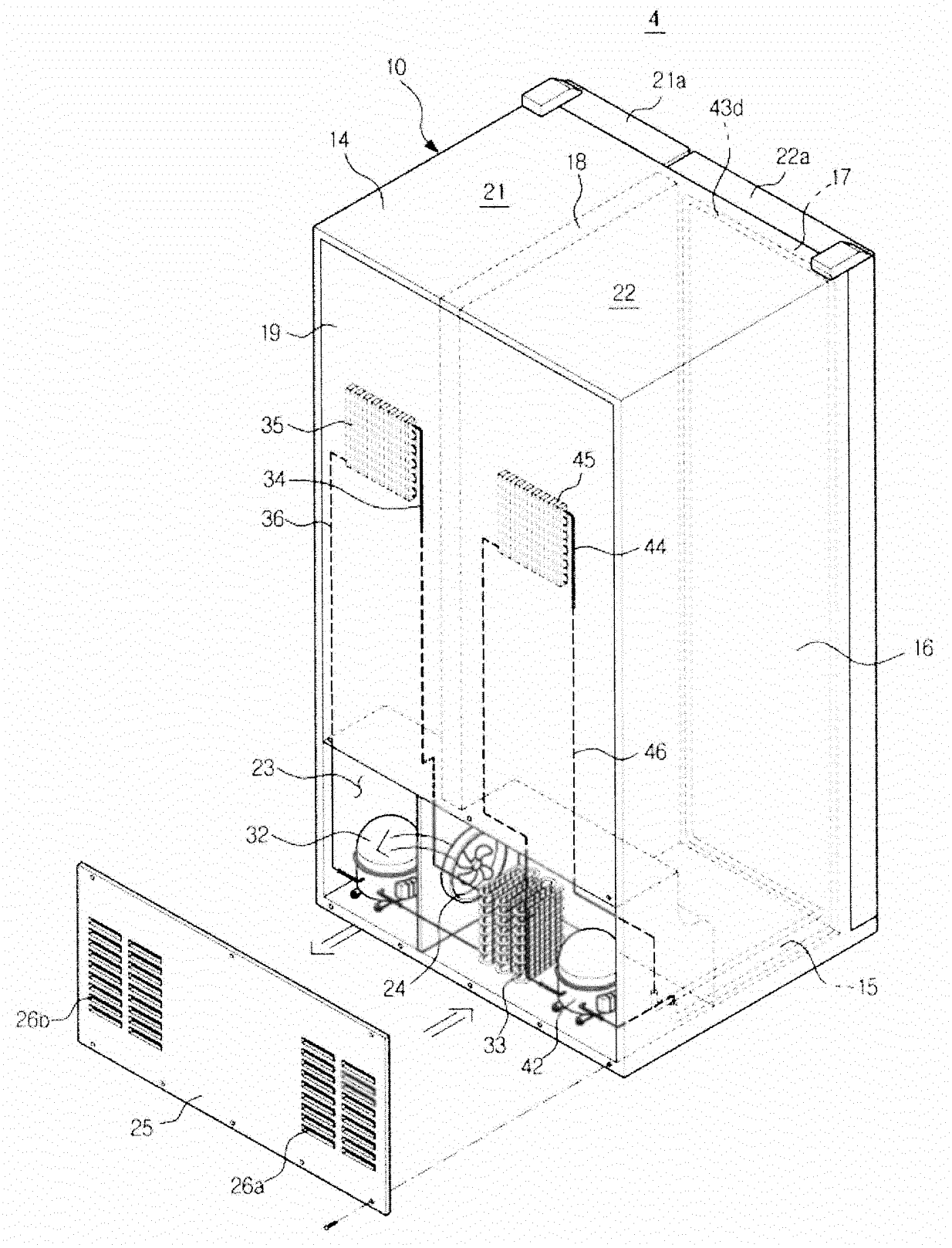
4
10
21a
43d
14
18
22a
17
21
22
19
35
45
34
36
44
16
46
23
32
24
15
26b
33
42
25
26a

FIG.9

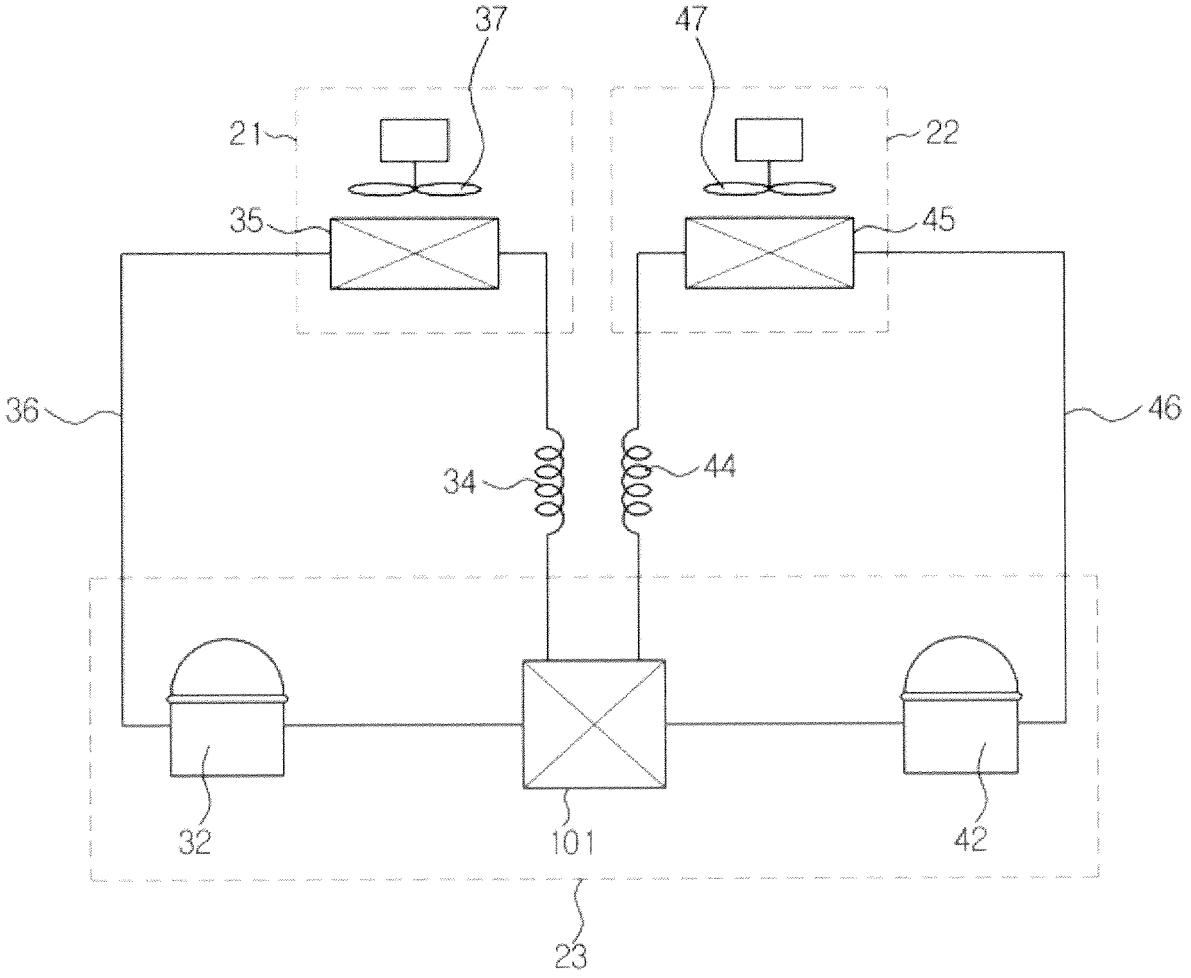

FIG.10

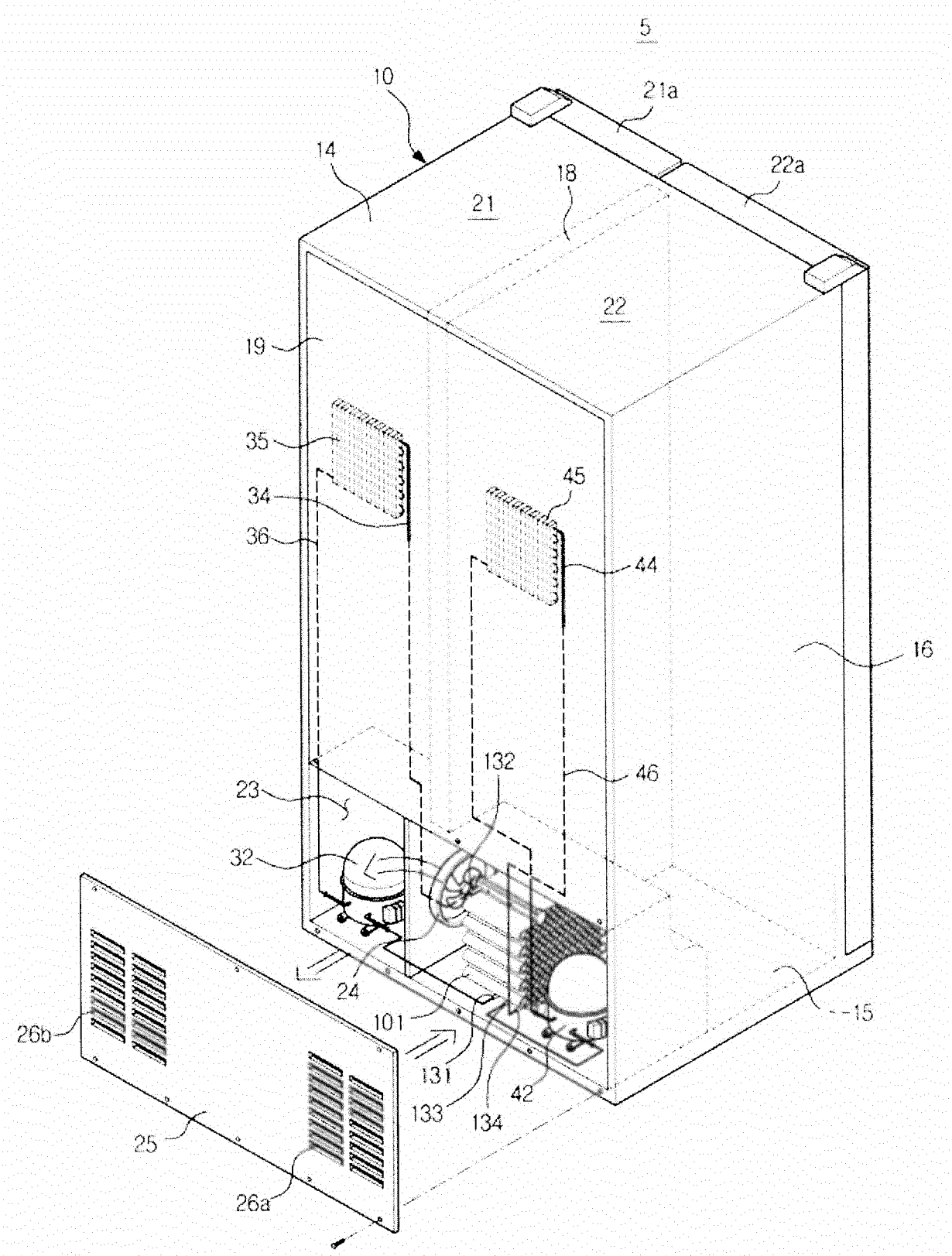
5
10
21a
14
18
22a
21
22
19
35
45
34
36
44
16
132
46
23
32
24
101
15
26b
131
42
133
134
25
26a

FIG.11

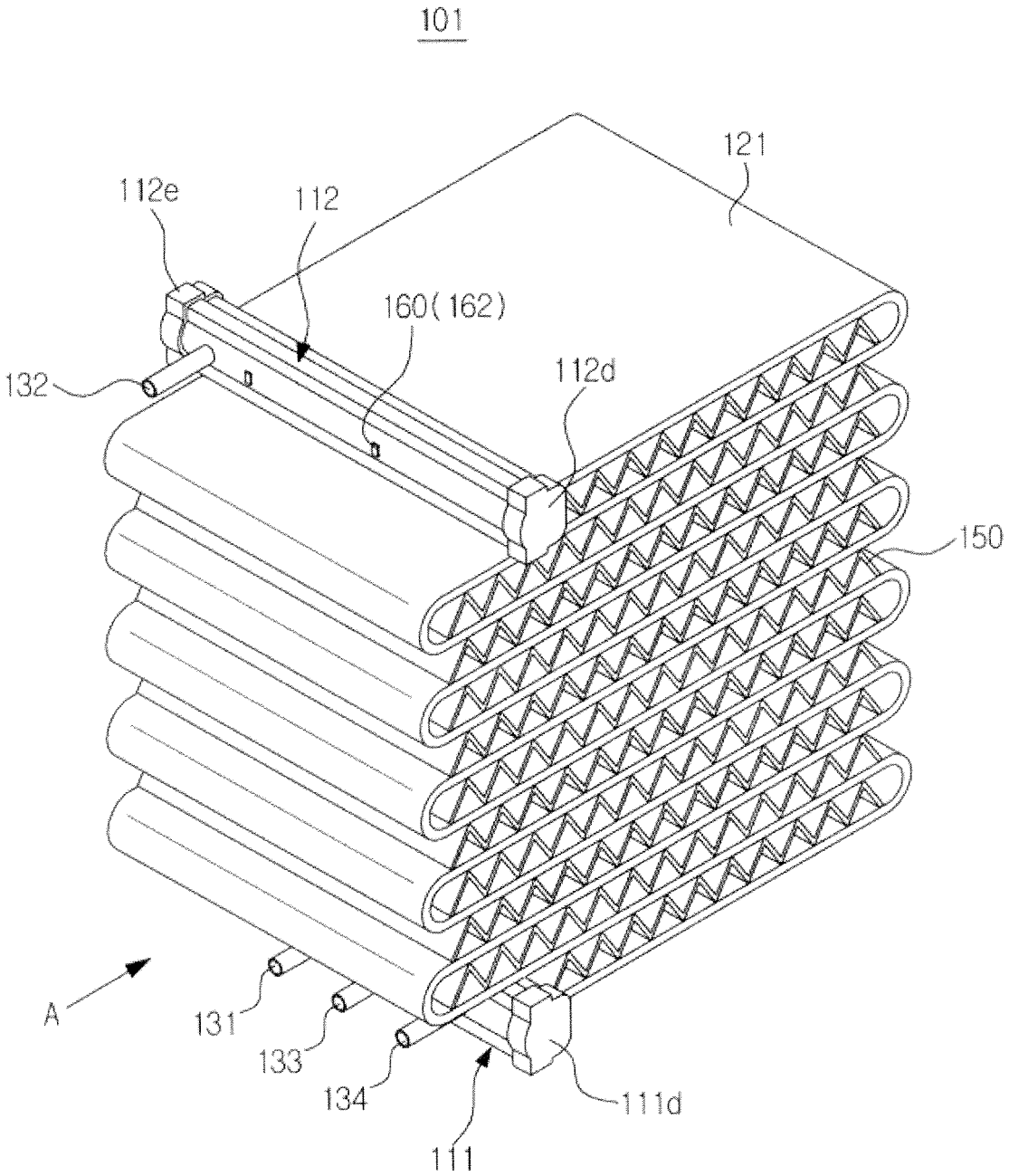

FIG.12

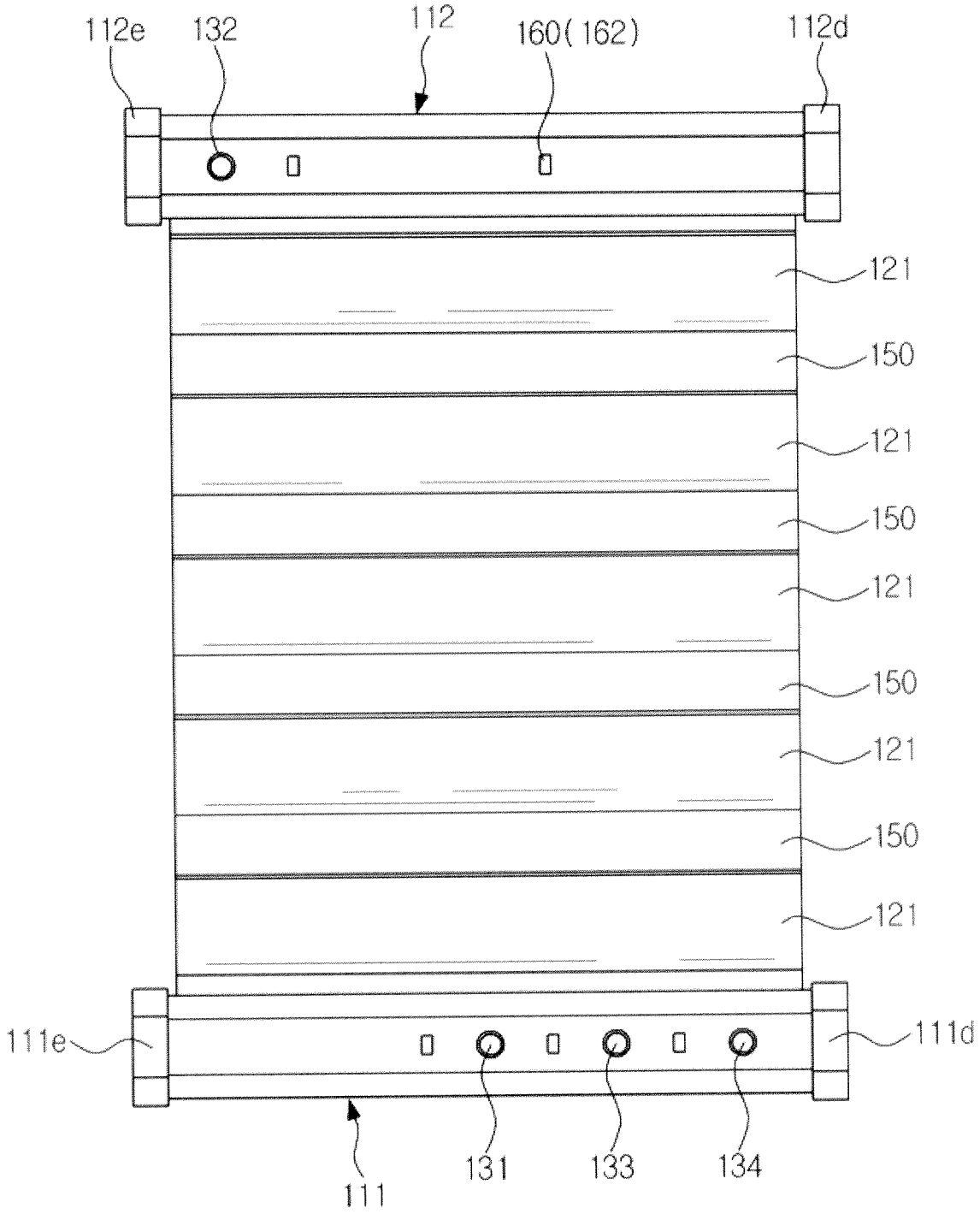
112e
132
112
160(162)
112d
121
150
121
150
121
150
121
150
121
111e
111d
111
131
133
134

FIG.13

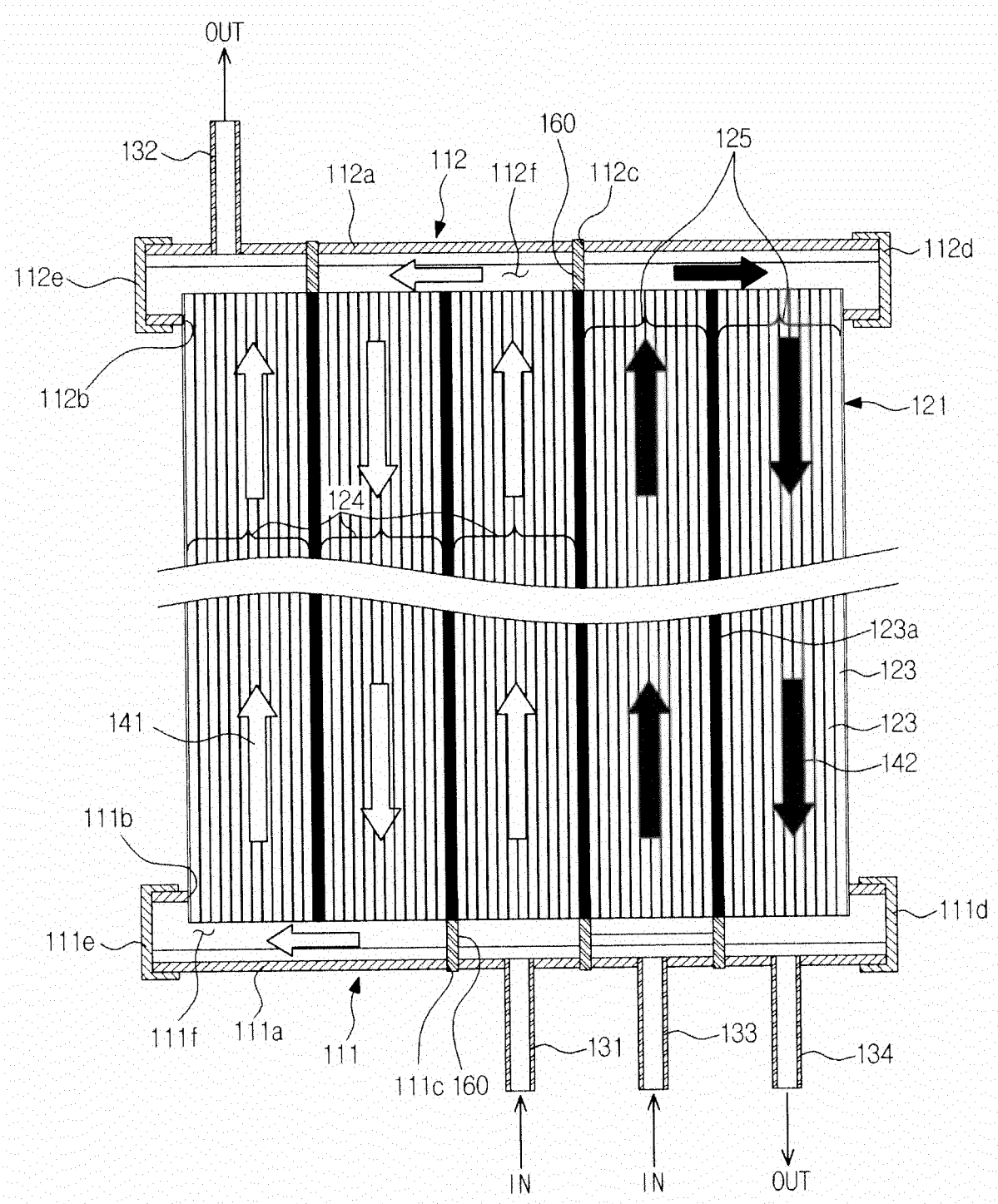
OUT
132
112a
112
112f
160
112c
125
112d
112e
112b
121
124
123a
123
141
123
142
111b
111d
111e
111f
111a
111
111c
160
131
133
134
IN
IN
OUT

FIG.14

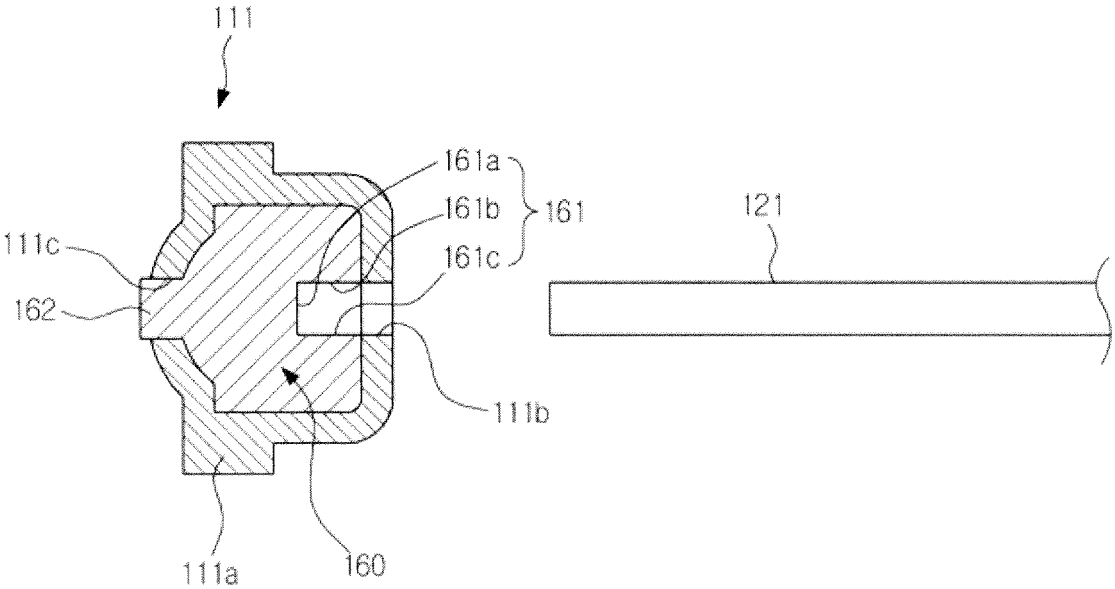

FIG.15

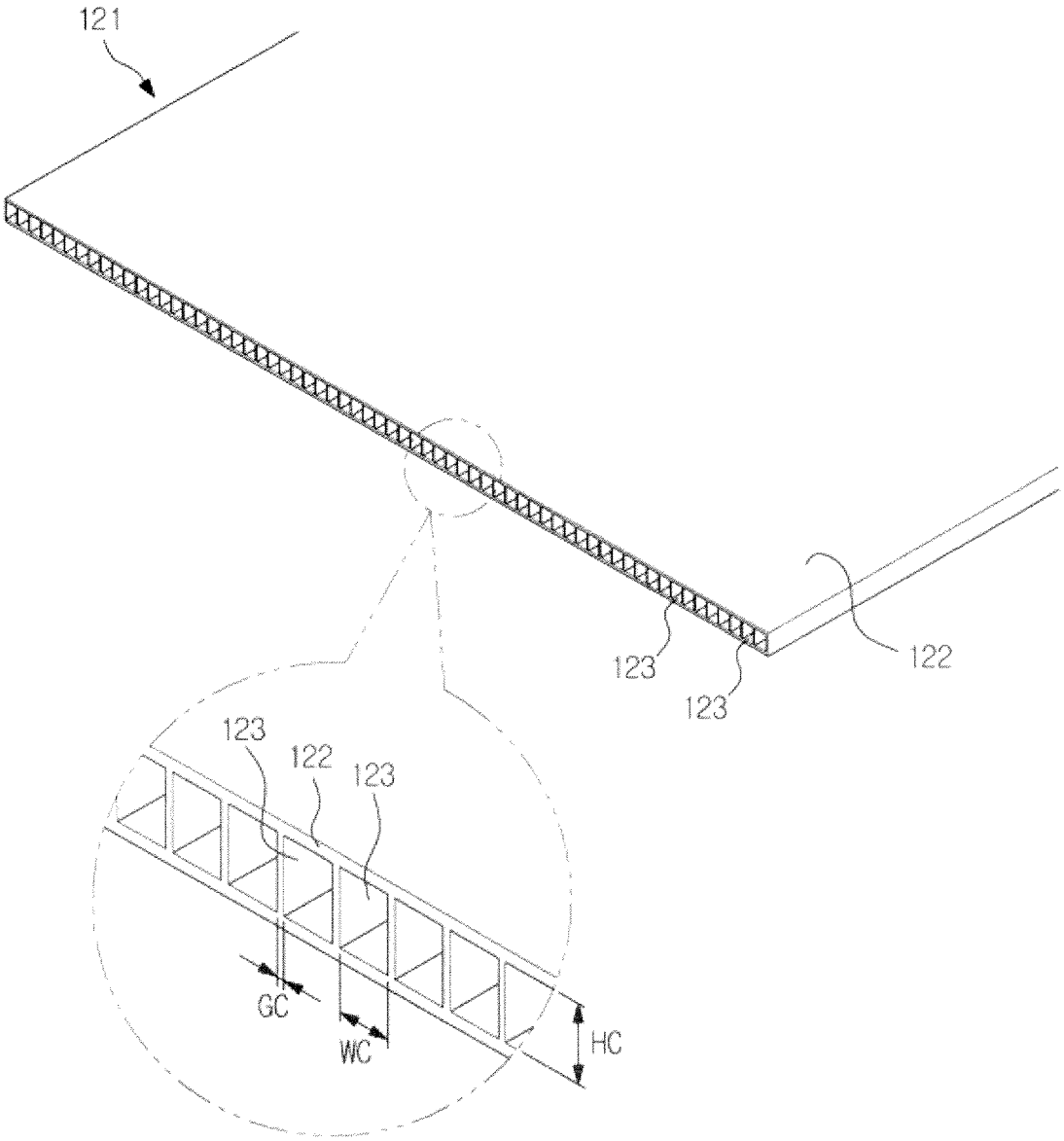

FIG.16

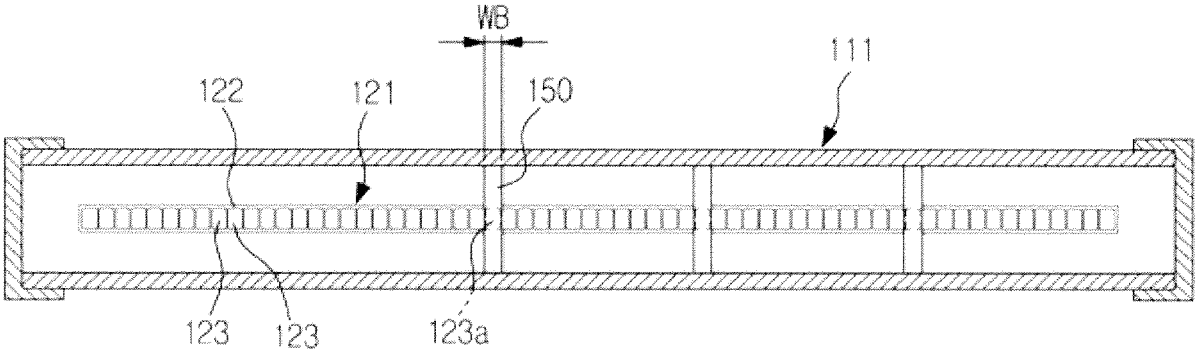

REFERENCES CITED IN THE DESCRIPTION

This list of references cited by the applicant is for the reader's convenience only. It does not form part of the European patent document. Even though great care has been taken in compiling the references, errors or omissions cannot be excluded and the EPO disclaims all liability in this regard.

Patent documents cited in the description

- US 5097897 A **[0004]**