(19) Europäisches Patentamt
European Patent Office
Office européen des brevets

(11) EP 2 777 828 A1

(12) EUROPEAN PATENT APPLICATION

(43) Date of publication:
17.09.2014 Bulletin 2014/38

(51) Int Cl.:
B07B 13/04 *(2006.01)* ***B28D 1/00*** *(2006.01)*

(21) Application number: **13159492.1**

(22) Date of filing: **15.03.2013**

(84) Designated Contracting States:
AL AT BE BG CH CY CZ DE DK EE ES FI FR GB GR HR HU IE IS IT LI LT LU LV MC MK MT NL NO PL PT RO RS SE SI SK SM TR
Designated Extension States:
BA ME

(71) Applicant: **Nielsen, Claus Juul**
5700 Svendborg (DK)

(72) Inventor: **Nielsen, Claus Juul**
5700 Svendborg (DK)

(74) Representative: **Pedersen, Tenna Marian et al**
Chas. Hude A/S
H.C. Andersens Bouldevard 33
1780 Copenhagen V (DK)

(54) Apparatus for sorting used bricks and a method

(57) Apparatus (1) for sorting used bricks (2). The apparatus (1) is adapted to remove mortar, debris and brick pieces from the used bricks, whereby cleaned bricks are provided. The apparatus comprises a transport unit (4) for transporting the used bricks 2 and at least one sorting unit (5) comprising sorting stations (6) for removing mortar and brick, and a cleaning unit (7) for removing the mortar adhering to the sorted used bricks (2). The transport unit (4) comprises a number of separated parallel tracks (9) adapted to transport the bricks 2 axis-parallel to the transport direction of the tracks (9), and in the tracks (9) at least one sorting station (6) is placed. The sorting station (6) is adapted to lead the used bricks (2) measuring at least a length X from one end to the other end of the brick (2), said length being parallel with the longitudinal axis of the bricks, said bricks passing the sorting unit (5).

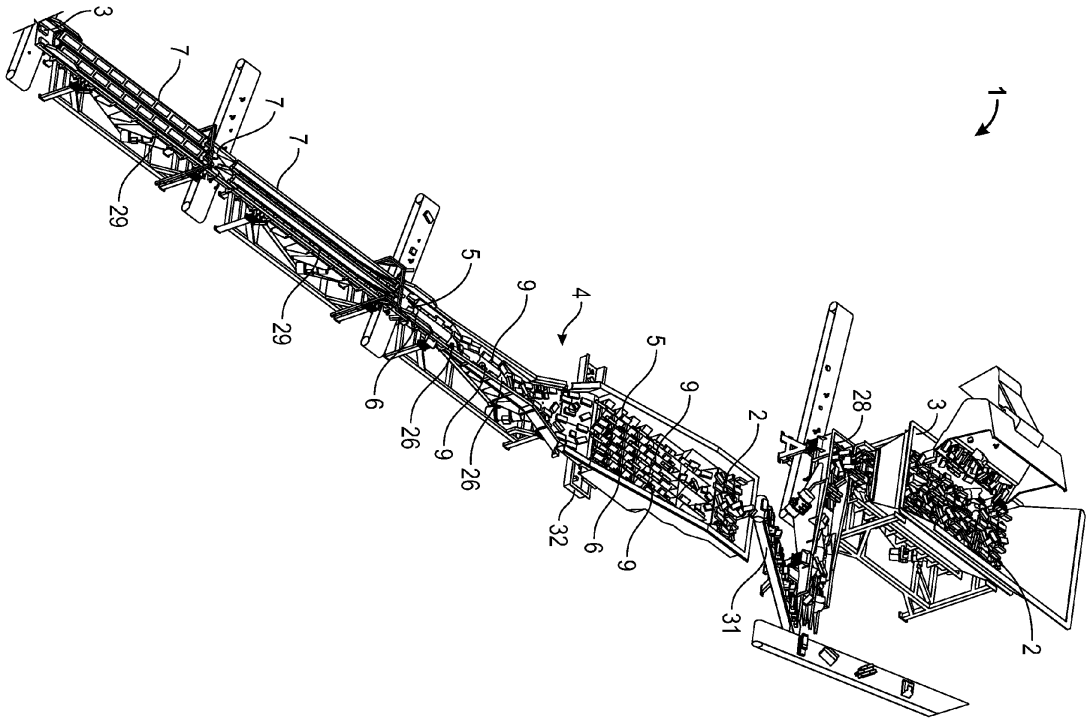

FIG. 1

EP 2 777 828 A1

Description

[0001] The invention relates to an apparatus for sorting used bricks and a method for carrying out such sorting, said used bricks comprising a first end and an oppositely placed second end, an upper surface and an oppositely placed lower surface, and two oppositely placed side surfaces, a first and a second side surface, said apparatus being adapted to remove mortar, debris and brick pieces from the used bricks, whereby cleaned bricks are provided, said apparatus comprising a transport unit for transporting the used bricks, and at least one sorting unit comprising sorting stations for removing mortar and brick pieces from the used bricks, said apparatus further comprising a cleaning unit for removing mortar adhering to the sorted used bricks.

[0002] US3080860 discloses a brick-cleaning machine. It comprises a screen plate comprising a rectangular mesh screen plate and a series of openings of different sizes. Some of the openings are of sufficient size to accommodate undersized bricks passing over the openings to fall through the openings. Other openings are of sufficient size to let a full-size brick drop through it into a hopper placed beneath the openings. However, the system has the drawbacks that a significant part of the bricks or mortar is not removed and that bricks of the right size do not all fall through the openings. This is due to the construction of the screen plate and the fact that the bricks are led to the screen plate in an unguided manner. Therefore, the position of the bricks is random and in bulk, and the construction causes a lot of bricks to be sorted incorrectly.

[0003] Further, the construction does not provide sufficient removal of mortar from the used bricks.

[0004] Therefore, it is an object of the present invention to provide an apparatus and method overcoming at least some of the disadvantages of the prior art or at least providing a useful alternative.

[0005] According to a first aspect of the invention, an apparatus as described in the introduction is provided, where said transport unit comprises a number of separated parallel tracks adapted to transport the bricks in the transport direction of the tracks towards the cleaning unit, and where at least one sorting station is placed in the tracks, said sorting station being adapted to lead the used bricks measuring at least a length X from one end to the other end of the brick, said length being parallel with the longitudinal axis of the bricks, said bricks passing the sorting unit.

[0006] All the used bricks are directed to the tracks. The tracks are constructed in such a way that the used bricks are placed in line in each track. The bricks are positioned with their longitudinal dimension oriented substantially parallel to the forward direction of movement of the bricks along the tracks. In this way, only one brick in each track passes the sorting unit, whereby the number of bricks of the wrong size passing the sorting unit is reduced. The sorting unit is constructed as an opening in the tracks with a certain size. A connecting profile is provided in the opening ensuring that bricks having a size of the same length as the opening or larger pass over the opening and proceed in the track at the other side of the opening. Several sorting stations may be provided in the tracks, and the openings may have different sizes in order to improve the sorting. The profile is attached to or near the bottom of the tracks at each side of the opening. Advantageously, the profile is a V-shaped profile, the angle being equivalent to the angle of the tracks. However, the connecting profile may have other designs such as several axis-parallelly rounded profiles, and there may be more connecting profiles.

[0007] At the end of the transport unit, which may be constructed as a conveyor belt, the bricks sorted out for cleaning arrive at the cleaning unit. The transport unit may also be constructed as a plane conveyor belt with guiding means positioned at the sides for guiding the bricks.

[0008] The cleaning unit comprises two cleaning stations, and a positioning means is placed between the stations. The positioning means ensures that bricks are positioned in such a way that the side surface not cleaned in the first cleaning station is cleaned in the second station. The top and lower surfaces of the bricks are cleaned in both cleaning stations.

[0009] According to another embodiment of the invention, the tracks are constructed as V-shaped tracks comprising a first side and a second side, said sides pointing towards each other, and where the connection between the two sides comprises a bottom of the V-shaped track, the angle between the sides being be-tween 70-110 degrees. Thereby, each used brick is transported with a longitudinal edge at the bottom of the track. This is a simple way of ensuring that the bricks are transported in line. Preferably, the angle is around 90 degrees.

[0010] In a further embodiment of the invention, the sorting station comprises at least one opening in each of the tracks, said opening comprising a first free end of each of the tracks and a second free end of each of the tracks, the opening being provided be-tween said free ends, said sorting station further comprising at least one connecting profile provided between said free ends.

[0011] By this construction, it is achieved that the used bricks having a length smaller than the distance between the free ends fall down in the opening and are removed. The used bricks having a length equivalent to or longer than the distance of the free ends are transported further. The bricks having such dimension do not fall down through the opening as one end of the bricks is supported by the track itself, and the opposite end is supported by the connecting profile.

[0012] In a further embodiment of the invention, the length of the opening measured between the two free ends is equivalent to or smaller than the length X of the used bricks.

[0013] In a further embodiment of the invention, the apparatus comprises several sorting units, each sorting

unit comprising several openings placed in each of the tracks, each opening having a length dimension equivalent to or smaller than the length X of the used bricks.

[0014] Thereby, it is secured that mortar and brick pieces as well as bricks not having the wanted size are removed.

[0015] In a further embodiment of the invention, the length of the opening is adjustable.

[0016] Thereby, it is possible to use the same apparatus even when different sizes are wanted as the distance between the free ends is shortened or extended as needed.

[0017] In a further embodiment of the invention, the connection profile comprises a V-shaped profile.

[0018] Thereby, the risk of bricks with the right size falling down into the opening and being discarded is reduced. The bottom of the V-profile is placed at the same level as the bottom of the V-formed tracks.

[0019] In a further embodiment of the invention, each sorting unit comprises several sorting stations, and the number of tracks of the transport unit leading the bricks from a first sorting unit to a second unit is reduced from a number A to a number B, and where the final sorting unit is adapted to discard bricks positioned incorrectly in the tracks.

[0020] At the beginning, the number of tracks (A) is around 6-12. However, this number is reduced, advantageously to two tracks (B).

[0021] In the final sorting unit, the length between the two free ends is between the length of the used bricks and 60-70% of the length of the used bricks. Thereby, the bricks smaller than 2/3 of a brick are removed from the apparatus. Further, one side of each V-shaped track has an opening larger than X, whereby bricks positioned incorrectly in the track are removed.

[0022] In a further embodiment of the invention, the apparatus comprises positioning means adapted to position the used bricks in a well-defined position, said positioning means being adapted to position the used bricks in such a way that the first side surfaces of the bricks are facing the first or second side of the transport unit.

[0023] Thereby, the bricks are positioned in the same way in the tracks.

[0024] In a further embodiment of the invention, the apparatus comprises positioning means between the cleaning unit and the sorting units, said positioning means being adapted to position the used bricks in such a way that the first side surfaces of the bricks are facing the first or second side of the transport unit and that the final sorting unit comprises openings in each tracks provided by gaps, said openings being provided by a first gap of a length l1 in one side of the tracks and a second gap of a length l2 in the other side of the tracks, one of the lengths being larger than X and the other length being smaller than X .

[0025] Thereby, the risk of too small bricks passing the sorting unit without being removed is significantly reduced. Further, bricks positioned incorrectly in the tracks are also discarded through the longest/largest gap of the tracks.

[0026] In a further embodiment of the invention, the positioning means has a triangular profile and an angle being smaller than 90 degrees of said profile and pointing towards the transport direction of the used bricks.

[0027] Thereby, the bricks are properly oriented as the bricks are pushed towards the sides of the V-shaped tracks.

[0028] The positioning means is constructed as a triangular profile, and the apex of the profile is pointing towards the transport direction of the bricks and placed between the two tracks. The two sides of the triangular profile making the apex are also angled in a direction upwards forming two inclined surfaces.

[0029] In a further embodiment of the invention, the cleaning unit comprises a first cleaning station and a second cleaning station, a positioning means being placed between said stations, whereby a side surface of the bricks abutting the first side of the transport unit in the first cleaning station is pivoted/oriented by said positioning means in such a way that the side surface abuts the second side of the transport unit in said second cleaning station.

[0030] Thereby, all four sides of the used bricks are cleaned in said cleaning stations by the vibration. The cleaning stations are equivalent to the cleaning stations described in DK176427. The two ends in each of the bricks abutting neighbouring bricks are cleaned due to the friction between the bricks. The bricks pass in line.

[0031] In a further embodiment of the invention, the cleaning unit comprises a frame comprising a built-in wire net, said cleaning unit being connected to a vibrator, whereby the net vibrates by said vibration and the mortar is removed from the surfaces of the used bricks abutting said nets.

[0032] In a further embodiment, the final sorting unit comprises two sorting stations, each sorting station comprising an opening provided by a first gap in the first side and a second gap provided in the second side, said one of the gaps having a length larger than the other and larger than the length X.

[0033] Thereby, used bricks having the right size but placed incorrectly in the tracks, e.g. at the wrong side of the tracks, are discarded through the opening provided by the gap. In this way, it is achieved that all the bricks arriving at the cleaning unit are placed in the same way in the tracks, and the same surfaces of the bricks are treated in the cleaning process.

[0034] In a further embodiment, the invention also comprises a process for removing debris, brick pieces and mortar from used bricks in an apparatus, said used bricks comprising a first end and an oppositely placed second end, a top upper surface and an oppositely placed lower surface, two oppositely placed side surfaces, and a first and a second side surface, said apparatus being adapted to remove mortar, debris and brick pieces, whereby cleaned bricks are provided, said apparatus

comprising a transport unit for transporting the used bricks and at least one sorting unit comprising sorting stations for removing mortar and brick pieces from the used bricks, said apparatus further comprising a cleaning unit for removing mortar adhering to the sorted used bricks, characterised in that the used bricks are directed to the sorting unit in parallel lines positioning the bricks with their longitudinal dimension oriented substantially parallel to the forward direction of movement of the bricks, where bricks having a length smaller than X are removed from the used bricks in said sorting unit, and where the used and sorted bricks are transported to the cleaning station, the mortar being removed from the bricks in said station providing clean bricks, said mortar being removed by action of the cleaning station at the upper surface, lower surface and the side surfaces.

[0035] The invention also comprises the use of the apparatus for the process as claimed.

[0036] The apparatus is a moveable machine that can be transported to areas, where the need for cleaning used bricks is present.

[0037] The invention is explained in detail below with reference to the drawings in which

Fig. 1 shows a perspective view of the apparatus according to the invention,

Fig. 2a shows a sorting unit according to the invention comprising a number of sorting stations,

Fig. 2b shows a sectional view of the sorting unit in Fig. 2a,

Figs. 3 and 4 show a detailed drawing of the positioning means,

Fig. 5 shows a detailed drawing of the final sorting unit,

Fig. 6 shows a detailed drawing of a cleaning unit.

[0038] Fig. 1 shows a perspective view of an apparatus 1, said apparatus 1 being connected to a conveyer belt 31 transporting used bricks 2 to the apparatus 1 from a hopper 30. A pre-sorting unit 28 is placed between the hopper 30 and the conveyer belt 31, said pre-sorting unit 28 removing large items of mortar which is a well-known technology. The used bricks 2 have varying quantities of mortar adhering to their plane surfaces, which makes the bricks non-uniform in shape and size. Thereby, at least a certain quantity of the old mortar is desirably removed from the opposite plane surfaces of the bricks before the bricks are re-used.

[0039] The used bricks 2 are received and distributed to a transport unit 4. The transport unit 4 transports the used bricks 2 from the first end of the apparatus 1 to the other end of the apparatus 1, where the used bricks 2 leave the apparatus 1 as clean bricks 3, i.e. the adhering mortar has been removed from the surfaces of the bricks 2. At the start of the transport unit 4, the used bricks 2 are distributed into 6-8 axis-parallel tracks 9. The tracks 9 are V-shaped. The bricks 2 are moved in line in each track to a sorting unit 5 comprising sorting stations 6 placed in each track 9. The sorting station 6 is configured as an opening in each track 9. The openings in each track 9 may be separated from the neighbouring track or all the openings may be connected to each other thus providing one single opening across the transport unit 4. In the sorting unit 5, used brick pieces being 50 % of the length of the whole brick or smaller are removed and fall down into a tray 32 placed below the sorting unit 5. The bricks 2 being larger than 50 % of the length of the whole brick are moved forward and directed by positioning means 26 from the several tracks 9 (6-12 tracks) into two parallel tracks 9. Thereby, the bricks are aligned into two straight lines and moved forward to a second positioning means 26 designed in the same way as the former positioning means 26. The positioning means 26 ensures that the bricks 2 are placed in the tracks 9 with the same side of the bricks 2 abutting the same side of a track.

[0040] Then, the bricks are moved to another sorting unit 5 (the final sorting unit) comprising two sorting stations 6, each sorting station 6 being placed in a track 9. The used bricks 2 being 2/3 of the length of an intact brick (length X) are discarded together with mortar and aggregate. Bricks having the right size but placed incorrectly in the tracks are also discarded through the openings. This is due to one side in each track having an opening/gap being larger than X. The discarded parts fall through the opening and down into a tray or similar. Then, the bricks with the same size (length X) are transported to a cleaning unit 7 comprising two cleaning stations 29, said stations being placed in line. In the first cleaning station 29, three sides of the bricks are vibrated and cleaned by the cleaning station.

[0041] The bricks 2 are rectangular units comprising an upper surface 18, an oppositely placed lower surface 17, a first side surface 19 and an oppositely placed second side surface 20, a first end 15 and an oppositely placed second end 16. Varying quantities of mortar adhere to the surfaces.

[0042] The surfaces cleaned in the first cleaning station are the upper surface 18, the lower surface 17 and one side surface of the bricks. The two ends 15, 16 of a brick are cleaned due to the friction between the ends of two abutting bricks. The now semi-cleaned bricks are transported to the second cleaning station 29. A positioning means 26 is placed between the first and second cleaning stations 29. This positioning means 26 gives rise to the bricks 2 being positioned in such a way that the side surface not cleaned in the first cleaning station now abuts the cleaning means in said station and is cleaned. Further, the lower 17 and upper 18 surfaces are cleaned again. Then, the bricks are removed from the apparatus as clean bricks 3.

[0043] Fig. 2a and Fig. 2b show a detailed view of the

transport unit 4 transporting the bricks 2 and the sorting unit 5. The bricks 2 are transported in the V-shaped and parallel-oriented tracks 10, one of the longitudinal edges of the bricks facing the angle of the V. The tracks 10 comprise a first side 11 and a second side 12 connected to each other and making a bottom 13. The angle between the tracks is between 70-100 degrees, preferably 90-110 degrees. Advantegously, the angle is around 90 degrees. The bricks 2 are guided towards the sorting unit 5. The sorting unit 5 comprises several sorting stations 6 designed as openings in each track 10. In this embodiment, the openings are connected to each other, whereby one single large opening is achieved in the tracks, said longitudinal axis of this opening placed perpendicular to the transport direction of the bricks. However, the openings may also be separated openings. The openings in each track 10 is limited by a first free end 22 and placed in the part of the track from where the brick is directed and a second free end 13 delimiting the part of the track to where the bricks are directed. A connecting profile 24 is provided between the two free ends 22, 23. The connecting profile 24 may be constructed in various ways as two or more parallel, cylindrical profiles are connected at the underside of the first side 11 and the second side 12 close to the angle. The connecting profile may also be an angular-shaped profile also connected to the underside of the first side 11 and the second side 12. In this context, the angle is substantially the same as the angle between the two sides of the track. In the first sorting unit, the distance between the two free ends 22, 23 is around 50 % of the length of the bricks X. Said X is the length of the bricks being the output of cleaned bricks. The distance between the two free ends may be adjusted. Bricks having a length larger than 50 % of the opening will be transported further, and the bricks having a smaller length will fall down in the opening and be removed from the process. The bricks having a size of 50 % or more of the opening are then safely directed to the sorting station 6. When a brick 2 arrives at the sorting station 6, the end of the brick placed outside the supporting track 10 will be supported by the connecting profile 24. Due to the brick being 50 % or more of the length of the opening, this end of the brick will be caught by the connecting profile 24 and guided to the other side, where the second end of the track is placed. The end of the brick is caught before the opposite end of the brick leaves the track part delimited by the first free end 22.

[0044] Figs. 3 and 4 show a detailed drawing of a positioning means 26. The brick 2 having passed the first sorting unit 5 will flow further down in the 6-8 parallel tracks 10. When they meet a positioning means 26, they will be directed into two parallel V-shaped tracks 9. In the two tracks 9, the two bricks 2 are positioned in such a way that the upper surface 18 or lower surface abuts the first side 11 or the second side 12 of the tracks. The positioning means 26 is constructed as a triangular profile, and the apex of the profile 26 is pointing towards the transport direction of the bricks 2 and placed between the two tracks 10. The two sides of the triangular profile making the apex are also angled in an upwards direction making two inclined surfaces 36. After the bricks 2 have passed the positioning means 26 dividing the bricks into the two tracks, they are in another station also comprising positioning means 26. Said station being constructed as explained above is oriented by said positioning means 26 in such a way that the bricks having a length of X are nearly all abutting the same side surface in each track 10.

[0045] Fig. 5 shows another sorting unit 5 placed after the first sorting unit 5 and where the sorting stations 6 have such dimensions that bricks being 2/3 of the length X or smaller are discarded. Bricks 2 placed incorrectly in the tracks are also discarded. The opening in the V-shaped tracks is designed so that one side of each track has an opening/a gap larger than the length X of the bricks, whereby bricks positioned incorrectly are removed. The openings are provided by a first gap 21 of a length l1 at one side of the tracks and a second gap 25 of a length l2 at the other side of the tracks and one of the lengths being larger than X and the other length being smaller than X.

[0046] The bricks 2 passing the last sorting unit 5 will arrive at the cleaning unit 7. The cleaning unit 7 comprises two cleaning stations 29. The two cleaning stations are constructed in the same way. The cleaning of the bricks takes place with a device comprising a frame 34 comprising a built-in wire net, said frame 34 being connected to a vibrator 35. The net vibrates by the movements formed by the vibrator 35, and the mortar is removed from the surfaces of the used bricks abutting the nets.

[0047] Danish patent DK176427 describes the cleaning station in detail.

[0048] Fig. 6 shows a cleaning station 29 comprising a frame with wire net. The vibrator 35 ensures that the frame vibrates, and when it touches the free surfaces of the bricks, these are cleaned.

List of references

1.	Apparatus
2.	Used bricks
3.	Clean bricks
4.	Transport unit
5.	Sorting unit
6.	Sorting station
7.	Cleaning unit
8.	
9.	Parallel tracks
10.	V-shaped tracks
11.	First side
12.	Second side
13.	Bottom
14.	
15.	First end
16.	Second end

(continued)

17.	Lower surface
18.	Upper surface
19.	First side surface
20.	Second side surface
21.	First gap
22.	First free end
23.	Second free end
24.	Connecting profile
25.	Second gap
26.	Positioning means
27.	Receiving unit
28.	Pre-sorting unit
29.	Cleaning station
30.	Hopper
31.	Conveyor belt
32.	Tray
33.	
34.	Frame with wire net
35	Vibrator
36	Inclined surfaces

Claims

1. An apparatus (1) for sorting used bricks (2), said used bricks (2) comprising a first end (15) and an oppositely placed second end (16), an upper surface (18) and an oppositely placed lower surface (17), and two oppositely placed side surfaces, a first (19) and a second (20) side surface, said apparatus (1) being adapted to remove mortar, debris and brick pieces from the used bricks, whereby cleaned bricks (3) are provided, said apparatus (1) comprising a transport unit (4) for transporting the used bricks (2), and at least one sorting unit (5) comprising sorting stations (6) for removing mortar and brick pieces from the used bricks (2), said apparatus (1) further comprising a cleaning unit (7) for removing mortar adhering to the sorted used bricks (2), **characterised in that** the transport unit (4) comprises a number of separated parallel tracks (9) adapted to transport the bricks (2) in the transport direction of the tracks (9) towards the cleaning unit (7), and at least one sorting station (6) is placed in the tracks (9), said sorting station (6) being adapted to lead the used bricks (2) measuring at least a length X from one end to the other end of the brick (2), said length being parallel with the longitudinal axis of the bricks, said bricks passing the sorting unit (5).

2. An apparatus (1) according to claim 1, **characterised in that** the tracks (9) are constructed as V-shaped tracks (9) comprising a first side (11) and a second side (12), said sides pointing towards each other, and that the connection between the two sides comprises a bottom (13) of the V-shaped track, the angle between the sides being between 70-110 degrees.

3. An apparatus (1) according to claim 1 or 2, **characterised in that** the sorting station (6) comprises at least one opening (21) in each of the tracks (9), said opening (21) comprising a first free end (22) of each of the tracks (9) and a second free end (23) of each of the tracks (9), the opening (21) being provided between said free ends (22, 23), said sorting station (6) further comprising at least one connecting profile (24) provided between said free ends.

4. An apparatus (1) according claim 3, **characterised in that** the length of the opening (21) measured between the two free ends (22, 23) is equivalent to or smaller than the length X of the used bricks.

5. An apparatus (1) according to any of the preceding claims, **characterised in that** the apparatus (1) comprises several sorting units (5), each sorting unit comprising several openings (21) placed in each of the tracks (9), each opening (21) having a length dimension equivalent to or smaller than the length X of the used bricks (2).

6. An apparatus (1) according to claims 3-5, **characterised in that** the length of the opening (21) is adjustable.

7. An apparatus (1) according to claims 3-6, **characterised in that** the connection profile (24) comprises a V-shaped profile.

8. An apparatus (1) according to any of the preceding claims, **characterised in that** each sorting unit (5) comprises several sorting stations, (6) and the number of tracks (9) of the transport unit (4) leading the bricks (2) from a first sorting unit (5) to a second unit (5') is reduced from a number A to a number B, and that the final sorting unit is adapted to discard bricks positioned incorrectly in the tracks.

9. An apparatus (1) according to any of the preceding claims, **characterised in that** the apparatus comprises positioning means (26) adapted to position the used bricks (2) in a well-defined position, said positioning means (26) being adapted to position the used bricks in such a way that the first side surfaces (19) of the bricks are facing the first (11) or second (12) side of the transport unit (4).

10. An apparatus (1) according to any of the preceding claims, **characterised in that** the apparatus (1) comprises positioning means (26) between the cleaning unit (7) and the sorting units (5), said posi-

tioning means (26) being adapted to position the used bricks in such a way that the first side surfaces (19) of the bricks are facing the first (11) or second (12) side of the transport unit (4), and that the final sorting unit comprises openings in each tracks provided by gaps, said openings being provided by a first gap (21) of a length l1 in one side of the tracks and a second gap (25) of a length l2 in the other side of the tracks, one of the lengths being larger than X and the other length being smaller than X .

11. An apparatus (1) according to claims 9-10, **characterised in that** the positioning means (26) has a triangular profile and an angle being smaller than 90 degrees of said profile and pointing towards the transport direction of the used bricks (2).

12. An apparatus (1) according to any of the preceding claims, **characterised in that** the cleaning unit (7) comprises a first cleaning station (29') and a second cleaning station (29"), a positioning means (26) being placed between said stations, whereby a side surface (19, 20) of the bricks abutting the first side (11) of the transport unit (4) in the first cleaning station (29') is pivoted/oriented by said positioning means (26) in such a way that the side surface (19, 20) abuts the second side (12) of the transport unit (4) in said second cleaning station (29").

13. An apparatus (1) according to any of the preceding claims, **characterised in that** the cleaning unit (7) comprises a frame comprising a built-in wire net, said cleaning unit (7) being connected to a vibrator (35), whereby the net vibrates by said vibration, and the mortar is removed from the surfaces of the used bricks abutting said nets.

14. A method for removing debris, brick pieces and mortar from used bricks in an apparatus (1), said used bricks comprising a first end (15) and an oppositely placed second end (16), a top upper surface (18) and an oppositely placed lower surface (17), two oppositely placed side surfaces, and a first and a second side surface, said apparatus (1) being adapted to remove mortar, debris and brick pieces , whereby cleaned bricks (3) are provided, said apparatus (1) comprising a transport unit (4) for transporting the used bricks (2) and at least one sorting unit (5) comprising sorting stations (6) for removing mortar and brick pieces from the used bricks, said apparatus (1) further comprising a cleaning unit (7) for removing mortar adhering to the sorted used bricks, **characterised in that** the used bricks are directed to the sorting unit (5) in parallel lines positioning the bricks with their longitudinal dimension oriented substantially parallel to the forward direction of movement of the bricks, where bricks having a length smaller than X are removed from the used bricks in said sorting unit, and where the used and sorted bricks being transported to the cleaning station (7), the mortar being removed from the bricks in said station providing clean bricks, said mortar being removed by action of the cleaning station at the upper surface, lower surface and the side surfaces.

15. Use of an apparatus (1) according to claims 1-13 for carrying out the method according to claim 14.

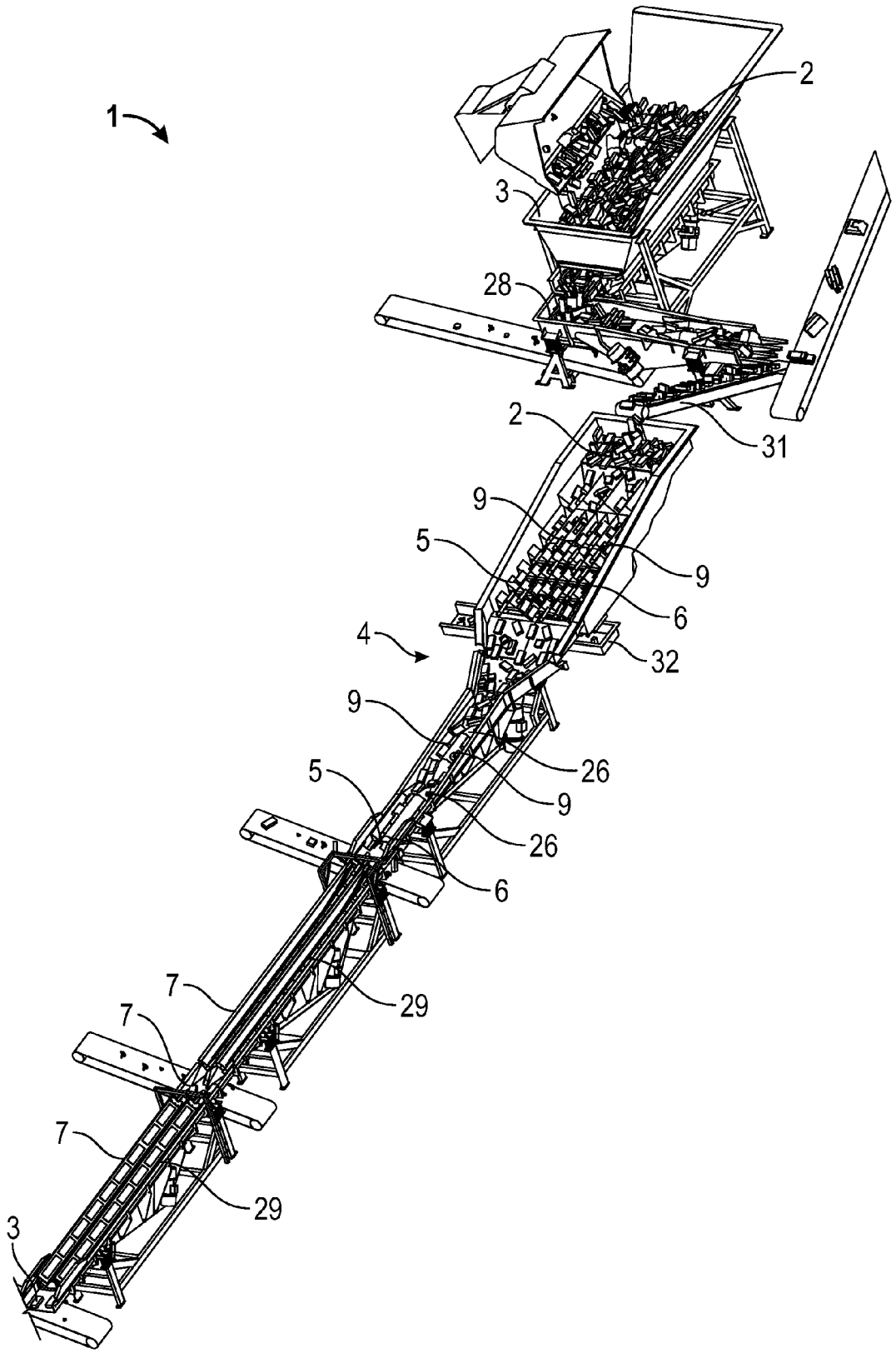

FIG. 1

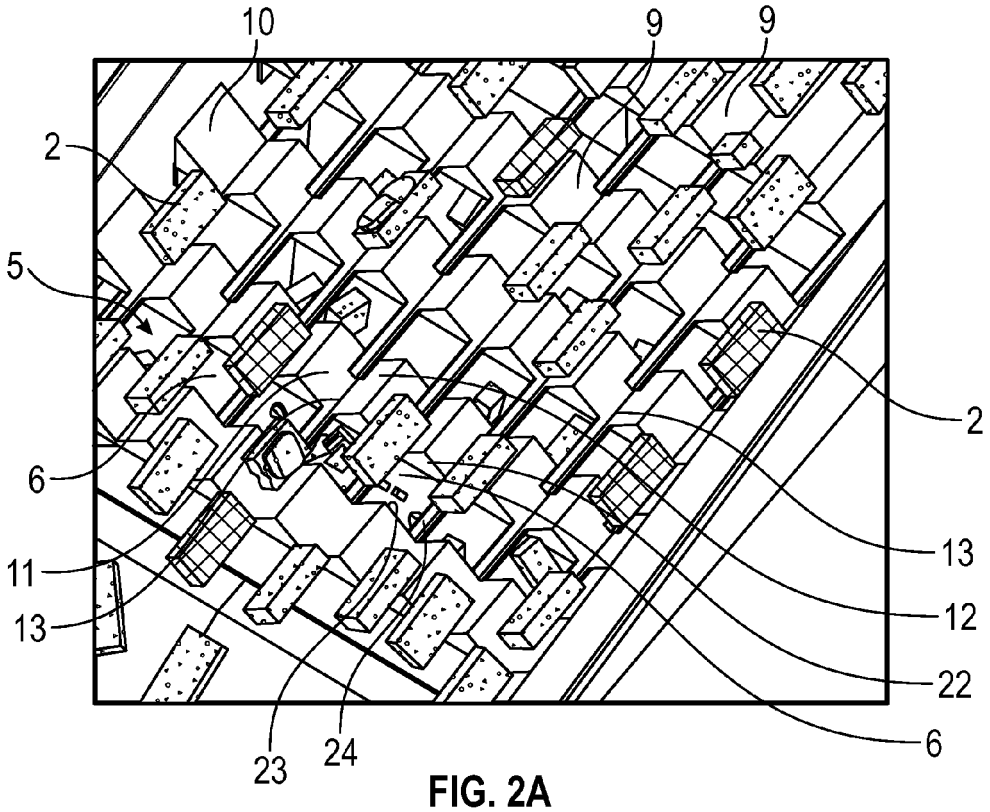

FIG. 2A

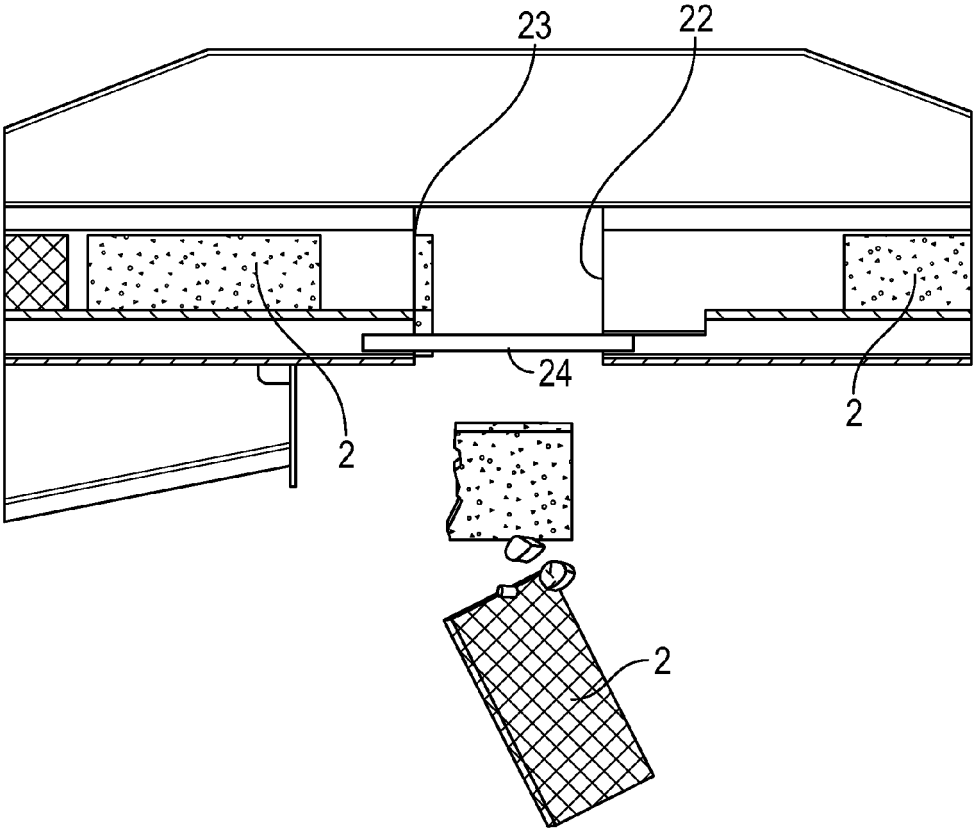

FIG. 2B

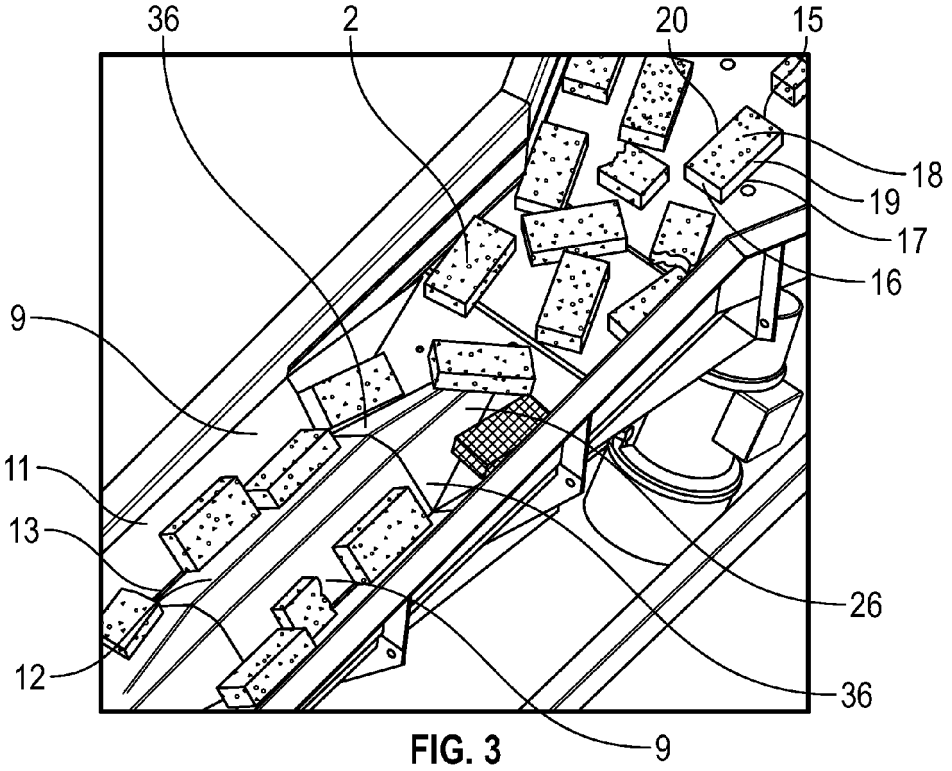

FIG. 3

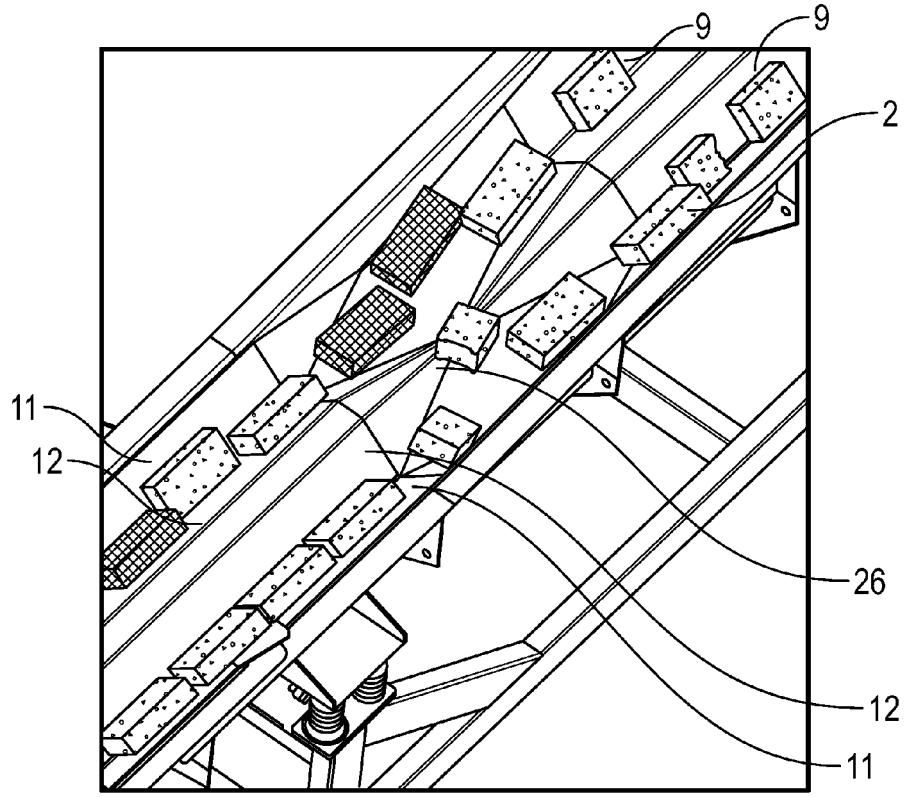

FIG. 4

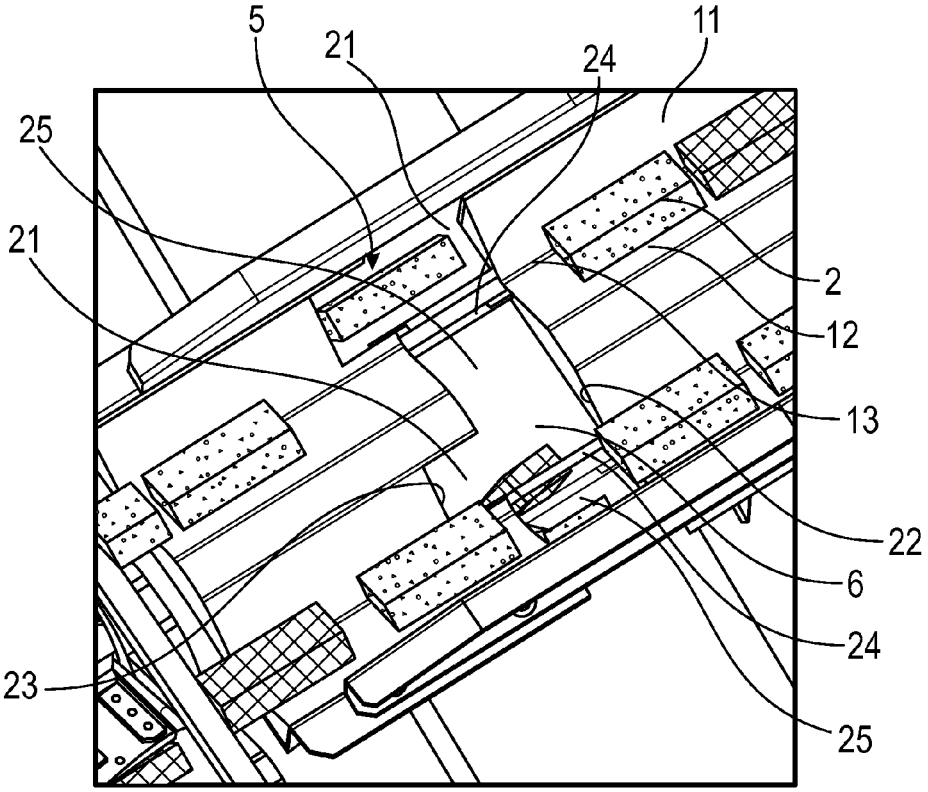

FIG. 5

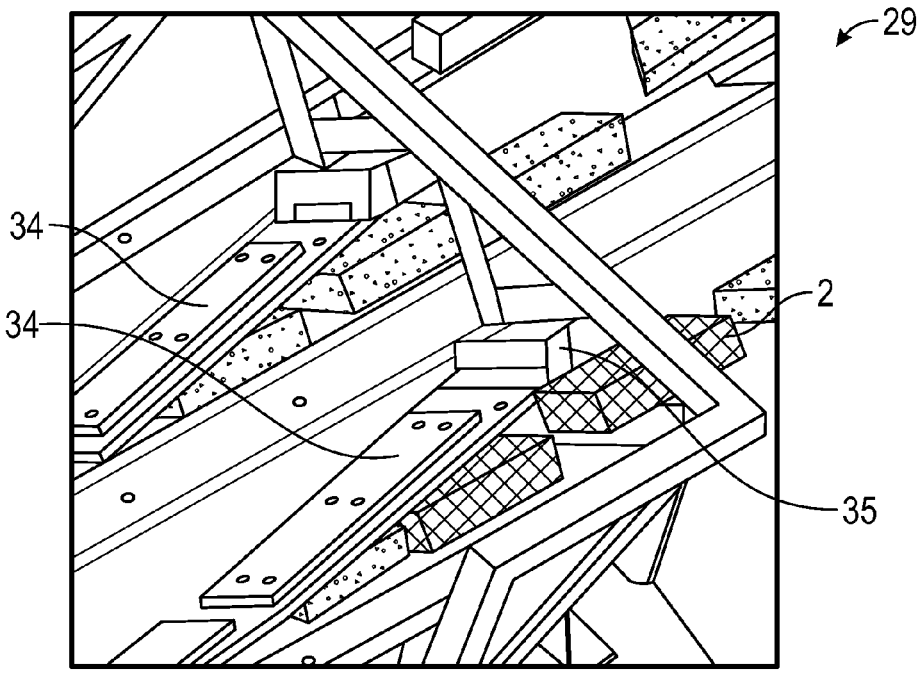

FIG. 6

Europäisches Patentamt
European Patent Office
Office européen des brevets

EUROPEAN SEARCH REPORT

Application Number
EP 13 15 9492

DOCUMENTS CONSIDERED TO BE RELEVANT

Category	Citation of document with indication, where appropriate, of relevant passages	Relevant to claim	CLASSIFICATION OF THE APPLICATION (IPC)
Y,D	US 3 080 860 A (RICCIO JR JOSEPH R) 12 March 1963 (1963-03-12) * the whole document *	1,14,15	INV. B07B13/04 B28D1/00
Y	EP 2 540 403 A1 (GEGE MACHB B V [NL]) 2 January 2013 (2013-01-02) * claim 1; figure 1 *	1,14,15	
Y	DE 199 45 037 A1 (EXNER HUBERTUS [DE]; GRALHER MANFRED [DE]) 29 March 2001 (2001-03-29) * figures 1,3 *	1,14,15	
A,D	DK 176 427 B1 (SKOVSBONYGAARD APS [DK]) 4 February 2008 (2008-02-04) * the whole document *	1,14,15	
A	GB 2 288 363 A (HARPER ADAMS ENTERPRISES LIMIT [GB]) 18 October 1995 (1995-10-18) * the whole document *	1,14	
A	US 2004/173070 A1 (ZUKLEY JOHN D [US]) 9 September 2004 (2004-09-09) * the whole document *	1,14	TECHNICAL FIELDS SEARCHED (IPC) B07B B28D B03B

The present search report has been drawn up for all claims

Place of search	Date of completion of the search	Examiner
The Hague	15 July 2013	Carmichael, Guy

CATEGORY OF CITED DOCUMENTS

X : particularly relevant if taken alone
Y : particularly relevant if combined with another document of the same category
A : technological background
O : non-written disclosure
P : intermediate document

T : theory or principle underlying the invention
E : earlier patent document, but published on, or after the filing date
D : document cited in the application
L : document cited for other reasons

& : member of the same patent family, corresponding document

EPO FORM 1503 03.82 (P04C01)

ANNEX TO THE EUROPEAN SEARCH REPORT ON EUROPEAN PATENT APPLICATION NO. EP 13 15 9492

This annex lists the patent family members relating to the patent documents cited in the above-mentioned European search report. The members are as contained in the European Patent Office EDP file on
The European Patent Office is in no way liable for these particulars which are merely given for the purpose of information.

15-07-2013

Patent document cited in search report	Publication date	Patent family member(s)	Publication date
US 3080860 A	12-03-1963	NONE	
EP 2540403 A1	02-01-2013	NONE	
DE 19945037 A1	29-03-2001	AT 295234 T	15-05-2005
		AU 7658300 A	24-04-2001
		DE 19945037 A1	29-03-2001
		EP 1216108 A1	26-06-2002
		WO 0121329 A1	29-03-2001
DK 176427 B1	04-02-2008	NONE	
GB 2288363 A	18-10-1995	NONE	
US 2004173070 A1	09-09-2004	NONE	

EPO FORM P0459

For more details about this annex : see Official Journal of the European Patent Office, No. 12/82

REFERENCES CITED IN THE DESCRIPTION

This list of references cited by the applicant is for the reader's convenience only. It does not form part of the European patent document. Even though great care has been taken in compiling the references, errors or omissions cannot be excluded and the EPO disclaims all liability in this regard.

Patent documents cited in the description

- US 3080860 A **[0002]**
- DK 176427 **[0047]**