(19) Europäisches Patentamt
European Patent Office
Office européen des brevets

(11) **EP 2 778 508 A1**

(12) **EUROPEAN PATENT APPLICATION**

(43) Date of publication:
17.09.2014 Bulletin 2014/38

(21) Application number: **14158953.1**

(22) Date of filing: **11.03.2014**

(51) Int Cl.:
F21S 6/00 *(2006.01)* ***F21S 10/00*** *(2006.01)*
F21V 17/10 *(2006.01)* *F21V 1/00* *(2006.01)*
F21Y 101/02 *(2006.01)* *F21Y 113/02* *(2006.01)*

(84) Designated Contracting States:
AL AT BE BG CH CY CZ DE DK EE ES FI FR GB GR HR HU IE IS IT LI LT LU LV MC MK MT NL NO PL PT RO RS SE SI SK SM TR
Designated Extension States:
BA ME

(30) Priority: **12.03.2013 TW 102204466**

(71) Applicant: **Ho, Su-Fang**
236 New Taipei City (TW)

(72) Inventor: **Ho, Su-Fang**
236 New Taipei City (TW)

(74) Representative: **Chaillot, Geneviève et al**
Cabinet Chaillot
16-20 Avenue de l'Agent Sarre
B.P. 74
92703 Colombes Cedex (FR)

(54) **Liquid motion lamp holder combined lighting**

(57) The invention relates to a liquid motion lamp holder combined lighting, comprising: a holder (10) having a base (11), a first mounted seat (12), a second mounted seat (13), a support bracket (14), and a transparent bottle (40) having at least two immiscible substances therein and arranged between the first mounted seat (12) and second mounted seat (13). Whereby the transparent bottle (40) turns into liquid motion lamp visual effect through a projected light of an LED bulb (32) at a bottom of the first containing room (121) and required lighting is available through the lighting bulb (52). Due to the design of the containing height (h) of the second containing room (131), an end of the transparent bottle (40) can be moved in the containing height (h) along the vertical axis (A-A) of the base up and down for the transparent bottle (40) to be easily installed and removed between the first mounted seat (12) and second mounted seat (13).

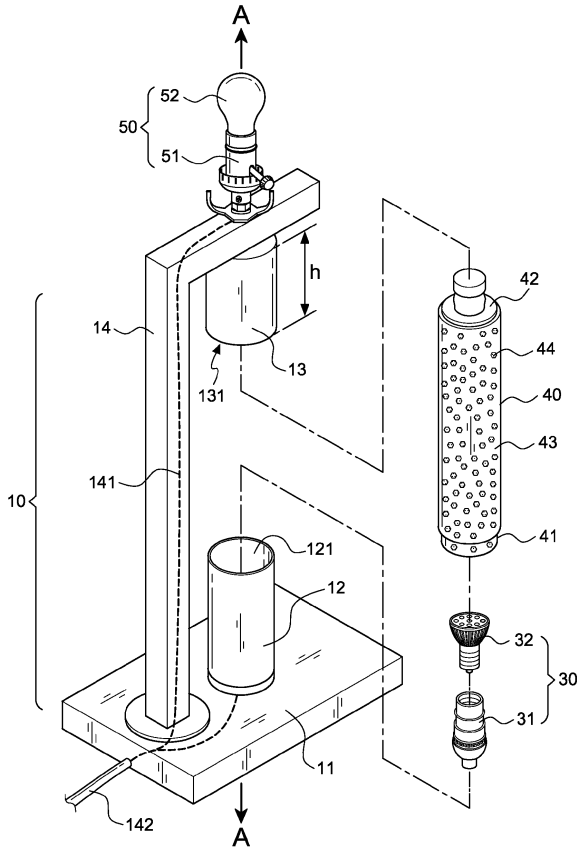

FIG.2

EP 2 778 508 A1

Description

BACKGROUND OF THE INVENTION

1. Field of the Invention:

[0001] The invention relates to a liquid motion lamp holder combined lighting, particularly to a bulb projection liquid motion lamp combining with a lighting lamp seat and to a transparent bottle being easily installed and removed.

2. Description of the Related Art

[0002] Since the sixties of the last century, lava lamps have become a common device in the worldwide university student dormitories and teenage children bedrooms. Lava lamps have been deeply implanted into the popular culture of the United States and many other countries.

[0003] With reference to FIG. 1, US Patent No. 3,570,156 discloses a lava lamp display device **60** comprising: a glass vessel **61** having a bottom **62** arranged in a hollow conical metallic seating **63** and located on an electric light bulb **64.** Moreover, the glass vessel **61** has two immiscible substances. For example, the first substance is liquid **65** and the second substance is paraffin **66** which has a higher density than the liquid **65** at room temperature and a lower density than the liquid **65** after heating. After the electric light bulb **64** is turned on, the paraffin **66** in the bottom **62** of the glass vessel **61** is heated and flows in the liquid **65.** At the same time, the electric light bulb **64** projects the light in the glass vessel **61,** forming a lighting effect and becoming decorations at home and office. The solid paraffin requires a long time for heating to melt while suspended in the liquid. Therefore, in recent practice, the second substance is set to be a solid or liquid, and the specific gravity value thereof must be similar to the liquid of the first substance such that the lava lamp has it a dynamic function via the short heating time. Such improvement and the aforesaid lava lamp structure are so called liquid motion lamp.

[0004] The principle of the liquid motion lamp is to provide a heat from a bulb for the liquid of first substance within the container to produce convection for the second floating substance in the liquid moving up and down with the liquid. Under the illumination of the projection light, the floating objects float and sink, producing brilliant and vivid visuals.

[0005] However, the transparent container without stable installation structure is easily overturned and broken, which allows the internal liquid to harm human body. Therefore, the present invention is provided for enhancing the stability and safety of the liquid motion holder and the convenience of the installing and removing the transparent bottle.

SUMMARY OF THE INVENTION

[0006] It is the first primary object of the present invention to provide a liquid motion lamp holder combined lighting to combine lighting and decoration functions.

[0007] It is the second object of the present invention to provide stable liquid motion lamp holder to avoid overturning and falling apart the transparent container which is able to harm human body by flowing-out liquid of the transparent container.

[0008] It is the last object of the present invention to provide a liquid motion lamp transparent bottle and a bulb which are easy to be installed and removed for increasing the convenience and security effects.

[0009] In order to achieve the above objects, the liquid motion lamp holder improvement comprises: a holder having a base on a bottom thereof; a first mounted seat having a bottom mounted on the base and a first containing room with an upward opening at an inner periphery thereof; a second mounted seat arranged on a top of the holder and having a second containing room with a downward opening at an inner periphery thereof and the second containing room having a containing height of at least 5cm; a support bracket having an end connecting to a lower end of the holder and another end connecting to the second mounted seat for centers of the first mounted seat and second mounted seat to be vertically located on an axis of the base, being in an up-down corresponding state; a projecting light source including a first lamp seat mounted in the first containing room of the first mounted seat and a bulb mounted on the first lamp seat; a lighting lamp including a second lamp seat mounted on the support bracket and a lighting bulb mounted on the second lamp seat; and a transparent bottle arranged between the first mounted seat and second mounted seat and having two immiscible substances therein, an upper end for moving upward to the second containing room to a predetermined height and a lower end for moving downward to the first containing room so that the transparent bottle is securely positioned between the second containing room and first containing room.

[0010] Whereby the transparent bottle turns into liquid motion lamp visual effect through the projecting light source and required lighting is available through the lighting bulb, and the design of the second containing room allows an end of the transparent bottle to be moved in the containing height along the vertical axis of the base up and down for the transparent bottle to be easily installed and removed between the first mounted seat and second mounted seat.

BRIEF DESCRIPTION OF THE DRAWINGS

[0011]

FIG. 1 is a schematic view of a conventional lava lamp;

FIG. 2 is an exploded perspective view of a preferred

embodiment in accordance with the present invention;

FIG. 3 is a schematic view of a preferred embodiment in accordance with the present invention, illustrating the design of a containing height;

FIG. 4 is a schematic view of a preferred embodiment in accordance with the present invention, illustrating a transparent bottle in an installation state;

FIG. 5 is a schematic view of a preferred embodiment in accordance with the present invention, illustrating a transparent bottle in a disassembly state;

FIG. 6 is a sectional view of the second preferred embodiment in accordance with the present invention, illustrating in an assembly state;

FIG. 6A is an enlarged sectional view of 6A in FIG. 6; and

FIG. 7 is a perspective view of the third preferred embodiment in accordance with the present invention, illustrating in an assembly state.

DETAILED DESCRIPTION OF THE PREFERRED EMBODIMENT

[0012] Referring to FIGS. 2 and 3, the preferred embodiment of a liquid motion lamp holder combined lighting in accordance with the present invention comprises: a holder **10** having a base **11** on a bottom thereof for placing on a ground or desktop; a first mounted seat **12** having a bottom mounted on the base **11** and a first containing room **121** with an upward opening at an inner periphery thereof; a second mounted seat **13** arranged on a top of the holder **10** and having a second containing room **131** with a downward opening at an inner periphery thereof and a containing height **h** of at least 5cm; a support bracket **14** having an end connecting to a lower end of the holder **10** and another end connecting to the second mounted seat **13** for centers of the first mounted seat **12** and second mounted seat **13** to be vertically located on an axis **A-A** of the base **11,** being in an up-down corresponding state.

[0013] With the reference to FIG. 2, a projecting light source **30** as a heat source and illumination includes a first lamp seat **31** mounted at a bottom of the first containing room **121** of the first mounted seat **12** and a bulb **32** mounted on the first lamp seat **31.** In the embodiment, the bulb **32** is an LED bulb but it is not a limitation. Moreover, a lighting lamp **50** includes a second lamp seat **51** mounted on a top of the support bracket **14** and a lighting bulb **52** mounted on the second lamp seat **51.** The support bracket **14** is hollow for a wire **141** to pass through and connect to the second mounted seat **51** and a power cord **142**.

[0014] With the reference to FIG. 2, a transparent bottle **40** includes two immiscible substances therein. In the embodiment, the first substance is a solution **43** mixed with calcium nitrate and water and the second substance is a plurality of glitter paillettes **44** having similar specific gravity with the solution **43** but it is not a limitation. It is applicable for only if the second substance is suspended in the first substance and it is a prior art and thus will not be described in details here. The transparent bottle **40** as shown in FIG. 3 has an upper end **42** for moving upward to the second containing room **131** to a predetermined height and an inserted section **41** for moving downward to the first containing room **121** so that the transparent bottle **40** is vertically positioned between the second containing room **131** and first containing room **121** and the inserted section **41** has an external diameter slightly smaller than an external diameter of the transparent bottle **40** for quick positioning in the first containing room **121.**

[0015] Whereby the transparent bottle **40** turns into liquid motion lamp visual effect through a projected light of the LED bulb **32** and required lighting is available through the lighting bulb **52.** Due to the design of the containing height **h** of the second containing room **131,** the upper end **42** of the transparent bottle **40** can be vertically moved in the containing height **h** up and down such that the transparent bottle **40** is easily installed and removed between the first mounted seat **12** and second mounted seat **13.**

[0016] With the reference to FIGS. 3 and 4, the upper end **42** of the transparent bottle **40** is first penetrated into the second containing room **131** of the second mounted seat **13** and then the transparent bottle **40** is moved downward until the inserted section **41** of the transparent bottle **40** is inserted into the first containing room **121** of the first mounted seat **12.** Due to the upper end **42** of the transparent bottle **40** in the second containing room **131** and the inserted section **41** of the transparent bottle **40** in the first containing room **121,** the transparent bottle **40** is securely mounted between the first mounted seat **12** and second mounted seat **13.**

[0017] FIG. 5 illustrates the transparent bottle **40** in a disassembly state. When removing the transparent bottle **40,** the first step is to axially move the transparent bottle **40** upward until the upper end **42** of the transparent bottle **40** goes deep to the containing height **h** of the second containing room **131** and the inserted section **41** of the transparent bottle **40** completely detaches from first containing room **121** of the first mounted seat **12;** the second step is to move the transparent bottle **40** downward until the upper end **42** close to the bottom end of the second containing room **131** and then continue downward moving at an angle until the transparent bottle **40** completely detaches from the second mounted seat **13.** The user can not only change the transparent bottle **40** but the LED bulb **32** by the above-mentioned steps.

[0018] FIGS. 6 and 6A illustrate the second embodiment. The transparent bottle **40** is mounted between the first mounted seat **12** and the second mounted seat **13** by a joint sleeve **20.** The joint sleeve **20** has a hollow containing room **21** at an inner periphery thereof and an inserted section **22** at a lower end thereof and an external diameter of the inserted section **22** is lightly smaller than an external diameter of an upper end of the joint sleeve

20. In this embodiment, the inserted section **22** is inserted into the first containing room **121** of the first mounted seat **12** and the inserted section **41** of the transparent bottle **40** is inserted into the joint sleeve **20** of the first mounted seat **12** for securely positioning the transparent bottle **40** on the vertical axis **A-A** of the base **11.** At the same time, the bottom of the transparent bottle **40** is connected to the top of the LED bulb **32** for directly conducting the heat of the LED bulb **32** to the transparent bottle **40.** With the reference to FIG. 6, the present invention provides the joint sleeve **20** to reduce the height of the first mounted seat **12** for easily changing the LED bulb **32.** Moreover, the dissembled method of the transparent bottle **40** is similar to the description of Figure 5. The first step is to axially move the transparent bottle **40** as well as the joint sleeve **20** upward until the upper end **42** of the transparent bottle **40** goes deep to the containing height **h** of the second containing room **131** and the inserted section **41** of the transparent bottle **40** completely detaches from first containing room **121** of the first mounted seat **12;** the second step is to remove the joint sleeve **20** from the inserted section **41** of the transparent bottle **40;** the third step is to move the transparent bottle **40** downward until the upper end **42** close to the bottom end of the second containing room **131** and then continue downward moving at an angle until the transparent bottle **40** completely detached from the second mounted seat **13.** The user can change the transparent bottle **40** but the LED bulb **32** by the above-mentioned steps. In this embodiment, a lampshade **15** is arranged on a top of the support bracket **14** for increasing lighting aesthetic.

[0019] FIG. 7 illustrates the last embodiment of the present invention showing the liquid motion lamp holder applied to a vertical lamp. This embodiment has the same components as the second embodiment. The only difference between the two embodiments is that the length of the first mounted seat **12,** transparent bottle **40** and the support bracket **14** in this embodiment is longer than in the second embodiment.

[0020] Based on the features disclosed, the present invention provides the liquid motion lamp holder combined lighting to combine lighting and decoration functions-to avoid a transparent container overturning and falling apart which is able to harm human body by flowing-out liquid of the transparent container. The present invention further provides a liquid motion lamp transparent bottle and an LED bulb which are easy to be installed and removed for increasing the convenience and security effects.

Claims

1. A liquid motion lamp holder combined lighting, particularly to a lamp holder combining a liquid motion lamp and a lighting lamp seat, comprising:

a holder (10) having a base (11) on a bottom thereof; a first mounted seat (12) having a bottom mounted on the base (11) and a first containing room (121) with an upward opening at an inner periphery thereof; a second mounted seat (13) arranged on a top of the holder (10) and having a second containing room (131) with a downward opening at an inner periphery thereof and the second containing room (131) having a containing height (h) of at least 5cm; a support bracket (14) having an end connecting to a lower end of the holder (10) and another end connecting to the second mounted seat (13) for centers of the first mounted seat (12) and second mounted seat (13) to be vertically located on an axis (A-A) of the base (11), being in an up-down corresponding state;

a projecting light source (30) including a first lamp seat (31) mounted in the first containing room (121) of the first mounted seat (12) and a bulb (32) mounted on the first lamp seat (31);

a lighting lamp (50) including a second lamp seat (51) mounted on the support bracket (14) and a lighting bulb (52) mounted on the second lamp seat (51); and

a transparent bottle (40) arranged between the first mounted seat (12) and second mounted seat (13) and having at least two immiscible substances therein, an upper end (42) for moving upward to the second containing room (131) to a predetermined height (h) and a lower end for moving downward to the first containing room (121) so that the transparent bottle (40) is securely positioned between the second containing room (131) and first containing room (121); whereby the transparent bottle (40) turns into liquid motion lamp visual effect through the projecting light source (30) and required lighting is available through the lighting bulb (50), and the design of the containing height (h) of the second containing room (131) allows an end of the transparent bottle (40) to be moved in the containing height (h) along the vertical axis (A-A) of the base (11) up and down for the transparent bottle (40) to be easily installed and removed between the first mounted seat (12) and second mounted seat (13).

2. The liquid motion lamp holder combined lighting as claimed in claim 1, further comprising a joint sleeve (20) mounted between the transparent bottle (40) and the first mounted seat (12) and the joint sleeve (20) has a hollow containing room (21) at an inner periphery thereof and an inserted section (22) having a smaller diameter on a lower end of the joint sleeve (20) for securely inserting into the first containing room (121) of the first mounted seat (12) and the transparent bottle (40) has an inserted section (41) at a lower end thereof for securely inserting into the

hollow containing room (21) of the joint sleeve (20).

3. The liquid motion lamp holder combined lighting as claimed in claim 2, wherein the bulb (32) is an LED bulb.

4. The liquid motion lamp holder combined lighting as claimed in claim 1, wherein the transparent bottle (40) has a bottom in contact with the top of the LED bulb (32) for the heat of the LED bulb (32) directly conducting to the bottom of the transparent bottle (40).

5. The liquid motion lamp holder combined lighting as claimed in claim 1, wherein the two immiscible substances include a solution (43) mixed with calcium nitrate and water and a plurality of glitter paillettes (44) having similar specific gravity with the solution (43).

6. The liquid motion lamp holder combined lighting as claimed in claim 1, wherein the support bracket (14) is hollow for a wire (141) to pass through and connect to the second mounted seat (51).

7. The liquid motion lamp holder combined lighting as claimed in claim 1, further comprising a lampshade (15) arranged on a top of the support bracket (14) .

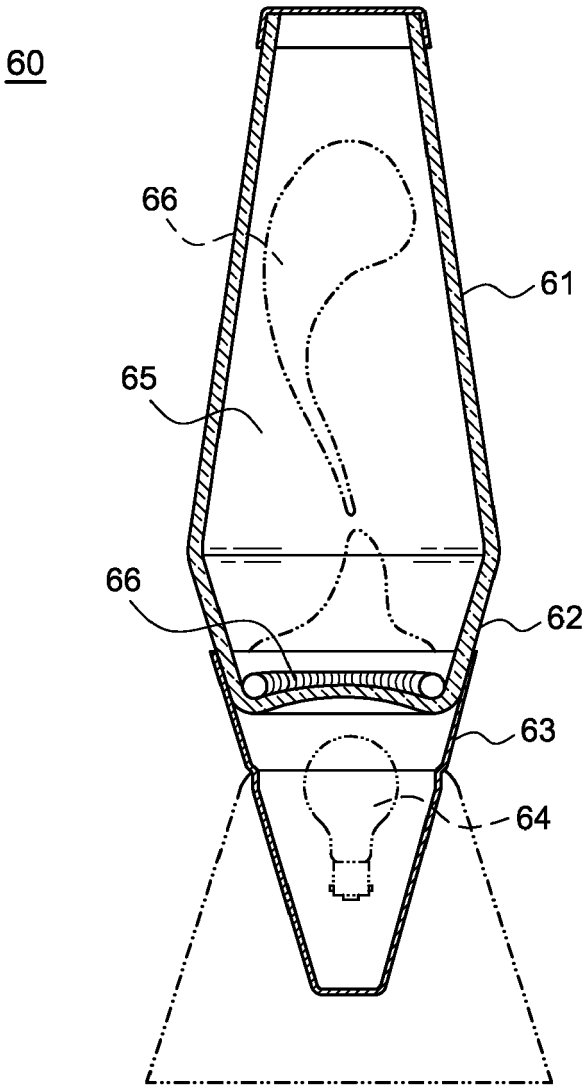

FIG.1
PRIOR ART

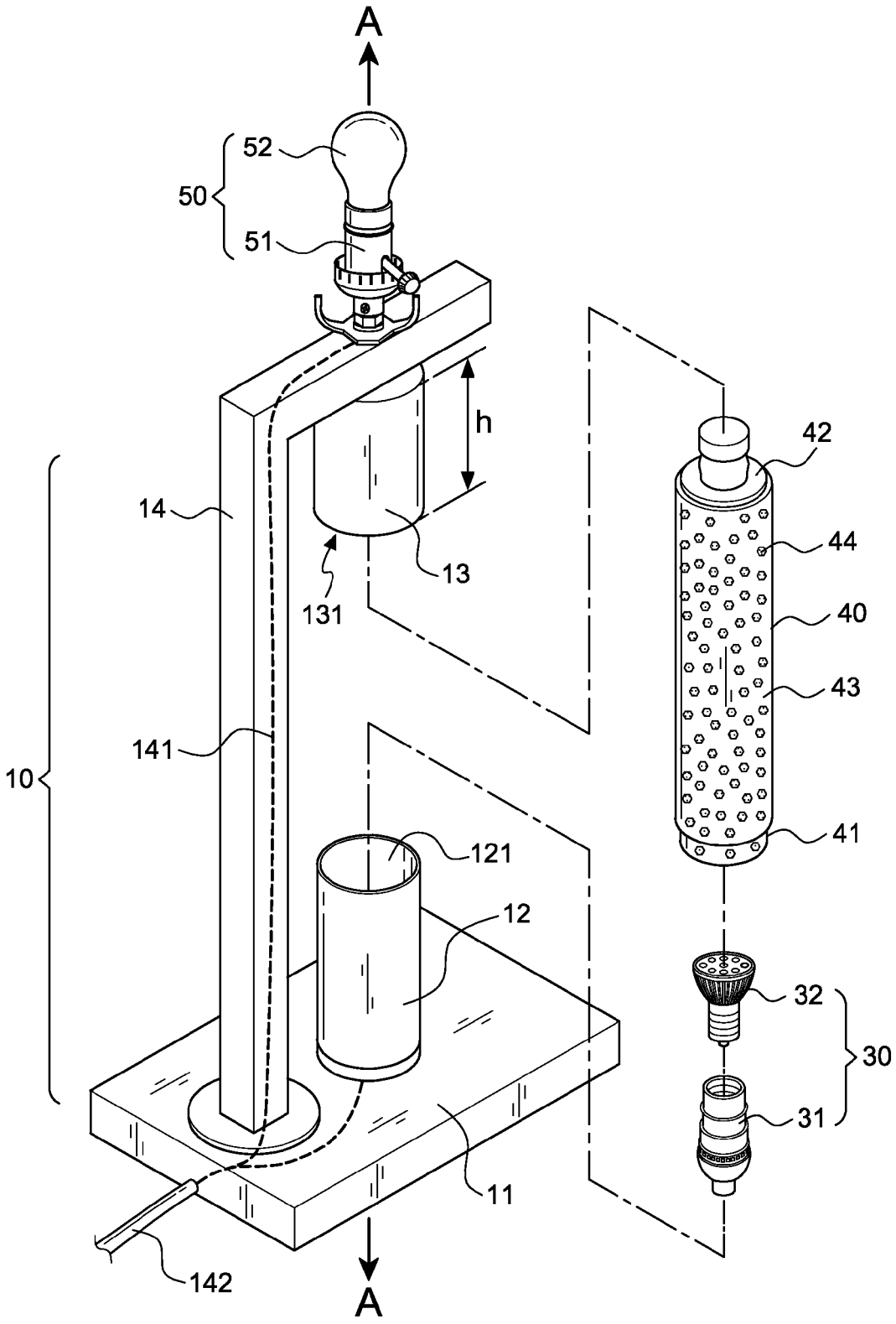

FIG.2

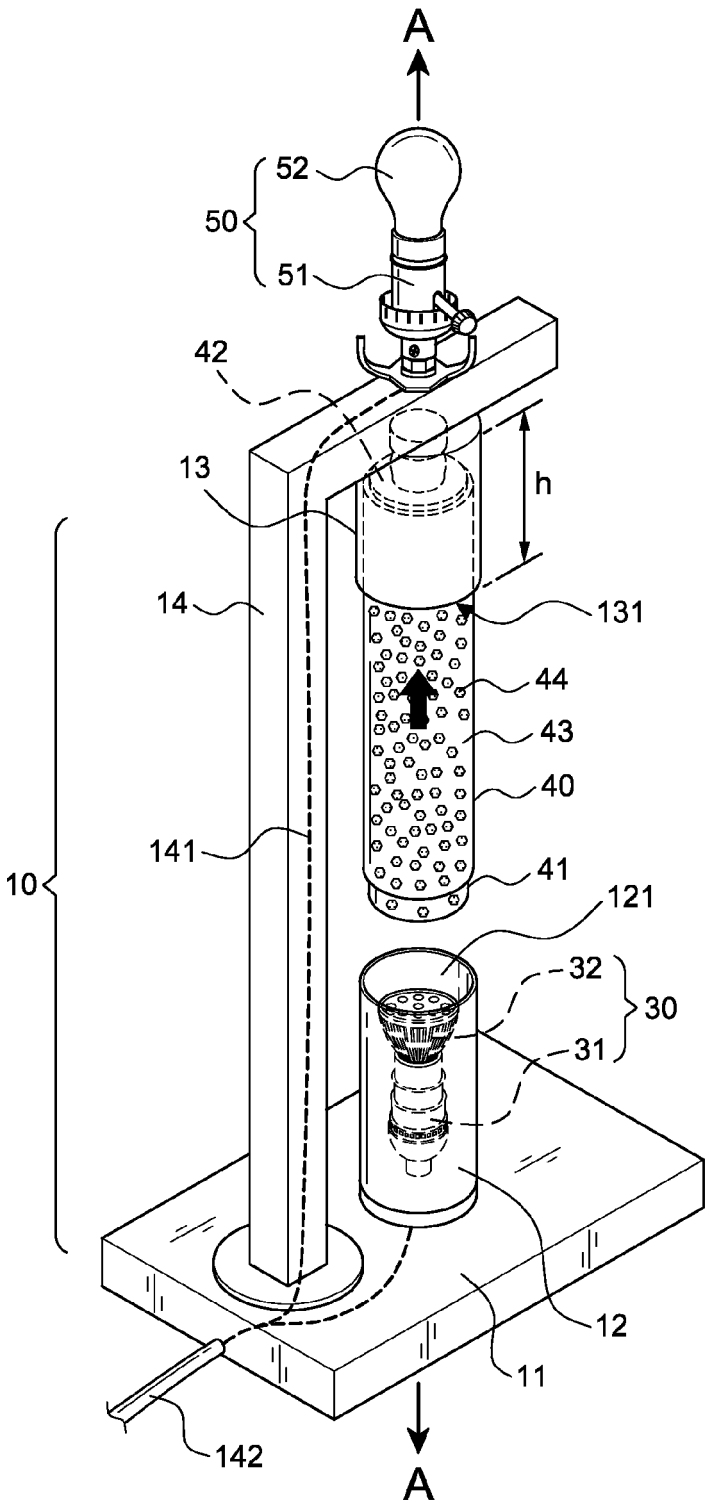

FIG.3

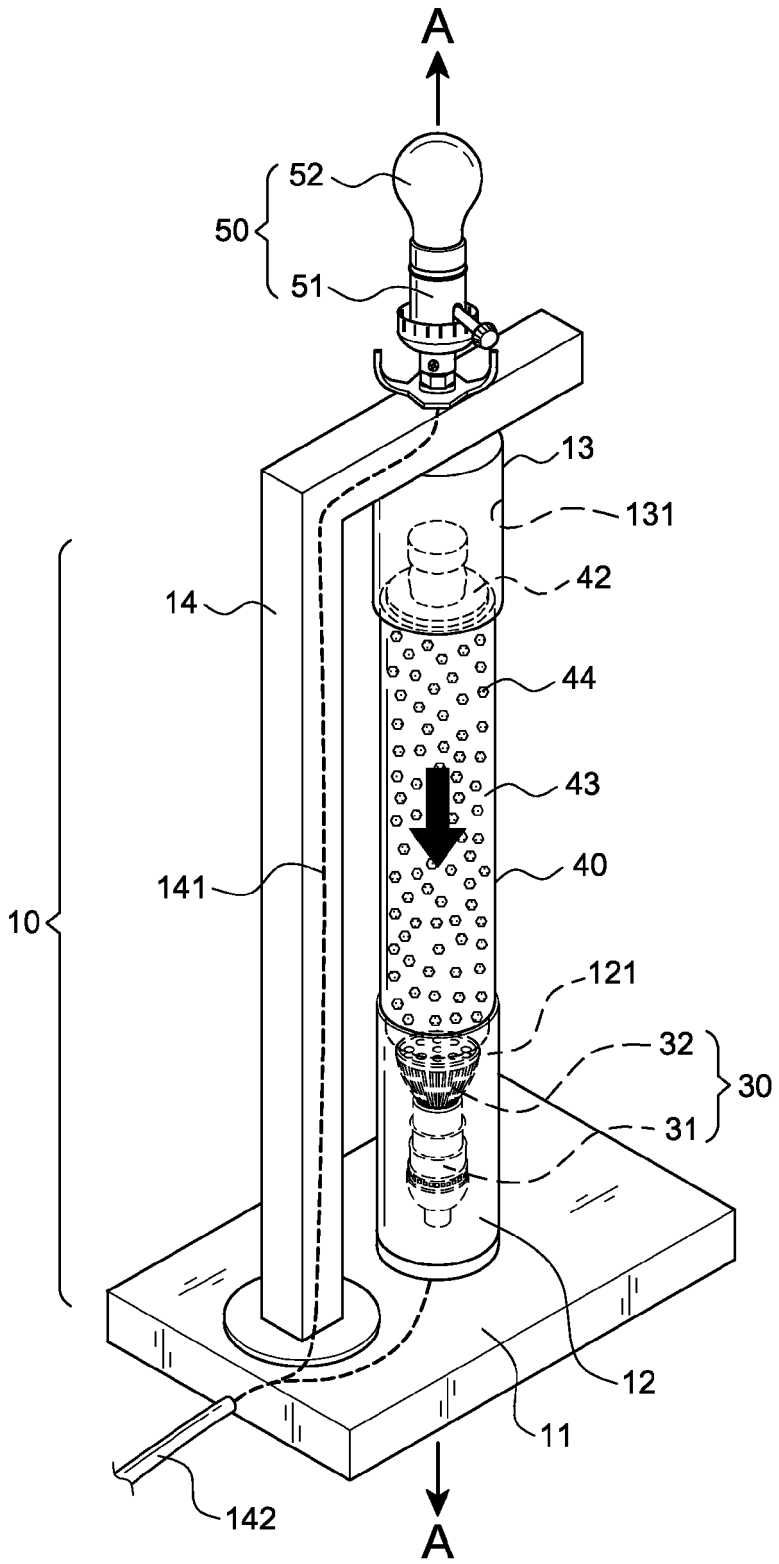

FIG.4

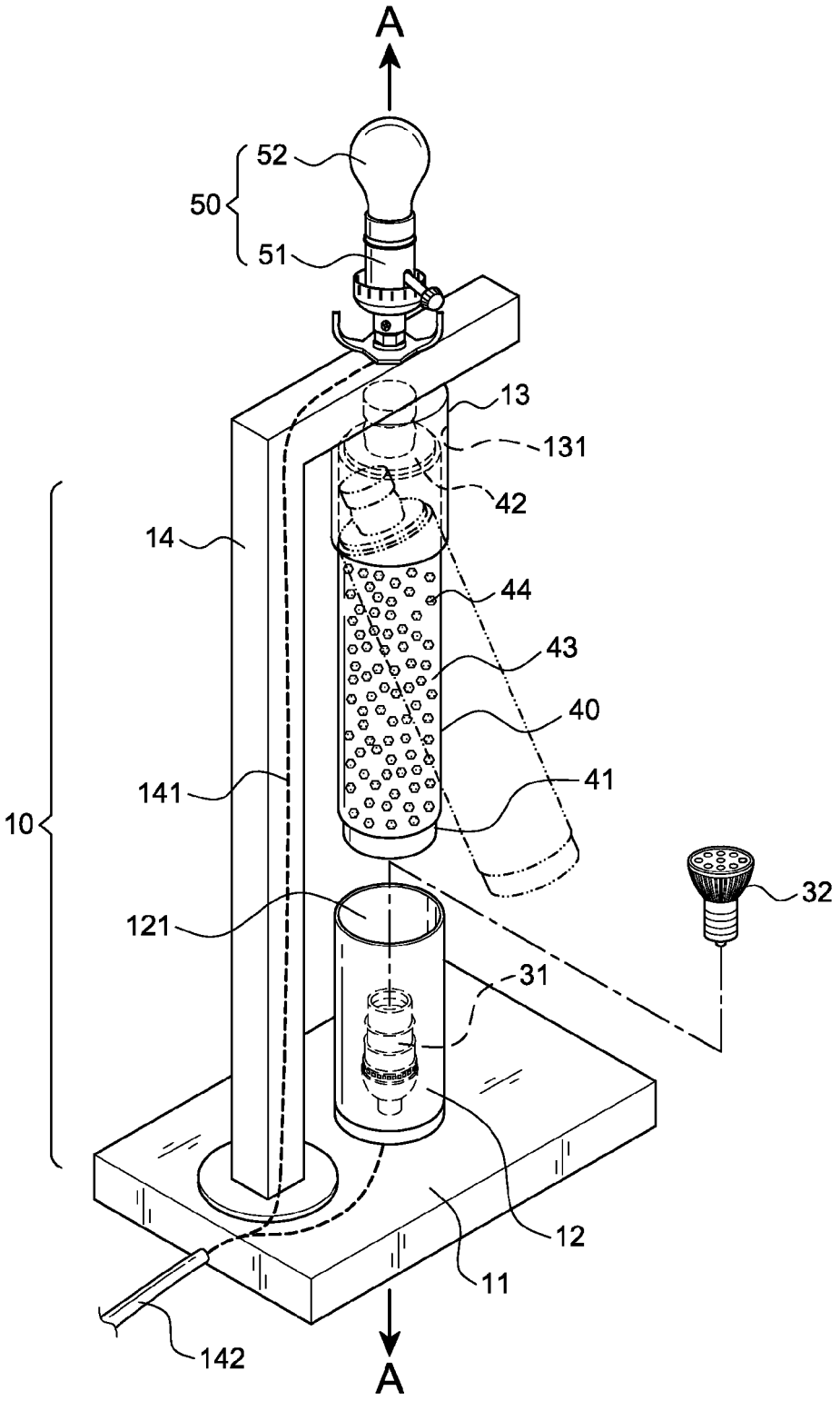

FIG.5

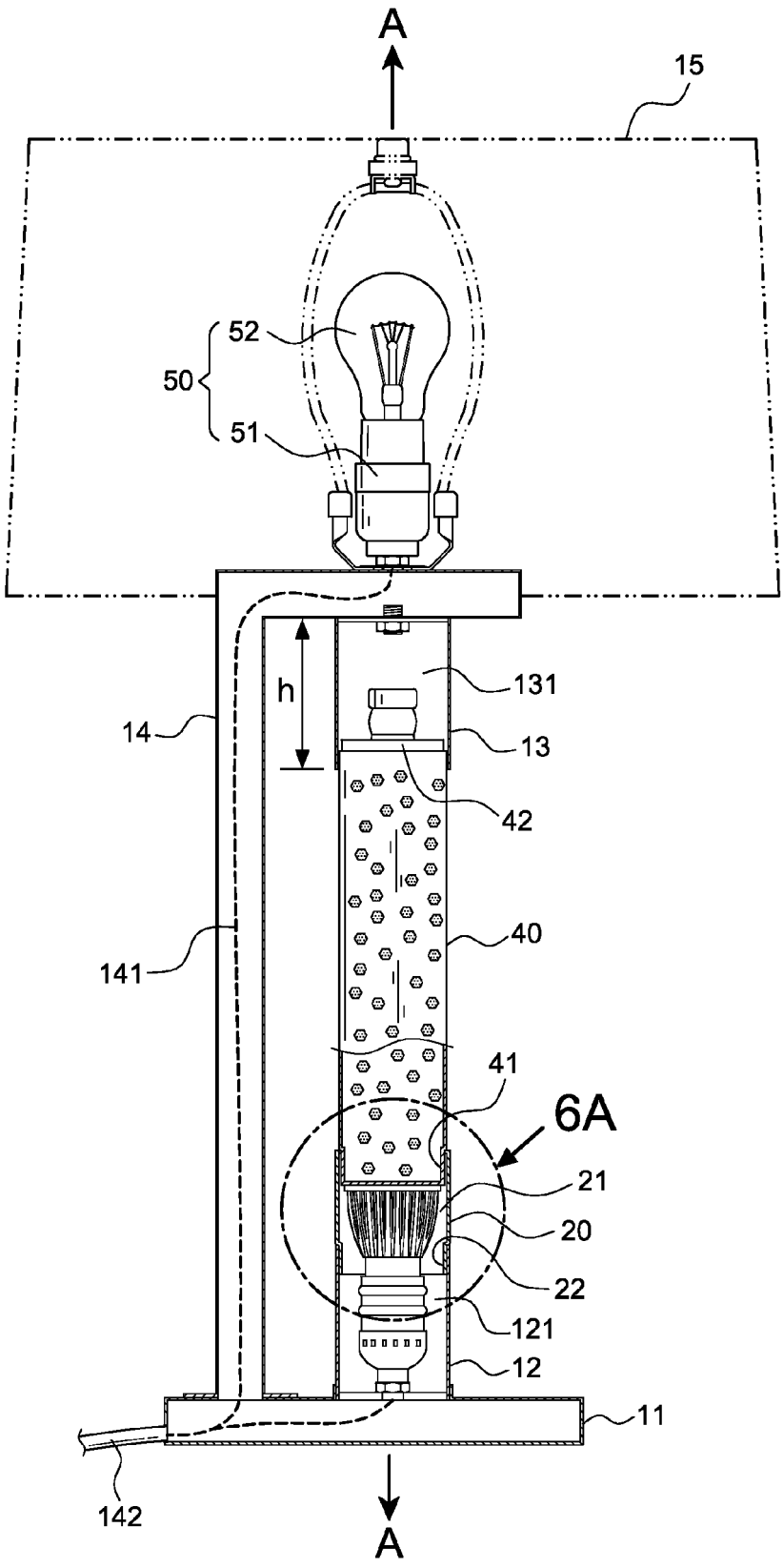

FIG.6

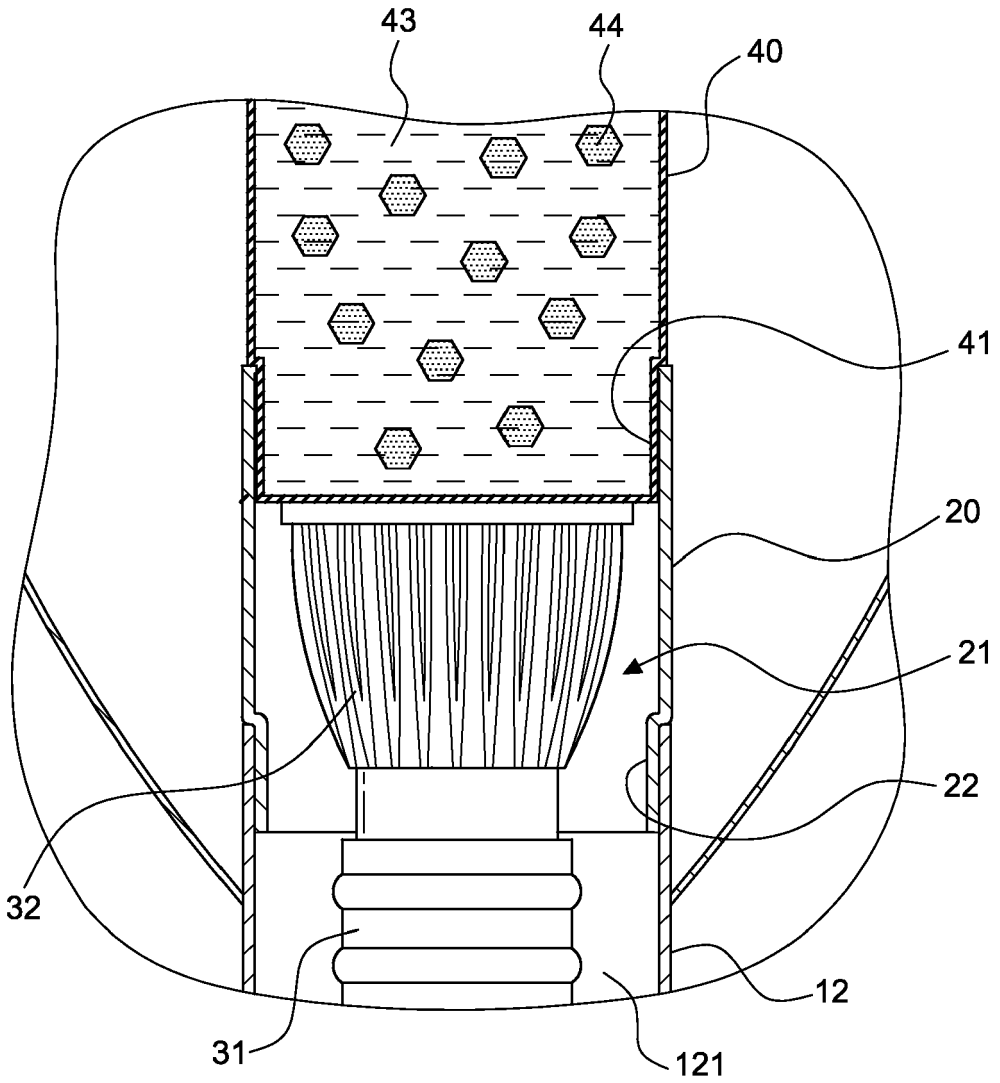

FIG.6A

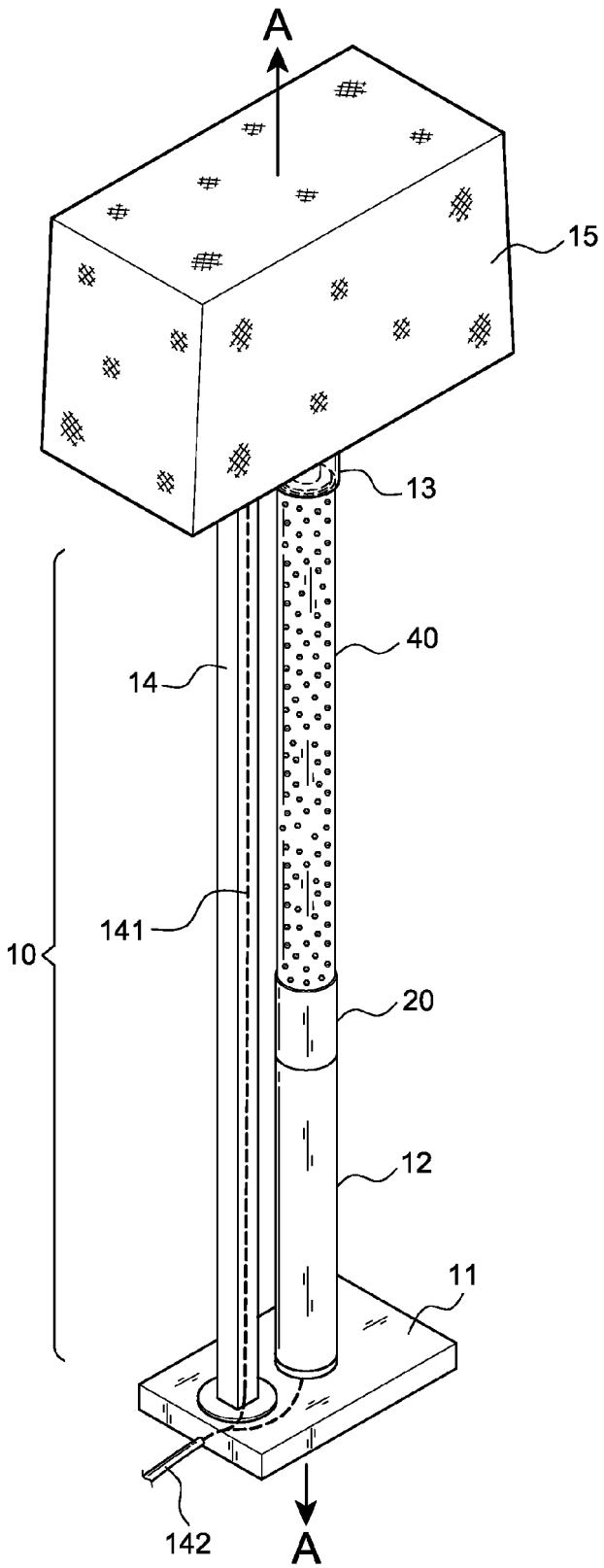

FIG.7

Europäisches Patentamt
European Patent Office
Office européen des brevets

EUROPEAN SEARCH REPORT

Application Number
EP 14 15 8953

DOCUMENTS CONSIDERED TO BE RELEVANT

Category	Citation of document with indication, where appropriate, of relevant passages	Relevant to claim	CLASSIFICATION OF THE APPLICATION (IPC)
A	US 2003/202340 A1 (WU CHING-YEN [TW]) 30 October 2003 (2003-10-30) * the whole document *	1-7	INV. F21S6/00 F21S10/00 F21V17/10
A	TW M 443 134 U (CAI J) 11 December 2012 (2012-12-11) * figures 2,7 *	1-7	ADD. F21V1/00
A,P	-& EP 2 679 885 A2 (HO SU-FANG [TW]) 1 January 2014 (2014-01-01) * paragraphs [0010], [0012], [0013], [0017] *	1-7	F21Y101/02 F21Y113/02
X,P	CN 203 322 986 U (HE SUFANG) 4 December 2013 (2013-12-04) * the whole document *	1-7	
X,P	CN 202 993 031 U (HE SUFANG) 12 June 2013 (2013-06-12) * figures 2-8 *	1-7	

TECHNICAL FIELDS SEARCHED (IPC)

F21S
F21V
F21W

The present search report has been drawn up for all claims

Place of search	Date of completion of the search	Examiner
The Hague	28 May 2014	Dinkla, Remko

CATEGORY OF CITED DOCUMENTS

X : particularly relevant if taken alone
Y : particularly relevant if combined with another document of the same category
A : technological background
O : non-written disclosure
P : intermediate document

T : theory or principle underlying the invention
E : earlier patent document, but published on, or after the filing date
D : document cited in the application
L : document cited for other reasons

& : member of the same patent family, corresponding document

EPO FORM 1503 03.82 (P04C01)

ANNEX TO THE EUROPEAN SEARCH REPORT ON EUROPEAN PATENT APPLICATION NO. EP 14 15 8953

This annex lists the patent family members relating to the patent documents cited in the above-mentioned European search report. The members are as contained in the European Patent Office EDP file on
The European Patent Office is in no way liable for these particulars which are merely given for the purpose of information.

28-05-2014

Patent document cited in search report	Publication date	Patent family member(s)	Publication date
US 2003202340 A1	30-10-2003	NONE	
TW M443134 U	11-12-2012	CN 203431587 U	12-02-2014
		EP 2679885 A2	01-01-2014
		TW M443134 U	11-12-2012
		US 2014003036 A1	02-01-2014
EP 2679885 A2	01-01-2014	CN 203431587 U	12-02-2014
		EP 2679885 A2	01-01-2014
		TW M443134 U	11-12-2012
		US 2014003036 A1	02-01-2014
CN 203322986 U	04-12-2013	NONE	
CN 202993031 U	12-06-2013	NONE	

EPO FORM P0459

For more details about this annex : see Official Journal of the European Patent Office, No. 12/82

REFERENCES CITED IN THE DESCRIPTION

This list of references cited by the applicant is for the reader's convenience only. It does not form part of the European patent document. Even though great care has been taken in compiling the references, errors or omissions cannot be excluded and the EPO disclaims all liability in this regard.

Patent documents cited in the description

- US 3570156 A **[0003]**