(19) Europäisches Patentamt
European Patent Office
Office européen des brevets

(11) EP 2 832 658 A1

(12) EUROPEAN PATENT APPLICATION

(43) Date of publication:
04.02.2015 Bulletin 2015/06

(51) Int Cl.:
B65D 83/00 *(2006.01)*

(21) Application number: **13382312.0**

(22) Date of filing: **30.07.2013**

(84) Designated Contracting States:
AL AT BE BG CH CY CZ DE DK EE ES FI FR GB GR HR HU IE IS IT LI LT LU LV MC MK MT NL NO PL PT RO RS SE SI SK SM TR
Designated Extension States:
BA ME

(71) Applicant: **ainia**
46980 Paterna (ES)

(72) Inventors:
- **Enguix Nicolás, Carlos**
  E-46980 Paterna (ES)
- **Zomenõ Alcalá, Pedro**
  E-46980 Paterna (ES)
- **García Reverte, José**
  E-46980 Paterna (ES)
- **Blasco Piquer, Miguel**
  E-46980 Paterna (ES)
- **Subirats Huerta, Sebastián**
  E-46980 Paterna (ES)

(74) Representative: **ABG Patentes, S.L.**
Avenida de Burgos, 16D
Edificio Euromor
28036 Madrid (ES)

(54) Dispensing container and method of filling the container

(57) The present invention relates to a dispensing container for viscous products comprising a containing body (1) with a flexible side wall (1.1), a bottom wall (1.2) and a neck (1.3); an elastic bag (2) suitable for containing a viscous product (9) and arranged inside the containing body (1), and a closure head (4) of the containing body (1) comprising a supply hole (8) for supplying the product (9) with a product outlet valve (8.1), said valve preventing the entrance of outer air into the container. The bag (2) is elastic and is attached by its opening to the area of the neck (1.3) of the containing body (1), forming a first leak-tight chamber (5) between the outer face of said elastic bag (2) and the side wall (1.1) of the containing body (1). The head (4) and the elastic bag (2) form a second leak-tight chamber (6). The containing body (1) comprises a hole (10) with an air inlet valve (10.1) suitable for allowing air flow only from outside the dispensing container towards the inside of the leak-tight chamber (5) in response to a depression in said first chamber (5).

EP 2 832 658 A1

Description

Object of the Invention

[0001] The present invention relates to a dispensing container for liquid, viscous, pasty or powdery products which may create problems for being completely extracted from a container.

[0002] The invention is comprised in the field of container technologies, and especially for containers in which the contained product is extracted due to pressure manually exerted by a user's hand on the walls thereof.

Background of the Invention

[0003] Products such as food sauces, gels, paints, toothpastes, cosmetic creams, etc., limit and complicate the extraction of said products from the containers that contain them due to physical properties, such as surface tension, humidity and viscosity, the usual containers requiring periods of rest, being shaken, etc. for the possible, and nonetheless incomplete, extraction of the product. By way of example, in conventional sauce containers, between 15 and 20% of the contained product remains adhered to the walls inside the container.

[0004] In the state of the art there are different devices to optimize emptying out products with features of sticking to walls of the containers that contain them. Document FR2800718 describes a container that contains a flexible bag inside it that receives the product. Since said container has a limited path it can take every time it is pressed, product extraction is limited to small amounts. Furthermore, the outer body of the container requires particular features, such as an open bottom and vertical walls, which do not allow it to adapt to a container with an irregular outer shape.

[0005] Document EP505611 describes a container that also has a flexible bag inside it which allows recovering most of the packaged product, but, nevertheless, product residues remain in the neck part of the receptacle because the flexible bag does not reach that area. The amount of remaining product will depend in this regard on the diameter of the neck of the container. In such invention the outer body of the container requires features that limit it to not being able to adapt to any shape or outline because it requires an open area in the shoulder area of the body in order to be able to introduce the flexible bag. Furthermore, if the shape of the container has an outline throughout the body, this would leave areas where the flexible bag cannot be reached, limiting the efficiency of the amount of product introduced with respect to the volume of the outer container.

[0006] The device as described in document ES2346054 also contains a flexible inner bag, but it has the drawback of the product falling to the bottom of the flexible inner bag due to gravity if the container is left in the vertical position, thereby complicating the extraction of the product the next time it is to be used. Furthermore, when the product follows this path to the bottom of the inner bag, the mass of the product breaks down due to the adhesion thereof to the walls of the inner bag, which leaves a larger surface of the product exposed to gases from outside the container through the supply hole, the contained product being exposed to drying up and deteriorating. In this device remaining product can also be left in the supply hole, though to a lesser extent than in the device described in the aforementioned document EP505611.

[0007] On the other hand, assembling this internal device with the outer receptacle is limited to being fixed to an outer container with a double opening in order to close or seal the outer body of the container in the side opposite the supply hole once the flexible inner bag is assembled, thereby limiting being able to implement this solution in the different types of containers existing on the market.

Description of the Invention

[0008] The present invention solves the aforementioned problems by means of a dispensing container according to claim 1, a method of filling the dispensing container according to claim 17 and a cartridge for viscous products for dispensing containers according to claim 19. The dependent claims define preferred embodiments of the invention.

[0009] In a first inventive aspecta dispensing container for viscous products is presented, comprising

- a containing body comprising a flexible side wall with an inner face and an outer face, a bottom wall and a neck;
- a bag with an inner face and an outer face and an opening, adapted to contain a viscous product, and arranged inside the containing body, and
- a closure head of the containing body comprising a supply hole for supplying the product, with a product outlet valve, said product outlet valve maintaining pressure for retaining the product towards the outside, and preventing the entrance of outer air into the container,

  wherein,

  the bag is an elastic bag hermetically attached by its opening to the area of the neck of the containing body, forming a first leak-tight chamber between the outer face of said elastic bag and the inner face of the side wall of the containing

body,
the head and the elastic bag form a second leak-tight chamber, and
the containing body comprises a hole with an air inlet valve suitable for allowing air flow only from outside the dispensing container towards the inside of the first leak-tight chamber in response to a depression in said first leak-tight chamber.

[0010] In the context of the invention, elastic bag is understood both as a bag that is made from elastic materials, and as that flexible bag to which elements providing it with elasticity, such as elastic bands or meshes, have been incorporated.
[0011] Advantageously, the elastic bag is directly attached to the neck of the containing body. The elastic bag is preferably attached to the neck of the containing body by means of an elastic fit.
[0012] The elastic bag is preferably made of an elastomeric material, and more preferably, of elastomers selected from elastomers based on polyisoprene, latex, thermoplastic elastomers, special synthetic elastomers, or silicone elastomers.
[0013] The fundamental property that characterizes and defines an elastomeric material is its capacity to undergo large deformations when a force is applied to it, i.e., the possibility of deforming it and, when the force ceases, reversibly returning to its dimension.
[0014] It is known that large deformations are considered to be those which increase size between 5% and 700% or higher. Therefore, for a general plastic, when reference is made to its mechanical behavior, it is understood to work in its elastic area in deformations of less than 2%-3%.
[0015] Alternatively, the elastic bag is made of a material selected from thermoplastic polyurethanes, polybutadiene, natural rubber, synthetic rubber, chloroprene or vinyl.
[0016] The dispensing container for viscous products of the invention advantageously comprises a hermetic connecting ring interposed between the neck and the closure head of the containing body and to which the elastic bag is attached by its opening. The hermetic connecting ring preferably comprises a through hole, and the air inlet valve is placed in the closure head of the containing body, the through hole and said air inlet valve being aligned to establish a passage channel for the air flow from outside the dispensing container towards the inside of the first leak-tight chamber in response to a depression in said first leak-tight chamber.
[0017] The dispensing container according to the invention solves the aforementioned drawback of loss of packaged product due to the impossibility of recovering it in manual extraction, the falling of the product in the flexible inner bag due to gravity when the container is left in the vertical position, and the mass of the product breaking down due to the adhesion thereof to the walls of the flexible inner bag. Said problems are solved by means of the elastic bag provided inside the containing body in combination with the arrangement of the remaining elements involved in the first aspect of the invention. Additionally, the physical-elastic properties of the material with which said bag is made and the features and arrangement of other elements also allow improving several of the aspects and features of the dispensing container of the invention, such as for example the complete extraction of the contained product, even of the remaining product in the supply hole.
[0018] Specifically, the device of the invention

- allows the almost complete extraction of the product, even the remaining product in the supply hole, between 0.1% and 4% being left inside the container as remaining product,
- does not allow the product to break down on the walls of the container, given that at all times, regardless of the amount of remaining product, the elastic bag exerts pressure on the volume of product and maintains it as a single mass, preventing it from being able to dry up or deteriorate and improving the shelf life of the product,
- allows product extraction, regardless of the position in which the container remains (horizontal, inclined, vertical, upside right, upside down),
- allows product extraction, regardless of the amount of remaining product therein,
- improves product extraction times, i.e., the time that lapses between the user acting on the device for extracting the product until the product is extracted from the container through the supply hole of the closure head,
- is independent of the outer shape of the containing body, whether it has pronounced curves, recessed grooves, with dimensions of the opening of the neck lower than the shoulders, etc.
- does not require the containing body to have a double opening to be assembled thereon, allowing a simple assembly,
- allows the possibility of reusing the containing body (which can entail 90% of the weight of the device), - improves recycling of the containing body because it is not fouled by product (being able to be 90% of the weight of the device), and
- allows the containing body to be made of any type of material, provided that said material allows certain flexibility.

[0019] In a second inventive aspect a method of filling the dispensing container of the first aspect of the invention is presented, comprising the following steps:

a) extracting the air existing in the first leak-tight chamber through of the hole of the air inlet valve, until reaching the maximum expansion provided for the elastic bag,
b) placing the air inlet valve and blocking it, such that it does not allow the passage of air in any direction from the outer atmosphere into the leak-tight chamber,
c) filling the elastic bag with product through its opening at atmospheric pressure or higher, and
d) placing the closure head of the dispensing container, such that a hermetic seal is produced between the containing body and the bag.

[0020] Advantageously the step a) for extracting air from the leak-tight chamber is performed, either by means of pressure applied on the inside of the elastic bag, or by means of a vacuum pump connected to the hole of the air inlet valve.
[0021] In a third inventive aspect a cartridge for viscous products for dispensing containers is presented, comprising

- a bag with an inner face, an outer face, and an opening, suitable for containing a viscous product, and
- a closure head suitable for closing of a containing body, with an upper wall and a side flap, comprising a supply hole for supplying the product, with a product outlet valve, maintaining said product outlet valve a pressure for retaining the product towards the outside, and preventing the entrance of outer air into the container,

wherein,
the bag is an elastic bag hermetically attached by its opening to the inner area of the head where the upper wall and the side flap converge, forming the head and the elastic bag a leak-tight chamber.

[0022] All the features included in this document (including the claims, the description and the drawings) and/or all the steps of the method described can be combined in any way, with the exception of combinations of features and/or steps mutually excluding.

Description of the Drawings

[0023] To complement the description that will be made below and for the purpose of aiding to a better understand of the features of the invention, according to a preferred practical embodiment example thereof, is attached as an integral part of said description, a set of drawings in which with an illustrative and non- limiting character, the following has been depicted :

Figure 1 shows to the left a section view of a dispensing container according to a first embodiment of the invention, and to the right the same section view of the dispensing container with a longer elongation of the elastic bag.
Figure 2 shows a detailed view of the upper area of the dispensing container of the first embodiment of the invention.
Figure 3 shows a section view of a second embodiment of the invention, with the valve in the side wall of the containing body.
Figure 4 shows a section view of a second embodiment of the invention, with the valve in the lower wall of the containing body.
Figure 5A shows a detailed section view of an embodiment of the invention with the elastic bag, in a discontinuous line, before of its filling.
Figure 5B shows a detailed section view of an embodiment of the invention with the bag, in a solid line, fitted to the inner surface of the outlet valve of the closure head.
Figure 6 shows a detailed section view of an embodiment of the invention with an inner tubular projection located inside the elastic bag.
Figure 7A shows a section view of the cartridge for viscous products of the invention.
Figure 7B shows a section view of the cartridge for viscous products of the invention placed in a dispensing container.

Detailed Description of a Preferred Embodiment of the Invention

[0024] The drawings show a dispensing container for viscous products according to the invention. The dispensing container for viscous products comprises a containing body (1) comprising a flexible side wall (1.1) with an inner face and an outer face, a bottom wall (1.2) and a neck (1.3), a bag (2) with an inner face and an outer face and an opening (2.1), suitable for containing a viscous product (9), and arranged inside the containing body (1), and a closure head (4) of the containing body (1) comprising a supply hole (8) for supplying the product (9) in which a product outlet valve (8.1) is located, said valve preventing the entrance of outer air into the container.
[0025] The bag (2) is an elastic bag hermetically attached by its opening (2.1) to the area of the neck (1.3) of the containing body (1), forming a first leak-tight chamber (5) between the outer face of said elastic bag (2) and the inner face of the side wall (1.1) of the containing body (1). The head (4) and the elastic bag (2) in turn form a second leak-

tight chamber (6).

[0026] The containing body (1) comprises a hole (10) with an air inlet valve (10.1) suitable for allowing air flow only from outside the dispensing container towards the inside of the first leak-tight chamber (5) in response to a depression in said first leak-tight chamber (5).

[0027] The dispensing container, specifically the elastic bag (2), is capable of adapting its volume to the remaining product (9) at the time of exerting a compaction (or grouping) force on said product. The elastic bag (2) contracts, shrinks, or adjusts its volume to the volume of remaining product (9) due to the elastic force intrinsic to it.

[0028] In a first particular embodiment, as can be seen in Figures 1 and 2 the dispensing container comprises a hermetic connecting ring (3) interposed between the neck (1.3) and the closure head (4) of the containing body (1) and to which the elastic bag (2) is attached by its opening (2.1). As can be seen in Figure 2, this hermetic connecting ring (3) attaches the neck (1.3) of the containing body (1), the elastic bag (2) and the closure head (4).

[0029] Advantageously, as can also be seen in Figure 2, the hermetic connecting ring (3) comprises a through hole (11) aligned with the valve (10.1) placed in the closure head (4) of the containing body (1) to establish a passage channel for the air flow from outside the dispensing container towards the inside of the first leak-tight chamber (5) in response to a depression in said first leak-tight chamber (5).

[0030] Advantageously, the valve (10.1) is placed in the flexible side wall (1.1) or in the bottom wall (1.2) of the containing body (1).

[0031] Advantageously, the neck (1.3) has at least one perimeter rib (12) fitting in at least one receiving area (13') provided for such purpose in the inner face of the hermetic connecting ring (3), and the hermetic connecting ring (3) in turn has in its outer face (3.2) at least one perimeter rib (14) fitting in at least one receiving area (13) also provided for such purpose in the inner face of the head (4).

[0032] Advantageously, the hermetic connecting ring (3) comprises an upper wall (3.3) projecting inwardly, preferably perpendicular to the vertical wall (3.1), suitable for resting on the upper edge of the neck (1.3).

[0033] In a second embodiment, the elastic bag (2) is directly attached to the neck (1.3) of the containing body (1), achieving complete air-tightness between the elastic bag and the body of the container.

[0034] The elastic bag (2) is advantageously attached to the neck (1.3) of the containing body (1) by means of an elastic fit, as can be seen in Figures 3 to 6.

[0035] Advantageously, the neck (1.3) has at least one perimeter rib (12) fitting in at least one receiving area (13) provided for such purpose in the inner face of the head (4).

[0036] According to any of the embodiments described, the head (4) advantageously comprises a tubular projection (15) towards the inside that is located inside the elastic bag (2) through its opening (2.1). Said tubular projection (15) advantageously comprises at least one through hole.

[0037] The length of the tubular projection (15) is preferably equal to or slightly greater than half the length of the maximum extension of the elastic bag (2) inside the containing body (1).

[0038] With respect to a sac-type elastic bag geometry, said tubular projection (15) has the advantage of the elastic bag (2) adapting to the inner geometry of the tubular projection when emptying out the product, thereby allowing more product to be extracted from the device.

[0039] Again, according to any of the preceding embodiments, the outlet valve (8.1) is an anti-drip valve. Likewise, the valve (10.1) is advantageously a one-way valve or a valve with manual means, being a hole in this case that can be covered with one of the user's fingers when emptying out the product, and uncovered when pressure is no longer applied on the containing body (1), thereby allowing the entrance of air into the chamber (5) and with it the recovery to the initial shape of said containing body (1).

[0040] Finally, in any of the described embodiments the supply hole (8) for supplying product (9) advantageously has a frustoconical projection (8.2) towards the outside of the closure head (4), as can be seen in Figures 5A and 5B. Specifically, Figure 5A shows the elastic bag (2), marked in a discontinuous line, before filling, and Figure 5B shows the bag, marked in a solid line, fitted to the inner surface of the frustoconical projection (8.2) of the closure head (4). Fitting the bag to the inner surface of the projection (8.2) allows, where possible, extracting more product from inside the bag (2) of the container.

[0041] With respect to the second aspect of the invention, i.e., the method of filling the dispensing container according to any of the embodiments described, the method comprises the following steps:

a) extracting the air existing in the first leak-tight chamber (5) through the hole (10) of the valve (10.1) until reaching the maximum expansion provided for the elastic bag (2),

b) at the time of the maximum expansion provided for the elastic bag (2), placing the valve (10.1) and blocking it, such that it does not allow the passage of air in any direction, i.e., from the outer atmosphere into the leak-tight chamber (5), or vice versa,

c) filling the elastic bag (2) with product through its opening (2.1) at atmospheric pressure or higher, and finally,

d) placing the closure head (4) of the dispensing container such that a hermetic seal is produced between the

containing body (1) and the bag (2).

[0042] Advantageously, step a) for extracting air from the leak-tight chamber (5) is performed either by means of pressure applied on the inside of the elastic bag (2) or by means of a vacuum pump connected to the hole (10) of the valve (10.1).

[0043] The reverse process, i.e., emptying the dispensing container, is performed without keeping any valve blocked, the user's hand exerting pressure on the containing body, thereby creating a reduced volume of said containing body and thereby excess pressure in the chamber (5) created between the elastic bag (2) and the containing body (1). At the time when pressure is no longer exerted on the containing body (1), the latter will tend to recover its initial shape, creating a depression in said chamber, at which time it causes the valve (10.1) to open and the latter allows the entrance of outer air until the complete recovery of the shape of the containing body.

Test

[0044] The following test was conducted to demonstrate the strengths and features of the dispensing container of the invention.

[0045] Materials used:

Typical containing body (1) for food sauces with:

- 250 ml capacity,
- made of PET plastic,
- head (4), or lid, made of polypropylene with an anti-drip silicone valve (8.1).
- bag (2) made of elastic latex material.

[0046] The containing body (1) made of PET plastic was perforated in order to act as a one-way, manually operated valve (10.1). Said hole was blocked using fingers while pressing on the containing body (1) to extract the sauce, thereby preventing the entrance of air into the chamber (5) created between the bag (2) made of elastic material and the containing body (1), and the hole was unblocked when pressure ceased, said unblocked hole or valve (10.1) allowing the entrance of air into the chamber (5) created between the bag (2) made of elastic material and the containing body (1).

[0047] The latex bag (2) was 8 cm long and had a maximum outer diameter of 2 cm, and it was fitted to the neck (1.3) of the containing body (1) made of PET by a tight elastic fit.

[0048] Once the elastic bag (2) and the neck (1.3) of the containing body (1) were fitted, the elastic bag (2) was blown through its opening (2.1), coinciding at that time with the opening or neck (1.3) of the containing body (1), allowing the bag (2) to adapt to the inner faces of the flexible side wall (1.1) and bottom wall (1.2) of the containing body (1).

[0049] In the time of maximum elongation of the elastic bag (2) already adapted to the inner geometry of the containing body (1), the hole or valve (10.1) created on it was blocked such that the entrance of air into the chamber (5) existing between the containing body (1) and the elastic bag (2) was prevented. This chamber (5) is almost non-existent, optimally being a complete vacuum or quasi-vacuum when a complete vacuum cannot be achieved. By preventing the entrance of air through the hole or valve (10.1), the elastic bag (2) does not recover its initial shape because its intrinsic elastic force cannot overcome the vacuum formed between it and the containing body.

[0050] Therefore, with the bag completely adapted to the inner geometry of the containing body (1), it was filled with product (food sauce) at atmospheric pressure, and once it was filled, it was closed with the head (4) with an anti-drip silicone valve (8.1). Once the dispensing container was closed, the hole of the body was unblocked. At this time the system was ready to operate.

[0051] In order for the anti-drip silicone valve (8.1) to leave its rest state it is necessary to apply a force on it, working as a check valve and it must be capable of withstanding the force with which the elastic bag (2) drives the product. The force made by the elastic bag (2) must be less than the force required by the silicone valve (8.1) to leave its rest state and allow being opened for the product to come out. If the force of the elastic bag (2) were greater than the retaining force of the silicone valve (8.1), the product would come out of the dispensing container without requiring pressure on it.

[0052] Therefore, the condition is for the material to be an elastic material that exerts the least force on the packaged product; all that matters is that it can contract into the smallest amount of volume possible, because all the force exerted by this elastic material on the product must be stopped by the valve (8.1) arranged in the head or lid (4). To that end, elastic materials with an enormous stretching capability are ideally needed.

[0053] In this test, after the elastic bag (2) is fitted to the neck (1.3) of the containing body (1), it had an initial volume at rest (without being stretched) of 25 ml. The bag (2) was stretched until being adapted to the inner geometry of the containing body (1) and generating a dispensing container with an inner volume of 250 ml.

[0054] The product (sauce) was emptied out by exerting pressure with fingers on the flexible containing body (1) made

of plastic and blocking the created hole (10.1) with fingers at the time of exerting pressure on the containing body (1).

[0055] To calculate and compare the amount of product extracted from the dispensing container with an elastic bag (2) with respect to current containers marketed for sauces, successive weighings were performed. By knowing the weight of the different components and the weight of the amount of product introduced, the amount of remaining product that could not be extracted could be evaluated in every case. The weights of said components were as follows:

Description	Weight (g)
Containing body made of PET	20.5
Closure head with anti-drip silicone valve	9
Elastic bag	0.49

[0056] Therefore, the initial overall weight, i.e., packaged product (sauce) and dispensing container, was 290.97 g.

[0057] The obtained results are shown in the following table.

	Current system	Current system, strongly shaking and waiting during certain periods	System of the invention
Remaining product that cannot be extracted (g)	52.19	31.31	2
Remaining product that cannot be extracted (%)	20	12	0.7

[0058] Finally, in relation to the final aspect of the invention, the cartridge for viscous products, as can be seen in Figures 7A and 7B, is suitable for being placed in a dispensing container, such that it is intended for being sold or marketed separately and for being used as a refill for a dispensing container when its original amount of product runs out.

[0059] The cartridge (16) comprises a bag (2) and a closure head (4).

[0060] The bag (2) suitable for containing a viscous product has an inner face, an outer face, and an opening (2.1).

[0061] For its part, as can be seen in Figure 7B, the closure head (4) suitable for closing a containing body (1) has an upper wall (4.1) and a side flap (4.2) and comprises a supply hole (8) for the product (9) with a product outlet valve (8.1). Said product outlet valve (8.1) maintains pressure for retaining the product (9) towards the outside and prevents the entrance of outer air.

[0062] The bag (2) is elastic and is hermetically attached by its opening (2.1) to the inner area of the head (4) where the upper wall (4.1) and the side flap (4.2) converge, the head (4) and the elastic bag (2) forming a leak-tight chamber (6).

[0063] As can be seen, this cartridge is directly related to the dispensing container described above corresponding to the first aspect of the invention in that most of the features and elements constituting the cartridge are related to the elastic bag and the closure head of said dispensing container.

Claims

1. A dispensing container for viscous products comprising

- a containing body (1) comprising a flexible side wall (1.1) with an inner face and an outer face, a bottom wall (1.2) and a neck (1.3);
- a bag (2) with an inner face and an outer face and an opening (2.1), suitable for containing a viscous product (9), and arranged inside the containing body (1), and
- a closure head (4) of the containing body (1) comprising a supply hole (8) for the product (9), with a product outlet valve (8.1), said product outlet valve (8.1) maintaining pressure for retaining the product (9) towards the outside, and preventing the entrance of outer air into the container,

wherein

the bag (2) is an elastic bag hermetically attached by its opening (2.1) to the area of the neck (1.3) of the containing body (1), forming a first leak-tight chamber (5) between the outer face of said elastic bag (2) and the inner face of the side wall (1.1) of the containing body (1),

the head (4) and the elastic bag (2) form a second leak-tight chamber (6), and

the containing body (1) comprises a hole (10) with an air inlet valve (10.1) suitable for allowing air flow only

from outside the dispensing container towards the inside of the first leak-tight chamber (5) in response to a depression in said first leak-tight chamber (5).

2. The dispensing container for viscous products according to claim 1, **characterized in that** the elastic bag (2) is directly attached to the neck (1.3) of the containing body (1).

3. The dispensing container for viscous products according to claim 1, **characterized in that** it comprises a hermetic connecting ring (3) interposed between the neck (1.3) and the closure head (4) of the containing body (1) and to which the elastic bag (2) is attached by its opening (2.1).

4. The dispensing container for viscous products according to claim 2, **characterized in that** the elastic bag (2) is attached to the neck (1.3) of the containing body (1) by means of an elastic fit.

5. The dispensing container for viscous products according to claim 3, **characterized in that**
the hermetic connecting ring (3) comprises a through hole (11), and
the valve (10) is placed in the closure head (4) of the containing body (1),
the through hole (11) and the valve (10.1) being aligned to establish a passage channel for the air flow from outside the dispensing container towards the inside of the first leak-tight chamber (5) in response to a depression in said first leak-tight chamber (5).

6. The dispensing container for viscous products according to claim 3, **characterized in that** the valve (10) is placed in the flexible side wall (1.1) or in the bottom wall (1.2) of the containing body (1).

7. The dispensing container for viscous products according to any of claims 2 or 4, **characterized in that** the neck (1.3) has at least one perimeter rib (12) fitting in at least one receiving area (13) provided in the inner face of the head (4).

8. The dispensing container for viscous products according to any of claims 3 or 5, **characterized in that**
the neck (1.3) has at least one perimeter rib (12) fitting in at least one receiving area (13') provided in the inner face of the hermetic connecting ring (3), and
the hermetic connecting ring (3) has in its outer face (3.2) at least one perimeter rib (14) fitting in at least one receiving area (13) provided in the inner face of the head (4).

9. The dispensing container for viscous products according to any of claims 3, 5 or 8, **characterized in that** the hermetic connecting ring (3) comprises an upper wall (3.3) projecting inwardly, suitable for resting on the upper edge of the neck (1.3).

10. The dispensing container for viscous products according to any of the preceding claims, **characterized in that** the head (4) comprises a tubular projection (15) towards the inside located inside the opening (2.1) of the elastic bag (2).

11. The dispensing container for viscous products according to claim 10, **characterized in that** the tubular projection (15) comprises at least one through hole.

12. The dispensing container for viscous products according to any of claims 10 or 11, **characterized in that** the length of the tubular projection (15) is equal to or slightly greater than half the length of the maximum extension of the elastic bag (2) inside the containing body (1).

13. The dispensing container according to any of the preceding claims, **characterized in that** the outlet valve (8.1) is an anti-drip valve.

14. The dispensing container according to any of the preceding claims, **characterized in that** the valve (10.1) is a one-way valve or a valve with manual means.

15. The dispensing container according to any of the preceding claims, **characterized in that** the elastic bag (2) is made of an elastomeric material selected from elastomers based on polyisoprene, latex, thermoplastic elastomers, special synthetic elastomers, or silicone elastomers.

16. The dispensing container according to any of claims 1 to 14, **characterized in that** the elastic bag is made of a

material selected from thermoplastic polyurethanes, polybutadiene, natural rubber, synthetic rubber, chloroprene or vinyl.

17. A method of filling the dispensing container according to any of claims 1 to 14, **characterized in that** it comprises the following steps:

a) extracting the air existing in the first leak-tight chamber (5) through the hole (10) of the air inlet valve (10.1) until reaching the maximum expansion provided for the elastic bag (2),
b) placing the air inlet valve (10.1) and blocking it, such that it does not allow the passage of air in any direction from the outer atmosphere into the leak-tight chamber (5),
c) filling the elastic bag (2) with product through its opening (2.1) at atmospheric pressure or higher, and
d) placing the closure head (4) of the dispensing container such that a hermetic seal is produced between the containing body (1) and the bag (2).

18. The method of filling the dispensing container according to claim 15, **characterized in that** step a) for extracting air from the leak-tight chamber (5) is performed either by means of pressure applied on the inside of the elastic bag (2) or by means of a vacuum pump connected to the hole (10) of the valve (10.1).

19. A cartridge (16) for viscous products for dispensing containers comprising

- a bag (2) with an inner face, an outer face, and an opening (2.1), suitable for containing a viscous product (9), and
- a closure head (4) suitable for closing a containing body (1), with an upper wall (4.1) and a side flap (4.2), comprising a supply hole (8) for supplying the product (9), with a product outlet valve (8.1), said product outlet valve (8.1) maintaining pressure for retaining the product (9) towards the outside and preventing the entrance of outer air into the container, wherein,

the bag (2) is an elastic bag hermetically attached by its opening (2.1) to the inner area of the head (4) where the upper wall (4.1) and the side flap (4.2) converge, the head (4) and the elastic bag (2) forming a leak-tight chamber (6).

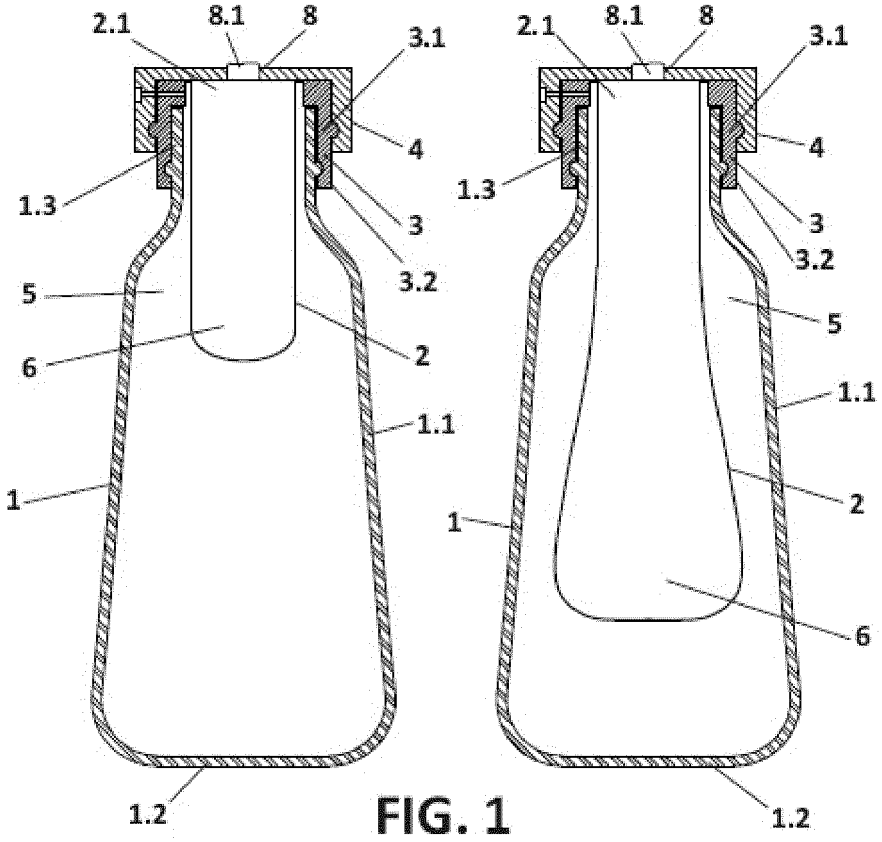
2.1
8.1
8
3.1
4
1.3
3
3.2
5
6
2
1.1
1
1.2
2.1
8.1
8
3.1
4
1.3
3
3.2
5
1.1
2
1
6
1.2

FIG. 1

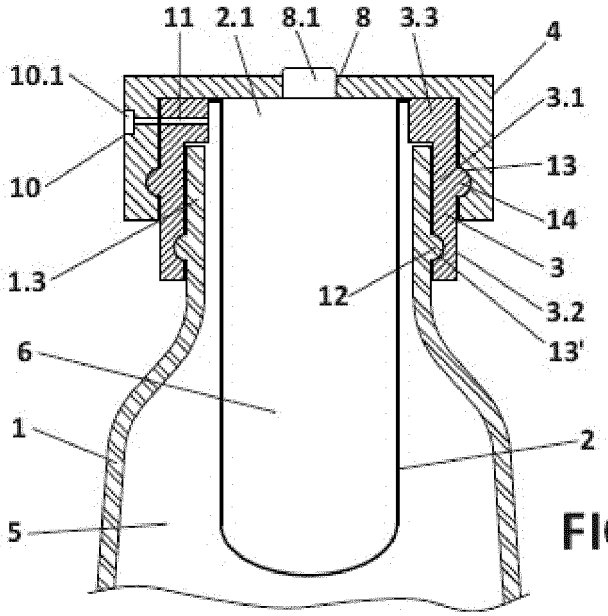
11
2.1
8.1
8
3.3
4
10.1
3.1
13
10
14
1.3
3
12
3.2
13'
6
1
2
5

FIG. 2

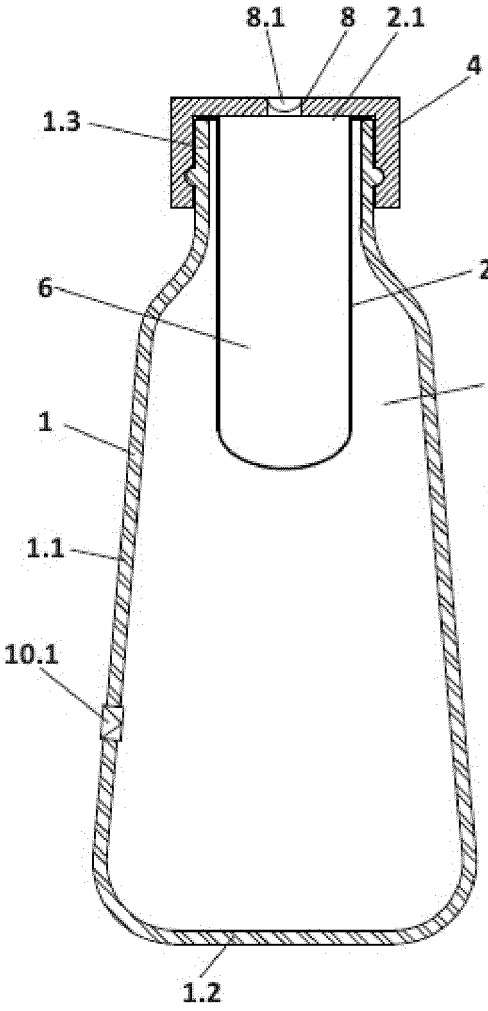

FIG. 3

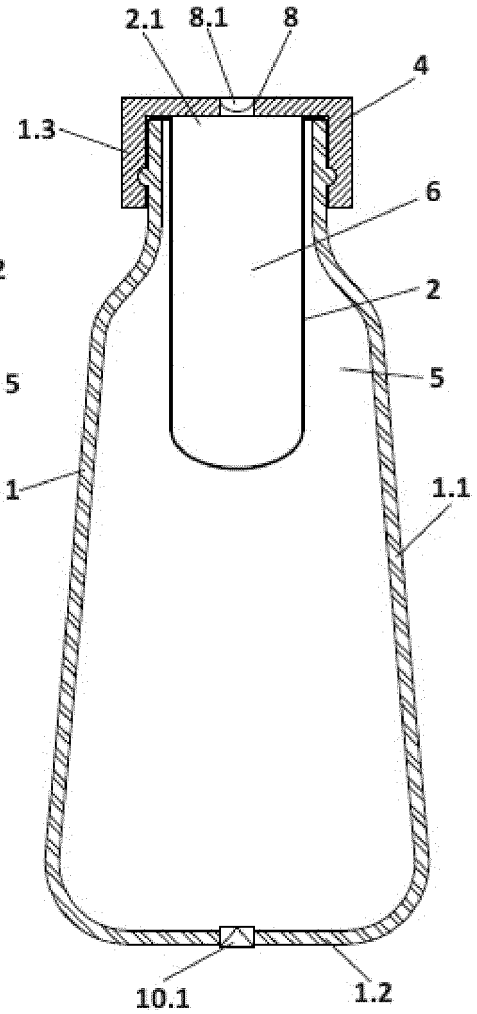

FIG. 4

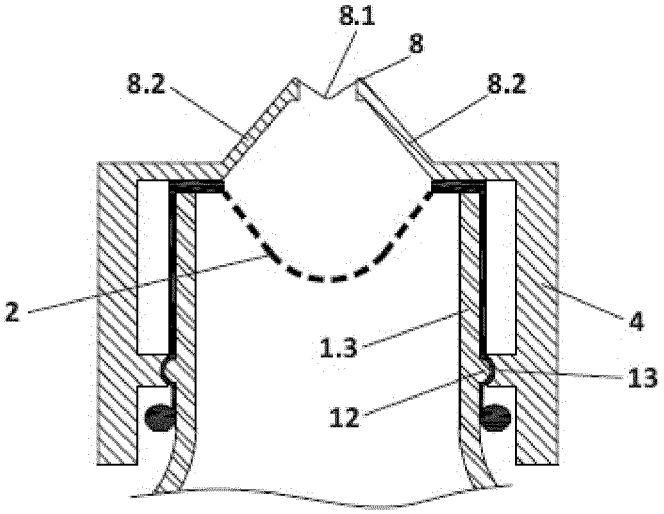

FIG. 5A

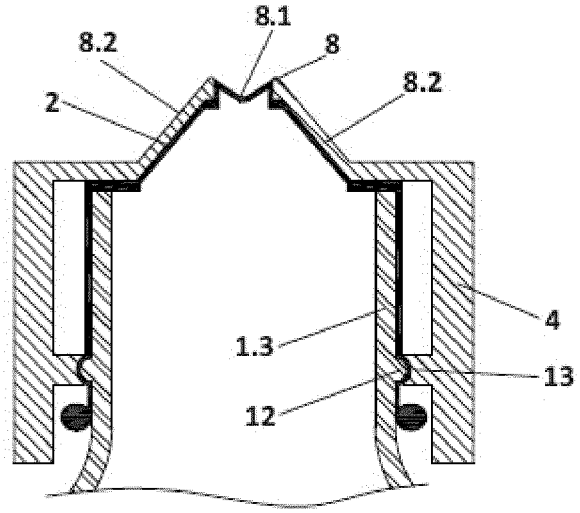

FIG. 5B

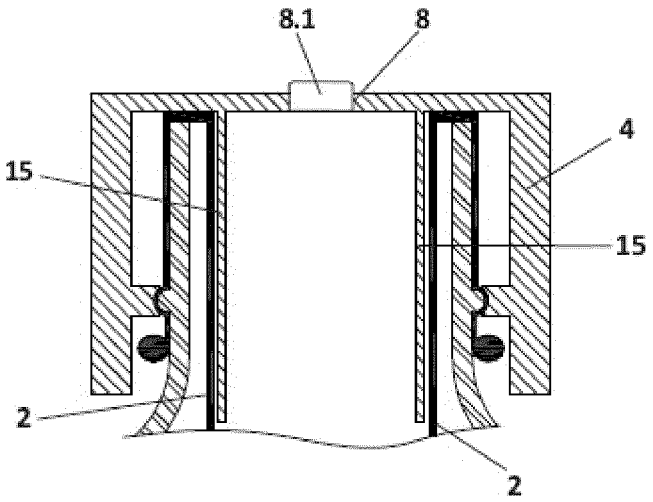

FIG. 6

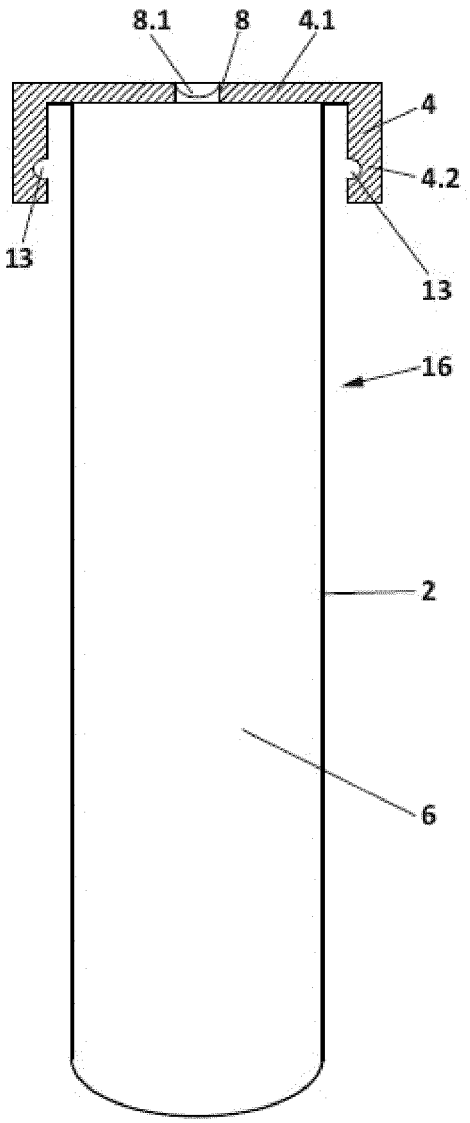

FIG. 7A

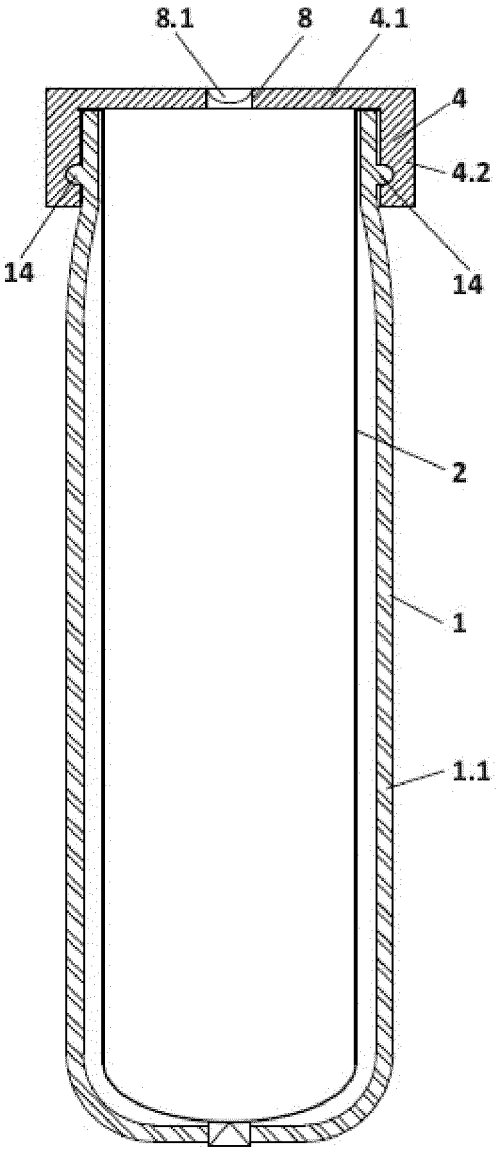

FIG. 7B

Europäisches Patentamt
European Patent Office
Office européen des brevets

EUROPEAN SEARCH REPORT

Application Number
EP 13 38 2312

DOCUMENTS CONSIDERED TO BE RELEVANT

Category	Citation of document with indication, where appropriate, of relevant passages	Relevant to claim	CLASSIFICATION OF THE APPLICATION (IPC)
X Y	US 2007/231622 A1 (KOZU KATSUMI [JP]) 4 October 2007 (2007-10-04) * paragraph [0025] - paragraph [0028]; figure 1A * -----	1,3,4,6, 14,19 2,5	INV. B65D83/00
Y	WO 2013/021802 A1 (KIKKOMAN CORP [JP]; KUWAGAKI DENMI [JP]; FUKUMOTO MASASHI [JP]) 14 February 2013 (2013-02-14) * paragraph [0021]; figure 2 * -----	2	
Y	EP 1 459 996 A1 (YOSHINO KOGYOSHO CO LTD [JP]) 22 September 2004 (2004-09-22) * paragraph [0048]; figure 3 * -----	5	

TECHNICAL FIELDS SEARCHED (IPC)

B65D

1 ~~The present search report has been drawn up for all claims~~

Place of search	Date of completion of the search	Examiner
Munich	4 December 2013	Vesterholm, Mika

CATEGORY OF CITED DOCUMENTS

X : particularly relevant if taken alone
Y : particularly relevant if combined with another document of the same category
A : technological background
O : non-written disclosure
P : intermediate document

T : theory or principle underlying the invention
E : earlier patent document, but published on, or after the filing date
D : document cited in the application
L : document cited for other reasons
.....
& : member of the same patent family, corresponding document

EPO FORM 1503 03.82 (P04C01)

Europäisches Patentamt
European Patent Office
Office européen des brevets

Application Number
EP 13 38 2312

CLAIMS INCURRING FEES

The present European patent application comprised at the time of filing claims for which payment was due.

☐ Only part of the claims have been paid within the prescribed time limit. The present European search report has been drawn up for those claims for which no payment was due and for those claims for which claims fees have been paid, namely claim(s):

☐ No claims fees have been paid within the prescribed time limit. The present European search report has been drawn up for those claims for which no payment was due.

LACK OF UNITY OF INVENTION

The Search Division considers that the present European patent application does not comply with the requirements of unity of invention and relates to several inventions or groups of inventions, namely:

see sheet B

☐ All further search fees have been paid within the fixed time limit. The present European search report has been drawn up for all claims.

☐ As all searchable claims could be searched without effort justifying an additional fee, the Search Division did not invite payment of any additional fee.

☐ Only part of the further search fees have been paid within the fixed time limit. The present European search report has been drawn up for those parts of the European patent application which relate to the inventions in respect of which search fees have been paid, namely claims:

☒ None of the further search fees have been paid within the fixed time limit. The present European search report has been drawn up for those parts of the European patent application which relate to the invention first mentioned in the claims, namely claims:

1-6, 14, 19

☐ The present supplementary European search report has been drawn up for those parts of the European patent application which relate to the invention first mentioned in the claims (Rule 164 (1) EPC).

Europäisches Patentamt
European Patent Office
Office européen des brevets

LACK OF UNITY OF INVENTION
SHEET B

Application Number
EP 13 38 2312

The Search Division considers that the present European patent application does not comply with the requirements of unity of invention and relates to several inventions or groups of inventions, namely:

1. claims: 1-6, 14, 19

   How to connect a flexible bag to a containing body

   ---

2. claims: 7-9

   How to maintain the bag in its position

   ---

3. claims: 10-12

   How to prevent the closing of the elastic bag

   ---

4. claim: 13

   How to prevent dripping of the contents

   ---

5. claims: 15, 16

   How to enable large deformations

   ---

6. claims: 17, 18

   How to fill a container

ANNEX TO THE EUROPEAN SEARCH REPORT ON EUROPEAN PATENT APPLICATION NO. EP 13 38 2312

This annex lists the patent family members relating to the patent documents cited in the above-mentioned European search report.
The members are as contained in the European Patent Office EDP file on
The European Patent Office is in no way liable for these particulars which are merely given for the purpose of information.

04-12-2013

Patent document cited in search report	Publication date	Patent family member(s)	Publication date
US 2007231622 A1	04-10-2007	CN 101026245 A	29-08-2007
		JP 2007227092 A	06-09-2007
		KR 20070085130 A	27-08-2007
		US 2007231622 A1	04-10-2007
WO 2013021802 A1	14-02-2013	JP 2013035557 A	21-02-2013
		TW 201313561 A	01-04-2013
		WO 2013021802 A1	14-02-2013
EP 1459996 A1	22-09-2004	AU 2002349635 A1	10-06-2003
		EP 1459996 A1	22-09-2004
		JP 3938300 B2	27-06-2007
		JP 2003165554 A	10-06-2003
		US 2004217128 A1	04-11-2004
		WO 03045804 A1	05-06-2003

EPO FORM P0459

For more details about this annex : see Official Journal of the European Patent Office, No. 12/82

REFERENCES CITED IN THE DESCRIPTION

This list of references cited by the applicant is for the reader's convenience only. It does not form part of the European patent document. Even though great care has been taken in compiling the references, errors or omissions cannot be excluded and the EPO disclaims all liability in this regard.

Patent documents cited in the description

- FR 2800718 **[0004]**
- EP 505611 A **[0005] [0006]**
- ES 2346054 **[0006]**