(19) Europäisches Patentamt
European Patent Office
Office européen des brevets

(11) EP 2 835 069 A1

(12) EUROPEAN PATENT APPLICATION

(43) Date of publication:
11.02.2015 Bulletin 2015/07

(21) Application number: **14180171.2**

(22) Date of filing: **07.08.2014**

(51) Int Cl.:
A42B 3/12 *(2006.01)* ***A42C 2/00*** *(2006.01)*
A41D 13/015 *(2006.01)*

(84) Designated Contracting States:
AL AT BE BG CH CY CZ DE DK EE ES FI FR GB GR HR HU IE IS IT LI LT LU LV MC MK MT NL NO PL PT RO RS SE SI SK SM TR
Designated Extension States:
BA ME

(30) Priority: **09.08.2013 IT PD20130233**

(71) Applicant: **Teca25 S.r.l.**
36015 Schio (VI) (IT)

(72) Inventor: **Dall'Oglio, Alberto**
36030 CALTRANO VI (IT)

(74) Representative: **Modiano, Micaela Nadia et al**
Modiano & Partners (IT)
Via Meravigli, 16
20123 Milano (IT)

(54) Method for providing a padded lining, particularly for crash helmets, and padded lining provided with the method

(57) A method for providing a padded lining (10), particularly for crash helmets (21), and a padded lining (10) obtained by means of the method. The method comprises the high-frequency heat-sealing, in a mold (13), of a sheet of plastic material (11) with fabric (17) at unpadded regions (16) interleaved with padded regions (20), wherein padding elements (14) are interposed between the sheet of plastic (11) and the fabric (17).

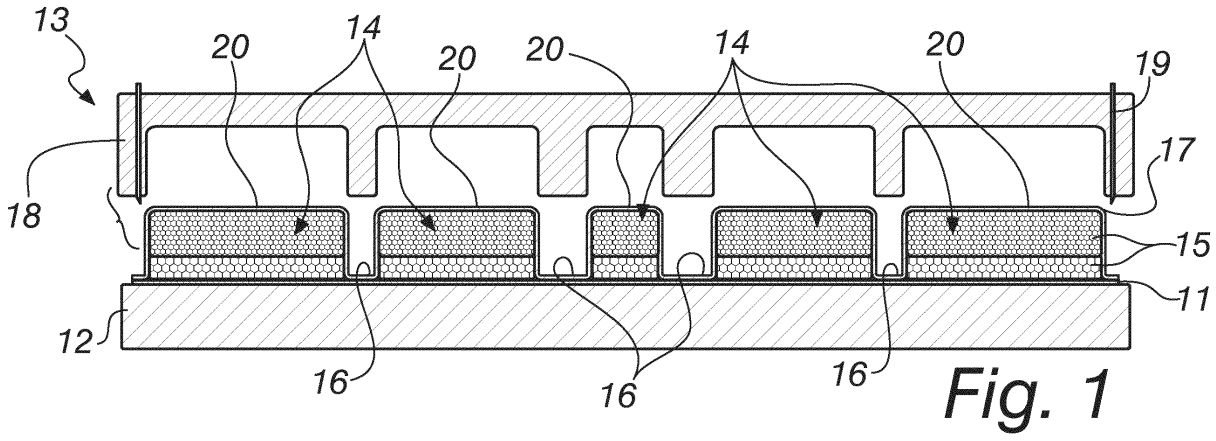

Fig. 1

EP 2 835 069 A1

Description

[0001] The present invention relates to a method for providing a padded lining, particularly for crash helmets, and to a padded lining provided with the method.

[0002] Currently, the internal lining of crash helmets, conveniently provided with comfort padding, is substantially handmade and is sewn and assembled by hand.

[0003] The padded lining comprises different parts, such as for example the bottom, the right and left sides, and the collar, the manufacture of which requires sewing steps.

[0004] Each part is provided by means of a paper pattern on which the various fabrics and materials that compose it are modeled and can be composed of a base or an internal layer made of polypropylene or polyvinyl chloride, by terry, by fabrics optionally laminated beforehand with the terry and by accessories such as buttons, rivets, tapes, et cetera.

[0005] The fabrics are coupled to various types of terry by lamination, while an optional internal layer made of polypropylene or polyvinyl chloride is glued to the terries, for example to stiffen the structure, by means of glues, adhesive tapes and/or other solvents suitable for adhesive bonding.

[0006] Such materials are cut and then assembled, creating significant problems during sewing, due to the difficulty of joining many small parts by sewing and of tensioning at the same time the fabrics so that they are coupled in an optimum manner in order to give each part the desired shape.

[0007] An almost entirely handcrafted manufacture of the parts entails long manufacturing times, imperfections, esthetic limitations and high development and production costs.

[0008] In addition, there are difficulties arising from the many treatments of the materials prior to the assembly step and from the need to change model for each crash helmet size.

[0009] Moreover, for new products, for which there is no previous production experience, repeatability is poor, due to the number of fabrics and materials that compose them and also due to the many manual processes that it undergoes, i.e., the already-mentioned gluing, cutting, assembly and sewing.

[0010] The aim of the present invention is to propose a method for providing padded linings, particularly internal parts of crash helmets, that is simpler and faster than the handcrafted method currently used, reducing overall manufacturing costs.

[0011] Within this aim, an object of the invention is to propose a method that can ensure a high degree of reproducibility of the padded lining and higher precision and therefore also improved esthetics.

[0012] Another object of the invention is to limit human interventions in production and to reduce waste material.

[0013] Another object of the invention is to provide a padded lining that is comfortable and offers high performance, is structurally simple and is easily reproducible.

[0014] This aim, as well as these and other objects that will become better apparent hereinafter, are achieved by a method for providing a padded lining, particularly for crash helmets, which consists in:

- superimposing a sheet of plastic material on the surface of a first part of a mold,
- placing on said sheet of plastic material at least one pre-contoured padding element,
- superimposing at least one fabric on said at least one padding element and on regions of said sheet of plastic material that are not covered by said at least one padding element, termed unpadded regions,
- closing said mold with a second mold part that is shaped substantially complementarily to said at least one padding element,
- performing a high-frequency heat-sealing, in said mold, of said fabric with said sheet of plastic material at said unpadded regions.

[0015] The present invention also relates to a padded lining, provided by means of the method described above, characterized in that it comprises said sheet of plastic material and at least one fabric, between which padding elements are interposed so as to provide padded regions interleaved with said unpadded regions, in which said fabric and said sheet of plastic material are coupled.

[0016] Further characteristics and advantages of the invention will become better apparent from the description of a preferred but not exclusive embodiment of the method and of the padded lining according to the invention, illustrated by way of non-limiting example in the accompanying drawings, wherein:

Figure 1 is a sectional view of a step of the method according to the invention, with the mold and the materials placed therein;

Figure 2 is a partially sectional exploded perspective view of an example of padded lining according to the invention;

Figure 3 is another perspective view of the same padded lining as the preceding figure, in the assembled condition;

Figure 4 is a crash helmet that is lined internally with padded linings according to the invention.

[0017] With reference to the figures, the method according to the invention allows to provide a padded lining 10 by means of a series of steps.

[0018] A first step of the method consists in superimposing a sheet of plastic material 11, for example made of polyvinyl chloride, polypropylene or polyethylene terephthalate, on the surface of a first part 12 of a mold 13, which in the illustrated case is planar.

[0019] In the second step, padding elements 14 that are pre-contoured, since they are pre-cut according to

the desired shapes, are placed on the sheet 11 of plastic material.

[0020] The padding elements 14 can be constituted by one or more superimposed padding layers 15, preferably made of terry of different softness and with different inherent characteristics (for example antibacterial, temperature-regulating or sound-absorbing), depending on the requirements.

[0021] The regions of the sheet of plastic material 11 that are not covered by the padding elements 14 are designated, in Figure 1 and in the subsequent figures, by the reference numeral 16 and are referenced herein simply as unpadded regions.

[0022] A fabric 17 is superimposed on the padding elements 14 and on the unpadded regions 16.

[0023] What has already been described of the method is shown by the first figure, which shows a sectional view of the mold and of the elements that are positioned and superimposed therein.

[0024] The mold 13 is then closed with a second mold part 18 that is shaped substantially complementarily to the padding elements 14 and therefore to the desired final shape for the padded lining 10.

[0025] Finally, the fabric 17 is heat-sealed at high frequency with the sheet of plastic material 11 in the mold 13 at the unpadded regions 16, which are interposed between the two mold parts.

[0026] The article obtained from the step of high-frequency heat-sealing is blanked conveniently according to the outer perimeter of the padded lining 10 or so as to create openings at the unpadded regions 16 due to constructive requirements (for example the need to associate a strap with the lining) or can be perforated at the vapor-permeable portions.

[0027] The second mold part 18 can be provided conveniently with a diecutter 19, shown in Figure 1, which by descending onto the first mold part 12 cuts the article once heat-sealing has been completed.

[0028] The example of padded lining 10 described here is a liner for a motorcycling helmet.

[0029] As is evident from the first two figures, it is constituted by the sheet 11 made of plastic material and by the fabric 17, between which padding elements 14 are interposed which in some cases comprise two superimposed layers preferably made of terry.

[0030] The padding elements 14 define padded regions 20 interleaved by unpadded regions 16, in which the fabric 17 and the sheet of plastic material 11 are coupled by heat-sealing.

[0031] The assembled finished product is shown in Figure 3.

[0032] The helmet 21 shown in Figure 4 is lined internally with multiple padded linings 10 that are mutually assembled and have different shapes because they constitute various parts of the helmet interior, such as the liner 22 or the side pads 23.

[0033] It should be noted that the described method does not provide for the sewing of the parts and that the final shape of the product depends exclusively on the initial design, in which the equipment is also designed, said equipment being advantageously reusable to manufacture other similar padded linings 10.

[0034] In practice it has been found that the invention achieves the intended aim and objects, proposing an industrial method that allows to manufacture padded linings with a high level of reproducibility and precision, in a short time and with lower costs than known manual methods.

[0035] Moreover, an automated process allows to reduce the waste material and the mistakes on the final product.

[0036] Another advantage of the method according to the invention is that it can be used in the production of padded linings for crash helmets of different sizes by using the same mold: the size, in fact, can be changed easily by changing the thickness of the paddings and therefore of the padding elements.

[0037] Another advantage arises from the fact that the proposed product is comfortable and offers high performance thanks to the fact that solvents and adhesives, which would limit its vapor permeability, are not used in the process.

[0038] Although the method according to the invention has been conceived particularly to provide padded linings for crash helmets, it can in any case be applied in the production of padded linings intended for other products that must have high performance characteristics.

[0039] The invention thus conceived is susceptible of numerous modifications and variations, all of which are within the scope of the appended claims; all the details may further be replaced with other technically equivalent elements.

[0040] In practice, the materials used, so long as they are compatible with the specific use, as well as the contingent shapes and dimensions, may be any according to requirements and to the state of the art.

[0041] The disclosures in Italian Patent Application no. PD2013A000233, from which this application claims priority, are incorporated herein by reference.

[0042] Where technical features mentioned in any claim are followed by reference signs, those reference signs have been included for the sole purpose of increasing the intelligibility of the claims and accordingly such reference signs do not have any limiting effect on the interpretation of each element identified by way of example by such reference signs.

Claims

1. A method for providing a padded lining (10), particularly for crash helmets (21), which consists in:

   - superimposing a sheet of plastic material (11) on the surface of a first part (12) of a mold (13),
   - placing at least one pre-contoured padding el-

ement (14) on said sheet of plastic material (11),
- superimposing at least one fabric (17) on said at least one padding element (14) and on regions of said sheet of plastic material (11) that are not covered by said at least one padding element (14), termed unpadded regions (16),
- closing said mold (13) with a second mold part (18) that is shaped substantially complementarily to said at least one padding element (14),
- performing a high-frequency heat-sealing, in said mold (13), of said fabric (17) with said sheet of plastic material (11) at said unpadded regions (16).

2. The method according to claim 1, **characterized in that** it comprises the blanking of the article obtained from high-frequency heat-sealing along the outer perimeter of said padded lining (10) or so as to create openings at said unpadded regions (16).

3. A padded lining (10), provided with the method according to one or more of the preceding claims, **characterized in that** it comprises said sheet of plastic material (11) and at least one fabric (17) between which padding elements (14) are interposed so as to define padded regions (20) interleaved with said unpadded regions (16) in which said fabric (17) and said sheet of plastic material (11) are coupled by heat-sealing.

4. The padded lining according to claim 3, **characterized in that** said padding elements (14) comprise at least one padding layer (15).

5. The padded lining according to claim 3, **characterized in that** said padding elements (14) comprise at least two superimposed padding layers (15).

6. The padded lining according to one or more of the preceding claims, **characterized in that** said padding layer (15) is made of terry.

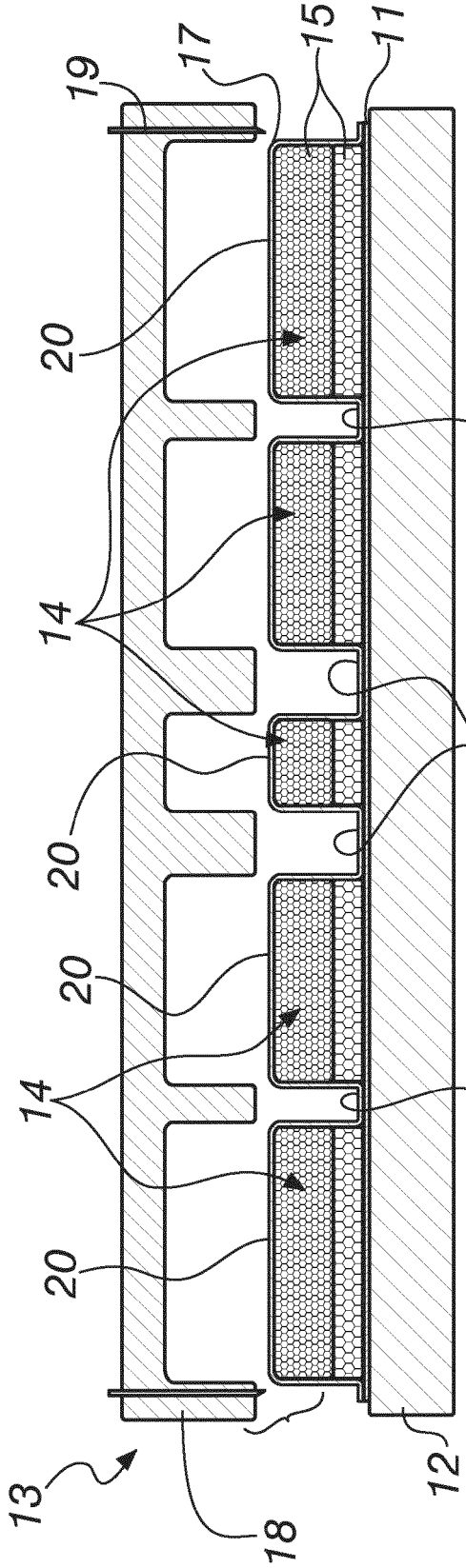

Fig. 1

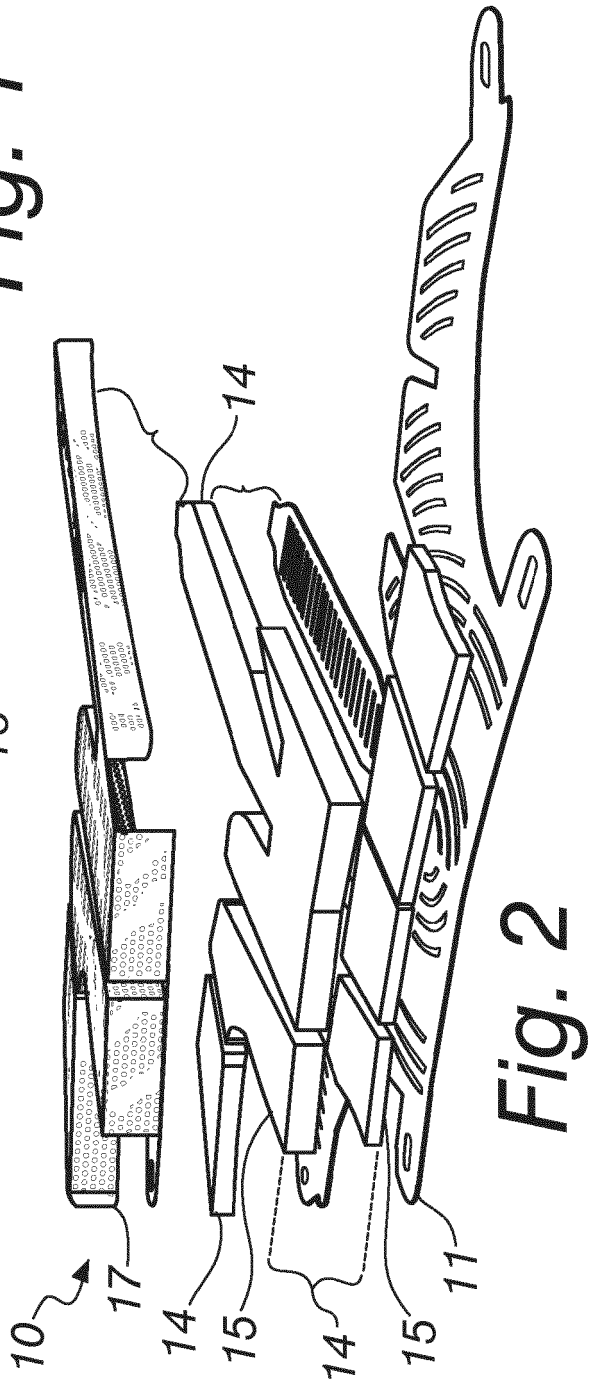

Fig. 2

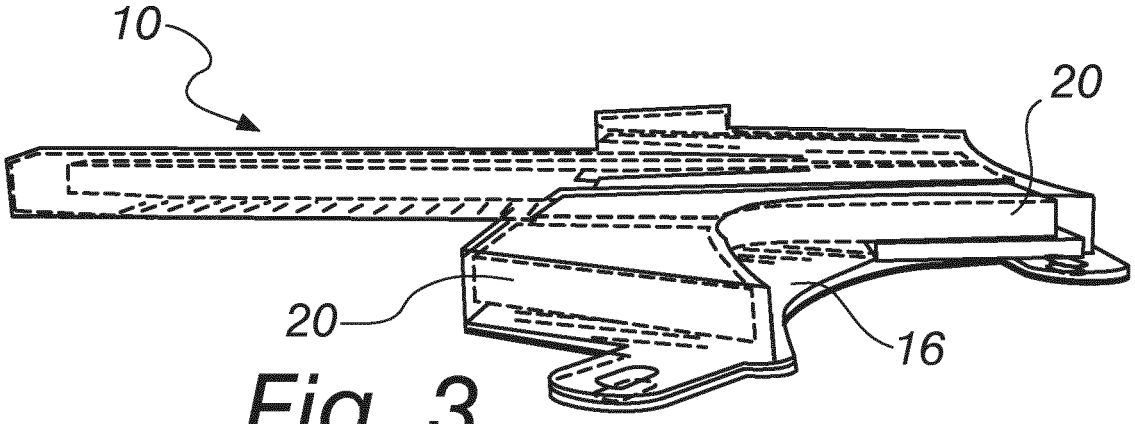

Fig. 3

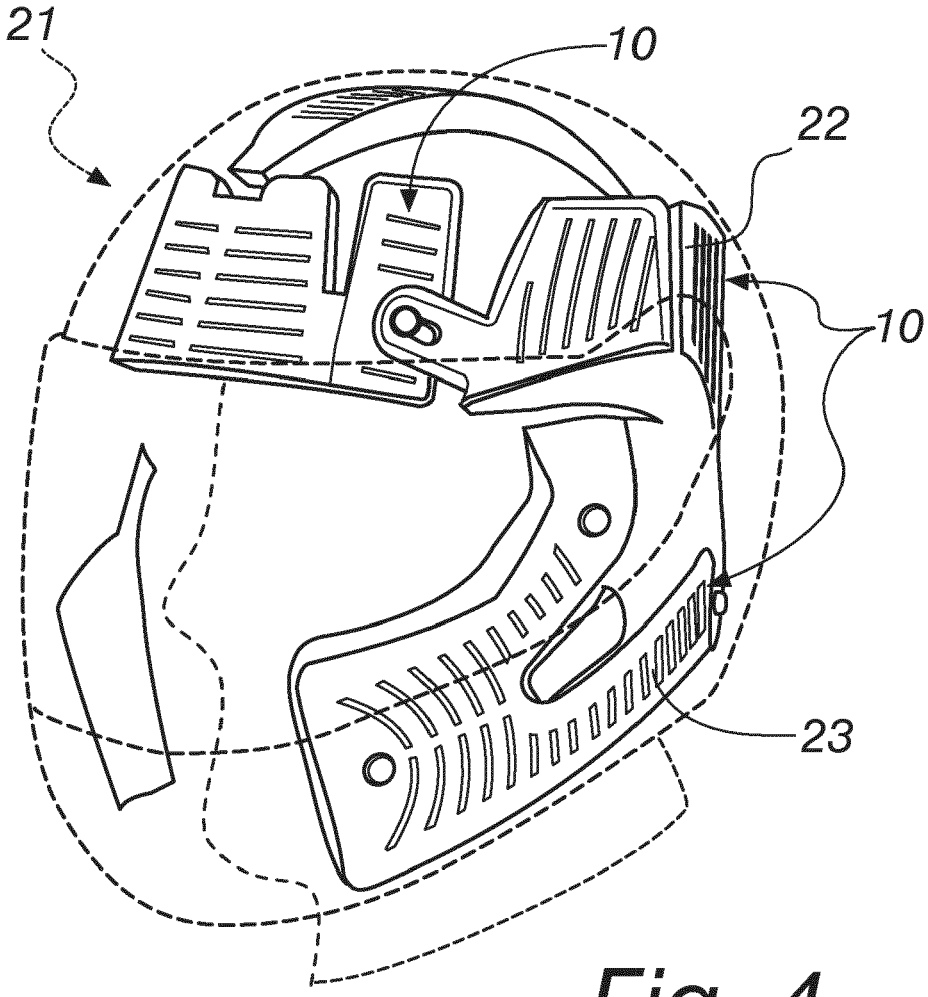

Fig. 4

Europäisches Patentamt
European Patent Office
Office européen des brevets

EUROPEAN SEARCH REPORT

Application Number
EP 14 18 0171

DOCUMENTS CONSIDERED TO BE RELEVANT

Category	Citation of document with indication, where appropriate, of relevant passages	Relevant to claim	CLASSIFICATION OF THE APPLICATION (IPC)
X	US 2007/192943 A1 (MCDUFF RODRIGUE [CA]) 23 August 2007 (2007-08-23) * paragraphs [0026] - [0037]; figures 3,4 *	1,3,4,6	INV. A42B3/12 A42C2/00 A41D13/015
X	US 2006/260026 A1 (DORIA MASON T [US] ET AL) 23 November 2006 (2006-11-23) * paragraphs [0037], [0038] *	1,3-6	
X	US 3 471 865 A (MOLITORIS STEPHEN J) 14 October 1969 (1969-10-14) * column 2, line 47 - column 3, line 8 *	1,3-6	
X	US 4 023 213 A (ROVANI WILLIAM) 17 May 1977 (1977-05-17) * column 2, line 65 - column 3, line 33 *	1-4,6	
X	US 3 596 288 A (MARCHELLO JOHN L) 3 August 1971 (1971-08-03) * column 2, lines 47-71; figures 7,8 *	1-4,6	

TECHNICAL FIELDS SEARCHED (IPC)

A42B
A42C
A41D

The present search report has been drawn up for all claims

Place of search	Date of completion of the search	Examiner
The Hague	17 December 2014	D'Souza, Jennifer

CATEGORY OF CITED DOCUMENTS

X : particularly relevant if taken alone
Y : particularly relevant if combined with another document of the same category
A : technological background
O : non-written disclosure
P : intermediate document

T : theory or principle underlying the invention
E : earlier patent document, but published on, or after the filing date
D : document cited in the application
L : document cited for other reasons

& : member of the same patent family, corresponding document

EPO FORM 1503 03.82 (P04C01)

ANNEX TO THE EUROPEAN SEARCH REPORT ON EUROPEAN PATENT APPLICATION NO. EP 14 18 0171

This annex lists the patent family members relating to the patent documents cited in the above-mentioned European search report. The members are as contained in the European Patent Office EDP file on
The European Patent Office is in no way liable for these particulars which are merely given for the purpose of information.

17-12-2014

Patent document cited in search report	Publication date	Patent family member(s)	Publication date
US 2007192943 A1	23-08-2007	CA 2574151 A1	17-07-2007
		US 2007192943 A1	23-08-2007
US 2006260026 A1	23-11-2006	AT 484205 T	15-10-2010
		AU 2006297880 A1	12-04-2007
		CA 2608994 A1	12-04-2007
		EP 1906779 A2	09-04-2008
		ES 2354571 T3	16-03-2011
		US 2006260026 A1	23-11-2006
		WO 2007040604 A2	12-04-2007
US 3471865 A	14-10-1969	NONE	
US 4023213 A	17-05-1977	NONE	
US 3596288 A	03-08-1971	JP S494493 B1	01-02-1974
		US 3596288 A	03-08-1971

EPO FORM P0459

For more details about this annex : see Official Journal of the European Patent Office, No. 12/82

REFERENCES CITED IN THE DESCRIPTION

This list of references cited by the applicant is for the reader's convenience only. It does not form part of the European patent document. Even though great care has been taken in compiling the references, errors or omissions cannot be excluded and the EPO disclaims all liability in this regard.

Patent documents cited in the description

- IT PD20130233 A **[0041]**