(19) Europäisches Patentamt
European Patent Office
Office européen des brevets

(11) **EP 2 835 479 A1**

(12) **EUROPEAN PATENT APPLICATION**

(43) Date of publication:
11.02.2015 Bulletin 2015/07

(51) Int Cl.:
E05B 15/02 *(2006.01)* ***A47G 29/20*** *(2006.01)*

(21) Application number: **13180000.5**

(22) Date of filing: **09.08.2013**

(84) Designated Contracting States:
AL AT BE BG CH CY CZ DE DK EE ES FI FR GB GR HR HU IE IS IT LI LT LU LV MC MK MT NL NO PL PT RO RS SE SI SK SM TR
Designated Extension States:
BA ME

(71) Applicant: **Cottner Technologies Limited**
Limerick (IE)

(72) Inventors:
- **Ryan, Liam Anthony**
  Co. Clare (IE)
- **Curran, John Gerard**
  Co. Clare (IE)
- **Edmonds, Edward Joseph**
  Co. Limerick (IE)

(74) Representative: **Skrba, Sinéad et al**
Tomkins & Co.
5 Dartmouth Road
Dublin 6 (IE)

(54) **Locker for a delivery or collection system**

(57) A locking mechanism for an access panel of a storage locker comprising:
a receiver plate and a lock bolt moveable between an extended position and a retracted position, the receiver plate further comprising a planar member having a recess therein for engaging the extended lock bolt in the locked position; and
wherein the locking mechanism further comprises a stop member mounted on the receiver plate and slideable between a second position proximal to the recess and a first position overlying the recess and wherein the stop member is arranged to cooperate with the lock bolt to slide the stop member from the first position to the second position.

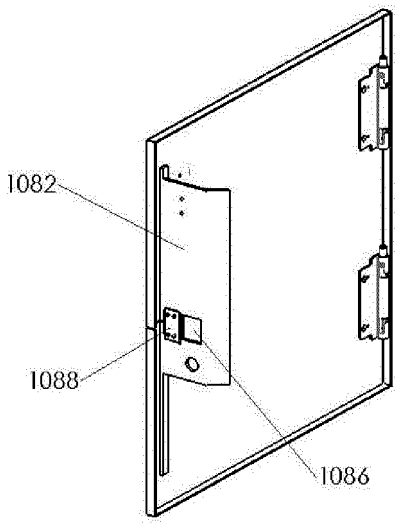

Figure 10

EP 2 835 479 A1

Description

Field of the Invention

[0001] The invention relates to a locker for a delivery or collection system.

Background to the Invention

[0002] The increasing use of catalogue, mail order and internet shopping has seen a corresponding increase in the use of delivery services. Large quantities of goods are now bought 'on-line' or via other communications means, with the supplier or purchaser normally engaging a delivery service for the purposes of transporting the goods to the purchaser.

[0003] It is desirable to provide a clean, secure and dry delivery environment for the delivery or collection of goods. It is therefore desirable to have a locker where the storage compartment is closed prior to delivery and can be easily opened for the delivery. It is desirable that once the delivery has been made the goods in the storage compartment can be held secure. It is desirable to provide such as system in a secure manner.

[0004] Other passive solutions allow storage compartments to be left in an open state where the lock bolt is in an extended position and the door is left ajar. Such a solution is ineffective in maintaining a clean dry environment as the gap between the door to the storage compartment and the storage compartment allows the ingress of moisture etc into the storage compartment.

[0005] In other configurations, a padlock is left open on the door to be closed after making the delivery. Once the padlock is locked, it can only be opened by a specific key. However, such a solution requires the delivery person to secure the padlock properly and potentially, the delivery is left unsecured.

[0006] In an alternative configuration, a storage locker may incorporate a locking mechanism, which is engaged by turning a handle. The access door to the locker, for example the lid, is closed but unlocked prior to delivery. When a delivery is made to the locker, the access door is closed and subsequently secured using a locking handle to engage the lock. In an alternative configuration, one or more locking mechanisms may be provided which following a delivery, are activated for example, by depressing a push button.

[0007] These alternate configurations are not reliably secure as they rely on a delivery person properly engaging a padlock or locking handle.

[0008] The increased volume of parcel deliveries and related issues described suggests a need for a more efficient and secure and cost effective delivery locker to benefit all parties in the delivery chain.

Summary of the Invention

[0009] The invention as described herein with reference to the appended claims is directed to a locking mechanism for an access panel of a storage locker comprising:

a receiver plate and a lock bolt moveable between an extended position and a retracted position, the receiver plate further comprising a planar member having a recess therein for engaging the extended lock bolt in the locked position; and

wherein the locking mechanism further comprises a stop member mounted on the receiver plate and slideable between a second position proximal to the recess and a first position overlying the recess and wherein the stop member is arranged to cooperate with the lock bolt to slide the stop member from the first position to the second position.

[0010] This locking mechanism provides a simple solution to the problems outlined above. The locking mechanism can be maintained in a plurality of configurations allowing the locker to be left closed but unlocked, locked, or open and facilitating deliveries in a clean, dry and secure environment. This passive solution allows the locker to be located in remote environments without the need for a power supply.

[0011] In the second position the access panel may be retainable in a locked arrangement wherein the lock bolt is extended and engages the recess or in an open arrangement wherein the lock bolt is extended but does not engage the recess; and in the first position, the access panel is retainable in a closed arrangement wherein the lock bolt is in a partially retracted position and does not engage the recess or in an open arrangement wherein the lock bolt is extended but does not engage the recess.

[0012] In the closed arrangement, the access panel can be closed allowing the storage area of the locker to be maintained clean and dry. The locker can be easily moved to an open arrangement by opening the access panel, and then securely closed without the need for a key or the like to engage or disengage the locking mechanism. This facilitates a secure one off delivery. Once the locker is returned to the locked arrangement, the lock is only disengageable by an authorised party.

[0013] The stop member may further arranged to move the lock bolt to the retracted position to facilitate movement from a closed arrangement to an open arrangement. This facilitates ease of movement of the lock bolt, and minimises the effort required on the part of the delivery person to open the locker.

[0014] The stop member may comprise a first planar member having a curved edge for cooperation with the lock bolt to slide the stop member from the first position to the second position.

[0015] The stop member may comprise a second planar member, and a plurality of connectors for connecting the first and second planar member.

[0016] The receiver plate may further comprise an extension plate extending obtusely from the planar member

and arranged such that the extension plate cooperates with the bolt to move the bolt from the extended position to the retracted position.

[0017] The locking mechanism may further comprise means for moving the lock bolt from the extended position to the retracted position. The means for moving the lock bolt from the extended position to the retracted position may comprise a key.

[0018] A further embodiment of the present invention includes a locker for a delivery or collection system, comprising a storage chamber, an access panel for accessing the storage chamber; and a locking mechanism comprising any of the features described above.

[0019] The access panel may further comprise an envelope flap through which goods are deposited in the chamber.

[0020] The envelope flap may further comprise one or more stop members for limiting an opening of the flap.

[0021] The locker may further comprise a divider mountable in the storage chamber for dividing the storage chamber into a plurality of chambers.

[0022] The divider may be arranged to divide the storage chamber into a first chamber located above the divider and a second chamber located below the divider and wherein goods are deposited in the first chamber through at least one of the envelope flap or access panel and wherein goods are deposited in the second chamber through the access panel.

[0023] The locker may further comprise one or more additional components selectable from a list including at least one of a display, monitoring means, a communications unit or a control unit.

[0024] The locker may further comprise a power supply for said additional components.

Brief Description of the Drawings

[0025] The invention will be more clearly understood from the following description of an embodiment thereof, given by way of example only, with reference to the accompanying drawings, in which:-

Figure 1 is a front isometric view of a locker.

Figure 2 is a rear profile view of the locker of Fig. 1

Figure 3 is a front isometric view of the locker of Figure 1 with an open front access panel showing a locking mechanism in situ.

Figure 4, a and b, provide a detailed view of a lock and a receiver plate of the locking mechanism shown in Figure 3.

Figure 5, a to d are a plurality of isometric views of an envelope flap assembly in disjoint and assembled form.

Figure 6 is a view of the envelope flap of Figure 5 in situ.

Figure 7, a and b show front and rear profile views respectively of an embodiment of the present invention.

Figure 8 is a profile view of a receiver plate for the locking mechanism of Figure 3.

Figure 9 is a profile view of a stop member for the locking mechanism of Figure 3.

Figure 10 is a side profile view of the receiver plate of Figure 8 with a stop member in a second or reset position.

Figure 11 is a side profile view of the receiver plate of Figure 8 with a stop member in a first or set position.

Figure 12 is a top view of a locker in accordance with the present invention view with an open access panel and extruded lock bolt.

Figure 13a is a top sectional view of the locker in accordance with the present invention with a closed access panel and an engaged lock bolt.

Figure 13b is a view of the receiver plate of Figure 8 with the stop member in the reset position.

Figure 14 is a top sectional view of the locker in accordance with the present invention with an open access panel and the stop member in the first or set position.

Figure 15 is a top sectional view of the locker in accordance with the present invention wherein the lock bolt is aligned with the stop member.

Figure 16 is a top sectional view of the locker in accordance with the present invention in a closed but unlocked arrangement.

Figure 17 is a top sectional view of the locker in accordance with the present invention in an open arrangement with the lock bolt in an extended position.

Detailed Description of the Drawings

[0026] The locker 101 is a storage unit for delivery and/or collection of goods. In a preferred embodiment the locker 101 is substantially cubic, however, it will be appreciated that it is not restricted as such. The walls of the locker 101 define an internal storage chamber where goods can be placed for delivery or collection. This chamber 104 is defined by a front wall 105, a plurality of side walls 102, in this case four and a rear wall 103. The front wall 105 of the chamber comprises a frame portion 106 and an access panel or door 107 mounted within the frame. The access panel may be hingedly connected to the frame portion 106 such that the access panel can pivot relative to the frame to provide or inhibit access to the storage chamber. It will be appreciated that the entire front wall of the locker may be the access panel. In such a configuration no frame portion 106 is provided. Such an access panel would be hingedly mounted to one of the plurality of side walls 102 of the locker.

[0027] The access panel 107 can be opened to reveal the internal storage chamber 104. The access panel as shown in Figure 1 is openable and closeable using a handle 301. This handle may sit flush with the access panel and may incorporate a recess into the access panel. Alternatively, the handle may have a lever structure

as in a conventional door handle or a push button. In an alternative configuration, the access panel may be openable and closeable using a pressure switch arrangement. In this configuration, application of pressure to the panel 107 causes the panel to open or close. This handle may alternatively be a push button. A lock or locking mechanism 108 is also included to enable the access panel to be locked in position. In a preferred configuration, a key 308 is provided. The key facilitates operation of the locking mechanism. In addition to or as an alternative to the key, the locking mechanism may also include a push button, which may be used to activate or deactivate the lock. The push button may include a keypad or a plurality of buttons or the like. A keypad and code sequence can be used to set or release the lock. A sensor may also be provided for sensing whether the access panel is opened or closed. This sensor may be a magnet or magnetic activated relay, a simple micro switch or the like. This sensor may operate in conjunction with a buzzer and power unit, for example a battery, such that when the access panel is opened the buzzer is activated, and only deactivated on closing the access panel. Such a feature would prompt the delivery person to close the door.

[0028] The locker 101 may be mounted as a letter box or parcel box, in racking, embedded in a wall located on a pedestal or otherwise mounted. The locker as shown in Figure 2, includes connection points 112 for connecting the locker to a mounting structure. For example, the connection points may be wall mountable back panel bolt holes.

[0029] In the configuration, shown in Figure 1, a second access panel 110 is also provided. This second access panel 110 may be an envelope flap or letter box style flap which can be used for the delivery of letter post or other small items. The second access panel 110 is located on the front wall 105 of the locker 101 within the frame 106. In an alternative configuration, the second access panel 110 may be part of the access panel 107. It will also be appreciated that the second access panel may be located in a side wall 102 of the locker. The second access panel 110 is pivotally mounted such that it pivots relative to the frame 106, access panel 107 or the wall of the locker in which it is located. This second access panel 110 can be locked independently of or in conjunction with the access panel 107. This locking can be used to prevent the delivery of junk mail. This may be implemented using the locking mechanism 108 or a separate locking mechanism, specific to the second access panel 110.

[0030] A display window 302, in the configuration shown is provided on the access panel 107. This is an optional feature. Alternatively and optionally, the display window may be mounted internally to the storage chamber. The display window may be configured to include a display to indicate optional information such as a name, address, mobile contact number, Bar Code, etc.

[0031] An optional feature, also shown in Figure 2, is an opening 117 for accessing the storage chamber from the rear of the locker. A further access panel may be provided to inhibit access to the storage chamber through the opening 117. Such an opening facilitates the easy retrieval of a package from the storage chamber from the rear of the locker. If, for example, the locker is embedded within a wall of a building, the rear of the locker may be accessible from inside of a building. A ventilation grill 118 is also provided.

[0032] The locker 101 also incorporates a locking mechanism 108 further described below. The locking mechanism comprises a first component 1081 integrateable to the frame 106 and a second component or receiver plate 1082 mountable on the access panel 107. The receiver plate 1082 comprises a lock bolt catch hole 1086 for engaging a lock bolt 303 of the first component 1081. The receiver plate 1082 also comprises an extension plate 1087.

[0033] A key 308 is also provided. The key is used to engage the lock bolt 303 and retract or extend the lock bolt 303 and/or engage the lock bolt in a locked configuration.

[0034] As outlined above an additional envelope flap 110 may be optionally provided. In a preferred configuration, the envelope flap 110 comprises flap 1101 and an envelope surround 1102. The flap 1101 is pivotally mounted in the envelope surround 1102. Pivot points 1105 on the envelope flap engage corresponding points 1104 on the envelope surround. The surround may be integral to the frame 106 or alternatively may be mounted on the frame 106 using mounts 1103, which extend from the surround. Additional stop members 1106 are optionally provided to limit the opening angle of the flap 1101 as the flap pivots relative to the surround. In a preferred configuration, these stop members are blocking pins. It will be appreciated that decreasing the opening angle will also decrease the risks associated with letter theft as it limits the ability to insert an implement into the storage chamber to extract it's contents. Optionally, hinges 1107 may be provided to facilitate removing of the envelope flap from the surround.

[0035] In a preferred configuration the surround 1102 comprises a base portion 11021, which extends at an angle 11022 to a side wall 11023 in which the flap 1101 is mounted.

[0036] The base 11021 is preferably at an acute angle 11022 to the side wall 11023 such that in the event that rain/water or alternative fluid penetrates the envelope flap, this fluid will flow out though the flap rather than into the storage chamber. In addition, this slanted base 11021 inhibits further the removal of the contents of the storage chamber through the flap 1101. Means for preventing the flap 1101 from opening is optionally provided. In the configuration of Figure 6, the means for preventing opening 1108 comprises wing nuts that in a vertical position prevent the flap 1101 from pivoting open. When wing nuts are in a horizontal position, the flap 1101 is free to pivot. Alternative means for closing include rotatable pegs. An additional locking mechanism may additionally or alter-

natively be provided to lock the envelope flap.

[0037] In an embodiment shown in Figure 7 a and b, a divider 124 is provided to optionally subdivide the internal chamber. A plurality of dividers may be provided to provide a multi-chamber embodiment. The divider may be located at any position within the chamber. A fixed divider 124 may be used to permanently provide two chambers. Alternatively a drop down shelf or divider can be pivotally mounted within the storage chamber. This pivotally mounted divider provides flexibility allowing one or two storage chambers to be provided. Alternatively a shelf or divider can be slidably mounted within the storage chamber so that the capacity of the two chambers can be altered. For example locating the divider closer to the top of the storage chamber than the bottom will result in a top chamber having a smaller capacity than the lower chamber. The shelf or divider can be slidably mounted on rails. Alternatively a series of positioning struts can be located along the inner walls of the storage chamber. The shelf can then be supported by any of these positioning struts to support the shelf or divider. In the configurations of Figure 7, a and b, the upper chamber, i.e. above the shelf may be used to collect deliveries made through the envelope flap 110. The lower chamber 126 is accessible via the access panel 107. It will be appreciated that each chamber may alternatively have a separate access panel or panels to individually access the chamber or access one or more areas of each chamber. The shelf may be maintained in a locked position using an optional lock 24. The two-chamber embodiment shown in Figure 7 facilitates secure letter post separation from parcel object deliveries. The two chambers shown in Figure 7 are also accessible using a rear access point 117 as described above in relation to Figure 2. This may be a single access point which provides access to both chambers or individual access points may be provided as shown in Figure 7b.

[0038] As previously discussed, an optional display unit 302 may be also provided on the external face of front panel. This display unit can be used for Proof of Delivery or Proof of Collection purposes. The display unit may be a fixed identifier displaying data unique to the particular locker, such as a bar code, personal details of the owner of the box, an address or geographical coordinates such as GPS coordinates. Alternatively, the display may be a programmable display. The display may be programmable by a control unit. The display may be programmed to display real time date and time information and/or a programmable data code unique to the locker. Data code formats include bar codes such as, but not restricted to UPC (Universal Product Code) and QR (Quick Response) Code formats. The control unit may be powered by a power supply such as a battery. This battery may also be used to power the buzzer mentioned above. The display unit may also display information which is scannable. On making a delivery, for example, the delivery person may scan the display unit and/or the parcel label barcode. This scan can be used for delivery tracking and proof of delivery. Similarly, if a package is being collected from the locker, the collector may scan the display for proof of collection. The display unit 302 may be used to assign unique data codes to individual parcel objects and/or deliveries. A controller may be provided to allow the display to be programmed, or allow customised messages or information to be displayed. A further display unit, such as an LED may also be provided to indicate that a delivery has been made to the chamber. For example on closing the access panel, the LED may be configured to illuminate to indicate that a delivery has been made. The LED may also facilitate displaying that the access panel is locked correctly. This may be achieved, for example, by flashing the LED until the access panel has been locked.

[0039] A communications module, for example a Bluetooth, Zigbee, GPS unit or the like may also be provided for remote communication with the locker. Such a unit would allow alerts to be sent to the owner of the locker. Alerts may include tamper alerts, or alerts that a delivery has been made. Such a unit would also facilitate remote monitoring of the locker, thereby improving security. This unit may be powered by a battery unit.

[0040] One or more internal secure additional chambers with locking mechanisms are optionally provided. These internal chambers may be used for storage of payment in a charge on delivery scenario. Access to these secure chambers is preferably restricted to approved persons only.

[0041] A preferred configuration of the locking mechanism 108 and receiver plate 1082 is shown in Figure 3, 4 and Figures 8 to 17. Referring to Figures 3 and 4a and 4b, the locking mechanism 108 includes a first component 1081 having a lock bolt 303 and a lock barrel 304. A receiver plate 1082 includes a bolt catch hole 1086 for engaging the lock bolt. The lock bolt 303 is moveable between an extended and a retracted position. A key 308 is provided. The key is preferably used to engage the lock bolt and move it between the extended and retracted or partially retracted position.

[0042] The receiver plate 1082, shown in a preferred configuration in Figure 8, includes an extension plate 1087. The extension plate 1087 extends at an angle from the main body 1082 of the receiver plate. The angle is preferably obtuse. It will be appreciated that when moving from the open arrangement to an arrangement wherein the access panel is closed, the extension plate 1087 cooperates with the bolt 303 to move the bolt from the extended position to the retracted position. Once the extension plate 1087 is pushed sufficiently past the bolt, the bolt can then extend into the bolt hole 1086 to retain the access panel in a locked arrangement. In an alternative configuration the receiver plate may not include the extension plate. In such a configuration it will be appreciated that the bolt has an angular edge such that when the receiver plate meets the bolt, the angular edge on the bolt cooperates with the straight edge of the receiver plate and the bolt is pushed back. In the configuration,

wherein the bolt and the plate both have straight edges, the receiver plate would not cooperate with the bolt to push it back, but would merely strike the bolt and inhibit the locking mechanism.

[0043] In the open arrangement shown in Figure 12, the bolt 303 is in an extended position. The access panel is open. The configuration of Figure 12 is applicable when the door has been opened or prior to the door being closed.

[0044] An additional stop member 1088 is provided. This stop member is slideably mounted on the receiver (catch) plate 1082 in the region of the bolt catch hole 1086. In the optional configuration shown in Figure 9, the stop member comprises a front plate 305 and a back plate 1090. The front and back plates are joined using a plurality of connector clips 1089. The front plate 305 of the stop member has a curved edge 1092 that extends obtusely from the front plate 305 of the stop member. The curved edge 1092 extends away from the back plate 1090. In a first position shown in Figure 11, the stop member 1088 is positioned over the bolt hole 1086. This maintains the locker in a closed but unlocked position. This first position is a set position. In this position, when the stop member is over the bolt hole, the bolt 303 cannot extend into the bolt hole.

[0045] The owner or the person awaiting the delivery can set the stop member 1088 in this first or set position.

[0046] To make a delivery to the locker, the delivery person can open the door as the stop member is in the first position, preventing the bolt extending into the bolt hole. When the door is opened, the bolt moves from the retracted position to an extended open position, such as that shown in Figure 17.

[0047] When the door is pushed closed, the extended bolt engages with the curved edge of the stop member and pushes it back to a position proximal to the bolt hole but not covering the hole as shown in Figure 10. This is a reset position or second position. The bolt 303 is then free to extend into the bolt hole 1086 and into the locked position. The stop member 1088 facilitates a once off secure delivery being made without the need for access authorisation or the delivery person to actively lock the unit. As shown in Figure 13a, the bolt 303 is extended through the bolt hole 1086. This retains the access panel in a locked position. The side view of Figure 13b shows the bolt 303 extending through the bolt hole 1086 and the stop member 1088 in the second or reset position proximal to the bolt hole.

[0048] In the locked position or arrangement, the bolt 303 is in an extended position with the bolt 303 extending through the bolt catch hole 1086 to retain the access panel in a locked position. In a closed but unlocked arrangement the bolt 303 is in a retracted position and does not extend through the bolt catch hole. The access panel is then free to open. The extension plate 1087 automatically engages the lock bolt in the locked arrangement when the front panel is closed, thus removing the need for the delivery person to lock the locker after making a delivery and closing the panel.

[0049] As an example of use of the locking system in accordance with the present application, the owner or user of the locker opens the door of the locker and places the stop member 1088 in the first or set position. The owner of the locker may use the key to retract the bolt 303 to enable the access panel to be moved to the open position if it was previously in a locked arrangement. This is as shown in Figure 14.

[0050] The owner then retracts the bolt (if not previously retracted) or maintains the bolt in a retracted position, for example using the key to engage the bolt.

[0051] The owner then closes the access panel. The bolt is retained in the retracted position, for example using the key. In the configuration shown in Figure 15 the stop member 1088 is in the set position over the bolt hole 1086 and once the bolt is released from the retracted position, as shown in Figure 16, it is prevented from engaging the bolt hole by the stop member 1088. The access panel is therefore in a closed but unlocked state.

[0052] When the delivery person arrives with a delivery, they can open the access panel and place the goods inside the storage chamber. The curved edge 1092 of the stop member engages the lock bolt 303 pushing it to a retracted or partially retracted position and thus allows the door/access panel to open. When the access panel has been opened the lock bolt 303 then extends to its extended position. When the delivery person closes the door, the curved extension plate 1087 of the receiver plate 1082 engages the bolt and pushes it into a retracted position such that the door can be closed. Once the curved extension plate 1087 of the receiver plate 1082 has passed the lock bolt, the lock bolt 303 then extends and engages the curved edge 1092 of the stop member 1088 pushing it to a reset position, proximal to the bolt hole 1086. The lock bolt 303 is then free to extend into the bolt hole 1086 and the access panel is retained in a locked position. The owner of the locker can only then access the contents of the storage chamber through the use of the key or the like to retract the lock bolt 303 and open the locker. As above it will be appreciated that the curved edge may be provided on the lock bolt rather than the receiver plate 1082. Functionality of the locking mechanism will be the same.

[0053] The words "comprises/comprising" and the words "having/including" when used herein with reference to the present invention are used to specify the presence of stated features, integers, steps or components but does not preclude the presence or addition of one or more other features, integers, steps, components or groups thereof. It is appreciated that certain features of the invention, which are, for clarity, described in the context of separate embodiments, may also be provided in combination in a single embodiment. Conversely, various features of the invention, which are for brevity, described in the context of a single embodiment, may also be provided separately or in any suitable sub-combination.

Claims

1. A locking mechanism (108) for an access panel of a storage locker comprising:

   a receiver plate (1082) and a lock bolt (303) moveable between an extended position and a retracted position, the receiver plate (1082) further comprising a planar member (1082) having a recess (1086) therein for engaging the extended lock bolt (303) in the locked position; and
   wherein the locking mechanism further comprises a stop member (1088) mounted on the receiver plate (1082) and slideable between a second position proximal to the recess (1086) and a first position overlying the recess (1086) and wherein the stop member is arranged to cooperate with the lock bolt to slide the stop member from the first position to the second position.

2. The locking mechanism according to Claim 1 wherein in the second position the access panel is retainable in a locked arrangement wherein the lock bolt is extended and engages the recess (1086) or in an open arrangement wherein the lock bolt is extended but does not engage the recess; and in the first position, the access panel is retainable in a closed arrangement wherein the lock bolt is in a partially retracted position and does not engage the recess (1086) or in an open arrangement wherein the lock bolt is extended but does not engage the recess.

3. The locking mechanism according to claim 2, wherein the stop member is further arranged to move the lock bolt to the retracted position to facilitate movement from a closed arrangement to an open arrangement.

4. The locking mechanism according to any previous claim wherein the stop member comprises a first planar member (305) having a curved edge (1092) for cooperation with the lock bolt (303) to slide the stop member (1088) from the first position to the second position.

5. The locking mechanism according to Claim 4, wherein the stop member comprises a second planar member (1090), and a plurality of connectors for connecting the first and second planar member.

6. The locking mechanism according to any previous claim wherein the receiver plate (1082) further comprises an extension plate (1087) extending obtusely from the planar member (1082) and arranged such that the extension plate cooperates with the bolt to move the bolt (303) from the extended position to the retracted position.

7. The locking mechanism according to any previous claim, further comprising means for moving the lock bolt from the extended position to the retracted position.

8. The locking mechanism according to Claim 7 wherein the means for moving the lock bolt from the extended position to the retracted position comprises a key.

9. A locker for a delivery or collection system, comprising
   a storage chamber (104),
   an access panel (107) for accessing the storage chamber (104); and a locking mechanism according to any of Claims 1 to 8.

10. The locker according to claim 9, wherein the access panel (107) further comprises an envelope flap (110) through which goods are deposited in the chamber (104).

11. The locker according to claim 10 wherein the envelope flap further comprises a stop member for limiting an opening of the flap (1101).

12. The locker according to any of claims claim 9 to 11, further comprising a divider mountable in the storage chamber (104) for dividing the storage chamber into a plurality of chambers.

13. The locker according to claim 12 when dependent on claims 10 or 11, wherein the divider is arranged to divide the storage chamber into a first chamber located above the divider and a second chamber located below the divider and wherein goods are deposited in the first chamber through at least one of the envelope flap (110) or access panel (107) and wherein goods are deposited in the second chamber through the access panel (107).

14. The locker according to any of claims 9 to 13, further comprising one or more additional components selectable from a list including at least one of a display, monitoring means, a communications unit or a control unit.

15. The locker according to Claim 14, further comprising a power supply for said additional components.

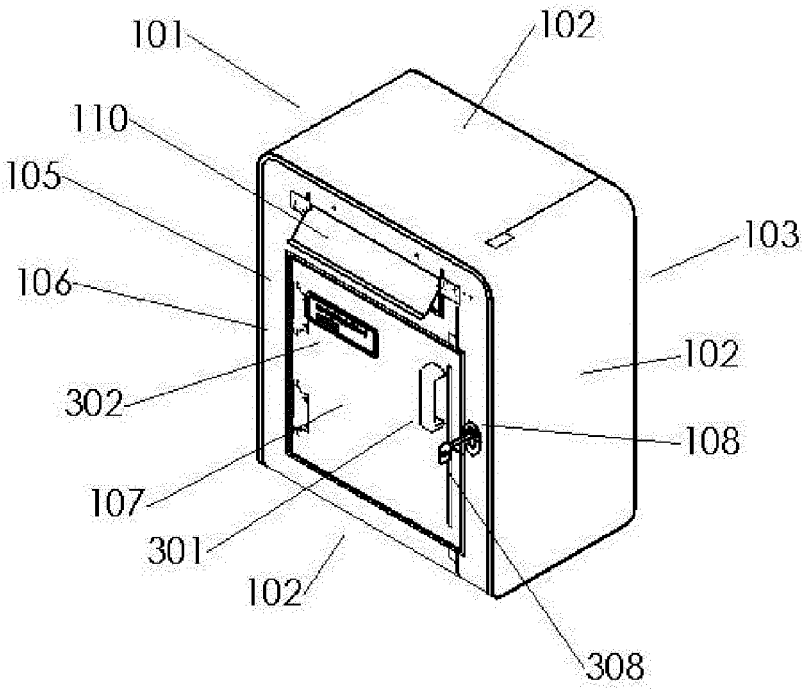

Figure 1

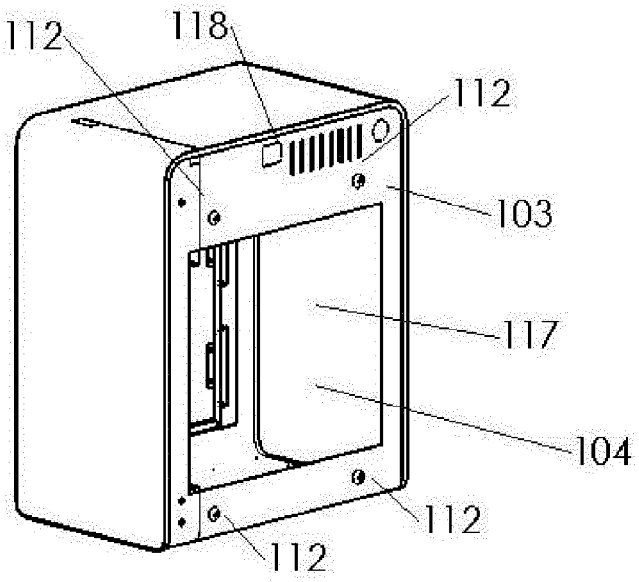

Figure 2

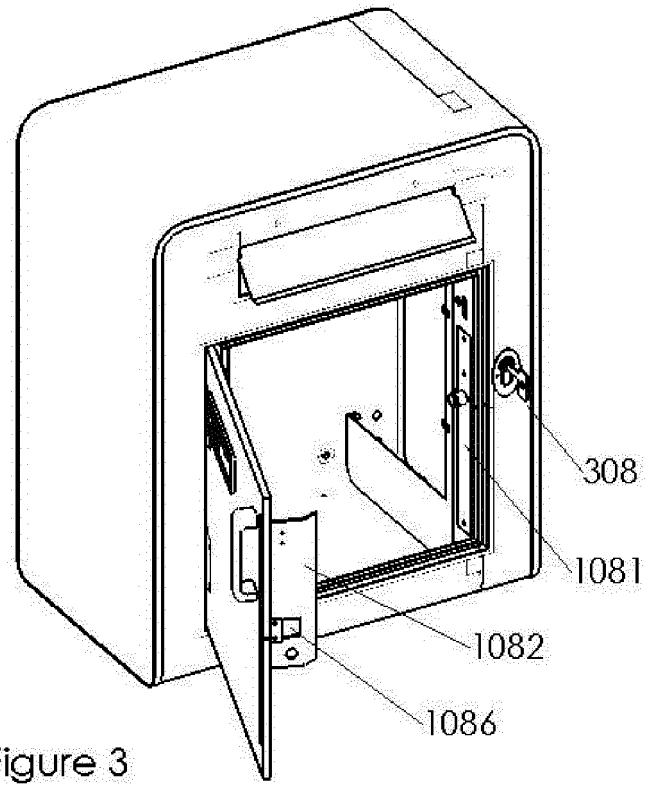

Figure 3

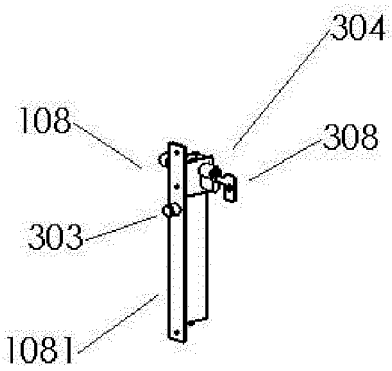

Figure 4a

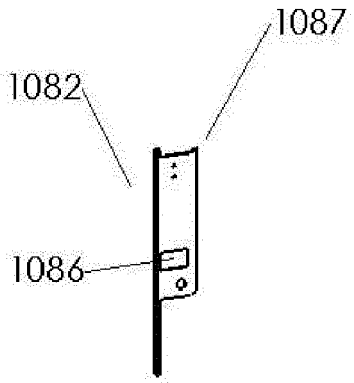

Figure 4b

Figure 4

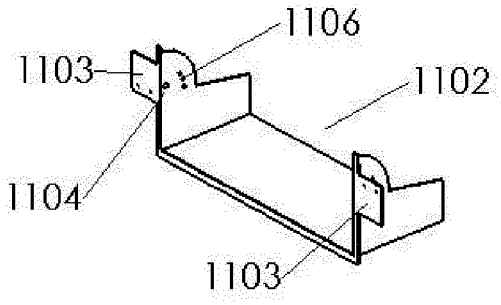

Figure 5b

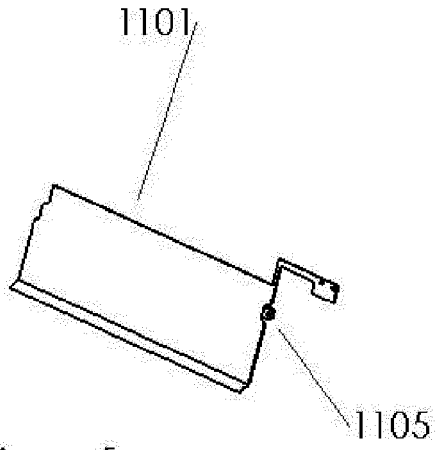

Figure 5a

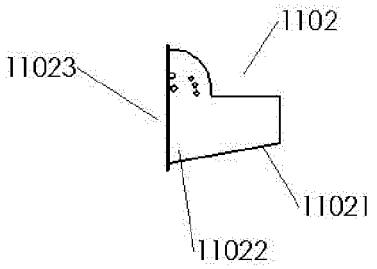

Figure 5c

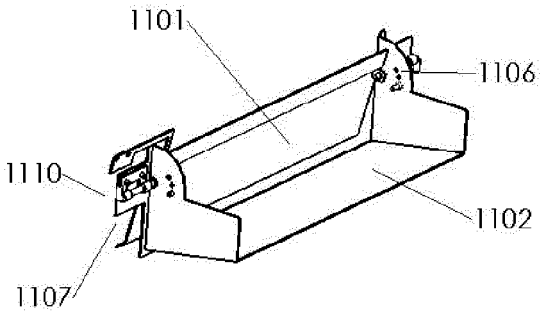

Figure 5d

Figure 5

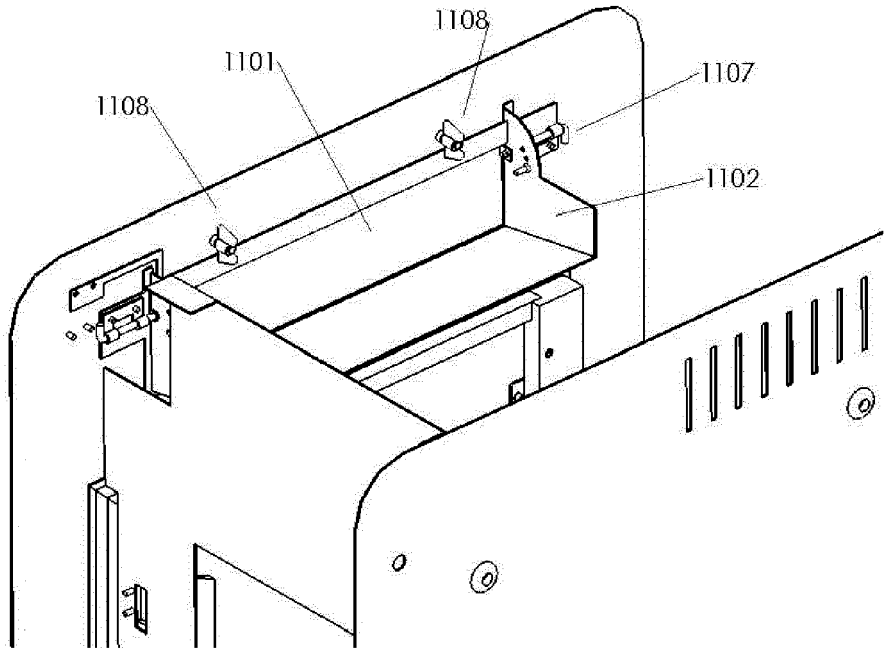

Figure 6

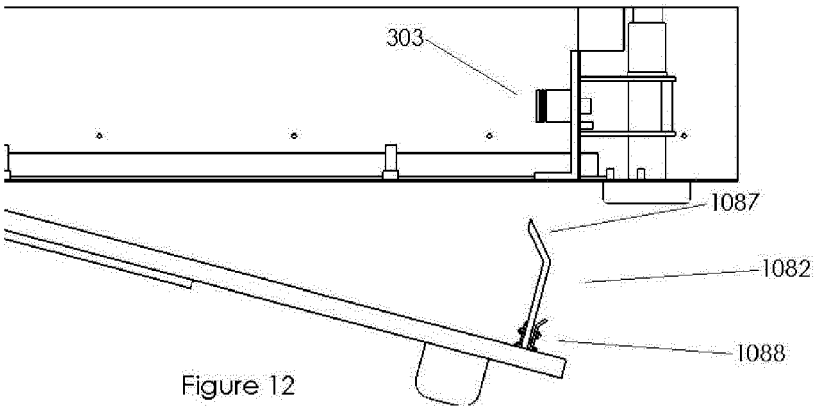

Figure 12

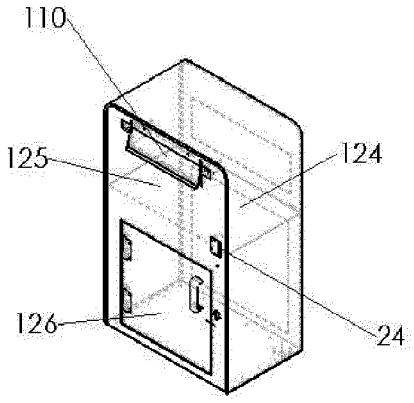

Figure 7a

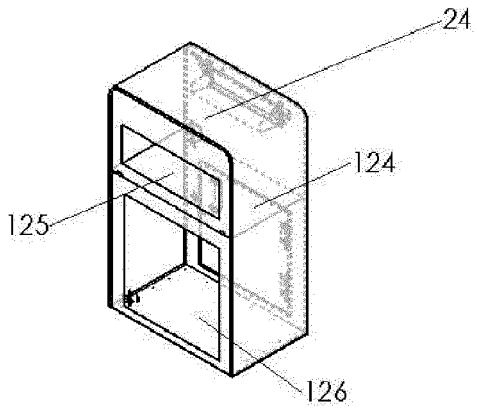

Figure 7b

Figure 7

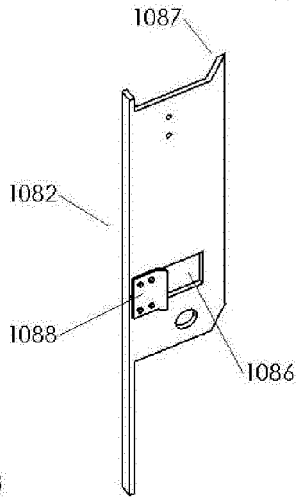

Figure 8

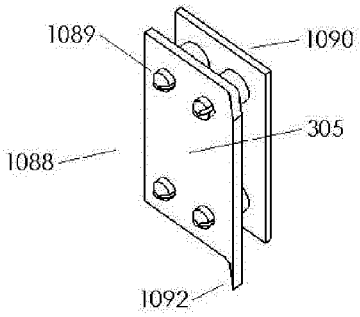

Figure 9

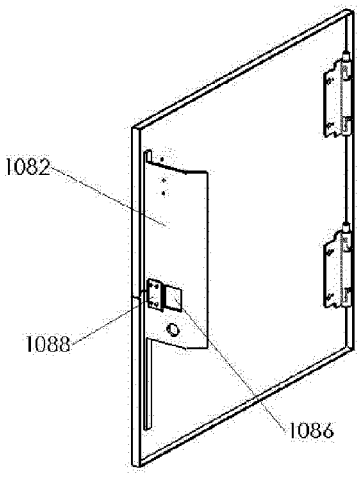

Figure 10

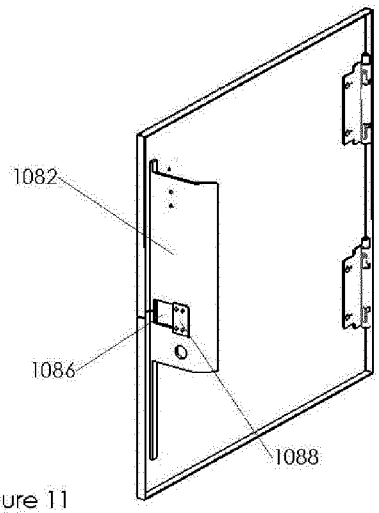

Figure 11

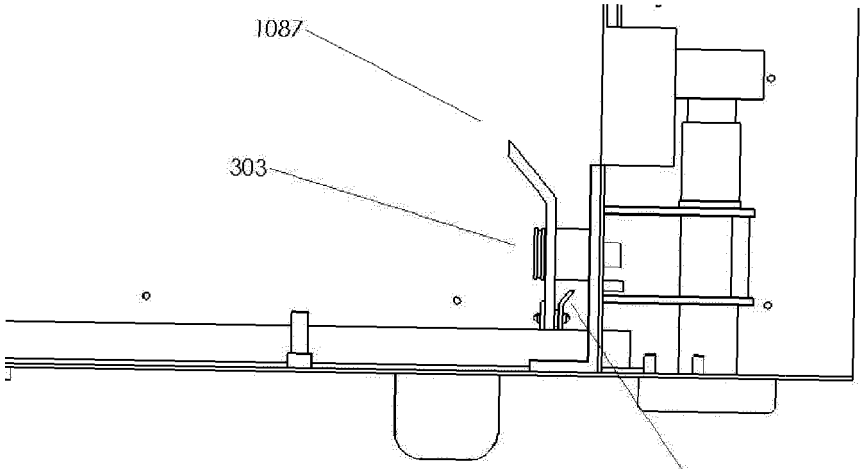

Figure 13a

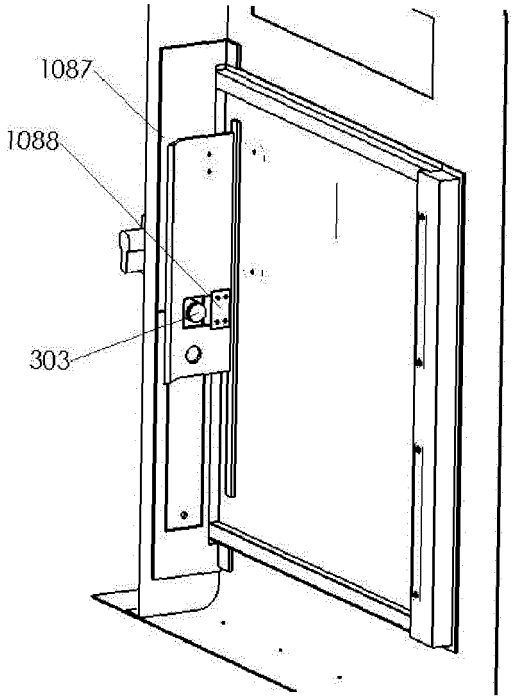

Figure 13b

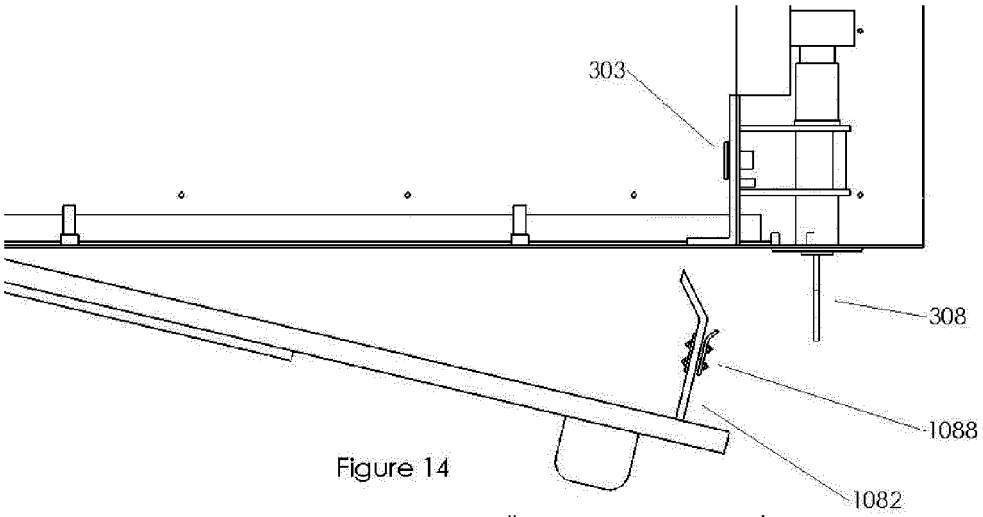

Figure 14

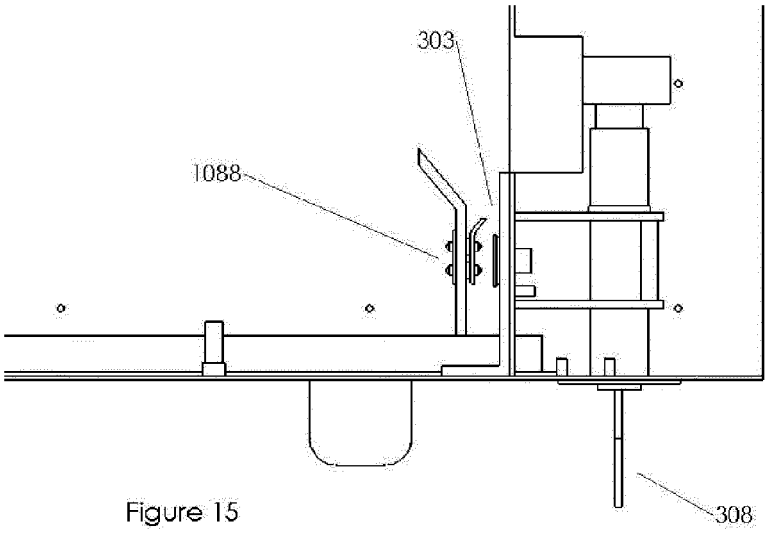

Figure 15

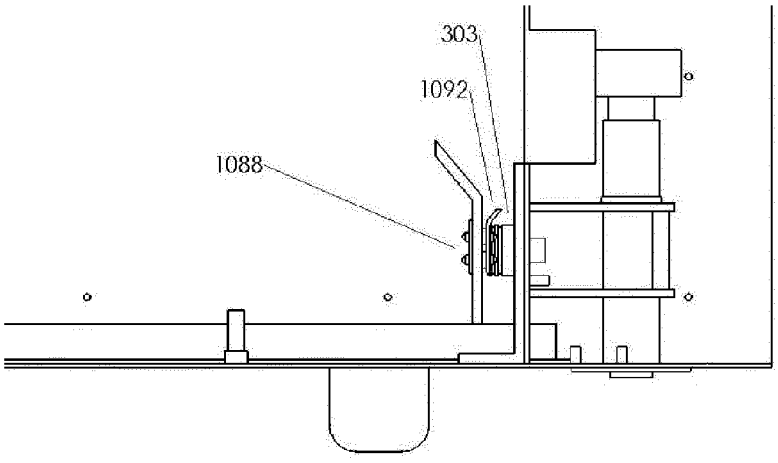

Figure 16

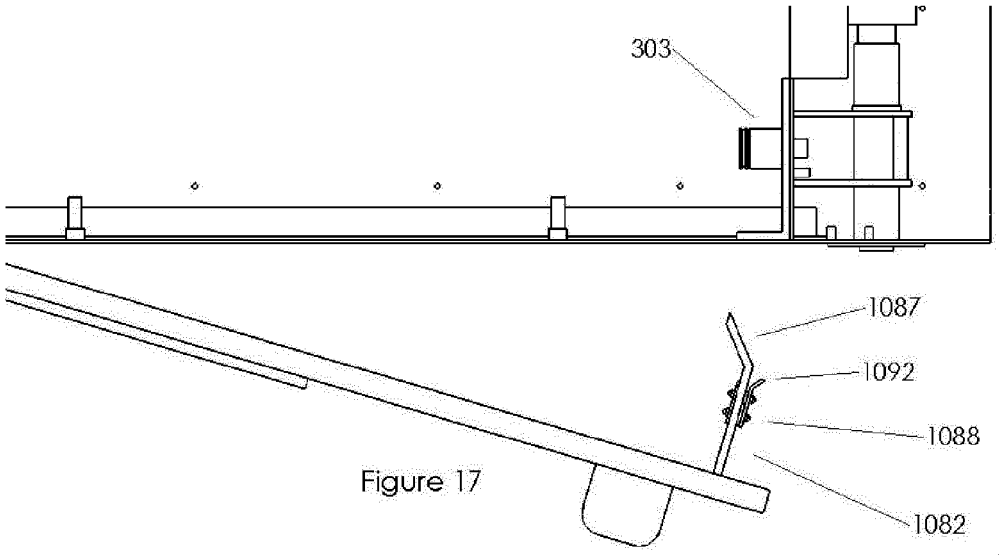

Figure 17

Europäisches Patentamt
European Patent Office
Office européen des brevets

EUROPEAN SEARCH REPORT

Application Number
EP 13 18 0000

DOCUMENTS CONSIDERED TO BE RELEVANT

Category	Citation of document with indication, where appropriate, of relevant passages	Relevant to claim	CLASSIFICATION OF THE APPLICATION (IPC)
A	DE 20 2009 009824 U1 (EURO LOCKS SICHERHEITSEINRICHT [DE]) 1 October 2009 (2009-10-01) * the whole document *	1,9	INV. E05B15/02 A47G29/20
A	DE 20 2006 020612 U1 (BURG WAECHTER KG [DE]) 5 March 2009 (2009-03-05) * the whole document *	1,9	

TECHNICAL FIELDS SEARCHED (IPC)

E05B
A47G

The present search report has been drawn up for all claims

Place of search	Date of completion of the search	Examiner
The Hague	9 May 2014	Westin, Kenneth

CATEGORY OF CITED DOCUMENTS

X : particularly relevant if taken alone
Y : particularly relevant if combined with another document of the same category
A : technological background
O : non-written disclosure
P : intermediate document

T : theory or principle underlying the invention
E : earlier patent document, but published on, or after the filing date
D : document cited in the application
L : document cited for other reasons

& : member of the same patent family, corresponding document

EPO FORM 1503 03.82 (P04C01)

ANNEX TO THE EUROPEAN SEARCH REPORT ON EUROPEAN PATENT APPLICATION NO. EP 13 18 0000

This annex lists the patent family members relating to the patent documents cited in the above-mentioned European search report. The members are as contained in the European Patent Office EDP file on
The European Patent Office is in no way liable for these particulars which are merely given for the purpose of information.

09-05-2014

Patent document cited in search report	Publication date	Patent family member(s)	Publication date
DE 202009009824 U1	01-10-2009	NONE	
DE 202006020612 U1	05-03-2009	NONE	

EPO FORM P0459

For more details about this annex : see Official Journal of the European Patent Office, No. 12/82