(19) Europäisches Patentamt
European Patent Office
Office européen des brevets

(11) EP 2 923 646 B1

(12) **EUROPEAN PATENT SPECIFICATION**

(45) Date of publication and mention of the grant of the patent:
22.07.2020 Bulletin 2020/30

(51) Int Cl.:
A61B 17/00 *(2006.01)*

(21) Application number: **15161156.3**

(22) Date of filing: **26.03.2015**

(54) **VERIFICATION OF NUMBER OF BATTERY EXCHANGES/PROCEDURE COUNT**

ÜBERPRÜFUNG DER ANZAHL BATTERIEAUSTAUSCHE/VERFAHRENSZÄHLUNG

VÉRIFICATION DU NOMBRE DE CHANGEMENTS DE BATTERIES / DÉCOMPTE DES PROCÉDURES

(84) Designated Contracting States:
AL AT BE BG CH CY CZ DE DK EE ES FI FR GB GR HR HU IE IS IT LI LT LU LV MC MK MT NL NO PL PT RO RS SE SI SK SM TR

(30) Priority: **26.03.2014 US 201414226094**

(43) Date of publication of application:
30.09.2015 Bulletin 2015/40

(73) Proprietor: **Ethicon LLC**
00969 Guaynabo (PR)

(72) Inventors:
- **Leimbach, Richard L.**
  Cincinnati, OH Ohio 45209 (US)
- **Adams, Shane R.**
  Lebanon, OH Ohio 45036 (US)
- **Overmyer, Mark D.**
  Cincinnati, OH Ohio 45236 (US)
- **Swensgard, Brett E.**
  West Chester, OH Ohio 45069 (US)
- **Lytle, IV, Thomas W.**
  Liberty Township, OH Ohio 45044 (US)
- **Shelton, IV, Frederick E.**
  Hillsboro, OH Ohio 45133 (US)
- **Houser, Kevin L.**
  Springboro, OH Ohio 45066 (US)

(74) Representative: **Carpmaels & Ransford LLP**
One Southampton Row
London WC1B 5HA (GB)

(56) References cited:
EP-A2- 2 484 304 **WO-A1-94/14129**
US-A- 4 996 975

Note: Within nine months of the publication of the mention of the grant of the European patent in the European Patent Bulletin, any person may give notice to the European Patent Office of opposition to that patent, in accordance with the Implementing Regulations. Notice of opposition shall not be deemed to have been filed until the opposition fee has been paid. (Art. 99(1) European Patent Convention).

EP 2 923 646 B1

Printed by Jouve, 75001 PARIS (FR)

Description

BACKGROUND

[0001] The present disclosure relates to surgical instruments and, in various circumstances, to surgical stapling and cutting instruments and staple cartridges therefor that are designed to staple and cut tissue. A local in-device memory feature for electrically powered medical equipment is known from WO9414129A1. Therein is disclosed a non-volatile memory disposed within electrically powered medical equipment is described. The non-volatile memory may be programmed to store utilization limits and parametric data for the equipment. An external control module may be programmed to store the utilization history for the equipment in the non-volatile memory on an on-going basis. The control module (36) compares the utilization limits and history during each use, and disables the equipment if an utilization limit is exceeded. A medical manipulator system is known from EP2484304A2. An electronic endoscope apparatus capable of warning lifetime of electronic scope is known from US499697A.

BRIEF DESCRIPTION OF THE DRAWINGS

[0002] The features and advantages of this disclosure, and the manner of attaining them, will become more apparent and the disclosure itself will be better understood by reference to the following description of embodiments of the disclosure taken in conjunction with the accompanying drawings, wherein:

FIG. 1 is a perspective view of a surgical instrument that has an interchangeable shaft assembly operably coupled thereto;
FIG. 2 is an exploded assembly view of the interchangeable shaft assembly and surgical instrument of FIG. 1;
FIG. 3 is another exploded assembly view showing portions of the interchangeable shaft assembly and surgical instrument of FIGS. land 2;
FIG. 4 is an exploded assembly view of a portion of the surgical instrument of FIGS. 1-3;
FIG. 5 is a cross-sectional side view of a portion of the surgical instrument of FIG. 4 with the firing trigger in a fully actuated position;
FIG. 6 is another cross-sectional view of a portion of the surgical instrument of FIG. 5 with the firing trigger in an unactuated position;
FIG. 7 is an exploded assembly view of one form of an interchangeable shaft assembly;
FIG. 8 is another exploded assembly view of portions of the interchangeable shaft assembly of FIG. 7;
FIG. 9 is another exploded assembly view of portions of the interchangeable shaft assembly of FIGS. 7 and 8;
FIG. 10 is a cross-sectional view of a portion of the interchangeable shaft assembly of FIGS. 7-9;
FIG. 11 is a perspective view of a portion of the shaft assembly of FIGS. 7-10 with the switch drum omitted for clarity;
FIG. 12 is another perspective view of the portion of the interchangeable shaft assembly of FIG. 11 with the switch drum mounted thereon;
FIG. 13 is a perspective view of a portion of the interchangeable shaft assembly of FIG. 11 operably coupled to a portion of the surgical instrument of FIG. 1 illustrated with the closure trigger thereof in an unactuated position;
FIG. 14 is a right side elevational view of the interchangeable shaft assembly and surgical instrument of FIG. 13;
FIG. 15 is a left side elevational view of the interchangeable shaft assembly and surgical instrument of FIGS. 13 and 14;
FIG. 16 is a perspective view of a portion of the interchangeable shaft assembly of FIG. 11 operably coupled to a portion of the surgical instrument of FIG. 1 illustrated with the closure trigger thereof in an actuated position and a firing trigger thereof in an unactuated position;
FIG. 17 is a right side elevational view of the interchangeable shaft assembly and surgical instrument of FIG. 16;
FIG. 18 is a left side elevational view of the interchangeable shaft assembly and surgical instrument of FIGS. 16 and 17;
FIG. 18A is a right side elevational view of the interchangeable shaft assembly of FIG. 11 operably coupled to a portion of the surgical instrument of FIG. 1 illustrated with the closure trigger thereof in an actuated position and the firing trigger thereof in an actuated position;
FIG. 19 is a perspective view of a portion of an interchangeable shaft assembly showing an electrical coupler arrangement;
FIG. 20 is an exploded assembly view of portions of the interchangeable shaft assembly and electrical coupler of FIG. 19;
FIG. 21 is a perspective view of circuit trace assembly;
FIG. 22 is a plan view of a portion of the circuit trace assembly of FIG. 21;
FIG. 23 is a perspective view of a portion of another interchangeable shaft assembly showing another electrical coupler arrangement;
FIG. 24 is an exploded assembly view of portions of the interchangeable shaft assembly and electrical coupler of FIG. 23;
FIG. 25 is an exploded slip ring assembly of the electrical coupler of FIGS. 23 and 24;
FIG. 26 is a perspective view of a portion of another interchangeable shaft assembly showing another electrical coupler arrangement;
FIG. 27 is an exploded assembly view of portions of

the interchangeable shaft assembly and electrical coupler of FIG. 26;

FIG. 28 is a front perspective view of a portion of the slip ring assembly of the electrical coupler of FIGS. 26 and 27;

FIG. 29 is an exploded assembly view of the slip ring assembly portion of FIG. 28; and

FIG. 30 is a rear perspective view of the portion of slip ring assembly of FIGS. 28 and 29;

FIG. 31 is a perspective view of a surgical instrument comprising a power assembly, a handle assembly, and an interchangeable shaft assembly;

FIG. 32 is perspective view of the surgical instrument of FIG. 31 with the interchangeable shaft assembly separated from the handle assembly;

FIG. 33 is a circuit diagram of the surgical instrument of FIG. 31;

FIG. 34 is a block diagram of interchangeable shaft assemblies for use with the surgical instrument of FIG. 31;

FIG. 35 is a perspective view of the power assembly of the surgical instrument of FIG. 31 separated from the handle assembly;

FIG. 36 is a block diagram the surgical instrument of FIG. 31 illustrating interfaces between the handle assembly and the power assembly and between the handle assembly and the interchangeable shaft assembly;

FIG. 37 is a power management module of the surgical instrument of FIG. 31;

FIG. 38 is a perspective view of a surgical instrument comprising a power assembly and an interchangeable working assembly assembled with the power assembly;

FIG. 39 is a block diagram of the surgical instrument of FIG. 38 illustrating an interface between the interchangeable working assembly and the power assembly;

FIG. 40 is a block diagram illustrating a module of the surgical instrument of FIG. 38;

FIG. 41 is a perspective view of a surgical instrument comprising a power assembly and a interchangeable working assembly assembled with the power assembly;

FIG. 42 is a circuit diagram of an exemplary power assembly of the surgical instrument of FIG. 41;

FIG. 43 is a circuit diagram of an exemplary power assembly of the surgical instrument of FIG. 41;

FIG. 44 is a circuit diagram of an exemplary interchangeable working assembly of the surgical instrument of FIG. 41;

FIG. 45 is a circuit diagram of an exemplary interchangeable working assembly of the surgical instrument of FIG. 41;

FIG. 46 is a block diagram depicting an exemplary module of the surgical instrument of FIG. 41;

FIG. 47A is a graphical representation of an exemplary communication signal generated by a working assembly controller of the interchangeable working assembly of the surgical instrument of FIG. 41 as detected by a voltage monitoring mechanism;

FIG. 47B is a graphical representation of an exemplary communication signal generated by a working assembly controller of the interchangeable working assembly of the surgical instrument of FIG. 41 as detected by a current monitoring mechanism; and

FIG. 47C is a graphical representation of effective motor displacement of a motor of the interchangeable working assembly of FIG. 41 in response to the communication signal generated by the working assembly controller of FIG. 47A;

FIG. 48 is a perspective view of a surgical instrument comprising a handle assembly and a shaft assembly including an end effector;

FIG. 49 is a perspective view of the handle assembly of the surgical instrument of FIG. 48;

FIG. 50 is an exploded view of the handle assembly of the surgical instrument of FIG. 48;

FIG. 51 is a schematic diagram of a bailout feedback system of the surgical instrument of FIG. 48;

FIG. 52 is a block diagram of a module for use with the bailout feedback system of FIG. 51;

FIG. 53 is a block diagram of a module for use with the bailout feedback system of FIG. 51;

FIG. 54 illustrates one instance of a power assembly comprising a usage cycle circuit configured to generate a usage cycle count of the battery back;

FIG. 55 illustrates one instance of a usage cycle circuit comprising a resistor-capacitor timer;

FIG. 56 illustrates one instance of a usage cycle circuit comprising a timer and a rechargeable battery;

FIG. 57 illustrates one instance of a combination sterilization and charging system configured to sterilize and charge a power assembly simultaneously;

FIG. 58 illustrates one instance of a combination sterilization and charging system configured to sterilize and charge a power assembly having a battery charger formed integrally therein;

FIG. 59 is a schematic of a system for powering down an electrical connector of a surgical instrument handle when a shaft assembly is not coupled thereto;

FIG. 60 is a flowchart depicting a method for adjusting the velocity of a firing element according to various embodiments of the present disclosure;

FIG. 61 is a flowchart depicting a method for adjusting the velocity of a firing element according to various embodiments of the present disclosure;

FIG. 62 is a partial, perspective view of an end effector and a fastener cartridge according to various embodiments of the present disclosure;

FIG. 63 is partial, perspective view of an end effector and a fastener cartridge according to various embodiments of the present disclosure;

FIG. 64 is a cross-sectional, elevation view of an end effector and a fastener cartridge according to various embodiments of the present disclosure;

FIG. 65 is a cross-sectional, elevation view of an end effector and a fastener cartridge according to various embodiments of the present disclosure;

FIG. 66 is a partial, perspective view of an end effector with portions removed and a fastener cartridge according to various embodiments of the present disclosure;

FIG. 67 is a partial, perspective view of an end effector with portions removed and a fastener cartridge according to various embodiments of the present disclosure;

FIG. 68(A) is a schematic depicting an integrated circuit according to various embodiments of the present disclosure;

FIG. 68(B) is a schematic depicting a magnetoresistive circuit according to various embodiments of the present disclosure; and

FIG. 68(C) is a table listing various specifications of a magnetoresistive sensor according to various embodiments of the present disclosure.

DETAILED DESCRIPTION

[0003] The invention is described in the claims. Certain exemplary embodiments will now be described to provide an overall understanding of the principles of the structure, function, manufacture, and use of the devices and methods disclosed herein.

[0004] The terms "proximal" and "distal" are used herein with reference to a clinician manipulating the handle portion of the surgical instrument. The term "proximal" referring to the portion closest to the clinician and the term "distal" referring to the portion located away from the clinician. It will be further appreciated that, for convenience and clarity, spatial terms such as "vertical," "horizontal," "up," and "down" may be used herein with respect to the drawings. However, surgical instruments are used in many orientations and positions, and these terms are not intended to be limiting and/or absolute.

[0005] FIGS. 1-6 depict a motor-driven surgical cutting and fastening instrument 10 that may or may not be reused. In the illustrated embodiment, the instrument 10 includes a housing 12 that comprises a handle 14 that is configured to be grasped, manipulated and actuated by the clinician. The housing 12 is configured for operable attachment to an interchangeable shaft assembly 200 that has a surgical end effector 300 operably coupled thereto that is configured to perform one or more surgical tasks or procedures. As the present Detailed Description proceeds, it will be understood that the various unique and novel arrangements of the various forms of interchangeable shaft assemblies disclosed herein may also be effectively employed in connection with robotically-controlled surgical systems. Thus, the term "housing" may also encompass a housing or similar portion of a robotic system that houses or otherwise operably supports at least one drive system that is configured to generate and apply at least one control motion which could be used to actuate the interchangeable shaft assemblies disclosed herein and their respective equivalents. The term "frame" may refer to a portion of a handheld surgical instrument. The term "frame" may also represent a portion of a robotically controlled surgical instrument and/or a portion of the robotic system that may be used to operably control a surgical instrument. For example, the interchangeable shaft assemblies disclosed herein may be employed with various robotic systems, instruments, components and methods disclosed in U.S. Patent Application Serial No. 13/118,241, entitled SURGICAL STAPLING INSTRUMENTS WITH ROTATABLE STAPLE DEPLOYMENT ARRANGEMENTS, now U.S. Patent Application Publication No. US 2012/0298719..

[0006] The housing 12 depicted in FIGS. 1-3 is shown in connection with an interchangeable shaft assembly 200 that includes an end effector 300 that comprises a surgical cutting and fastening device that is configured to operably support a surgical staple cartridge 304 therein. The housing 12 may be configured for use in connection with interchangeable shaft assemblies that include end effectors that are adapted to support different sizes and types of staple cartridges, have different shaft lengths, sizes, and types, etc. In addition, the housing 12 may also be effectively employed with a variety of other interchangeable shaft assemblies including those assemblies that are configured to apply other motions and forms of energy such as radio frequency (RF) energy, ultrasonic energy and/or motion to end effector arrangements adapted for use in connection with various surgical applications and procedures. Furthermore, the end effectors, shaft assemblies, handles, surgical instruments, and/or surgical instrument systems can utilize any suitable fastener, or fasteners, to fasten tissue. For instance, a fastener cartridge comprising a plurality of fasteners removably stored therein can be removably inserted into and/or attached to the end effector of a shaft assembly.

[0007] FIG. 1 illustrates the surgical instrument 10 with an interchangeable shaft assembly 200 operably coupled thereto. FIGS. 2 and 3 illustrate attachment of the interchangeable shaft assembly 200 to the housing 12 or handle 14. As can be seen in FIG. 4, the handle 14 comprises a pair of interconnectable handle housing segments 16 and 18 that may be interconnected by screws, snap features, adhesive, etc. In the illustrated arrangement, the handle housing segments 16, 18 cooperate to form a pistol grip portion 19 that can be gripped and manipulated by the clinician. As will be discussed in further detail below, the handle 14 operably supports a plurality of drive systems therein that are configured to generate and apply various control motions to corresponding portions of the interchangeable shaft assembly that is operably attached thereto.

[0008] Referring now to FIG. 4, the handle 14 further includes a frame 20 that operably supports a plurality of drive systems. In particular, the frame 20 operably supports a "first" or closure drive system, generally designated as 30, which may be employed to apply closing

and opening motions to the interchangeable shaft assembly 200 that is operably attached or coupled thereto. The closure drive system 30 includes an actuator in the form of a closure trigger 32 that is pivotally supported by the frame 20. More specifically, as illustrated in FIG. 4, the closure trigger 32 is pivotally coupled to the housing 14 by a pin 33. Such arrangement enables the closure trigger 32 to be manipulated by a clinician such that when the clinician grips the pistol grip portion 19 of the handle 14, the closure trigger 32 may be easily pivoted from a starting or "unactuated" position to an "actuated" position and more particularly to a fully compressed or fully actuated position. The closure trigger 32 may be biased into the unactuated position by spring or other biasing arrangement (not shown). The closure drive system 30 further includes a closure linkage assembly 34 that is pivotally coupled to the closure trigger 32. As can be seen in FIG. 4, the closure linkage assembly 34 includes a first closure link 36 and a second closure link 38 that are pivotally coupled to the closure trigger 32 by a pin 35. The second closure link 38 may also be referred to herein as an "attachment member" and includes a transverse attachment pin 37.

[0009] Still referring to FIG. 4, it can be observed that the first closure link 36 has a locking wall or end 39 thereon that is configured to cooperate with a closure release assembly 60 that is pivotally coupled to the frame 20. The closure release assembly 60 comprises a release button assembly 62 that has a distally protruding locking pawl 64 formed thereon. The release button assembly 62 may be pivoted in a counterclockwise direction by a release spring (not shown). As the clinician depresses the closure trigger 32 from its unactuated position towards the pistol grip portion 19 of the handle 14, the first closure link 36 pivots upward to a point wherein the locking pawl 64 drops into retaining engagement with the locking wall 39 on the first closure link 36 thereby preventing the closure trigger 32 from returning to the unactuated position. See FIG. 18. Thus, the closure release assembly 60 serves to lock the closure trigger 32 in the fully actuated position. When the clinician desires to unlock the closure trigger 32 to permit it to be biased to the unactuated position, the clinician simply pivots the closure release button assembly 62 such that the locking pawl 64 is moved out of engagement with the locking wall 39 on the first closure link 36. When the locking pawl 64 has been moved out of engagement with the first closure link 36, the closure trigger 32 may pivot back to the unactuated position. Other closure trigger locking and release arrangements may also be employed.

[0010] Further to the above, FIGS. 13-15 illustrate the closure trigger 32 in its unactuated position which is associated with an open, or unclamped, configuration of the shaft assembly 200 in which tissue can be positioned between the jaws of the shaft assembly 200. FIGS. 16-18 illustrate the closure trigger 32 in its actuated position which is associated with a closed, or clamped, configuration of the shaft assembly 200 in which tissue is clamped between the jaws of the shaft assembly 200. Upon comparing FIGS. 14 and 17, the reader will appreciate that, when the closure trigger 32 is moved from its unactuated position (FIG. 14) to its actuated position (FIG. 17), the closure release button 62 is pivoted between a first position (FIG. 14) and a second position (FIG. 17). The rotation of the closure release button 62 can be referred to as being an upward rotation; however, at least a portion of the closure release button 62 is being rotated toward the circuit board 100. Referring to FIG. 4, the closure release button 62 can include an arm 61 extending therefrom and a magnetic element 63, such as a permanent magnet mounted to the arm 61. When the closure release button 62 is rotated from its first position to its second position, the magnetic element 63 moves toward the circuit board 100. The circuit board 100 includes at least one sensor configured to detect the movement of the magnetic element 63. A Hall effect sensor 65 can be mounted to the bottom surface of the circuit board 100. The Hall effect sensor 65 is configured to detect changes in a magnetic field surrounding the Hall effect sensor 65 caused by the movement of the magnetic element 63. The Hall effect sensor 65 is in signal communication with a microcontroller 7004 (FIG. 59) which can determine whether the closure release button 62 is in its first position, which is associated with the unactuated position of the closure trigger 32 and the open configuration of the end effector, its second position, which is associated with the actuated position of the closure trigger 32 and the closed configuration of the end effector, and/or any position between the first position and the second position.

[0011] The handle 14 and the frame 20 operably support another drive system referred to herein as a firing drive system 80 that is configured to apply firing motions to corresponding portions of the interchangeable shaft assembly attached thereto. The firing drive system may 80 also be referred to herein as a "second drive system". The firing drive system 80 employs an electric motor 82, located in the pistol grip portion 19 of the handle 14. The motor 82 may be a DC brushed driving motor having a maximum rotation of, approximately, 25,000 RPM. Alternatively, the motor may include a brushless motor, a cordless motor, a synchronous motor, a stepper motor, or any other suitable electric motor. The motor 82 is powered by a power source 90 that may comprise a removable power pack 92. As can be seen in FIG. 4 the power pack 92 may comprise a proximal housing portion 94 that is configured for attachment to a distal housing portion 96. The proximal housing portion 94 and the distal housing portion 96 are configured to operably support a plurality of batteries 98 therein. Batteries 98 may each comprise a Lithium Ion ("LI") or other suitable battery. The distal housing portion 96 is configured for removable operable attachment to a control circuit board assembly 100 which is also operably coupled to the motor 82. A number of batteries 98 may be connected in series may be used as the power source for the surgical instrument 10. In

addition, the power source 90 may be replaceable and/or rechargeable.

[0012] The electric motor 82 includes a rotatable shaft (not shown) that operably interfaces with a gear reducer assembly 84 that is mounted in meshing engagement with a with a set, or rack, of drive teeth 122 on a longitudinally-movable drive member 120. In use, a voltage polarity provided by the power source 90 operates the electric motor 82 in a clockwise direction wherein the voltage polarity applied to the electric motor by the battery can be reversed in order to operate the electric motor 82 in a counter-clockwise direction. When the electric motor 82 is rotated in one direction, the drive member 120 will be axially driven in the distal direction "DD". When the motor 82 is driven in the opposite rotary direction, the drive member 120 will be axially driven in a proximal direction "PD". The handle 14 includes a switch which can be configured to reverse the polarity applied to the electric motor 82 by the power source 90. The handle 14 can also include a sensor that is configured to detect the position of the drive member 120 and/or the direction in which the drive member 120 is being moved.

[0013] Actuation of the motor 82 is controlled by a firing trigger 130 that is pivotally supported on the handle 14. The firing trigger 130 can be pivoted between an unactuated position and an actuated position. The firing trigger 130 is biased into the unactuated position by a spring 132 or other biasing arrangement such that when the clinician releases the firing trigger 130, it is pivoted or otherwise returned to the unactuated position by the spring 132 or biasing arrangement. The firing trigger 130 is positioned "outboard" of the closure trigger 32 as was discussed above. A firing trigger safety button 134 is pivotally mounted to the closure trigger 32 by pin 35. The safety button 134 is positioned between the firing trigger 130 and the closure trigger 32 and has a pivot arm 136 protruding therefrom. See FIG. 4. When the closure trigger 32 is in the unactuated position, the safety button 134 is contained in the handle 14 where the clinician cannot readily access it and move it between a safety position preventing actuation of the firing trigger 130 and a firing position wherein the firing trigger 130 can be fired. As the clinician depresses the closure trigger 32, the safety button 134 and the firing trigger 130 pivot down wherein they can then be manipulated by the clinician.

[0014] As discussed above, the handle 14 includes a closure trigger 32 and a firing trigger 130. Referring to FIGS. 14-18A, the firing trigger 130 is pivotably mounted to the closure trigger 32. The closure trigger 32 includes an arm 31 extending therefrom and the firing trigger 130 is pivotably mounted to the arm 31 about a pivot pin 33. When the closure trigger 32 is moved from its unactuated position (FIG. 14) to its actuated position (FIG. 17), the firing trigger 130 descends downwardly, as outlined above. After the safety button 134 has been moved to its firing position, referring primarily to FIG. 18A, the firing trigger 130 can be depressed to operate the motor of the surgical instrument firing system. The handle 14 can include a tracking system, such as system 800 configured to determine the position of the closure trigger 32 and/or the position of the firing trigger 130. With primary reference to FIGS. 14, 17, and 18A, an exemplary tracking system 800 includes a magnetic element, such as permanent magnet 802which is mounted to an arm 801 extending from the firing trigger 130. The tracking system 800 comprises one or more sensors, such as a first Hall effect sensor 803 and a second Hall effect sensor 804which are configured to track the position of the magnet 802. Upon comparing FIGS. 14 and 17, the reader will appreciate that, when the closure trigger 32 is moved from its unactuated position to its actuated position, the magnet 802 moves between a first position adjacent the first Hall effect sensor 803 and a second position adjacent the second Hall effect sensor 804. Upon comparing FIGS. 17 and 18A, the reader will further appreciate that, when the firing trigger 130 is moved from an unfired position (FIG. 17) to a fired position (FIG. 18A), the magnet 802 moves relative to the second Hall effect sensor 804. The sensors 803 and 804 track the movement of the magnet 802 and are in signal communication with a microcontroller on the circuit board 100. With data from the first sensor 803 and/or the second sensor 804, the microcontroller can determine the position of the magnet 802 along a predefined path and, based on that position, the microcontroller can determine whether the closure trigger 32 is in its unactuated position, its actuated position, or a position therebetween. Similarly, with data from the first sensor 803 and/or the second sensor 804, the microcontroller can determine the position of the magnet 802 along a predefined path and, based on that position, the microcontroller can determine whether the firing trigger 130 is in its unfired position, its fully fired position, or a position therebetween.

[0015] The longitudinally movable drive member 120 has a rack of teeth 122 formed thereon for meshing engagement with a corresponding drive gear 86 of the gear reducer assembly 84. Optionally, a manually-actuatable "bailout" assembly 140 is configured to enable the clinician to manually retract the longitudinally movable drive member 120 should the motor 82 become disabled. An exemplary bailout assembly 140 includes a lever or bailout handle assembly 142 that is configured to be manually pivoted into ratcheting engagement with teeth 124 also provided in the drive member 120. Thus, the clinician can manually retract the drive member 120 by using the bailout handle assembly 142 to ratchet the drive member 120 in the proximal direction "PD". U.S. Patent Application Publication No. US 2010/0089970 discloses bailout arrangements and other components, arrangements and systems that may also be employed with the instruments disclosed herein..

[0016] Turning now to FIGS. 1 and 7, the interchangeable shaft assembly 200 includes a surgical end effector 300 that comprises an elongated channel 302 that is configured to operably support a staple cartridge 304 therein. The end effector 300 further includes an anvil 306 that

is pivotally supported relative to the elongated channel 302. The interchangeable shaft assembly 200 further includes an articulation joint 270 and an articulation lock 350 (FIG. 8) which is configured to releasably hold the end effector 300 in a desired position relative to a shaft axis SA-SA. Details regarding the construction and operation of the end effector 300, the articulation joint 270 and the articulation lock 350 are set forth in U.S. Patent Application Serial No. 13/803,086, filed March 14, 2013, entitled ARTICULATABLE SURGICAL INSTRUMENT COMPRISING AN ARTICULATION LOCK. The entire disclosure of U.S. Patent Application Serial No. 13/803,086, filed March 14, 2013, entitled ARTICULATABLE SURGICAL INSTRUMENT COMPRISING AN ARTICULATION LOCK. As can be seen in FIGS. 7 and 8, the interchangeable shaft assembly 200 further includes a proximal housing or nozzle 201 comprised of nozzle portions 202 and 203. The interchangeable shaft assembly 200 further includes a closure tube 260 which is utilized to close and/or open the anvil 306 of the end effector 300. Primarily referring now to FIGS. 8 and 9, the shaft assembly 200 includes a spine 210 which can be configured to fixably support a shaft frame portion 212 of the articulation lock 350. See FIG. 8. The spine 210 is configured to, one, slidably support a firing member 220 therein and, two, slidably support the closure tube 260 which extends around the spine 210. The spine 210 is also configured to slidably support a proximal articulation driver 230. The articulation driver 230 has a distal end 231 that is configured to operably engage the articulation lock 350. The articulation lock 350 interfaces with an articulation frame 352 that is adapted to operably engage a drive pin (not shown) on the end effector frame (not shown). As indicated above, further details regarding the operation of the articulation lock 350 and the articulation frame may be found in U.S. Patent Application Serial No. 13/803,086. The spine 210 comprises a proximal end 211 which is rotatably supported in a chassis 240. For example, the proximal end 211 of the spine 210 has a thread 214 formed thereon for threaded attachment to a spine bearing 216 configured to be supported within the chassis 240. See FIG. 7. Such an arrangement facilitates rotatable attachment of the spine 210 to the chassis 240 such that the spine 210 may be selectively rotated about a shaft axis SA-SA relative to the chassis 240.

[0017] Referring primarily to FIG. 7, the interchangeable shaft assembly 200 includes a closure shuttle 250 that is slidably supported within the chassis 240 such that it may be axially moved relative thereto. As can be seen in FIGS. 3 and 7, the closure shuttle 250 includes a pair of proximally-protruding hooks 252 that are configured for attachment to the attachment pin 37 that is attached to the second closure link 38 as will be discussed in further detail below. A proximal end 261 of the closure tube 260 is coupled to the closure shuttle 250 for relative rotation thereto. For example, a U shaped connector 263 is inserted into an annular slot 262 in the proximal end 261 of the closure tube 260 and is retained within vertical slots 253 in the closure shuttle 250. See FIG. 7. Such an arrangement serves to attach the closure tube 260 to the closure shuttle 250 for axial travel therewith while enabling the closure tube 260 to rotate relative to the closure shuttle 250 about the shaft axis SA-SA. A closure spring 268 is journaled on the closure tube 260 and serves to bias the closure tube 260 in the proximal direction "PD" which can serve to pivot the closure trigger into the unactuated position when the shaft assembly is operably coupled to the handle 14.

[0018] The interchangeable shaft assembly 200 further includes an articulation joint 270. Other interchangeable shaft assemblies, however, may be used that are not capable of articulation. As can be seen in FIG. 7 the articulation joint 270 includes a double pivot closure sleeve assembly 271. The double pivot closure sleeve assembly 271 includes an end effector closure sleeve assembly 272 having upper and lower distally projecting tangs 273, 274. An end effector closure sleeve assembly 272 includes a horseshoe aperture 275 and a tab 276 for engaging an opening tab on the anvil 306 in the various manners described in U.S. Patent Application Serial No. 13/803,086, filed March 14, 2013, entitled ARTICULATABLE SURGICAL INSTRUMENT COMPRISING AN ARTICULATION LOCK. As described in further detail therein, the horseshoe aperture 275 and tab 276 engage a tab on the anvil when the anvil 306 is opened. An upper double pivot link 277 includes upwardly projecting distal and proximal pivot pins that engage respectively an upper distal pin hole in the upper proximally projecting tang 273 and an upper proximal pin hole in an upper distally projecting tang 264 on the closure tube 260. A lower double pivot link 278 includes upwardly projecting distal and proximal pivot pins that engage respectively a lower distal pin hole in the lower proximally projecting tang 274 and a lower proximal pin hole in the lower distally projecting tang 265. See also FIG. 8.

[0019] In use, the closure tube 260 is translated distally (direction "DD") to close the anvil 306 in response to the actuation of the closure trigger 32. The anvil 306 is closed by distally translating the closure tube 260 and thus the shaft closure sleeve assembly 272, causing it to strike a proximal surface on the anvil 360 in the manner described in the aforementioned reference U.S. Patent Application Serial No. 13/803,086. As was also described in detail in that reference, the anvil 306 is opened by proximally translating the closure tube 260 and the shaft closure sleeve assembly 272, causing tab 276 and the horseshoe aperture 275 to contact and push against the anvil tab to lift the anvil 306. In the anvil-open position, the shaft closure tube 260 is moved to its proximal position.

[0020] As indicated above, the surgical instrument 10 may further include an articulation lock 350 of the types and construction described in further detail in U.S. Patent Application Serial No. 13/803,086 which is configured and operated to selectively lock the end effector 300 in position. Such arrangement enables the end effector 300 to be rotated, or articulated, relative to the shaft closure

tube 260 when the articulation lock 350 is in its unlocked state. In such an unlocked state, the end effector 300 can be positioned and pushed against soft tissue and/or bone surrounding the surgical site within the patient in order to cause the end effector 300 to articulate relative to the closure tube 260. The end effector 300 may also be articulated relative to the closure tube 260 by an articulation driver 230.

[0021] The interchangeable shaft assembly 200 further includes a firing member 220 that is supported for axial travel within the shaft spine 210. The firing member 220 includes an intermediate firing shaft portion 222 that is configured for attachment to a distal cutting portion or knife bar 280. The firing member 220 may also be referred to herein as a "second shaft" and/or a "second shaft assembly". As can be seen in FIGS. 8 and 9, the intermediate firing shaft portion 222 includes a longitudinal slot 223 in the distal end thereof which is configured to receive a tab 284 on the proximal end 282 of the distal knife bar 280. The longitudinal slot 223 and the proximal end 282 are sized and configured to permit relative movement therebetween and comprise a slip joint 286. The slip joint 286 permits the intermediate firing shaft portion 222 of the firing drive 220 to be moved to articulate the end effector 300 without moving, or at least substantially moving, the knife bar 280. Once the end effector 300 has been suitably oriented, the intermediate firing shaft portion 222 can be advanced distally until a proximal sidewall of the longitudinal slot 223 comes into contact with the tab 284 in order to advance the knife bar 280 and fire the staple cartridge positioned within the channel 302 As can be further seen in FIGS. 8 and 9, the shaft spine 210 has an elongate opening or window 213 therein to facilitate assembly and insertion of the intermediate firing shaft portion 222 into the shaft frame 210. Once the intermediate firing shaft portion 222 has been inserted therein, a top frame segment 215 is engaged with the shaft frame 212 to enclose the intermediate firing shaft portion 222 and knife bar 280 therein. Further description of the operation of the firing member 220 may be found in U.S. Patent Application Serial No. 13/803,086.

[0022] The shaft assembly 200 includes a clutch assembly 400 which is configured to selectively and releasably couple the articulation driver 230 to the firing member 220. The clutch assembly 400 includes a lock collar, or sleeve 402, positioned around the firing member 220 wherein the lock sleeve 402 can be rotated between an engaged position in which the lock sleeve 402 couples the articulation driver 360 to the firing member 220 and a disengaged position in which the articulation driver 360 is not operably coupled to the firing member 200. When lock sleeve 402 is in its engaged position, distal movement of the firing member 220 can move the articulation driver 360 distally and, correspondingly, proximal movement of the firing member 220 can move the articulation driver 230 proximally. When lock sleeve 402 is in its disengaged position, movement of the firing member 220 is not transmitted to the articulation driver 230 and, as a result, the firing member 220 can move independently of the articulation driver 230. The articulation driver 230 can be held in position by the articulation lock 350 when the articulation driver 230 is not being moved in the proximal or distal directions by the firing member 220.

[0023] Referring primarily to FIG. 9, the lock sleeve 402 comprises a cylindrical, or an at least substantially cylindrical, body including a longitudinal aperture 403 defined therein configured to receive the firing member 220. The lock sleeve 402 comprises diametrically-opposed, inwardly-facing lock protrusions 404 and an outwardly-facing lock member 406. The lock protrusions 404 are configured to be selectively engaged with the firing member 220. More particularly, when the lock sleeve 402 is in its engaged position, the lock protrusions 404 are positioned within a drive notch 224 defined in the firing member 220 such that a distal pushing force and/or a proximal pulling force can be transmitted from the firing member 220 to the lock sleeve 402. When the lock sleeve 402 is in its engaged position, the second lock member 406 is received within a drive notch 232 defined in the articulation driver 230 such that the distal pushing force and/or the proximal pulling force applied to the lock sleeve 402 can be transmitted to the articulation driver 230. In effect, the firing member 220, the lock sleeve 402, and the articulation driver 230 will move together when the lock sleeve 402 is in its engaged position. On the other hand, when the lock sleeve 402 is in its disengaged position, the lock protrusions 404 is not positioned within the drive notch 224 of the firing member 220 and, as a result, a distal pushing force and/or a proximal pulling force is not transmitted from the firing member 220 to the lock sleeve 402. Correspondingly, the distal pushing force and/or the proximal pulling force are not transmitted to the articulation driver 230. In such circumstances, the firing member 220 can be slid proximally and/or distally relative to the lock sleeve 402 and the proximal articulation driver 230.

[0024] As can be seen in FIGS. 8-12, the shaft assembly 200 further includes a switch drum 500 that is rotatably received on the closure tube 260. The switch drum 500 comprises a hollow shaft segment 502 that has a shaft boss 504 formed thereon for receive an outwardly protruding actuation pin 410 therein. The actuation pin 410 extends through a slot 267 into a longitudinal slot 408 provided in the lock sleeve 402 to facilitate axial movement of the lock sleeve 402 when it is engaged with the articulation driver 230. A rotary torsion spring 420 is configured to engage the boss 504 on the switch drum 500 and a portion of the nozzle housing 203 as shown in FIG. 10 to apply a biasing force to the switch drum 500. The switch drum 500 further comprises at least partially circumferential openings 506 defined therein which, referring to FIGS. 5 and 6, are configured to receive circumferential mounts 204, 205 extending from the nozzle halves 202, 203 and permit relative rotation, but not translation, between the switch drum 500 and the proximal nozzle 201. As can be seen in those Figures, the mounts 204 and 205 also extend through openings 266 in the

closure tube 260 to be seated in recesses 211 in the shaft spine 210. However, rotation of the nozzle 201 to a point where the mounts 204, 205 reach the end of their respective slots 506 in the switch drum 500 will result in rotation of the switch drum 500 about the shaft axis SA-SA. Rotation of the switch drum 500 will ultimately result in the rotation of eth actuation pin 410 and the lock sleeve 402 between its engaged and disengaged positions. Thus, in essence, the nozzle 201 may be employed to operably engage and disengage the articulation drive system with the firing drive system in the various manners described in further detail in U.S. Patent Application Serial No. 13/803,086.

[0025] As also illustrated in FIGS. 8-12, the shaft assembly 200 comprises a slip ring assembly 600 which is configured to conduct electrical power to and/or from the end effector 300 and/or communicate signals to and/or from the end effector 300. The slip ring assembly 600 comprises a proximal connector flange 604 mounted to a chassis flange 242 extending from the chassis 240 and a distal connector flange 601 positioned within a slot defined in the shaft housings 202, 203. The proximal connector flange 604 comprises a first face and the distal connector flange 601 comprises a second face which is positioned adjacent to and movable relative to the first face. The distal connector flange 601 can rotate relative to the proximal connector flange 604 about the shaft axis SA-SA. The proximal connector flange 604 comprises a plurality of concentric, or at least substantially concentric, conductors 602 defined in the first face thereof. A connector 607 is mounted on the proximal side of the connector flange 601 and has a plurality of contacts (not shown) wherein each contact corresponds to and is in electrical contact with one of the conductors 602. Such an arrangement permits relative rotation between the proximal connector flange 604 and the distal connector flange 601 while maintaining electrical contact therebetween. The proximal connector flange 604 includes an electrical connector 606 which places the conductors 602 in signal communication with a shaft circuit board 610 mounted to the shaft chassis 240. A wiring harness comprising a plurality of conductors extends between the electrical connector 606 and the shaft circuit board 610. The electrical connector 606 extend proximally through a connector opening 243 defined in the chassis mounting flange 242. See FIG. 7. U.S. Patent Application Serial No. 13/800,067, entitled STAPLE CARTRIDGE TISSUE THICKNESS SENSOR SYSTEM, filed on March 13, 2013. U.S. Patent Application Serial No. 13/800,025, entitled STAPLE CARTRIDGE TISSUE THICKNESS SENSOR SYSTEM, filed on March 13, 2013. Further details regarding slip ring assembly 600 may be found in U.S. Patent Application Serial No. 13/803,086.

[0026] The shaft assembly 200 includes a proximal portion which is fixably mounted to the handle 14 and a distal portion which is rotatable about a longitudinal axis. The rotatable distal shaft portion can be rotated relative to the proximal portion about the slip ring assembly 600, as discussed above. The distal connector flange 601 of the slip ring assembly 600 is positioned within the rotatable distal shaft portion. Moreover, the switch drum 500 is also positioned within the rotatable distal shaft portion. When the rotatable distal shaft portion is rotated, the distal connector flange 601 and the switch drum 500 are rotated synchronously with one another. In addition, the switch drum 500 can be rotated between a first position and a second position relative to the distal connector flange 601. When the switch drum 500 is in its first position, the articulation drive system is operably disengaged from the firing drive system and, thus, the operation of the firing drive system does not articulate the end effector 300 of the shaft assembly 200. When the switch drum 500 is in its second position, the articulation drive system is operably engaged with the firing drive system and, thus, the operation of the firing drive system articulates the end effector 300 of the shaft assembly 200. When the switch drum 500 is moved between its first position and its second position, the switch drum 500 is moved relative to distal connector flange 601. The shaft assembly 200 comprises at least one sensor configured to detect the position of the switch drum 500. Turning now to FIGS. 11 and 12, the distal connector flange 601 comprises a Hall effect sensor 605 and the switch drum 500 comprises a magnetic element, such as permanent magnet 505. The Hall effect sensor 605 is configured to detect the position of the permanent magnet 505. When the switch drum 500 is rotated between its first position and its second position, the permanent magnet 505 moves relative to the Hall effect sensor 605. The Hall effect sensor 605 detects changes in a magnetic field created when the permanent magnet 505 is moved. The Hall effect sensor 605 is in signal communication with the shaft circuit board 610 and/or the handle circuit board 100. Based on the signal from the Hall effect sensor 605, a microcontroller on the shaft circuit board 610 and/or the handle circuit board 100 can determine whether the articulation drive system is engaged with or disengaged from the firing drive system.

[0027] Referring again to FIGS. 3 and 7, the chassis 240 includes at least one, and preferably two, tapered attachment portions 244 formed thereon that are adapted to be received within corresponding dovetail slots 702 formed within a distal attachment flange portion 700 of the frame 20. Each dovetail slot 702 is tapered or, stated another way, is somewhat V-shaped to seatingly receive the attachment portions 244 therein. As can be further seen in FIGS. 3 and 7, a shaft attachment lug 226 is formed on the proximal end of the intermediate firing shaft 222. As will be discussed in further detail below, when the interchangeable shaft assembly 200 is coupled to the handle 14, the shaft attachment lug 226 is received in a firing shaft attachment cradle 126 formed in the distal end 125 of the longitudinal drive member 120. See FIGS. 3 and 6.

[0028] Various shaft assembly embodiments employ a latch system 710 for removably coupling the shaft as-

sembly 200 to the housing 12 and more specifically to the frame 20. As can be seen in FIG. 7 the latch system 710 includes a lock member or lock yoke 712 that is movably coupled to the chassis 240. In the illustrated embodiment the lock yoke 712 has a U-shape with two spaced downwardly extending legs 714. The legs 714 each have a pivot lug 716 formed thereon that are adapted to be received in corresponding holes 245 formed in the chassis 240. Such arrangement facilitates pivotal attachment of the lock yoke 712 to the chassis 240. The lock yoke 712 includes two proximally protruding lock lugs 714 that are configured for releasable engagement with corresponding lock detents or grooves 704 in the distal attachment flange 700 of the frame 20. See FIG. 3. The lock yoke 712 is biased in the proximal direction by a spring or biasing member (not shown). Actuation of the lock yoke 712 is accomplished by a latch button 722 that is slidably mounted on a latch actuator assembly 720 that is mounted to the chassis 240. The latch button 722 is biased in a proximal direction relative to the lock yoke 712. As will be discussed in further detail below, the lock yoke 712 can be moved to an unlocked position by biasing the latch button the in distal direction which also causes the lock yoke 712 to pivot out of retaining engagement with the distal attachment flange 700 of the frame 20. When the lock yoke 712 is in "retaining engagement" with the distal attachment flange 700 of the frame 20, the lock lugs 716 are retainingly seated within the corresponding lock detents or grooves 704 in the distal attachment flange 700.

[0029] When employing an interchangeable shaft assembly that includes an end effector of the type described herein that is adapted to cut and fasten tissue, as well as other types of end effectors, it may be desirable to prevent inadvertent detachment of the interchangeable shaft assembly from the housing during actuation of the end effector. For example, in use the clinician may actuate the closure trigger 32 to grasp and manipulate the target tissue into a desired position. Once the target tissue is positioned within the end effector 300 in a desired orientation, the clinician may then fully actuate the closure trigger 32 to close the anvil 306 and clamp the target tissue in position for cutting and stapling. In that instance, the first drive system 30 has been fully actuated. After the target tissue has been clamped in the end effector 300, it may be desirable to prevent the inadvertent detachment of the shaft assembly 200 from the housing 12. A latch system 710 is configured to prevent such inadvertent detachment.

[0030] As can be most particularly seen in FIG. 7, the lock yoke 712 includes at least one and preferably two lock hooks 718 that are adapted to contact corresponding lock lug portions 256 that are formed on the closure shuttle 250. Referring to FIGS. 13-15, when the closure shuttle 250 is in an unactuated position (i.e., the first drive system 30 is unactuated and the anvil 306 is open), the lock yoke 712 may be pivoted in a distal direction to unlock the interchangeable shaft assembly 200 from the housing 12. When in that position, the lock hooks 718 do not contact the lock lug portions 256 on the closure shuttle 250. However, when the closure shuttle 250 is moved to an actuated position (i.e., the first drive system 30 is actuated and the anvil 306 is in the closed position), the lock yoke 712 is prevented from being pivoted to an unlocked position. See FIGS. 16-18. Stated another way, if the clinician were to attempt to pivot the lock yoke 712 to an unlocked position or the lock yoke 712 was in advertently bumped or contacted in a manner that might otherwise cause it to pivot distally, the lock hooks 718 on the lock yoke 712 will contact the lock lugs 256 on the closure shuttle 250 and prevent movement of the lock yoke 712 to an unlocked position.

[0031] Attachment of the interchangeable shaft assembly 200 to the handle 14 will now be described with reference to FIG. 3. To commence the coupling process, the clinician positions the chassis 240 of the interchangeable shaft assembly 200 above or adjacent to the distal attachment flange 700 of the frame 20 such that the tapered attachment portions 244 formed on the chassis 240 are aligned with the dovetail slots 702 in the frame 20. The clinician then moves the shaft assembly 200 along an installation axis IA that is perpendicular to the shaft axis SA-SA to seat the attachment portions 244 in "operable engagement" with the corresponding dovetail receiving slots 702. In doing so, the shaft attachment lug 226 on the intermediate firing shaft 222 will also be seated in the cradle 126 in the longitudinally movable drive member 120 and the portions of pin 37 on the second closure link 38 will be seated in the corresponding hooks 252 in the closure yoke 250. As used herein, the term "operable engagement" in the context of two components means that the two components are sufficiently engaged with each other so that upon application of an actuation motion thereto, the components may carry out their intended action, function and/or procedure.

[0032] As discussed above, at least five systems of the interchangeable shaft assembly 200 can be operably coupled with at least five corresponding systems of the handle 14. A first system comprises a frame system which couples and/or aligns the frame or spine of the shaft assembly 200 with the frame 20 of the handle 14. Another system comprises a closure drive system 30 which can operably connect the closure trigger 32 of the handle 14 and the closure tube 260 and the anvil 306 of the shaft assembly 200. The closure tube attachment yoke 250 of the shaft assembly 200 is engaged with the pin 37 on the second closure link 38. Another system comprises the firing drive system 80 which operably connects the firing trigger 130 of the handle 14 with the intermediate firing shaft 222 of the shaft assembly 200. As outlined above, the shaft attachment lug 226 is operably connected with the cradle 126 of the longitudinal drive member 120. Another system comprises an electrical system which, one, signals to a controller in the handle 14, such as microcontroller that the shaft assembly 200 has been operably engaged with the handle 14 and/or,

two, conducts power and/or communication signals between the shaft assembly 200 and the handle 14. For instance, the shaft assembly 200 can include an electrical connector 4010 that is operably mounted to the shaft circuit board 610. The electrical connector 4010 is configured for mating engagement with a corresponding electrical connector 4000 on the handle control board 100. Further details regaining the circuitry and control systems may be found in U.S. Patent Application Serial No. 13/803,086. The fifth system consists of the latching system for releasably locking the shaft assembly 200 to the handle 14.

[0033] Referring again to FIGS. 2 and 3, the handle 14 includes an electrical connector 4000 comprising a plurality of electrical contacts. Turning now to FIG. 59, an exemplary electrical connector 4000 comprises a first contact 4001a, a second contact 4001b, a third contact 4001c, a fourth contact 4001d, a fifth contact 4001e, and a sixth contact 4001f. While the illustrated embodiment utilizes six contacts, other embodiments are envisioned which may utilize more than six contacts or fewer than six contacts. As illustrated in FIG. 59, the first contact 4001a is in electrical communication with a transistor 4008, contacts 4001b-4001e are in electrical communication with a microcontroller 7004, and the sixth contact 4001f is in electrical communication with a ground. One or more of the electrical contacts 4001b-4001e is in electrical communication with one or more output channels of the microcontroller 7004 and can be energized, or have a voltage potential applied thereto, when the handle 1042 is in a powered state. One or more of the electrical contacts 4001b-4001e is in electrical communication with one or more input channels of the microcontroller 7004 and, when the handle 14 is in a powered state, the microcontroller 7004 is configured to detect when a voltage potential is applied to such electrical contacts. When a shaft assembly, such as shaft assembly 200 is assembled to the handle 14, the electrical contacts 4001a-4001f are not in communication with each other. When a shaft assembly is not assembled to the handle 14, however, the electrical contacts 4001a-4001f of the electrical connector 4000 are exposed and, one or more of the contacts 4001a-4001f may be accidentally placed in electrical communication with each other. Such circumstances can arise when one or more of the contacts 4001a-4001f come into contact with an electrically conductive material. When this occurs, the microcontroller 7004 can receive an erroneous input and/or the shaft assembly 200 can receive an erroneous output. To address this issue, the handle 14 may be unpowered when a shaft assembly, such as shaft assembly 200is not attached to the handle 14. Alternatively, the handle 1042 can be powered when a shaft assembly, such as shaft assembly 200 is not attached thereto and the microcontroller 7004 is configured to ignore inputs, or voltage potentials, applied to the contacts in electrical communication with the microcontroller 7004, e.g., contacts 4001b-4001euntil a shaft assembly is attached to the handle 14. Even though the microcontroller 7004 may be supplied with power to operate other functionalities of the handle 14, the handle 14 may be in a powered-down state. In a way, the electrical connector 4000 may be in a powered-down state as voltage potentials applied to the electrical contacts 4001b-4001e do not affect the operation of the handle 14. The reader will appreciate that, even though contacts 4001b-4001e are in a powered-down state, the electrical contacts 4001a and 4001f, which are not in electrical communication with the microcontroller 7004, may not be in a powered-down state. For instance, sixth contact 4001f may remain in electrical communication with a ground regardless of whether the handle 14 is in a powered-up or a powered-down state. Furthermore, the transistor 4008, and/or any other suitable arrangement of transistors, such as transistor 4010 and/or switches may be configured to control the supply of power from a power source 4004, such as a battery 90 within the handle 14 to the first electrical contact 4001a regardless of whether the handle 14 is in a powered-up or a powered-down state. The shaft assembly 200 can be configured to change the state of the transistor 4008 when the shaft assembly 200 is engaged with the handle 14. For example, a Hall effect sensor 4002 can be configured to switch the state of transistor 4010 which, as a result, switches the state of transistor 4008 and ultimately supplies power from power source 4004 to first contact 4001a. In this way, both the power circuits and the signal circuits to the connector 4000 are powered down when a shaft assembly is not installed to the handle 14 and powered up when a shaft assembly is installed to the handle 14.

[0034] Referring again to FIG. 59, the handle 14 includes the Hall effect sensor 4002 which is configured to detect a detectable element, such as a magnetic element 4007 (FIG. 3)on a shaft assembly, such as shaft assembly 200when the shaft assembly is coupled to the handle 14. The Hall effect sensor 4002 is powered by a power source 4006, such as a batterywhich, in effect, amplifies the detection signal of the Hall effect sensor 4002 and communicates with an input channel of the microcontroller 7004 via the circuit illustrated in FIG. 59. Once the microcontroller 7004 has received an input indicating that a shaft assembly has been at least partially coupled to the handle 14, and that, as a result, the electrical contacts 4001a-4001f are no longer exposed, the microcontroller 7004 can enter into its normal, or powered-up, operating state. In such an operating state, the microcontroller 7004 will evaluate the signals transmitted to one or more of the contacts 4001b-4001e from the shaft assembly and/or transmit signals to the shaft assembly through one or more of the contacts 4001b-4001e in normal use thereof. The shaft assembly 1200 may have to be fully seated before the Hall effect sensor 4002 can detect the magnetic element 4007. While a Hall effect sensor 4002 can be utilized to detect the presence of the shaft assembly 200, any suitable system of sensors and/or switches can be utilized to detect whether a shaft assembly has been assembled to the handle 14. In this way, both the power

circuits and the signal circuits to the connector 4000 can be powered down when a shaft assembly is not installed to the handle 14 and powered up when a shaft assembly is installed to the handle 14.

[0035] Any number of magnetic sensing elements may be employed to detect whether a shaft assembly has been assembled to the handle 14. For example, the technologies used for magnetic field sensing include search coil, fluxgate, optically pumped, nuclear precession, SQUID, Hall-effect, anisotropic magnetoresistance, giant magnetoresistance, magnetic tunnel junctions, giant magnetoimpedance, magnetostrictive/piezoelectric composites, magnetodiode, magnetotransistor, fiber optic, magnetooptic, and microelectromechanical systems-based magnetic sensors, among others.

[0036] Referring to FIG. 59, the microcontroller 7004 generally comprises a microprocessor ("processor") and one or more memory units operationally coupled to the processor. By executing instruction code stored in the memory, the processor controls various components of the surgical instrument, such as the motor, various drive systems, and/or a user display. The microcontroller 7004 may be implemented using integrated and/or discrete hardware elements, software elements, and/or a combination of both. Examples of integrated hardware elements include processors, microprocessors, microcontrollers, integrated circuits, application specific integrated circuits (ASIC), programmable logic devices (PLD), digital signal processors (DSP), field programmable gate arrays (FPGA), logic gates, registers, semiconductor devices, chips, microchips, chip sets, microcontrollers, system-on-chip (SoC), and/or system-in-package (SIP). Examples of discrete hardware elements may include circuits and/or circuit elements such as logic gates, field effect transistors, bipolar transistors, resistors, capacitors, inductors, and/or relays. The microcontroller 7004 may include a hybrid circuit comprising discrete and integrated circuit elements or components on one or more substrates.

[0037] Referring to FIG. 59, the microcontroller 7004 may be an LM 4F230H5QR, available from Texas Instruments. The Texas Instruments LM4F230H5QR is an ARM Cortex-M4F Processor Core comprising on-chip memory of 256 KB single-cycle flash memory, or other non-volatile memory, up to 40 MHz, a prefetch buffer to improve performance above 40 MHz, a 32 KB single-cycle serial random access memory (SRAM), internal read-only memory (ROM) loaded with StellarisWare® software, 2KB electrically erasable programmable read-only memory (EEPROM), one or more pulse width modulation (PWM) modules, one or more quadrature encoder inputs (QEI) analog, one or more 12-bit Analog-to-Digital Converters (ADC) with 12 analog input channels, among other features that are readily available. Other microcontrollers may be readily substituted for use with the present disclosure. Accordingly, the present disclosure should not be limited in this context.

[0038] As discussed above, the handle 14 and/or the shaft assembly 200 include systems and configurations configured to prevent, or at least reduce the possibility of, the contacts of the handle electrical connector 4000 and/or the contacts of the shaft electrical connector 4010 from becoming shorted out when the shaft assembly 200 is not assembled, or completely assembled, to the handle 14. Referring to FIG. 3, the handle electrical connector 4000 is at least partially recessed within a cavity 4009 defined in the handle frame 20. The six contacts 4001a-4001f of the electrical connector 4000 are completely recessed within the cavity 4009. Such arrangements reduce the possibility of an object accidentally contacting one or more of the contacts 4001a-4001f. Similarly, the shaft electrical connector 4010 are positioned within a recess defined in the shaft chassis 240 which reduces the possibility of an object accidentally contacting one or more of the contacts 4011a-4011f of the shaft electrical connector 4010. With regard to the particular embodiment depicted in FIG. 3, the shaft contacts 4011a-4011f comprise male contacts. Each shaft contact 4011a-4011f may comprise a flexible projection extending therefrom which can be configured to engage a corresponding handle contact 4001a-4001f. The handle contacts 4001a-4001f comprise female contacts. Each handle contact 4001a-4001f can comprise a flat surface against which the male shaft contacts 4001a-4001f can wipe, or slide, and maintain an electrically conductive interface therebetween. The direction in which the shaft assembly 200 is assembled to the handle 14 is parallel to, or at least substantially parallel to, the handle contacts 4001a-4001f such that the shaft contacts 4011a-4011f slide against the handle contacts 4001a-4001f when the shaft assembly 200 is assembled to the handle 14. Alternatively, the handle contacts 4001a-4001f can comprise male contacts and the shaft contacts 4011a-4011f can comprise female contacts. More generally, the handle contacts 4001a-4001f and the shaft contacts 4011a-4011f can comprise any suitable arrangement of contacts.

[0039] The handle 14 comprises a connector guard configured to at least partially cover the handle electrical connector 4000 and/or a connector guard configured to at least partially cover the shaft electrical connector 4010. A connector guard prevents, or at least reduces the possibility of, an object accidentally touching the contacts of an electrical connector when the shaft assembly is not assembled to, or only partially assembled to, the handle. The connector guard can be movable. For instance, the connector guard can be moved between a guarded position in which it at least partially guards a connector and an unguarded position in which it does not guard, or at least guards less of, the connector. The connector guard can be displaced as the shaft assembly is being assembled to the handle. For instance, if the handle comprises a handle connector guard, the shaft assembly can contact and displace the handle connector guard as the shaft assembly is being assembled to the handle. Similarly, if the shaft assembly comprises a shaft connector guard, the handle can contact and displace the shaft connector

guard as the shaft assembly is being assembled to the handle. The connector guard can comprise a door, and the door can comprise a beveled surface which, when contacted by the handle or shaft, facilitates the displacement of the door in a certain direction. The connector guard can be translated and/or rotated. The connector guard can comprise at least one film which covers the contacts of an electrical connector and, when the shaft assembly is assembled to the handle, the film is ruptured. For example, the male contacts of a connector can penetrate the film before engaging the corresponding contacts positioned underneath the film.

[0040] As described above, the surgical instrument includes a system which can selectively power-up, or activate, the contacts of an electrical connector, such as the electrical connector 4000. The contacts can be transitioned between an unactivated condition and an activated condition. The contacts can be transitioned between a monitored condition, a deactivated condition, and an activated condition. For instance, the microcontroller 7004can monitor the contacts 4001a-4001f when a shaft assembly has not been assembled to the handle 14 to determine whether one or more of the contacts 4001a-4001f may have been shorted. For example, the microcontroller 7004 is configured to apply a low voltage potential to each of the contacts 4001a-4001f and assess whether only a minimal resistance is present at each of the contacts. Such an operating state can comprise the monitored condition. In the event that the resistance detected at a contact is high, or above a threshold resistance, the microcontroller 7004 deactivates that contact, more than one contact, or, alternatively, all of the contacts. Such an operating state can comprise the deactivated condition. If a shaft assembly is assembled to the handle 14 and it is detected by the microcontroller 7004, as discussed above, the microcontroller 7004 increases the voltage potential to the contacts 4001a-4001f. Such an operating state can comprise the activated condition.

[0041] The various shaft assemblies disclosed herein may employ sensors and various other components that require electrical communication with the controller in the housing. These shaft assemblies generally are configured to be able to rotate relative to the housing necessitating a connection that facilitates such electrical communication between two or more components that may rotate relative to each other. When employing end effectors of the types disclosed herein, the connector arrangements must be relatively robust in nature while also being somewhat compact to fit into the shaft assembly connector portion.

[0042] FIGS. 19-22 depict one form of electric coupler or slip ring connector 1600 that may be employed with, for example an interchangeable shaft assembly 1200 or a variety of other applications that require electrical connections between components that rotate relative to each other. The shaft assembly 1200 is similar to shaft assembly 200 described herein and includes a closure tube or outer shaft 1260 and a proximal nozzle 1201 (the upper half of nozzle 1201 is omitted for clarity). In the illustrated example, the outer shaft 1260 is mounted on a shaft spine 1210 such that the outer tube 1260 is selectively axially movable thereon. The proximal ends of the shaft spine 1210 and the outer tube 1260 are rotatably coupled to a chassis 1240 for rotation relative thereto about a shaft axis SA-SA. As was discussed above, the proximal nozzle 1201 includes mounts or mounting lugs 1204 (FIG. 20) that protrude inwardly from the nozzle portions and extend through corresponding openings 1266 in the outer tube 1260 to be seated in corresponding recesses 1211 in the shaft spine 1210. Thus, to rotate the outer shaft 1260 and spine shaft 1210 and ultimately an end effector (not shown) coupled thereto about the shaft axis SA-SA relative to the chassis 1240, the clinician simply rotates the nozzle 1201 as represented by arrows "R" in FIG. 19.

[0043] When sensors are employed at the end effector or at locations within or on the shaft assembly for example, conductors such as wires and/or traces (not shown) are received or mounted within the outer tube 1260 or could even be routed along the outer tube 1260 from the sensors to a distal electrical component 1800 mounted within the nozzle 1201. Thus, the distal electrical component 1800 is rotatable with the nozzle 1201 about the shaft axis SA-SA. In the embodiment illustrated in FIG. 20, the electrical component 1800 comprises a connector, battery, etc. that includes contacts 1802, 1804, 1806, and 1808 that are laterally displaced from each other.

[0044] The slip ring connector 1600 further includes a mounting member 1610 that includes a cylindrical body portion 1612 that defines an annular mounting surface 1613. A distal flange 1614 may be formed on at least one end of the cylindrical body portion 1612. The body portion 1612 of the mounting member 1610 is sized to be non-rotatably mounted on a mounting hub 1241 on the chassis 1240. In the illustrated embodiment, one distal flange 1614 is provided on one end of the body portion 1612. A second flange 1243 is formed on the chassis 1240 such that when the body portion 1612 is fixedly (non-rotatably) mounted thereon, the second flange 1243 abuts the proximal end of the body portion 1612.

[0045] The slip ring connector 1600 also employs a unique and novel annular circuit trace assembly 1620 that is wrapped around the annular mounting surface 1613 of the body portion 1612 such that it is received between the first and second flanges 1614 and 1243. Referring now to FIGS. 21 and 22, the circuit trace assembly 1620 comprise an adhesive-backed flexible substrate 1622 that is wrapped around the circumference of the body portion 1612 (i.e., the annular mounting surface 1613). Prior to being wrapped around the body portion 1612, the flexible substrate 1622 has a "T-shape" with a first annular portion 1624 and a lead portion 1626. As can also be seen in FIGS. 19-21, the circuit trace assembly 1620 further includes circuit traces 1630, 1640, 1650, 1660 that comprise electrically-conductive gold-plated traces. However, other electrically-conductive materials may also be used. Each electrically-conductive circuit

trace includes an "annular portion" that will form an annular part of the trace when the substrate is wrapped around the body portion 1612 as well as another "lead portion" that extends transversely from or perpendicular from the annular portion. More specifically, referring to FIG. 22, first electrically-conductive circuit trace 1630 has a first annular portion 1632 and first lead portion 1634. The second electrically-conductive circuit trace 1640 has a second annular portion 1642 and a second lead portion 1644 extending transversely or perpendicularly therefrom. The third electrically conductive circuit trace 1650 has a third annular portion 1652 and a third lead portion 1654 extending transversely or perpendicularly therefrom. The fourth electrically-conductive circuit trace has a fourth annular portion 1662 and a fourth lead portion 1664 extending transversely or perpendicularly therefrom. The electrically-conductive circuit traces 1630, 1640, 1650, 1660 may be applied to the flexible substrate 1622 while the substrate is in a planar orientation (i.e., prior to being wrapped onto the annular body portion 1612 of the mounting member 1610) using conventional manufacturing techniques. As can be seen in FIG. 22, the annular portions 1632, 1642, 1652, 1662 are laterally displaced from each other. Likewise, the lead portions 1634, 1644, 1654, 1664 are laterally displaced from each other.

[0046] When the circuit trace assembly 1620 is wrapped around the annular mounting surface 1613 and attached thereto by adhesive, double-stick tape, etc., the ends of the portion of the substrate that contains the annular portions 1632, 1642, 1652, 1664 are butted together such that the annular portions 1632, 1642, 1652, 1664 form discrete continuous annular electrically-conductive paths 1636, 1646, 1656, 1666, respectively that extend around the shaft axis SA-SA. Thus, the electrically-conductive paths 1636, 1646, 1656, and 1666 are laterally or axially displaced from each other along the shaft axis SA-SA. The lead portion 1626 may extend through a slot 1245 in the flange 1243 and be electrically coupled to a circuit board (see e.g., FIG. 7 - circuit board 610) or other suitable electrical component(s).

[0047] In the depicted embodiment, the electrical component 1800 is mounted within the nozzle 1261 for rotation about the mounting member 1610 such that: contact 1802 is in constant electrical contact with the first annular electrically-conductive path 1636; contact 1804 is in constant electrical contact with the second annular electrically-conductive path 1646; contact 1806 is in constant electrical contact with the third annular electrically-conductive path 1656; and contact 1808 is in constant electrical contact with the fourth electrically-conductive path 1666. It will be understood however, that the various advantages of the slip ring connector 1600 may also be obtained in applications wherein the mounting member 1610 is supported for rotation about the shaft axis SA-SA and the electrical component 1800 is fixedly mounted relative thereto. It will be further appreciated that the slip ring connector 1600 may be effectively employed in connection with a variety of different components and applications outside the field of surgery wherein it is desirable to provide electrical connections between components that rotate relative to each other.

[0048] The slip ring connector 1600 comprises a radial slip ring that provides a conductive contact means of passing signal(s) and power to and from any radial position and after shaft rotation. In applications wherein the electrical component comprises a battery contact, the battery contact position can be situated relative to the mounting member to minimize any tolerance stack up between those components. The coupler arrangement represents a low cost coupling arrangement that can be assembled with minimal manufacturing costs. The gold plated traces may also minimize the likelihood of corrosion. The unique and novel contact arrangement facilitates complete clockwise and counterclockwise rotation about the shaft axis SA-SA while remaining in electrical contact with the corresponding annular electrically-conductive paths.

[0049] FIGS. 23-25 depict one form of electric coupler or slip ring connector 1600' that may be employed with, for example an interchangeable shaft assembly 1200' or a variety of other applications that require electrical connections between components that rotate relative to each other. The shaft assembly 1200' is similar to shaft assembly 1200 described herein and includes a closure tube or outer shaft 1260 and a proximal nozzle 1201 (the upper half of nozzle 1201 is omitted for clarity). In the illustrated example, the outer shaft 1260 is mounted on a shaft spine 1210 such that the outer tube 1260 may be selectively axially movable thereon. The proximal ends of the shaft spine 1210 and the outer tube 1260 are rotatably coupled to a chassis 1240' for rotation relative thereto about a shaft axis SA-SA. As was discussed above, the proximal nozzle 1201 includes mounts or mounting lugs that protrude inwardly from the nozzle portions and extend through corresponding openings 1266 in the outer tube 1260 to be seated in corresponding recesses 1211 in the shaft spine 1210. Thus, to rotate the outer shaft 1260 and spine shaft 1210 and ultimately an end effector (not shown) coupled thereto about the shaft axis SA-SA relative to the chassis 1240', the clinician simply rotates the nozzle 1201 as represented by arrows "R" in FIG. 23.

[0050] When sensors are employed at the end effector or at locations within or on the shaft assembly, conductors such as wires and/or traces (not shown) are received or mounted within the outer tube 1260 or could even be routed along the outer tube 1260 from the sensors to a distal electrical component 1800' mounted within the nozzle 1201. Thus, the distal electrical component 1800' is rotatable with the nozzle 1201 and the wires/traces attached thereto. In the embodiment illustrated in FIG. 23, the electrical component 1800 comprises a connector, battery, etc. that includes contacts 1802', 1804', 1806', 1808' that are laterally displaced from each other.

[0051] The slip ring connector 1600' further includes a

laminated slip ring assembly 1610' that is fabricated from a plurality of conductive rings that are laminated together. More specifically and with reference to FIG. 25, one form of slip ring assembly 1610' comprises a first non-electrically conductive flange 1670 that forms a distal end of the slip ring assembly 1610'. The flange 1670 is fabricated from a high-heat resistant material. A first electrically conductive ring 1680 is positioned immediately adjacent the first flange 1670. The first electrically conductive ring 1680 comprises a first copper ring 1681 that has a first gold plating 1682 thereon. A second non-electrically conductive ring 1672 is adjacent to the first electrically-conductive ring 1680. A second electrically-conductive ring 1684 is adjacent to the second non-electrically-conductive ring 1672. The second electrically-conductive ring 1684 comprises a second copper ring 1685 that has a second gold plating 1686 thereon. A third non-electrically-conductive ring 1674 is adjacent to the second electrically-conductive ring 1684. A third electrically conductive ring 1688 is adjacent to the third non-electrically conductive ring 1674. The third electrically conductive ring 1688 comprises a third copper ring 1689 that has a third gold plating 1690 thereon. A fourth non-electrically conductive ring 1676 is adjacent to the third electrically-conductive ring 1688. A fourth electrically conductive ring 1692 is adjacent to the fourth non-electrically-conductive ring 1676. The fourth electrically-conductive ring 1692 is adjacent to the fourth non-electrically conductive ring 1676. A fifth non-electrically conductive ring 1678 is adjacent to the fourth electrically-conductive ring 1692 and forms the proximal end of the mounting member 1610'. The non-electrically conductive rings 1670, 1672, 1674, 1676, and 1678 may be fabricated from the same material. The first electrically-conductive ring 1680 forms a first annular electrically-conductive pathway 1700. The second electrically-conductive ring 1682 forms a second annular electrically-conductive pathway 1702 that is laterally or axially spaced from the first annular electrically-conductive pathway 1700. The third electrically-conductive ring 1688 forms a third annular electrically conductive pathway 1704 that is laterally or axially spaced from the second annular electrically-conductive pathway1702. The fourth electrically-conductive ring 1692 forms a fourth annular electrically-conductive pathway 1706 that is laterally or axially spaced from the third annular electrically-conductive pathway 1704. The slip ring assembly 1610' comprises a one piece molded high temperature resistant, non-conductive material with molded in channels for electromagnetic forming (EMF - Magneformed) copper rings.

[0052] As can be seen in FIG. 24, the slip ring connector 1600' further includes a non-conductive transverse mounting member 1720 that is adapted to be inserted into axially-aligned notches 1710 in each of the rings 1670, 1680, 1672, 1684, 1674, 1688, 1676, 1692, and 1678. The transverse mounting member 1720 has a first circuit trace 1722 thereon that is adapted for electrical contact with the first annular electrically-conductive pathway 1700 when the transverse mounting member 1672 is mounted within the notches 1710. Likewise, a second circuit trace 1724 is printed on the transverse mounting member 1720 and is configured for electrical contact with the second annular electrically conductive pathway 1702. A third circuit trace 1726 is printed on the transverse mounting member 1720 and is configured for electrical contact with the third annular electrically-conductive pathway 1704. A fourth circuit trace 1728 is printed on the transverse mounting member 1720 and is configured for electrical contact with the fourth annular electrically-conductive pathway 1706.

[0053] In the arrangement depicted in FIGS. 23-25, the slip ring assembly 1610' is configured to be fixedly (non-rotatably) received on a mounting hub 1241' on the chassis 1240'. The transverse mounting member 1720 is received within groove 1243' formed in the mounting hub 1241' which acts as a keyway for the transverse mounting member 1720 and which serves to prevent the slip ring assembly 1610' from rotating relative to the mounting hub 1241'.

[0054] In the depicted embodiment for example, the electrical component 1800' is mounted within the nozzle 1201 for rotation about the slip ring assembly 1610' such that: contact 1802' is in constant electrical contact with the first annular electrically-conductive path 1700; contact 1804' is in constant electrical contact with the second annular electrically-conductive path 1702; contact 1806' is in constant electrical contact with the third annular electrically-conductive path 1704; and contact 1808' is in constant electrical contact with the fourth electrically-conductive path 1706. It will be understood however, that the various advantages of the slip ring connector 1600' may also be obtained in applications wherein the slip ring assembly 1610' is supported for rotation about the shaft axis SA-SA and the electrical component 1800' is fixedly mounted relative thereto. It will be further appreciated that the slip ring connector 1600' may be effectively employed in connection with a variety of different components and applications outside the field of surgery wherein it is desirable to provide electrical connections between components that rotate relative to each other.

[0055] The slip ring connector 1600' comprises a radial slip ring that provides a conductive contact means of passing signal(s) and power to and from any radial position and after shaft rotation. In applications wherein the electrical component comprises a battery contact, the battery contact position can be situated relative to the mounting member to minimize any tolerance stack-up between those components. The slip ring connector 1600' represents a low cost coupling arrangement that can be assembled with minimal manufacturing costs. The gold plated traces may also minimize the likelihood of corrosion. The unique and novel contact arrangement facilitates complete clockwise and counterclockwise rotation about the shaft axis while remaining in electrical contact with the corresponding annular electrically-conductive paths.

[0056] FIGS. 26-30 depict another form of electric coupler or slip ring connector 1600" that may be employed with, for example an interchangeable shaft assembly 1200" or a variety of other applications that require electrical connections between components that rotate relative to each other. The shaft assembly 1200" is similar to shaft assemblies 1200 and/or 1200' described herein except for the differences noted below. The shaft assembly 1200" includes a closure tube or outer shaft 1260 and a proximal nozzle 1201 (the upper half of nozzle 1201 is omitted for clarity). In the illustrated example, the outer shaft 1260 is mounted on a shaft spine 1210 such that the outer tube 1260 is selectively axially movable thereon. The proximal ends of the shaft spine 1210 and the outer tube 1260 are rotatably coupled to a chassis 1240" for rotation relative thereto about a shaft axis SA-SA. As was discussed above, the proximal nozzle 1201 includes mounts or mounting lugs that protrude inwardly from the nozzle portions and extend through corresponding openings 1266 in the outer tube 1260 to be seated in corresponding recesses 1211 in the shaft spine 1210. Thus, to rotate the outer shaft 1260 and spine shaft 1210 and presumably an end effector (not shown) coupled thereto about the shaft axis SA-SA relative to the chassis 1240", the clinician simply rotates the nozzle 1201.

[0057] When sensors are employed at the end effector or at locations within or on the shaft assembly for example, conductors such as wires and/or traces (not shown) are received or mounted within the outer tube 1260 or could even be routed along the outer tube 1260 from the sensors to a distal electrical component 1800"' mounted within the nozzle 1201. In the illustrated embodimentthe electrical component 1800" is mounted in the nozzle 1201 such that it is substantially aligned with the shaft axis SA-SA. The distal electrical component 1800" is rotatable about the shaft axis SA-SA with the nozzle 1201 and the wires/traces attached thereto. The electrical component 1800" may comprise a connector, a battery, etc. that includes four contacts 1802", 1804", 1806", 1808" that are laterally displaced from each other.

[0058] The slip ring connector 1600" further includes a slip ring assembly 1610" that includes a base ring 1900 that is fabricated from a non-electrically conductive material and has a central mounting bore 1902 therethrough. The mounting bore 1902 has a flat surface 1904 and is configured for non-rotational attachment to a mounting flange assembly 1930 that is supported at a distal end of the chassis 1240". A distal side 1905 of the base ring 1900 has a series of concentric electrical-conductive rings 1906, 1908, 1910, and 1912 attached or laminated thereto. The rings 1906, 1908, 1910, and 1912 may be attached to the base ring 1900 by any suitable method.

[0059] The base ring 1900 further includes a circuit trace extending therethrough that is coupled to each of the electrically-conductive rings 1906, 1908, 1910, and 1912. Referring now to FIGS. 28-30, a first circuit trace 1922 extends through a first hole 1920 in the base ring 1900 and is coupled to the first electrically conductive ring 1906. The first circuit trace 1922 terminates in a first proximal contact portion 1924 on the proximal side 1907 of the base ring 1900. See FIG. 30. Similarly, a second circuit trace 1928 extends through a second hole 1926 in the base ring 1900 and is coupled to the second electrically-conductive ring 1908. The second circuit trace 1928 terminates in a second proximal contact 1930 on the proximal side 1907 of the base ring 1900. A third circuit trace 1934 extends through a third hole 1932 in the base ring and is attached to the third electrically-conductive ring 1910. The third circuit trace 1934 terminates in a third proximal contact 1936 on the proximal side 1907 of the base ring. A fourth circuit trace 1940 extends through a fourth hole 1938 in the base ring 1900 to be attached to the fourth electrically-conductive ring 1912. The fourth circuit trace 1940 terminates in a fourth proximal contact 1942 on the proximal side 1907 of the base ring 1900.

[0060] Referring now to FIG. 27, the base ring 1900 is configured to be non-rotatably supported within the nozzle 1201 by a mounting flange 1950 that is non-rotatably coupled to the mounting hub portion 1241" of the chassis 1240". The mounting hub portion 1241" is formed with a flat surface 1243" for supporting a transverse mounting member of the type described above that includes a plurality (preferably four) leads that may be coupled to a circuit board or other corresponding electrical components supported on the chassis in the various manners and arrangements described herein as well as in U.S. Patent Application Serial No. 13/803,086. The transverse support member has been omitted for clarity in FIGS. 26 and 27. However, as can be seen in FIGS. 26 and 27, the mounting flange 1950 has a notch 1952 therein that is adapted to engage a portion of the flat surface 1243" on the mounting hub portion 1241". As can be seen in FIG. 27, the mounting flange 1950 further includes a flange hub portion 1954 that comprises a series of spring tabs 1956 that serve to fixedly attach the base ring 1900 to the mounting flange 1950. It will be understood that the closure tube 1260 and spine 1210 extend through the flange hub 1954 and are rotatable relative thereto with the nozzle 1201.

[0061] In the depicted embodiment, the electrical component 1800" is mounted within the nozzle 1201 for rotation about the slip ring assembly 1610" such that contact 1802" in the component 1800" is in constant electrical contact with rings 1906; contact 1804" is in contact with ring 1908; contact 1806" is in contact with ring 1910; and contact 1808" is in contact with ring 1912 even when the nozzle 1201 is rotated relative to the chassis 1240". It will be understood however, that the various advantages of the slip ring connector 1600" may also be obtained in applications wherein the slip ring assembly 1610" is supported for rotation about the shaft axis SA-SA and the electrical component 1800" is fixedly mounted relative thereto. It will be further appreciated that the slip ring connector 1600" may be effectively employed in connection with a variety of different components and applica-

tions outside the field of surgery wherein it is desirable to provide electrical connections between components that rotate relative to each other.

[0062] The slip ring connector 1600" comprises a radial slip ring that provides a conductive contact means of passing signal(s) and power to and from any radial position and after shaft rotation. In applications wherein the electrical component comprises a battery contact, the battery contact position can be situated relative to the mounting member to minimize any tolerance stack-up between those components. The slip ring connector 1600" represents a low cost and compact coupling arrangement that can be assembled with minimal manufacturing costs. The unique and novel contact arrangement facilitates complete clockwise and counterclockwise rotation about the shaft axis while remaining in electrical contact with the corresponding annular electrically-conductive rings.

[0063] FIGS. 31-36 generally depict a motor-driven surgical fastening and cutting instrument 2000. As illustrated in FIGS. 31 and 32, the surgical instrument 2000 includes a handle assembly 2002, a shaft assembly 2004, and a power assembly 2006 (or "power source" or "power pack"). The shaft assembly 2004 includes an end effector 2008 which can be configured to act as an endocutter for clamping, severing, and/or stapling tissue, although, in other instances, different types of end effectors may be used, such as end effectors for other types of surgical devices, graspers, cutters, staplers, clip appliers, access devices, drug/gene therapy devices, ultrasound devices, RF device, and/or laser devices. Several RF devices may be found in U.S. Patent No. 5,403,312, entitled ELECTROSURGICAL HEMOSTATIC DEVICE, which issued on April 4, 1995, and U.S. Patent Application Serial No. 12/031,573, entitled SURGICAL FASTENING AND CUTTING INSTRUMENT HAVING RF ELECTRODES, filed February 14, 2008.

[0064] Referring primarily to FIGS. 32 and 33, the handle assembly 2002 can be employed with a plurality of interchangeable shaft assemblies such as the shaft assembly 2004. Such interchangeable shaft assemblies comprise surgical end effectors such as the end effector 2008 that can be configured to perform one or more surgical tasks or procedures. Examples of suitable interchangeable shaft assemblies are disclosed in U.S. Provisional Patent Application Serial No. 61/782,866, entitled CONTROL SYSTEM OF A SURGICAL INSTRUMENT, filed March 14, 2013.

[0065] Referring primarily to FIG. 32, the handle assembly 2002 comprises a housing 2010 that consists of a handle 2012 that may be configured to be grasped, manipulated and actuated by a clinician. However, it will be understood that the various unique and novel arrangements of the various forms of interchangeable shaft assemblies disclosed herein also may be effectively employed in connection with robotically-controlled surgical systems. Thus, the term "housing" also may encompass a housing or similar portion of a robotic system that houses or otherwise operably supports at least one drive system that is configured to generate and apply at least one control motion which could be used to actuate the interchangeable shaft assemblies disclosed herein and their respective equivalents. For example, the interchangeable shaft assemblies disclosed herein may be employed with various robotic systems, instruments, components and methods disclosed in U.S. Patent Application Serial No. 13/118,241, entitled SURGICAL STAPLING INSTRUMENTS WITH ROTATABLE STAPLE DEPLOYMENT ARRANGEMENTS, now U.S. Patent Application Publication No. 2012/0298719.

[0066] Referring again to FIG. 32, the handle assembly 2002 operably supports a plurality of drive systems therein that can be configured to generate and apply various control motions to corresponding portions of the interchangeable shaft assembly that is operably attached thereto. For example, the handle assembly 2002 operably supports a first or closure drive system, which may be employed to apply closing and opening motions to the shaft assembly 2004 while operably attached or coupled to the handle assembly 2002. The handle assembly 2002 operably supports a firing drive system that can be configured to apply firing motions to corresponding portions of the interchangeable shaft assembly attached thereto.

[0067] Referring primarily to FIG. 33, the handle assembly 2002 includes a motor 2014 which can be controlled by a motor driver 2015 and can be employed by the firing system of the surgical instrument 2000. The motor 2014 may be a DC brushed driving motor having a maximum rotation of, approximately, 25,000 RPM. Alternatively, the motor 2014 may include a brushless motor, a cordless motor, a synchronous motor, a stepper motor, or any other suitable electric motor. The motor driver 2015 may comprise an H-Bridge FET 2019, as illustrated in FIG. 33. The motor 2014 is powered by the power assembly 2006 (FIG. 35), which is releasably mounted to the handle assembly 2002, power assembly 2006 being configured to supply control power to the surgical instrument 2000. The power assembly 2006 comprises a battery 2007 (FIG. 36) which includes a number of battery cells connected in series that can be used as the power source to power the surgical instrument 2000. In such configuration, the power assembly 2006 may be referred to as a battery pack. The battery cells of the power assembly 2006 may be replaceable and/or rechargeable. The battery cells may be Lithium-Ion batteries which can be separably couplable to the power assembly 2006.

[0068] Examples of drive systems and closure systems that are suitable for use with the surgical instrument 2000 are disclosed in U.S. Provisional Patent Application Serial No. 61/782,866, entitled CONTROL SYSTEM OF A SURGICAL INSTRUMENT, and filed March 14, 2013, the entire disclosure of which . For example, the electric motor 2014 includes a rotatable shaft (not shown) that operably interfaces with a gear reducer assembly that can be mounted in meshing engagement with a set, or

rack, of drive teeth on a longitudinally-movable drive member. In use, a voltage polarity provided by the battery 2007 (FIG. 36) operates the electric motor 2014 to drive the longitudinally-movable drive member to effectuate the end effector 2008. For example, the motor 2014 can be configured to drive the longitudinally-movable drive member to advance a firing mechanism to fire staples into tissue captured by the end effector 2008 from a staple cartridge assembled with the end effector 2008 and/or advance a cutting member 2011 (FIG. 34) to cut tissue captured by the end effector 2008.

[0069] The surgical instrument 2000 comprises a lock-out mechanism to prevent a user from coupling incompatible handle assemblies and power assemblies. For example, as illustrated in FIG. 35, the power assembly 2006 includes a mating element 2011. The mating element 2011 is a tab extending from the power assembly 2006. The handle assembly 2002 comprises a corresponding mating element (not shown) for mating engagement with the mating element 2011. Such an arrangement can be useful in preventing a user from coupling incompatible handle assemblies and power assemblies.

[0070] The reader will appreciate that different interchangeable shaft assemblies may possess different power requirements. The power required to advance a cutting member through an end effector and/or to fire staples may depend on the distance traveled by the cutting member, the staple cartridge being used, and/or the type of tissue being treated. That said, the power assembly 2006 can be configured to meet the power requirements of various interchangeable shaft assemblies. For example, as illustrated in FIG. 34, the cutting member 2011 of the shaft assembly 2004 can be configured to travel a distance D1 along the end effector 2008. On the other hand, another interchangeable shaft assembly 2004' may include a cutting member 2011' which can be configured to travel a distance D2, different from the distance D1, along an end effector 2008' of the interchangeable shaft assembly 2004'. The power assembly 2006 can be configured to provide a first power output sufficient to power the motor 2014 to advance the cutting member 2011 the distance D1 while the interchangeable shaft assembly 2004 is coupled to the handle assembly 2002 and to provide a second power output, different from the first power output, which is sufficient to power the motor 2014 to advance the cutting member 2011' the distance D2 while the interchangeable shaft assembly 2004' is coupled to the handle assembly 2002. As illustrated in FIG. 33 and as described below in greater detail, the power assembly 2006 includes a power management controller 2016 (FIG. 36) which is configured to modulate the power output of the power assembly 2006 to deliver a first power output to power the motor 2014 to advance the cutting member 2011 the distance D1 while the interchangeable shaft assembly 2004 is coupled to the handle assembly 2002 and to deliver a second power output to power the motor 2014 to advance the cutting member 2011' the distance D2 while the interchangeable shaft assembly 2004' is coupled to the handle assembly 2002. Such modulation can be beneficial in avoiding transmission of excessive power to the motor 2014 beyond the requirements of an interchangeable shaft assembly that is coupled to the handle assembly 2002.

[0071] Referring again to FIGS. 32-36, the handle assembly 2002 is releasably coupled or attached to an interchangeable shaft assembly such as the shaft assembly 2004. The handle assembly 2002 is releasably coupled or attached to the power assembly 2006. Various coupling means can be utilized to releasably couple the handle assembly 2002 to the shaft assembly 2004 and/or to the power assembly 2006. Exemplary coupling mechanisms are described in U.S. Provisional Patent Application Serial No. 61/782,866, entitled CONTROL SYSTEM OF A SURGICAL INSTRUMENT, and filed March 14, 2013. For example, the shaft assembly 2004 includes a shaft attachment module 2018 (FIG. 32) which further includes a latch actuator assembly that is configured to cooperate with a lock yoke that is pivotally coupled to the shaft attachment module 2018 for selective pivotal travel relative thereto, wherein the lock yoke includes proximally protruding lock lugs that are configured for releasable engagement with corresponding lock detents or grooves formed in a hand assembly attachment module 2020 of the handle assembly 2002.

[0072] Referring now primarily to FIGS. 33-36, the shaft assembly 2004 includes a shaft assembly controller 2022 which communicates with the power management controller 2016 through an interface 2024 while the shaft assembly 2004 and the power assembly 2006 are coupled to the handle assembly 2002. The interface 2024 comprises a first interface portion 2025 which includes one or more electric connectors 2026 for coupling engagement with corresponding shaft assembly electric connectors 2028 and a second interface portion 2027 which includes one or more electric connectors 2030 for coupling engagement with corresponding power assembly electric connectors 2032 to permit electrical communication between the shaft assembly controller 2022 and the power management controller 2016 while the shaft assembly 2004 and the power assembly 2006 are coupled to the handle assembly 2002. One or more communication signals can be transmitted through the interface 2024 to communicate one or more of the power requirements of the attached interchangeable shaft assembly 2004 to the power management controller 2016. In response, the power management controller modulates the power output of the battery 2007 of the power assembly 2006, as described below in greater detail, in accordance with the power requirements of the attached shaft assembly 2004. One or more of the electric connectors 2026, 2028, 2030, and/or 2032 comprises switches which can be activated after mechanical coupling engagement of the handle assembly 2002 to the shaft assembly 2004 and/or to the power assembly 2006 to allow electrical communication between the shaft assembly controller 2022 and the power management controller

2016.

[0073] The interface 2024 facilitates transmission of the one or more communication signals between the power management controller 2016 and the shaft assembly controller 2022 by routing such communication signals through a main controller 2017 (FIG. 33) residing in the handle assembly 2002. Alternatively, the interface 2024 can facilitate a direct line of communication between the power management controller 2016 and the shaft assembly controller 2022 through the handle assembly 2002 while the shaft assembly 2004 and the power assembly 2006 are coupled to the handle assembly 2002.

[0074] The main microcontroller 2017 may be any single core or multicore processor such as those known under the trade name ARM Cortex by Texas Instruments. The surgical instrument 2000 may comprise a power management controller 2016 such as a safety microcontroller platform comprising two microcontroller-based families such as TMS570 and RM4x known under the trade name Hercules ARM Cortex R4, also by Texas Instruments. Nevertheless, other suitable substitutes for microcontrollers and safety processor may be employed, without limitation. The safety processor 1004 may be configured specifically for IEC 61508 and ISO 26262 safety critical applications, among others, to provide advanced integrated safety features while delivering scalable performance, connectivity, and memory options.

[0075] The microcontroller 2017 may be an LM 4F230H5QR, available from Texas Instruments. The Texas Instruments LM4F230H5QR is an ARM Cortex-M4F Processor Core comprising on-chip memory of 256 KB single-cycle flash memory, or other non-volatile memory, up to 40 MHz, a prefetch buffer to improve performance above 40 MHz, a 32 KB single-cycle serial random access memory (SRAM), internal read-only memory (ROM) loaded with StellarisWare® software, 2KB electrically erasable programmable read-only memory (EEPROM), one or more pulse width modulation (PWM) modules, one or more quadrature encoder inputs (QEI) analog, one or more 12-bit Analog-to-Digital Converters (ADC) with 12 analog input channels, among other features that are readily available for the product datasheet. The present disclosure should not be limited in this context.

[0076] Referring now primarily to FIG. 36 and 37, the power assembly 2006 includes a power management circuit 2034 which comprises the power management controller 2016, a power modulator 2038, and a current sense circuit 2036. The power management circuit 2034 is configured to modulate power output of the battery 2007 based on the power requirements of the shaft assembly 2004 while the shaft assembly 2004 and the power assembly 2006 are coupled to the handle assembly 2002. For example, the power management controller 2016 can be programmed to control the power modulator 2038 of the power output of the power assembly 2006 and the current sense circuit 2036 can be employed to monitor power output of the power assembly 2006 to provide feedback to the power management controller 2016 about the power output of the battery 2007 so that the power management controller 2016 may adjust the power output of the power assembly 2006 to maintain a desired output, as illustrated in FIG. 37.

[0077] It is noteworthy that the power management controller 2016 and/or the shaft assembly controller 2022 each may comprise one or more processors and/or memory units which may store a number of software modules. Although certain modules and/or blocks of the surgical instrument 2000 may be described by way of example, it can be appreciated that a greater or lesser number of modules and/or blocks may be used. Further, although various instances may be described in terms of modules and/or blocks to facilitate description, such modules and/or blocks may be implemented by one or more hardware components, e.g., processors, Digital Signal Processors (DSPs), Programmable Logic Devices (PLDs), Application Specific Integrated Circuits (ASICs), circuits, registers and/or software components, e.g., programs, subroutines, logic and/or combinations of hardware and software components.

[0078] The surgical instrument 2000 comprises an output device 2042 which includes one or more devices for providing a sensory feedback to a user. Such devices may comprise visual feedback devices (e.g., an LCD display screen, LED indicators), audio feedback devices (e.g., a speaker, a buzzer) or tactile feedback devices (e.g., haptic actuators). The output device 2042 comprises a display 2043 which is included in the handle assembly 2002, as illustrated in FIG. 36. The shaft assembly controller 2022 and/or the power management controller 2016 provide feedback to a user of the surgical instrument 2000 through the output device 2042. The interface 2024 is configured to connect the shaft assembly controller 2022 and/or the power management controller 2016 to the output device 2042, but the reader will appreciate that the output device 2042 can instead be integrated with the power assembly 2006; in such circumstances, communication between the output device 2042 and the shaft assembly controller 2022 may be accomplished through the interface 2024 while the shaft assembly 2004 is coupled to the handle assembly 2002.

[0079] Referring to FIGS. 38 and 39, a surgical instrument 2050 is illustrated. The surgical instrument 2050 is similar in many respects to the surgical fastening and cutting instrument 2000 (FIG. 31). The surgical instrument 2050 includes an end effector 2052 which is similar in many respects to the end effector 2008. The end effector 2052 is configured to act as an endocutter for clamping, severing, and/or stapling tissue.

[0080] The surgical instrument 2050 includes an interchangeable working assembly 2054 which include a handle assembly 2053 and a shaft 2055 extending between the handle assembly 2053 and the end effector 2052, as illustrated in FIG. 38. The surgical instrument 2050 includes a power assembly 2056 which can be employed

with a plurality of interchangeable working assemblies such as the interchangeable working assembly 2054. Such interchangeable working assemblies may include surgical end effectors such as the end effector 2052 that can be configured to perform one or more surgical tasks or procedures. The handle assembly 2053 and the shaft 2055 may be integrated into a single unit. Alternatively, the handle assembly 2053 and the shaft 2055 may be separably couplable to each other.

[0081] Similar to the surgical instrument 2000, the surgical instrument 2050 operably supports a plurality of drive systems which are powered by the power assembly 2056 while the power assembly 2056 is coupled to the interchangeable working assembly 2054. The interchangeable working assembly 2054 operably supports a closure drive system, which is employed to apply closing and opening motions to the end effector 2052. The interchangeable working assembly 2054 operably supports a firing drive system that is configured to apply firing motions to the end effector 2052. Examples of drive systems suitable for use with the surgical instrument 2050 are described in U.S. Provisional Patent Application Serial No. 61/782,866, entitled CONTROL SYSTEM OF A SURGICAL INSTRUMENT, and filed March 14, 2013 .

[0082] Referring to FIG. 39, the power assembly 2056 of the surgical instrument 2050 is separably coupled to an interchangeable working assembly such as the interchangeable working assembly 2054. Various coupling means can be utilized to releasably couple the power assembly 2056 to the interchangeable working assembly 2054. Exemplary coupling mechanisms are described herein and are described in U.S. Provisional Patent Application Serial No. 61/782,866, entitled CONTROL SYSTEM OF A SURGICAL INSTRUMENT, and filed March 14, 2013.

[0083] Still referring to FIG. 39, the power assembly 2056 includes a power source 2058 such as a battery which can be configured to power the interchangeable working assembly 2054 while coupled to the power assembly 2056. The power assembly 2056 includes a memory 2060 which is configured to receive and store information about the battery 2058 and/or the interchangeable working assembly 2054 such as the state of charge of the battery 2058, the number of treatment cycles performed using the battery 2058, and/or identification information for the interchangeable working assemblies coupled to the power assembly 2056 during the life cycle of the battery 2058. The interchangeable working assembly 2054 includes a controller 2062 which is configured to provide the memory 2060 with such information about the battery 2058 and/or the interchangeable working assembly 2054.

[0084] Still referring to FIG. 39, the power assembly 2056 includes an interface 2064 which is configured to facilitate electrical communication between the memory 2060 of the power assembly 2056 and a controller of an interchangeable working assembly that is coupled to the power assembly 2056 such as the controller 2062 of the interchangeable working assembly 2054. For example, the interface 2064 comprises one or more connectors 2066 for coupling engagement with corresponding working assembly connectors 2068 to permit electrical communication between the controller 2062 and the memory 2060 while the interchangeable working assembly 2054 is coupled to the power assembly 2056. One or more of the electric connectors 2066 and/or 2068 comprise switches which can be activated after coupling engagement of the interchangeable working assembly 2054 and the power assembly 2056 to allow electric communication between the controller 2062 and the memory 2060.

[0085] Still referring to FIG. 39, the power assembly 2056 includes a state of charge monitoring circuit 2070. The state of charge monitoring circuit 2070 may comprise a coulomb counter. The controller 2062 is in communication with the state of charge monitoring circuit 2070 while the interchangeable working assembly 2054 is coupled to the power assembly 2056. The state of charge monitoring circuit 2070 is operable to provide for accurate monitoring of charge states of the battery 2058.

[0086] FIG. 40 depicts an exemplary module 2072 for use with a controller of an interchangeable working assembly such as the controller 2062 of the interchangeable working assembly 2054 while coupled to the power assembly 2056. The controller 2062 may comprise one or more processors and/or memory units which store a number of software modules such as the module 2072. Although certain modules and/or blocks of the surgical instrument 2050 may be described by way of example, it can be appreciated that a greater or lesser number of modules and/or blocks may be used. Further, although various instances may be described in terms of modules and/or blocks to facilitate description, such modules and/or blocks may be implemented by one or more hardware components, e.g., processors, DSPs, PLDs, ASICs, circuits, registers and/or software components, e.g., programs, subroutines, logic and/or combinations of hardware and software components.

[0087] In any event, upon coupling the interchangeable working assembly 2054 to the power assembly 2056, the interface 2064 facilitates communication between the controller 2062 and the memory 2060 and/or the state of charge monitoring circuit 2070 to execute the module 2072, as illustrated in FIG. 40. The controller 2062 of the interchangeable working assembly 2054 utilizes the state of charge monitoring circuit 2070 to measure the state of charge of the battery 2058. The controller 2062 then accesses the memory 2060 and determines whether a previous value for the state of charge of the battery 2058 is stored in the memory 2060. When a previous value is detected, the controller 2060 compares the measured value to the previously stored value. When the measured value is different from the previously stored value, the controller 2060 updates the previously stored value. When no value is previously recorded, the controller 2060 stores the measured value into the memory 2060. The controller 2060 provides visual feedback to a

user of the surgical instrument 2050 as to the measured state of charge of the battery 2058. For example, the controller 2060 displays the measured value of the state of charge of the battery 2058 on an LCD display screen which can be integrated with the interchangeable working assembly 2054.

[0088] The module 2072 also can be executed by other controllers upon coupling the interchangeable working assemblies of such other controllers to the power assembly 2056. For example, a user may disconnect the interchangeable working assembly 2054 from the power assembly 2056. The user may then connect another interchangeable working assembly comprising another controller to the power assembly 2056. Such controller in turn utilizes the coulomb counting circuit 2070 to measure the state of charge of the battery 2058 and then accesses the memory 2060 and determines whether a previous value for the state of charge of the battery 2058 is stored in the memory 2060 such as a value entered by the controller 2060 while the interchangeable working assembly 2054 was coupled to the power assembly 2056. When a previous value is detected, the controller compares the measured value to the previously stored value. When the measured value is different from the previously stored value, the controller updates the previously stored value.

[0089] FIG. 41 depicts a surgical instrument 2090 which is similar in many respects to the surgical instrument 2000 (FIG. 31) and/orthe surgical instrument 2050 (FIG. 38). The surgical instrument 2090 includes an end effector 2092 which is similar in many respects to the end effector 2008 and/or the end effector 2052. The end effector 2092 is configured to act as an endocutter for clamping, severing, and/or stapling tissue.

[0090] The surgical instrument 2090 includes an interchangeable working assembly 2094 which includes a handle assembly 2093 and a shaft 2095 which extends between the handle assembly 2093 and the end effector 2092. The surgical instrument 2090 includes a power assembly 2096 which can be employed with a plurality of interchangeable working assemblies such as the interchangeable working assembly 2094. Such interchangeable working assemblies comprise surgical end effectors such as the end effector 2092 that can be configured to perform one or more surgical tasks or procedures. The handle assembly 2093 and the shaft 2095 may be integrated into a single unit. Alternatively, the handle assembly 2093 and the shaft 2095 can be separably couplable to each other.

[0091] Furthermore, the power assembly 2096 of the surgical instrument 2090 is separably couplable to an interchangeable working assembly such as the interchangeable working assembly 2094. Various coupling means can be utilized to releasably couple the power assembly 2096 to the interchangeable working assembly 2094. Similar to the surgical instrument 2050 and/or the surgical instrument 2000, the surgical instrument 2090 operably supports one or more drive systems which are powered by the power assembly 2096 while the power assembly 2096 is coupled to the interchangeable working assembly 2094. For example, the interchangeable working assembly 2094 operably supports a closure drive system, which is employed to apply closing and/or opening motions to the end effector 2092. The interchangeable working assembly 2094 operably supports a firing drive system that is configured to apply firing motions to the end effector 2092. Exemplary drive systems and coupling mechanisms for use with the surgical instrument 2090 are described in greater detail U.S. Provisional Patent Application Serial No. 61/782,866, entitled CONTROL SYSTEM OF A SURGICAL INSTRUMENT, and filed March 14, 2013.

[0092] Referring to FIGS. 41-45, the interchangeable working assembly 2094 includes a motor such as the motor 2014 (FIG. 44) and a motor driver such as the motor driver 2015 (FIG. 44) which are employed to motivate the closure drive system and/or the firing drive system of the interchangeable working assembly 2094. The motor 2014 is powered by a battery 2098 (FIG. 42) which resides in the power assembly 2096. As illustrated in FIGS. 42 and 43, the battery 2098 includes a number of battery cells connected in series that can be used as a power source to power the motor 2014. The battery cells of the power assembly 2096 may be replaceable and/or rechargeable. The battery cells can be Lithium-Ion batteries which can be separably couplable to the power assembly 2096. In use, a voltage polarity provided by the power assembly 2096 operates the motor 2014 to drive a longitudinally-movable drive member to effectuate the end effector 2092. For example, the motor 2014 can be configured to drive the longitudinally-movable drive member to advance a cutting member to cut tissue captured by the end effector 2092 and/or a firing mechanism to fire staples from a staple cartridge assembled with the end effector 2092. The staples can be fired into tissue captured by the end effector 2092.

[0093] Referring now to FIGS. 41-45, the interchangeable working assembly 2094 includes a working assembly controller 2102 (FIGS. 44 and 45) and the power assembly 2096 includes a power assembly controller 2100 (FIGS. 42 and 43). The working assembly controller 2102 is configured to generate one or more signals to communicate with the power assembly controller 2100. The working assembly controller 2102 generates the one or more signals to communicate with the power assembly controller 2100 by modulating power transmission from the power assembly 2096 to the interchangeable working assembly 2094 while the power assembly 2096 is coupled to the interchangeable working assembly 2094.

[0094] Furthermore, the power assembly controller 2100 is configured to perform one or more functions in response to receiving the one or more signals generated by the working assembly controller 2102. For example, the interchangeable working assembly 2094 comprises a power requirement and the working assembly controller 2102 is configured to generate a signal to instruct the power assembly controller 2100 to select a power output

of the battery 2098 in accordance with the power requirement of the interchangeable working assembly 2094; the signal is generated, as described above, by modulating power transmission from the power assembly 2096 to the interchangeable working assembly 2094 while the power assembly 2096 is coupled to the interchangeable working assembly 2094. In response to receiving the signal, the power assembly controller 2100 sets the power output of the battery 2098 to accommodate the power requirement of the interchangeable working assembly 2094. The reader will appreciate that various interchangeable working assemblies may be utilized with the power assembly 2096. The various interchangeable working assemblies may comprise various power requirements and may generate signals unique to their power requirements during their coupling engagement with the power assembly 2096 to alert the power assembly controller 2100 to set the power output of the battery 2098 in accordance with their power requirements.

[0095] Referring now primarily to FIGS. 42 and 43, the power assembly 2096 includes a power modulator control 2106 which comprises one or more field-effect transistors (FETs), a Darlington array, an adjustable amplifier, and/or any other power modulator. The power assembly controller 2100 actuates the power modulator control 2106 to set the power output of the battery 2098 to the power requirement of the interchangeable working assembly 2094 in response to the signal generated by working assembly controller 2102 while the interchangeable working assembly 2094 is coupled to the power assembly 2096.

[0096] Still referring primarily to FIGS. 42 and 43, the power assembly controller 2100 is configured to monitor power transmission from the power assembly 2096 to the interchangeable working assembly 2094 for the one or more signals generated by the working assembly controller 2102 of the interchangeable working assembly 2094 while the interchangeable working assembly 2094 is coupled to the power assembly 2096. As illustrated in FIG. 42, the power assembly controller 2100 utilizes a voltage monitoring mechanism for monitoring the voltage across the battery 2098 to detect the one or more signals generated by the working assembly controller 2102. A voltage conditioner can be utilized to scale the voltage of the battery 2098 to be readable by an Analog to Digital Converter (ADC) of the power assembly controller 2100. As illustrated in FIG. 42, the voltage conditioner comprises a voltage divider 2108 which creates a reference voltage or a low voltage signal proportional to the voltage of the battery 2098 which is measured and reported to the power assembly controller 2100 through the ADC.

[0097] As illustrated in FIG. 43, the power assembly 2096 comprises a current monitoring mechanism for monitoring current transmitted to the interchangeable working assembly 2094 to detect the one or more signals generated by the working assembly controller 2102. The power assembly 2096 may comprise a current sensor 2110 which can be utilized to monitor current transmitted to the interchangeable working assembly 2094. The monitored current can be reported to the power assembly controller 2100 through an ADC. Alternatively, the power assembly controller 2100 may be configured to simultaneously monitor both of the current transmitted to the interchangeable working assembly 2094 and the corresponding voltage across the battery 2098 to detect the one or more signals generated by the working assembly controller 2102. The reader will appreciate that various other mechanisms for monitoring current and/or voltage can be utilized by the power assembly controller 2100 to detect the one or more signals generated by the working assembly controller 2102; all such mechanisms are contemplated by the present disclosure.

[0098] As illustrated in FIG. 44, the working assembly controller 2102 is configured to generate the one or more signals for communication with the power assembly controller 2100 by effectuating the motor driver 2015 to modulate the power transmitted to the motor 2014 from the battery 2098. In result, the voltage across the battery 2098 and/or the current drawn from the battery 2098 to power the motor 2014 form discrete patterns or waveforms that represent the one or more signals. As described above, the power assembly controller 2100 is configured to monitor the voltage across the battery 2098 and/or the current drawn from the battery 2098 for the one or more signals generated by the working assembly controller 2102.

[0099] Upon detecting a signal, the power assembly controller 2100 is configured to perform one or more functions that correspond to the detected signal. For example, upon detecting a first signal, the power assembly controller 2100 can be configured to actuate the power modulator control 2106 to set the power output of the battery 2098 to a first duty cycle. Upon detecting a second signal, the power assembly controller 2100 can be configured to actuate the power modulator control 2106 to set the power output of the battery 2098 to a second duty cycle different from the first duty cycle.

[0100] As illustrated in FIG. 45, the interchangeable working assembly 2094 includes a power modulation circuit 2012 which comprises one or more field-effect transistors (FETs) which can be controlled by the working assembly controller 2102 to generate a signal or a waveform recognizable by the power assembly controller 2100. For example the working assembly controller 2102 operates the power modulation circuit 2012 to amplify the voltage higher than the voltage of the battery 2098 to trigger a new power mode of the power assembly 2096.

[0101] Referring now primarily to FIGS. 42 and 43, the power assembly 2096 comprises a switch 2104 which is switchable between an open position and a closed position. The switch 2104 can be transitioned from the open position to the closed positioned when the power assembly 2096 is coupled with the interchangeable working assembly 2094. For example, the switch 2104 can be manually transitioned from the open position to the closed position after the power assembly 2096 is coupled with

the interchangeable working assembly 2094. While the switch 2104 is in the open position, components of the power assembly 2096 draw sufficiently low or no power to retain capacity of the battery 2098 for clinical use. The switch 2104 can be a mechanical, reed, hall, or any other suitable switching mechanism. The power assembly 2096 may include an optional power supply 2105 which is configured to provide sufficient power to various components of the power assembly 2096 during use of the battery 2098. Similarly, the interchangeable working assembly 2094 also may include an optional power supply 2107 which is configured to provide sufficient power to various components of the interchangeable working assembly 2094.

[0102] In use, as illustrated in FIG. 46, the power assembly 2096 is coupled to the interchangeable working assembly 2094. As described above, the switch 2104 can be transitioned to the closed configuration to electrically connect the interchangeable working assembly 2094 to the power assembly 2096. In response, the interchangeable working assembly 2094 powers up and, at least initially, draws relatively low current from the battery 2098. For example, the interchangeable working assembly 2094 may draw less than or equal to 1 ampere to power various components of the interchangeable working assembly 2094. The power assembly 2096 also may power up as the switch 2014 is transitioned to the closed position. In response, the power assembly controller 2100 begins to monitor current draw from the interchangeable working assembly 2094, as described in greater detail above, by monitoring voltage across the battery 2098 and/or current transmission from the battery 2098 to the interchangeable working assembly 2094.

[0103] To generate and transmit a communication signal to the power assembly controller 2100 via power modulation, the working assembly controller 2102 employs the motor drive 2015 to pulse power to the motor 2014 in patterns or waveforms of power spikes. The working assembly controller 2102 can be configured to communicate with the motor driver 2015 to rapidly switch the direction of motion of the motor 2014 by rapidly switching the voltage polarity across the windings of the motor 2014 to limit the effective current transmission to the motor 2014 resulting from the power spikes. In result, as illustrated in FIG. 47C, the effective motor displacement resulting from the power spikes can be reduced to minimize effective displacement of a drive system of the surgical instrument 2090 that is coupled to the motor 2014 in response to the power spikes.

[0104] Further to the above, the working assembly controller 2102 communicates with the power assembly controller 2100 by employing the motor driver 2015 to draw power from the battery 2098 in spikes arranged in predetermined packets or groups which can be repeated over predetermined time periods to form patterns detectable by the power assembly controller 2100. For example, as illustrated in FIGS. 47A and 47B, the power assembly controller 2100 is configured to monitor voltage across the battery 2100 for predetermined voltage patterns such as the voltage pattern 2103 (FIG. 47A) and/or predetermined current patterns such as the current pattern 2109 (FIG. 47B) using voltage and/or current monitoring mechanisms as described in greater detail above. Furthermore, the power assembly controller 2100 is configured to perform one or more functions upon detecting of a pattern. The reader will appreciate that the communication between the power assembly controller 2100 and the working assembly controller 2102 via power transmission modulation reduces the number of connection lines needed between the interchangeable working assembly 2094 and the power assembly 2096.

[0105] The power assembly 2096 can be employed with various interchangeable working assemblies of multiple generations which may comprise different power requirements. Some of the various interchangeable workings assemblies may comprise communication systems, as described above, while others may lack such communication systems. For example, the power assembly 2096 can be utilized with a first generation interchangeable working assembly which lacks the communication system described above. Alternatively, the power assembly 2096 can be utilized with a second generation interchangeable working assembly such as the interchangeable working assembly 2094 which comprises a communication system, as described above.

[0106] Further to the above, the first generation interchangeable working assembly comprises a first power requirement and the second generation interchangeable working assembly comprises a second power requirement which can be different from the first power requirement. The first power requirement may be less than the second power requirement. To accommodate the first power requirement of the first generation interchangeable working assembly and the second power requirement of the second generation interchangeable working assembly, the power assembly 2096 comprises a first power mode for use with the first generation interchangeable working assembly and a second power mode for use with the second generation interchangeable working assembly. The power assembly 2096 can be configured to operate at a default first power mode corresponding to the power requirement of the first generation interchangeable working assembly. When a first generation interchangeable working assembly is connected to the power assembly 2096, the default first power mode of the power assembly 2096 accommodates the first power requirement of the first generation interchangeable working assembly. However, when a second generation interchangeable working assembly such as the interchangeable working assembly 2094 is connected to the power assembly 2096, the working assembly controller 2102 of the interchangeable working assembly 2094 communicates, as described above, with the power assembly controller 2100 of the power assembly 2096 to switch the power assembly 2096 to the second power mode to accommodate the second power requirement of the inter-

changeable working assembly 2094. The reader will appreciate that since the first generation interchangeable working assembly lacks the ability to generate a communication signal, the power assembly 2096 will remain in the default first power mode while connected to the first generation interchangeable working assembly.

[0107] As described above, the battery 2098 can be rechargeable. It may be desirable to drain the battery 2098 prior to shipping the power assembly 2096. A dedicated drainage circuit can be activated to drain the battery 2098 in preparation for shipping of the power assembly 2096. Upon reaching its final destination, the battery 2098 is recharged for use during a surgical procedure. However, the drainage circuit may continue to consume energy from the battery 2098 during clinical use. The interchangeable working assembly controller 2102 is configured to transmit a drainage circuit deactivation signal to the power assembly controller 2100 by modulating power transmission from the battery 2098 to the motor 2014, as described in greater detail above. The power assembly controller 2100 is programmed to deactivate the drainage circuit to prevent drainage of the battery 2098 by the drainage circuit in response to the drainage circuit deactivation signal. The reader will appreciate that various communication signals can be generated by the working assembly controller 2102 to instruct the power assembly controller 2100 to perform various functions while the power assembly 2096 is coupled to the interchangeable working assembly 2094.

[0108] Referring again to FIGS. 42-45, the power assembly controller 2100 and/or the working assembly controller 2102 comprise one or more processors and/or memory units which may store a number of software modules. Although certain modules and/or blocks of the surgical instrument 2050 may be described by way of example, it can be appreciated that a greater or lesser number of modules and/or blocks may be used. Further, although various instances may be described in terms of modules and/or blocks to facilitate description, such modules and/or blocks may be implemented by one or more hardware components, e.g., processors, DSPs, PLDs, ASICs, circuits, registers and/or software components, e.g., programs, subroutines, logic and/or combinations of hardware and software components.

[0109] FIG. 48 generally depicts a motor-driven surgical instrument 2200. The surgical instrument 2200 includes a handle assembly 2202, a shaft assembly 2204, and a power assembly 2206 (or "power source" or "power pack"). The shaft assembly 2204 includes an end effector 2208 which can be configured to act as an endocutter for clamping, severing, and/or stapling tissue, although different types of end effectors may be used, such as end effectors for other types of surgical devices, graspers, cutters, staplers, clip appliers, access devices, drug/gene therapy devices, ultrasound, RF and/or laser devices, etc. Several RF devices may be found in U.S. Patent No. 5,403,312, entitled ELECTROSURGICAL HEMOSTATIC DEVICE, which issued on April 4, 1995, and U.S. Patent Application Serial No. 12/031,573, entitled SURGICAL FASTENING AND CUTTING INSTRUMENT HAVING RF ELECTRODES, filed February 14, 2008, the entire disclosures of which are incorporated herein by reference in their entirety.

[0110] The handle assembly 2202 is separably couplable to the shaft assembly 2204. The handle assembly 2202 can be employed with a plurality of interchangeable shaft assemblies which comprise surgical end effectors such as the end effector 2208 that can be configured to perform one or more surgical tasks or procedures. For example, one or more of the interchangeable shaft assemblies may employ end effectors that are adapted to support different sizes and types of staple cartridges, have different shaft lengths, sizes, and types, etc. Examples of suitable interchangeable shaft assemblies are disclosed in U.S. Provisional Patent Application Serial No. 61/782,866, entitled CONTROL SYSTEM OF A SURGICAL INSTRUMENT, and filed March 14, 2013.

[0111] Referring still to FIG. 48, the handle assembly 2202 comprises a housing 2210 that consists of a handle 2212 that may be configured to be grasped, manipulated, and/or actuated by a clinician. However, it will be understood that the various unique and novel arrangements of the housing 2210 also may be effectively employed in connection with robotically-controlled surgical systems. Thus, the term "housing" also may encompass a housing or similar portion of a robotic system that houses or otherwise operably supports at least one drive system that is configured to generate and apply at least one control motion which could be used to actuate the shaft assembly 2204 disclosed herein and its respective equivalents. For example, the housing 2210 disclosed herein may be employed with various robotic systems, instruments, components and methods disclosed in U.S. Patent Application Serial No. 13/118,241, entitled SURGICAL STAPLING INSTRUMENTS WITH ROTATABLE STAPLE DEPLOYMENT ARRANGEMENTS, now U.S. Patent Application Publication No. 2012/0298719 .

[0112] The surgical instrument 2200 may be a surgical fastening and cutting instrument. Furthermore, the housing 2210 operably supports one or more drive systems. For example, as illustrated in FIG. 50, the housing 2210 supports a drive system referred to herein as firing drive system 2214 that is configured to apply firing motions to the end effector 2208. The firing drive system 2214 employs an electric motor 2216, which can be located in the handle 2212. The motor 2216 may be a DC brushed driving motor having a maximum rotation of, approximately, 25,000 RPM. Alternatively, the motor may include a brushless motor, a cordless motor, a synchronous motor, a stepper motor, or any other suitable electric motor. A battery 2218 (or "power source" or "power pack"), such as a Li ion battery may be coupled to the handle 2212 to supply power to a control circuit board assembly 2220 and ultimately to the motor 2216.

[0113] Referring still to FIG. 50, the electric motor 2216 includes a rotatable shaft (not shown) that operably in-

terfaces with a gear reducer assembly 2222 that is mounted in meshing engagement with a set, or rack, of drive teeth 2224 on a longitudinally-movable drive member 2226. In use, a voltage polarity provided by the battery 2218 operates the electric motor 2216 in a clockwise direction wherein the voltage polarity applied to the electric motor by the battery 2218 can be reversed in order to operate the electric motor 2216 in a counter-clockwise direction. When the electric motor 2216 is rotated in one direction, the drive member 2226 will be axially driven in a distal direction "D" and when the motor 2216 is driven in the opposite rotary direction, the drive member 2226 will be axially driven in a proximal direction "P" as illustrated in FIG. 50. The handle 2212 includes a switch which is configured to reverse the polarity applied to the electric motor 2216 by the battery 2218. The handle 2212 also includes a sensor that is configured to detect the position of the drive member 2226 and/orthe direction in which the drive member 2226 is being moved.

[0114] As indicated above the longitudinally movable drive member 2226 includes a rack of drive teeth 2224 formed thereon for meshing engagement with the gear reducer assembly 2222. As illustrated in FIG. 50, the surgical instrument 2200 includes a manually-actuatable "bailout" assembly 2228 that is configured to enable a clinician to manually retract the longitudinally movable drive member 2226 when a bailout error is detected such as when the motor 2216 malfunctions during operation of the surgical instrument 2200 which may cause tissue captured by the end effector 2208 to be trapped.

[0115] As illustrated in FIG. 50, the bailout assembly 2228 includes a lever or bailout handle 2230 configured to be manually moved or pivoted into ratcheting engagement with the teeth 2224 in the drive member 2226. In such circumstances, the clinician can manually retract the drive member 2226 by using the bailout handle 2230 to ratchet the drive member 2226 in the proximal direction "P" to release the trapped tissue from the end effector 2208. Exemplary bailout arrangements and other components, arrangements and systems that may be employed with the various instruments disclosed herein are disclosed in U.S. Patent Application Serial No. 12/249,117, entitled POWERED SURGICAL CUTTING AND STAPLING APPARATUS WITH MANUALLY RETRACTABLE FIRING SYSTEM, now U.S. Patent Application Publication No. 2010/0089970.

[0116] Referring now primarily to FIGS. 48 and 50, the bailout handle 2230 of the bailout assembly 2228 resides within the housing 2210 of the handle assembly 2202. Access to the bailout handle 2230 is controlled by a bailout door 2232. The bailout door 2232 is releasably locked to the housing 2210 to control access to the bailout handle 2230. As illustrated in FIG. 48, the bailout door 2232 includes a locking mechanism such as a snap-type locking mechanism 2234 for locking engagement with the housing 2210. Other locking mechanisms for locking the bailout door 2232 to the housing 2210 are contemplated by the present disclosure. In use, a clinician may obtain access to the bailout handle 2230 by unlocking the locking mechanism 2234 and opening the bailout door 2232. The bailout door 2232 is separably coupled to the housing 2232 and can be detached from the housing 2210 to provide access to the bailout handle 2230. In another example, the bailout door 2232 is pivotally coupled to the housing 2210 via hinges (not shown) and can be pivoted relative to the housing 2210 to provide access to the bailout handle 2230. In yet another example, the bailout door 2232 can be a sliding door which can be slidably movable relative to the housing 2210 to provide access to the bailout handle 2230.

[0117] Referring now to FIG. 51, the surgical instrument 2200 includes a bailout feedback system 2236 which is configured to guide and/or provide feedback to a clinician through the various steps of utilizing the bailout assembly 2228, as described below in greater detail. The bailout feedback system 2236 may include a microcontroller 2238 and/or one or more bailout feedback elements. The electrical and electronic circuit elements associated with the bailout feedback system 2236 and/or the bailout feedback elements are supported by the control circuit board assembly 2220. The microcontroller 2238 generally comprises a memory 2240 and a microprocessor 2242 ("processor") operationally coupled to the memory 2240. The processor 2242 controls a motor driver 2244 circuit generally utilized to control the position and velocity of the motor 2216. The processor 2242 signals the motor driver 2244 to stop and/or disable the motor 2216, as described in greater detail below. The processor 2242 controls a separate motor override circuit which comprises a motor override switch that can stop and/or disable the motor 2216 during operation of the surgical instrument 2200 in response to an override signal from the processor 2242. It should be understood that the term processor as used herein includes any suitable microprocessor, microcontroller, or other basic computing device that incorporates the functions of a computer's central processing unit (CPU) on an integrated circuit or at most a few integrated circuits. The processor is a multipurpose, programmable device that accepts digital data as input, processes it according to instructions stored in its memory, and provides results as output. It is an example of sequential digital logic, as it has internal memory. Processors operate on numbers and symbols represented in the binary numeral system.

[0118] The processor 2242 may be any single core or multicore processor such as those known under the trade name ARM Cortex by Texas Instruments. The surgical instrument 2200 comprises a safety processor such as a safety microcontroller platform comprising two microcontroller-based families such as TMS570 and RM4x known under the trade name Hercules ARM Cortex R4, also by Texas Instruments. Nevertheless, other suitable substitutes for microcontrollers and safety processor may be employed, without limitation. The safety processor 1004 may be configured specifically for IEC 61508 and ISO 26262 safety critical applications, to provide ad-

vanced integrated safety features while delivering scalable performance, connectivity, and memory options.

[0119] The microcontroller 2238 may be an LM 4F230H5QR, available from Texas Instruments. The Texas Instruments LM4F230H5QR is an ARM Cortex-M4F Processor Core comprising on-chip memory 2240 of 256 KB single-cycle flash memory, or other non-volatile memory, up to 40 MHz, a prefetch buffer to improve performance above 40 MHz, a 32 KB single-cycle serial random access memory (SRAM), internal read-only memory (ROM) loaded with StellarisWare® software, 2KB electrically erasable programmable read-only memory (EEPROM), one or more pulse width modulation (PWM) modules, one or more quadrature encoder inputs (QEI) analog, one or more 12-bit Analog-to-Digital Converters (ADC) with 12 analog input channels, among other features that are readily available for the product datasheet. Other microcontrollers may be readily substituted for use in the bailout feedback system 2236. Accordingly, the present disclosure should not be limited in this context.

[0120] Referring again to FIG. 51, the bailout feedback system 2236 may include a bailout door feedback element 2246. The bailout door feedback element 2246 is configured to alert the processor 2242 that the locking mechanism 2234 is unlocked. The bailout door feedback element 2246 may comprise a switch circuit (not shown) operably coupled to the processor 2242; the switch circuit can be configured to be transitioned to an open configuration when the locking mechanism 2234 is unlocked by a clinician and/or transitioned to a closed configuration when the locking mechanism 2234 is locked by the clinician. The bailout door feedback element 2246 comprises at least one sensor (not shown) operably coupled to the processor 2242; the sensor can be configured to be triggered when the locking mechanism 2234 is transitioned to unlocked and/or locked configurations by the clinician. The reader will appreciate that the bailout door feedback element 2246 may include other means for detecting the locking and/or unlocking of the locking mechanism 2234 by the clinician.

[0121] The bailout door feedback element 2246 comprises a switch circuit (not shown) operably coupled to the processor 2242; the switch circuit is configured to be transitioned to an open configuration when the bailout door 2232 is removed or opened and/or transitioned to a closed configuration when the bailout door 2232 is installed or closed. The bailout door feedback element 2246 comprises at least one sensor (not shown) operably coupled to the processor 2242; the sensor is configured to be triggered when the bailout door 2232 is removed or opened and/or when the bailout door 2232 is closed or installed. The reader will appreciate that the bailout door feedback element 2246 may include other means for detecting the locking and/or unlocking of the locking mechanism 2234 and/or the opening and/or closing of the bailout door 2232 by the clinician.

[0122] As illustrated in FIG. 51, the bailout feedback system 2236 comprises one or more additional feedback elements 2248 which comprise additional switch circuits and/or sensors in operable communication with the processor 2242; the additional switch circuits and/or sensors are employed by the processor 2242 to measure other parameters associated with the bailout feedback system 2236. The bailout feedback system 2236 may comprise one or more interfaces which include one or more devices for providing a sensory feedback to a user. Such devices may comprise visual feedback devices such as display screens and/or LED indicators. Such devices may comprise audio feedback devices such as speakers and/or buzzers. Such devices may comprise tactile feedback devices such as haptic actuators. Such devices may comprise combinations of visual feedback devices, audio feedback devices, and/or tactile feedback devices. As illustrated in FIG. 48, the one or more interfaces comprise a display 2250 which is included in the handle assembly 2202. The processor 2242 employs the display 2250 to alert, guide, and/or provide feedback to a user of the surgical instrument 2200 with regard to performing a manual bailout of the surgical instrument 2200 using the bailout assembly 2228.

[0123] The bailout feedback system 2236 comprises one or more embedded applications implemented as firmware, software, hardware, or any combination thereof; or the bailout feedback system 2236 comprises various executable modules such as software, programs, data, drivers, and/or application program interfaces (APIs). FIG. 52 depicts an exemplary module 2252 that is stored in the memory 2240. The module 2252 can be executed by the processor 2242 to alert, guide, and/or provide feedback to a user of the surgical instrument 2200 with regard to performing a manual bailout of the surgical instrument 2200 using the bailout assembly 2228.

[0124] As illustrated in FIG. 52, the module 2252 is executed by the processor 2242 to provide the user with instructions as to how to access and/or use the bailout assembly 2228 to perform the manual bailout of the surgical instrument 2200. The module 2252 comprises one or more decision-making steps such as a decision-making step 2254 with regard to the detection of one or more errors requiring the manual bailout of the surgical instrument 2200.

[0125] The processor 2242 is configured to detect a bailout error in response to the occurrence of one or more intervening events during the normal operation of the surgical instrument 2200. The processor 2242 is configured to detect a bailout error when one or more bailout error signals are received by the processor 2242; the bailout error signals can be communicated to the processor 2242 by other processors and/or sensors of the surgical instrument 2200. An exemplary bailout error can be detected by the processor 2242 when a temperature of the surgical instrument 2200, as detected by a sensor (not shown), exceeds a threshold. The surgical instrument 2200 may comprise a positioning system (not shown) for sensing

and recording the position of the longitudinally-movable drive member 2226 during a firing stroke of the firing drive system 2214. The processor 2242 is configured to detect a bailout error when one or more of the recorded positions of the longitudinally-movable drive member 2226 is not are accordance with a predetermined threshold.

[0126] In any event, referring again to FIG. 52, when the processor 2242 detects a bailout error in the decision-making step 2254, the processor 2242 responds by stopping and/or disabling the motor 2216. In additionthe processor 2242 may store a bailed out state in the memory 2240 after detecting the bailout error, as illustrated in FIG. 52. In other words, the processor 2242 stores in the memory 2240 a status indicating that a bailout error has been detected. As described above, the memory 2240 can be a non-volatile memory which may preserve the stored status that a bailout error has been detected when the surgical instrument 2200 is reset by the user.

[0127] The motor 2216 can be stopped and/or disabled by disconnecting the battery 2218 from the motor 2216. The processor 2242 may employ the driver 2244 to stop and/or disable the motor 2216. When the motor override circuit is utilized, the processor 2242 employs the motor override circuit to stop and/or disable the motor 2216. Stopping and/or disabling the motor 2216 prevents a user of the surgical instrument 2200 from using the motor 2216 at least until the manual bailout is performed. The reader will appreciate that stopping and/or disabling the motor 2216 in response to the detection of a bailout error can be advantageous in protecting tissue captured by the surgical instrument 2200.

[0128] Referring still to FIG. 52, the module 2252 includes a decision-making step 2256 for detecting whether the bailout door 2232 is removed. As described above, the processor 2242 is operationally coupled to the bailout door feedback element 2246 which is configured to alert the processor 2242 as to whether the bailout door 2232 is removed. The processor 2242 is programmed to detect that the bailout door 2232 is removed when the bailout door feedback element 2246 reports that the locking mechanism 2234 is unlocked. The processor 2242 is programmed to detect that the bailout door 2232 is removed when the bailout door feedback element 2246 reports that the bailout door 2232 is opened. The processor 2242 is programmed to detect that the bailout door 2232 is removed when the bailout door feedback element 2246 reports that the locking mechanism 2234 is unlocked and that the bailout door 2232 is opened.

[0129] Referring still to FIG. 52, when the processor 2242 does not detect a bailout error in the decision-making step 2254 and does not detect that the bailout door 2232 is removed in the decision-making step 2256, the processor 2242 does not interrupt the normal operation of the surgical instrument 2200 and proceeds with various clinical algorithms. When the processor 2242 does not detect a bailout error in the decision-making step 2254 but detects that the bailout door 2232 is removed in the decision-making step 2256, the processor 2242 responds by stopping and/or disabling the motor 2216, as described above. In additionthe processor 2242 also provides the user with instructions to reinstall the bailout door 2232, as described in greater detail below. When the processor 2242 detects that the bailout door 2232 is reinstalled, while no bailout error is detected, the processor 2242 is configured to reconnect the power to the motor 2216 and allow the user to continue with clinical algorithms, as illustrated in FIG. 52.

[0130] When the user does not reinstall the bailout door 2232, the processor 2242 does not reconnect power to the motor 2216 and continues providing the user with the instructions to reinstall the bailout door 2232. When the user does not reinstall the bailout door 2232, the processor 2242 may provide the user with a warning that the bailout door 2232 needs to be reinstalled in order to continue with the normal operation of the surgical instrument 2200. The surgical instrument 2200 can be equipped with an override mechanism (not shown) to permit the user to reconnect power to the motor 2216 even when the bailout door 2216 is not installed.

[0131] The processor 2242 is configured to provide the user with a sensory feedback when the processor 2242 detects that the bailout door 2232 is removed. The processor 2242 can be configured to provide the user with a sensory feedback when the processor 2242 detects that the bailout door 2232 is reinstalled. Various devices can be employed by the processor 2242 to provide the sensory feedback to the user. Such devices may comprise visual feedback devices such as display screens and/or LED indicators. Such devices may comprise audio feedback devices such as speakers and/or buzzers. Such devices may comprise tactile feedback devices such as haptic actuators. Such devices may comprise combinations of visual feedback devices, audio feedback devices, and/or tactile feedback devices. The processor 2242 employs the display 2250 to instruct the user to reinstall the bailout door 2232. For example, the processor 2242 may present an alert symbol next to an image of the bailout door 2232 to the user through the display 2250. The processor 2242 may present an animated image of the bailout door 2232 being installed. Other images, symbols, and/or words can be displayed through the display 2250 to alert the user of the surgical instrument 2200 to reinstall the bailout door 2232.

[0132] Referring again to FIG. 52, when a bailout error is detected, the processor 2242 signals the user of the surgical instrument 2200 to perform the manual bailout using the bailout handle 2230. The processor 2242 can signal the user to perform the manual bailout by providing the user with a visual, audio, and/or tactile feedback. As illustrated in FIG. 52, the processor 2242 can signal the user of the surgical instrument 2200 to perform the manual bailout by flashing a backlight of the display 2250. In any event, the processor 2242 then provides the user with instructions to perform the manual bailout. As illustrated in FIG. 52, the instructions depend on whether the bailout door 2232 is installed; a decision making step

2258 determines the type of instructions provided to the user. When the processor 2242 detects that the bailout door 2232 is installed, the processor 2242 provides the user with instructions to remove the bailout door 2232 and instructions to operate the bailout handle 2230. However, when the processor 2242 detects that the bailout door 2232 is removed, the processor 2242 provides the user with the instructions to operate the bailout handle 2230 but not the instructions to remove the bailout door 2232.

[0133] Referring again to FIG. 52 the instructions provided by the processor 2242 to the user to remove the bailout door 2232 and/or to operate the bailout handle 2230 comprise one or more steps; the steps are presented to the user in a chronological order. The steps comprise actions to be performed by the user. The user may proceed through the steps of the manual bailout by performing the actions presented in each of the steps. The actions required in one or more of the steps can be presented to the user in the form of animated images displayed on the display 2250. One or more of the steps can be presented to the user as messages which may include words, symbols, and/or images that guide the user through the manual bailout. One or more of the steps of performing the manual bailout can be combined in one or more messages. Each message may comprise a separate step.

[0134] The steps and/or the messages providing the instructions for the manual bailout can be presented to the user in predetermined time intervals to allow the user sufficient time to comply with the presented steps and/or messages. The processor 2242 can be programed to continue presenting a step and/or a message until feedback is received by the processor 2242 that the step has been performed. The feedback can be provided to the processor 2242 by the bailout door feedback element 2246. Other mechanisms and/or sensors can be employed by the processor 2242 to obtain feedback that a step has been completed. The user can be instructed to alert that processor 2242 when a step is completed by pressing an alert button. The display 2250 may comprise a capacitive screen which may provide the user with an interface to alert the processor 2242 when a step is completed. For example, the user may press the capacitive screen to move to the next step of the manual bailout instructions after a current step is completed.

[0135] As illustrated in FIG. 52, after detecting that the bailout door 2232 is installed, the processor 2242 is configured to employ the display 2250 to present an animated image 2260 depicting a hand moving toward the bailout door 2232. The processor 2242 continues to display the animated image 2260 for a time interval sufficient for the user to engage the bailout door 2232. The processor 2242 then replaces the animated image 2260 with an animated image 2262 depicting a finger engaging the bailout door locking mechanism 2234. The processor 2242 continues to display the animated image 2262 for a time interval sufficient for the user to unlock the locking mechanism 2234. The processor 2242 continues to display the animated image 2262 until the bailout door feedback element 2246 reports that the locking mechanism 2234 is unlocked. Alternatively, the processor 2242 continues to display the animated image 2262 until the user alerts the processor 2242 that the step of unlocking the locking mechanism 2234 is completed.

[0136] In any event, the processor 2242 then replaces the animated image 2262 with an animated image 2264 depicting a finger removing the bailout door 2232. The processor 2242 continues to display the animated image 2264 for a time interval sufficient for the user to remove the bailout door 2232. The processor 2242 continues to display the animated image 2264 until the bailout door feedback element 2246 reports that the bailout door 2232 is removed, or until the user alerts the processor 2242 that the step of removing the bailout door 2232 has been removed. The processor 2242 is configured to continue to repeat displaying the animated images 2260, 2262, and 2246 in their respective order when the processor 2242 continues to detect that the bailout door is installed at the decision making step 2258.

[0137] After detecting that the bailout door 2232 is removed, the processor 2242 proceeds to guide the user through the steps of operating the bailout handle 2230. The processor 2242 replaces the animated image 2264 with an animated image 2266 depicting a finger lifting the bailout handle 2230 into ratcheting engagement with the teeth 2224 in the drive member 2226, as described above. The processor 2242 continues to display the animated image 2266 for a time interval sufficient for the user to lift the bailout handle 2230, or until the processor receives feedback that the bailout handle 2230 has been lifted. For example, the processor 2242 may continue to display the animated image 2266 until the user alerts the processor 2242 that the step of lifting the bailout handle 2230 has been removed.

[0138] As described above, the user can manually retract the drive member 2226 by using the bailout handle 2230 to ratchet the drive member 2226 in the proximal direction "P," to release tissue trapped by the end effector 2208. In such instances, the processor 2242 replaces the animated image 2266 with an animated image 2268 depicting a finger repeatedly pulling then pushing the bailout handle 2230 to simulate the ratcheting of the bailout handle 2230. The processor 2242 continues to display the animated image 2268 for a time interval sufficient for the user to ratchet the drive member 2226 to default position. The processor 2242 continues to display the animated image 2268 until the processor 2242 receives feedback that the drive member 2226 has been retracted.

[0139] FIG. 53 depicts a module 2270 which is similar in many respects to the module 2258. The module 2252 is also stored in the memory 2240 and/or executed by the processor 2242 to alert, guide, and/or provide feedback to a user of the surgical instrument 2200 with regard to performing a manual bailout of the surgical instrument 2200. In certain instances, the surgical instrument 2200

may not comprise a bailout door. In such circumstances, the module 2270 can be employed by the processor 2242 to provide the user with instructions as to how to operate the bailout handle 2230.

[0140] Referring again to the module 2270 depicted in FIG. 53, when the processor 2242 does not detect a bailout error in the decision-making step 2254 of the module 2270, the processor 2242 does not interrupt the normal operation of the surgical instrument 2200 and proceeds with various clinical algorithms. However, when the processor 2242 detects a bailout error in the decision-making step 2254 of the module 2270, the processor 2242 responds by stopping and/or disabling the motor 2216. In additionthe processor 2242 also may store a bailed out state in the memory 2240 after detecting the bailout error, as illustrated in FIG. 53. In the absence of a bailout door, the processor 2242 signals the user of the surgical instrument 2200 to perform the manual bailout by flashing the backlight of the display 2250; the processor 2242 then proceed directly to providing the user with the instructions to operate the bailout handle 2230, as described above.

[0141] The reader will appreciate that the steps depicted in FIGS. 52 and/or 53 are illustrative examples of the instructions that can be provided to the user of the surgical instrument 2200 to perform a manual bailout. The modules 2252 and/or 2270 can be configured to provide more or fewer steps than those illustrated in FIGS. 52 and 53. The reader will also appreciate that the modules 2252 and/or 2270 are exemplary modules; various other modules can be executed by the processor 2242 to provide the user of the surgical instrument 2200 with instructions to perform the manual bailout.

[0142] As described above, the processor 2242 is configured to present to the user of the surgical instrument 2200 the steps and/or messages for performing a manual bailout in predetermined time intervals. Such time intervals may be the same or may vary depending on the complexity of the task to be performed by the user. Such time intervals can be any time interval in the range of about 1 second to about 10 minutes. Such time intervals can be any time interval in the range of about 1 second to about 1 minute. Other time intervals are contemplated by the present disclosure.

[0143] A power assembly, such as, for example the power assembly 2006 illustrated in FIGS. 31-33, is configured to monitor the number of uses of the power assembly 2006 and/or a surgical instrument 2000 coupled to the power assembly 2006. The power assembly 2006 maintains a usage cycle count corresponding to the number of uses. The power assembly 2006 and/or the surgical instrument 2000 performs one or more actions based on the usage cycle count. For examplewhen the usage cycle count exceeds a predetermined usage limit, the power assembly 2006 and/or a surgical instrument 2000 may disable the power assembly 2006, disable the surgical instrument 2000, indicate that a reconditioning or service cycle is required, provide a usage cycle count to an operator and/or a remote system, and/or perform any other suitable action. The usage cycle count is determined by any suitable system, such as a mechanical limiter, a usage cycle circuit, and/or any other suitable system coupled to the battery 2006 and/or the surgical instrument 2000.

[0144] FIG. 54 illustrates one example of a power assembly 2400 comprising a usage cycle circuit 2402 configured to monitor a usage cycle count of the power assembly 2400. The power assembly 2400 is coupled to a surgical instrument 2410. The usage cycle circuit 2402 comprises a processor 2404 and a use indicator 2406. The use indicator 2406 is configured to provide a signal to the processor 2404 to indicate a use of the battery back 2400 and/or a surgical instrument 2410 coupled to the power assembly 2400. A "use" may comprise any suitable action, condition, and/or parameter such as changing a modular component of a surgical instrument 2410, deploying or firing a disposable component coupled to the surgical instrument 2410, delivering electrosurgical energy from the surgical instrument 2410, reconditioning the surgical instrument 2410 and/or the power assembly 2400, exchanging the power assembly 2400, recharging the power assembly 2400, and/or exceeding a safety limitation of the surgical instrument 2410 and/or the battery back 2400.

[0145] A usage cycle, or use, is defined by one or more power assembly 2400 parameters. For examplea usage cycle comprises using more than 5% of the total energy available from the power assembly 2400 when the power assembly 2400 is at a full charge level. In another instance, a usage cycle comprises a continuous energy drain from the power assembly 2400 exceeding a predetermined time limit. For example, a usage cycle may correspond to five minutes of continuous and/or total energy draw from the power assembly 2400. The power assembly 2400 may comprise a usage cycle circuit 2402 having a continuous power draw to maintain one or more components of the usage cycle circuit 2402, such as the use indicator 2406 and/or a counter 2408, in an active state.

[0146] The processor 2404 maintains a usage cycle count. The usage cycle count indicates the number of uses detected by the use indicator 2406 for the power assembly 2400 and/or the surgical instrument 2410. The processor 2404 increments and/or decrements the usage cycle count based on input from the use indicator 2406. The usage cycle count is used to control one or more operations of the power assembly 2400 and/or the surgical instrument 2410. For examplea power assembly 2400 is disabled when the usage cycle count exceeds a predetermined usage limit. Although the instances discussed herein are discussed with respect to incrementing the usage cycle count above a predetermined usage limit, those skilled in the art will recognize that the usage cycle count may start at a predetermined amount and may be decremented by the processor 2404. In this instance, the processor 2404 initiates and/or prevents one

or more operations of the power assembly 2400 when the usage cycle count falls below a predetermined usage limit.

[0147] The usage cycle count is maintained by a counter 2408. The counter 2408 comprises any suitable circuit, such as a memory module, an analog counter, and/or any circuit configured to maintain a usage cycle count. The counter 2408 may be formed integrally with the processor 2404. In other instances, the counter 2408 comprises a separate component, such as a solid state memory module. In some instances, the usage cycle count is provided to a remote system, such as a central database. The usage cycle count is transmitted by a communications module 2412 to the remote system. The communications module 2412 is configured to use any suitable communications medium, such as wired and/or wireless communication. In some instances, the communications module 2412 is configured to receive one or more instructions from the remote system, such as a control signal when the usage cycle count exceeds the predetermined usage limit.

[0148] The use indicator 2406 may be configured to monitor the number of modular components used with a surgical instrument 2410 coupled to the power assembly 2400. A modular component may comprise a modular shaft, a modular end effector, and/or any other modular component. The use indicator 2406 monitors the use of one or more disposable components, such as insertion and/or deployment of a staple cartridge within an end effector coupled to the surgical instrument 2410. The use indicator 2406 comprises one or more sensors for detecting the exchange of one or more modular and/or disposable components of the surgical instrument 2410.

[0149] The use indicator 2406 may be configured to monitor single patient surgical procedures performed while the power assembly 2400 is installed. For example, the use indicator 2406 is configured to monitor firings of the surgical instrument 2410 while the power assembly 2400 is coupled to the surgical instrument 2410. A firing may correspond to deployment of a staple cartridge, application of electrosurgical energy, and/or any other suitable surgical event. The use indicator 2406 comprises one or more circuits for measuring the number of firings while the power assembly 2400 is installed. The use indicator 2406 provides a signal to the processor 2404 when a single patient procedure is performed and the processor 2404 increments the usage cycle count.

[0150] The use indicator 2406 may comprise a circuit configured to monitor one or more parameters of the power source 2414, such as a current draw from the power source 2414. The one or more parameters of the power source 2414 correspond to one or more operations performable by the surgical instrument 2410, such as a cutting and sealing operation. The use indicator 2406 provides the one or more parameters to the processor 2404, which increments the usage cycle count when the one or more parameters indicate that a procedure has been performed.

[0151] The use indicator 2406 may comprise a timing circuit configured to increment a usage cycle count after a predetermined time period. The predetermined time period corresponds to a single patient procedure time, which is the time required for an operator to perform a procedure, such as a cutting and sealing procedure. When the power assembly 2400 is coupled to the surgical instrument 2410, the processor 2404 polls the use indicator 2406 to determine when the single patient procedure time has expired. When the predetermined time period has elapsed, the processor 2404 increments the usage cycle count. After incrementing the usage cycle count, the processor 2404 resets the timing circuit of the use indicator 2406.

[0152] The use indicator 2406 may comprises a time constant that approximates the single patient procedure time. FIG. 55 illustrates one instance of power assembly 2500 comprising a usage cycle circuit 2502 having a resistor-capacitor (RC) timing circuit 2506. The RC timing circuit 2506 comprises a time constant defined by a resistor-capacitor pair. The time constant is defined by the values of the resistor 2516 and the capacitor 2518 When the power assembly 2500 is installed in a surgical instrument, a processor 2504 polls the RC timing circuit 2506. When one or more parameters of the RC timing circuit 2506 are below a predetermined threshold, the processor 2504 increments the usage cycle count. For example, the processor 2504 may poll the voltage of the capacitor 2518 of the resistor-capacitor pair 2506. When the voltage of the capacitor 2518 is below a predetermined threshold, the processor 2504 increment the usage cycle count. The processor 2504 may be coupled to the RC timing circuit 2506 by, for example, an A/D 2520. After incrementing the usage cycle count, the processor 2504 turns on a transistor 2522 to connect the RC timing circuit 2506 to a power source 2514 to charge the capacitor 2518 of the RC timing circuit 2506. Once the capacitor 2518 is fully charged, the transistor 2522 is opened and the RC timing circuit 2506 is allowed to discharge, as governed by the time constant, to indicate a subsequent single patient procedure.

[0153] FIG. 56 illustrates one instance of a power assembly 2550 comprising a usage cycle circuit 2552 having a rechargeable battery 2564 and a clock 2560. When the power assembly 2550 is installed in a surgical instrument, the rechargeable battery 2564 is charged by the power source 2558. The rechargeable battery 2564 comprises enough power to run the clock 2560 for at least the single patient procedure time. The clock 2560 may comprise a real time clock, a processor configured to implement a time function, or any other suitable timing circuit. The processor 2554 receives a signal from the clock 2560 and increments the usage cycle count when the clock 2560 indicates that the single patient procedure time has been exceeded. The processor 2554 resets the clock 2560 after incrementing the usage cycle count. For example, the processor 2554 closes a transistor 2562 to recharge the rechargeable battery 2564. Once the re-

chargeable battery 2564 is fully charged, the processor 2554 opens the transistor 2562, and allows the clock 2560 to run while the rechargeable battery 2564 discharges.

[0154] Referring back to FIG. 54 the use indicator 2406 comprises a sensor configured to monitor one or more environmental conditions experienced by the power assembly 2400. For example, the use indicator 2406 may comprise an accelerometer. The accelerometer is configured to monitor acceleration of the power assembly 2400. The power assembly 2400 comprises a maximum acceleration tolerance. Acceleration above a predetermined threshold indicates that the power assembly 2400 has been dropped. When the use indicator 2406 detects acceleration above the maximum acceleration tolerance, the processor 2404 increments a usage cycle count. In some instances, the use indicator 2406 comprises a moisture sensor. The moisture sensor is configured to indicate when the power assembly 2400 has been exposed to moisture. The moisture sensor may comprise an immersion sensor configured to indicate when the power assembly 2400 has been fully immersed in a cleaning fluid, a moisture sensor configured to indicate when moisture is in contact with the power assembly 2400 during use, and/or any other suitable moisture sensor.

[0155] The use indicator 2406 may comprise a chemical exposure sensor. The chemical exposure sensor is configured to indicate when the power assembly 2400 has come into contact with harmful and/or dangerous chemicals. For example, during a sterilization procedure, an inappropriate chemical may be used that leads to degradation of the power assembly 2400. The processor 2404 increments the usage cycle count when the use indicator 2406 detects an inappropriate chemical.

[0156] The usage cycle circuit 2402 may be configured to monitor the number of reconditioning cycles experienced by the power assembly 2400. A reconditioning cycle may comprise a cleaning cycle, a sterilization cycle, a charging cycle, routine and/or preventative maintenance, and/or any other suitable reconditioning cycle. The use indicator 2406 is configured to detect a reconditioning cycle. For example, the use indicator 2406 may comprise a moisture sensor to detect a cleaning and/or sterilization cycle. In some instances, the usage cycle circuit 2402 monitors the number of reconditioning cycles experienced by the power assembly 2400 and disables the power assembly 2400 after the number of reconditioning cycles exceeds a predetermined threshold.

[0157] The usage cycle circuit 2402 may be configured to monitor the number of power assembly 2400 exchanges. The usage cycle circuit 2402 increments the usage cycle count each time the power assembly 2400 is exchanged. When the maximum number of exchanges is exceeded, the usage cycle circuit 2402 locks out the power assembly 2400 and/or the surgical instrument 2410. When the power assembly 2400 is coupled the surgical instrument 2410, the usage cycle circuit 2402 may identify the serial number of the power assembly 2400 and locks the power assembly 2400 such that the power assembly 2400 is usable only with the surgical instrument 2410. The usage cycle circuit 2402 increments the usage cycle each time the power assembly 2400 is removed from and/or coupled to the surgical instrument 2410.

[0158] The usage cycle count may correspond to sterilization of the power assembly 2400. The use indicator 2406 comprises a sensor configured to detect one or more parameters of a sterilization cycle, such as a temperature parameter, a chemical parameter, a moisture parameter, and/or any other suitable parameter. The processor 2404 increments the usage cycle count when a sterilization parameter is detected. The usage cycle circuit 2402 disables the power assembly 2400 after a predetermined number of sterilizations. In some instances, the usage cycle circuit 2402 is reset during a sterilization cycle, a voltage sensor to detect a recharge cycle, and/or any suitable sensor. The processor 2404 increments the usage cycle count when a reconditioning cycle is detected. The usage cycle circuit 2402 is disabled when a sterilization cycle is detected. The usage cycle circuit 2402 is reactivated and/or reset when the power assembly 2400 is coupled to the surgical instrument 2410. In some instances, the use indicator comprises a zero power indicator. The zero power indicator changes state during a sterilization cycle and is checked by the processor 2404 when the power assembly 2400 is coupled to a surgical instrument 2410. When the zero power indicator indicates that a sterilization cycle has occurred, the processor 2404 increments the usage cycle count.

[0159] A counter 2408 maintains the usage cycle count. The counter 2408 may comprise a non-volatile memory module. The processor 2404 increments the usage cycle count stored in the non-volatile memory module each time a usage cycle is detected. The memory module is accessed by the processor 2404 and/or a control circuit, such as the control circuit 1100. When the usage cycle count exceeds a predetermined threshold, the processor 2404 disables the power assembly 2400. In some instances, the usage cycle count is maintained by a plurality of circuit components. For example the counter 2408 comprises a resistor (or fuse) pack. After each use of the power assembly 2400, a resistor (or fuse) is burned to an open position, changing the resistance of the resistor pack. The power assembly 2400 and/or the surgical instrument 2410 reads the remaining resistance. When the last resistor of the resistor pack is burned out, the resistor pack has a predetermined resistance, such as an infinite resistance corresponding to an open circuit, which indicates that the power assembly 2400 has reached its usage limit. In some instances, the resistance of the resistor pack is used to derive the number of uses remaining.

[0160] The usage cycle circuit 2402 may prevent further use of the power assembly 2400 and/or the surgical instrument 2410 when the usage cycle count exceeds a predetermined usage limit. The usage cycle count asso-

ciated with the power assembly 2400 also may be provided to an operator utilizing a screen formed integrally with the surgical instrument 2410. The surgical instrument 2410 provides an indication to the operator that the usage cycle count has exceeded a predetermined limit for the power assembly 2400, and prevents further operation of the surgical instrument 2410.

[0161] The usage cycle circuit 2402 may be configured to physically prevent operation when the predetermined usage limit is reached. For example, the power assembly 2400 comprises a shield configured to deploy over contacts of the power assembly 2400 when the usage cycle count exceeds the predetermined usage limit. The shield prevents recharge and use of the power assembly 2400 by covering the electrical connections of the power assembly 2400.

[0162] The usage cycle circuit 2402 may be located at least partially within the surgical instrument 2410 and is configured to maintain a usage cycle count for the surgical instrument 2410. FIG. 54 illustrates one or more components of the usage cycle circuit 2402 within the surgical instrument 2410 in phantom, illustrating the alternative positioning of the usage cycle circuit 2402. When a predetermined usage limit of the surgical instrument 2410 is exceeded, the usage cycle circuit 2402 disables and/or prevents operation of the surgical instrument 2410. The usage cycle count is incremented by the usage cycle circuit 2402 when the use indicator 2406 detects a specific event and/or requirement, such as firing of the surgical instrument 2410, a predetermined time period corresponding to a single patient procedure time, based on one or more motor parameters of the surgical instrument 2410, in response to a system diagnostic indicating that one or more predetermined thresholds are met, and/or any other suitable requirement. As discussed above the use indicator 2406 comprises a timing circuit corresponding to a single patient procedure time. In other instances, the use indicator 2406 comprises one or more sensors configured to detect a specific event and/or condition of the surgical instrument 2410.

[0163] The usage cycle circuit 2402 may be configured to prevent operation of the surgical instrument 2410 after the predetermined usage limit is reached. The surgical instrument 2410 may comprise a visible indicator to indicate when the predetermined usage limit has been reached and/or exceeded. For example, a flag, such as a red flag, may pop-up from the surgical instrument 2410, such as from the handle, to provide a visual indication to the operator that the surgical instrument 2410 has exceeded the predetermined usage limit. As another example, the usage cycle circuit 2402 may be coupled to a display formed integrally with the surgical instrument 2410. The usage cycle circuit 2402 displays a message indicating that the predetermined usage limit has been exceeded. The surgical instrument 2410 may provide an audible indication to the operator that the predetermined usage limit has been exceeded. For example the surgical instrument 2410 emits an audible tone when the predetermined usage limit is exceeded and the power assembly 2400 is removed from the surgical instrument 2410. The audible tone indicates the last use of the surgical instrument 2410 and indicates that the surgical instrument 2410 should be disposed or reconditioned.

[0164] The usage cycle circuit 2402 may be configured to transmit the usage cycle count of the surgical instrument 2410 to a remote location, such as a central database. The usage cycle circuit 2402 comprises a communications module 2412 configured to transmit the usage cycle count to the remote location. The communications module 2412 may utilize any suitable communications system, such as wired or wireless communications system. The remote location may comprise a central database configured to maintain usage information. In some instances, when the power assembly 2400 is coupled to the surgical instrument 2410, the power assembly 2400 records a serial number of the surgical instrument 2410. The serial number is transmitted to the central database when the power assembly 2400 is coupled to a charger. The central database maintains a count corresponding to each use of the surgical instrument 2410. For example, a bar code associated with the surgical instrument 2410 may be scanned each time the surgical instrument 2410 is used. When the use count exceeds a predetermined usage limit, the central database provides a signal to the surgical instrument 2410 indicating that the surgical instrument 2410 should be discarded.

[0165] The surgical instrument 2410 may be configured to lock and/or prevent operation of the surgical instrument 2410 when the usage cycle count exceeds a predetermined usage limit. The surgical instrument 2410 may comprise a disposable instrument and is discarded after the usage cycle count exceeds the predetermined usage limit. In other instances, the surgical instrument 2410 comprises a reusable surgical instrument which may be reconditioned after the usage cycle count exceeds the predetermined usage limit. The surgical instrument 2410 initiates a reversible lockout after the predetermined usage limit is met. A technician reconditions the surgical instrument 2410 and releases the lockout utilizing a specialized technician key configured to reset the usage cycle circuit 2402.

[0166] The power assembly 2400 may be charged and sterilized simultaneously prior to use. FIG. 57 illustrates one instance of a combined sterilization and charging system 2600 configured to charge and sterilize a battery 2602 simultaneously. The combined sterilization and charging system 2600 comprises a sterilization chamber 2604. A battery 2602 is placed within the sterilization chamber 2604. In some instances, the battery 2602 is coupled to a surgical instrument. A charging cable 2606 is mounted through a wall 2608 of the sterilization chamber 2604. The wall 2608 is sealed around the charging cable 2606 to maintain a sterile environment within the sterilization chamber 2604 during sterilization. The charging cable 2606 comprises a first end configured to couple to the power assembly 2602 within the sterilization

chamber 2604 and a second end coupled to a battery charger 2610 located outside of the sterilization chamber 2604. Because the charging cable 2606 passes through the wall 2608 of the sterilization chamber 2604 while maintaining a sterile environment within the sterilization chamber 2604, the power assembly 2602 may be charged and sterilized simultaneously.

[0167] The charging profile applied by the battery charger 2610 is configured to match the sterilization cycle of the sterilization chamber 2604. For example a sterilization procedure time is about 28 to 38 minutes. The battery charger 2610 is configured to provide a charging profile that charges the battery during the sterilization procedure time. In some instances, the charging profile may extend over a cooling-off period following the sterilization procedure. The charging profile may be adjusted by the battery charger 2610 based on feedback from the power assembly 2602 and/or the sterilization chamber 2604. For example a sensor 2612 is located within the sterilization chamber 2604. The sensor 2612 is configured to monitor one or more characteristics of the sterilization chamber 2604, such as chemicals present in the sterilization chamber 2604, temperature of the sterilization chamber 2604, and/or any other suitable characteristic of the sterilization chamber 2604. The sensor 2612 is coupled to the battery charger 2610 by a cable 2614 extending through the wall 2608 of the sterilization chamber 2604. The cable 2614 is sealed such that the sterilization chamber 2604 may maintain a sterile environment. The battery charger 2610 adjusts the charging profile based on feedback from the sensor 2614. For example the battery charger 2610 receives temperature data from the sensor 2612 and adjusts the charging profile when the temperature of the sterilization chamber 2604 and/or the power assembly 2602 exceeds a predetermined temperature. As another example, the battery charger 2610 receives chemical composition information from the sensor 2612 and prevents charging of the power assembly 2602 when a chemical, such as H_2O_2, approaches explosive limits.

[0168] FIG. 58 illustrates one instance of a combination sterilization and charging system 2650 configured for a power assembly 2652 having a battery charger 2660 formed integrally therewith. An alternating current (AC) source 2666 is located outside of the sterilization chamber 2654 and is coupled the battery charger 2660 by an AC cable 2656 mounted through a wall 2658 of the sterilization chamber 2654. The wall 2658 is sealed around the AC cable 2656. The battery charger 2660 operates similar to the battery charger 2610 illustrated in FIG. 57. In some instances, the battery charger 2660 receives feedback from a sensor 2662 located within the sterilization chamber 2654 and coupled to the battery charger 2660 by a cable 2664.

[0169] The surgical instrument can include a magnet and a sensor. In combination, the magnet and the sensor can cooperate to detect various conditions of a fastener cartridge, such as the presence of a fastener cartridge in an end effector of the surgical instrument, the type of fastener cartridge loaded in the end effector, and/or the firing state of a loaded fastener cartridge. Referring now to FIG. 62, a jaw 902 of an end effector 900 comprises a magnet 910 and a fastener cartridge 920 comprises a sensor 930. The magnet 910 is positioned at the distal end 906 of an elongate channel 904 sized and configured to receive the fastener cartridge 920. Furthermore, the sensor 930 is at least partially embedded or retained in the distal end 926 of the nose 924 of the fastener cartridge 920. The sensor 924 is in signal communication with the microcontroller of the surgical instrument.

[0170] The sensor 930 detects the presence of the magnet 910 when the fastener cartridge 920 is positioned in the elongate channel 904 of the jaw 902. The sensor 930 detects when the fastener cartridge 920 is improperly positioned in the elongate channel 904 and/or not loaded into the elongate channel 904 and can communicate the cartridge loading state to the microcontroller of the surgical system. The magnet 910 can be positioned in the fastener cartridge 920 and the sensor 930 can be positioned in the end effector 900. The sensor 930 may detect the type of fastener cartridge 920 loaded in the end effector 900. For example, different types of fastener cartridges can have different magnetic arrangements, such as different placement(s) relative to the cartridge body or other cartridge components, different polarities, and/or different magnetic strengths. In such instances, the sensor 930 can detect the type of cartridge, e.g., the cartridge length, the number of fasteners and/or the fastener height(s), positioned in the jaw 902 based on the detected magnetic signal. Additionally or alternatively, the sensor 930 can detect if the fastener cartridge 920 is properly seated in the end effector 900. For example, the end effector 900 and the fastener cartridge 920 comprise a plurality of magnets and/or a plurality of sensors and the sensor(s) can detect whether the fastener cartridge 920 is properly positioned and/or aligned based on the position of multiple magnets relative to the sensor(s).

[0171] Referring now to FIG. 63 an end effector 3000 includes a plurality of magnets and a plurality of sensors. A jaw 3002 includes a plurality of magnets 3010, 3012 positioned at the distal end 3006 thereof. The fastener cartridge 3020 includes a plurality of sensors 3030, 3032 positioned at the distal end 3026 of the nose 3024. The sensors 3030, 3032 detect the presence of the fastener cartridge 3020 in the elongate channel 3004 of the jaw 3002. The sensors 3030, 3032 comprise Hall Effect sensors. Various sensors are described in U.S. Patent No. 8,210,411, filed September 23, 2008, and entitled MOTOR-DRIVEN SURGICAL CUTTING INSTRUMENT. U.S. Patent No. 8,210,411, filed September 23, 2008, and entitled MOTOR-DRIVEN SURGICAL CUTTING INSTRUMENT. The addition of an additional sensor or sensors can provide a greater bandwidth signal which can provide further and/or improved information to the microcontroller of the surgical instrument. Additionally or alternatively, additional sensors can determine if the fastener

cartridge 3020 is properly seated in the elongate channel of the jaw 3002.

[0172] A magnet can be positioned on a moveable component of a fastener cartridge. For example, a magnet can be positioned on a component of the fastener cartridge that moves during a firing stroke. In such instances, a sensor in the end effector can detect the firing state of the fastener cartridge. For example, referring now to FIG. 64, a magnet 3130 is positioned on the sled 3122 of a fastener cartridge 3120. Moreover, a sensor 1110 is positioned in the jaw 3102 of the end effector 3100. The sled 3122 translates during a firing stroke. Moreover the sled 3120 remains at the distal end of the fastener cartridge 3120 after the firing stroke. Stated differently, after the cartridge has been fired, the sled 3120 remains at the distal end of the fastener cartridge 3120. Accordingly, the sensor 3110 can detect the position of the magnet 3130 and the corresponding sled 3120 to determine the firing state of the fastener cartridge 3120. For example, when the sensor 3110 detects the proximal position of the magnet 3130, the fastener cartridge 3120 is unfired and ready to fire and when the sensor 3110 detects the distal position of the magnet 3130, the fastener cartridge 3120 is spent. Referring now to FIG. 65 a jaw 3202 of an end effector 3200 includes a plurality of sensors 3210, 3212. A proximal sensor 3212 is positioned in the proximal portion of the jaw 3202, and a distal sensor 3210 is positioned in the distal portion of the jaw 3202. In such instances, the sensors 3210, 3212 can detect the position of the sled 3122 as the sled 3122 moves during a firing stroke. The sensors 3210, 3212 can comprise Hall Effect sensors.

[0173] Additionally or alternatively, an end effector can include a plurality of electrical contacts, which can detect the presence and/or firing state of a fastener cartridge. Referring now to FIG. 66, an end effector 3300 includes a jaw 3302 defining a channel 3304 configured to receive a fastener cartridge 3320. The jaw 3302 and the fastener cartridge 3320 comprise electrical contacts. The elongate channel 3304 defines a bottom surface 3306, and an electrical contact 3310 is positioned on the bottom surface 3306. A plurality of electrical contacts 3310 can be defined in the elongate channel 3304. The electrical contacts 3310 form part of a firing-state circuit 3340, which is in signal communication with a microcontroller of the surgical system. For example, the electrical contacts 3310 are electrically coupled to and/or in communication with a power supply, and form electrically active ends of an open circuit. One of the electrical contacts 3310 can be powered such that a voltage potential is created intermediate the electrical contacts 3310. One of the contacts can be coupled to an output channel of the microprocessor which can apply a voltage potential to the contact. Another contact can be coupled to an input channel of the microprocessor. The electrical contacts 3310 are insulated from the frame 3306 of the jaw 3302. Referring still to FIG. 66, the fastener cartridge 3320 also includes an electrical contact 3330, or a plurality of electrical contacts. The electrical contact 3330 is positioned on a moveable element of the fastener cartridge 3320. For example, the electrical contact 3330 is positioned on the sled 3322 of the fastener cartridge 3320, and thus, the electrical contact 3330 moves in the fastener cartridge 3320 during a firing stroke.

[0174] The electrical contact 3330 comprises a metallic bar or plate on the sled 3320. The electrical contact 3330 in the fastener cartridge 3320 cooperates with the electrical contact(s) 3310 in the end effector 3300. The electrical contact 3330 contacts the electrical contact(s) 3310 when the sled 3322 is positioned in a particular position, or a range of positions, in the fastener cartridge 3320. For example, the electrical contact 3330 contacts the electrical contacts 3310 when the sled 3322 is unfired, and thus, positioned in a proximal position in the fastener cartridge 3320. In such circumstances, the electrical contact 3330 closes the circuit between the electrical contacts 3310. Moreover, the firing-state circuit 3340 communicates the closed circuit, i.e., the unfired cartridge indication, to the microcontroller of the surgical system. In such instances, when the sled 3322 is fired distally during a firing stroke, the electrical contact 3330 moves out of electrically contact with the electrical contacts 3310. Accordingly, the firing-state circuit 3340 communicates the open circuit, i.e., the fired cartridge indication, to the microcontroller of the surgical system. The microcontroller may only initiate a firing stroke when an unspent cartridge is indicated by the firing-state circuit 3340. The electrical contact 3330 can comprise an electromechanical fuse. The fuse breaks or shorts when the sled 3322 is fired through a firing stroke.

[0175] Additionally or alternatively, referring now to FIG. 67, an end effector 3400 includes a jaw 3402 and a cartridge-present circuit 3440. The jaw 3402 comprises an electrical contact 3410, or a plurality of electrical contacts 3410, in an elongate channel 3404 thereof. Furthermore, a fastener cartridge 3420 includes an electrical contact 3430, or a plurality of electrical contacts 3430, on an outer surface of the fastener cartridge 3420. The electrical contacts 3430 are positioned and/or mounted to a fixed or stationary component of the fastener cartridge 3420. The electrical contacts 3430 of the fastener cartridge 3420 contact the electrical contacts 3410 of the end effector 3400 when the fastener cartridge 3420 is loaded into the elongate channel 3404. Prior to placement of the fastener cartridge 3420 in the elongate channel 3404, the cartridge-present circuit 3440 can be an open circuit. When the fastener cartridge 3420 is properly seated in the jaw 3402, the electrical contacts 3410 and 3430 form the closed cartridge-present circuit 3440. In instances where the jaw 3402 and/or the fastener cartridge 3420 comprise a plurality of electrical contacts 3410, 3430, the cartridge-present circuit 3440 can comprise a plurality of circuits. Moreover the cartridge-present circuit 3440 can optionally identify the type of cartridge loaded in the jaw 3402 based on the number and/or arrangement of electrical contacts 3430 on the

fastener cartridge 3420 and the corresponding open and/or closed circuits of the cartridge-present circuit 3440.

[0176] Moreover, the electrical contacts 3410 in the jaw 3402 are in signal communication with the microcontroller of the surgical system. The electrical contacts 3410 can be wired to a power source and/or can communicate with the microcontroller via a wired and/or wireless connection. The cartridge-present circuit 3440 communicates the cartridge presence or absence to the microcontroller of the surgical system. A firing stroke is prevented when the cartridge-present circuit 3440 indicates the absence of a fastener cartridge in the end effector jaw 3402. Moreover, a firing stroke is permitted when the cartridge--present circuit 3440 indicates the presence of a fastener cartridge 3420 in the end effector jaw 3402.

[0177] As described throughout the present disclosure, various sensors, programs, and circuits can detect and measure numerous characteristics of the surgical instrument and/or components thereof, surgical use or operation, and/or the tissue and/or operating site. For example, tissue thickness, the identification of the instrument components, usage and feedback data from surgical functions, and error or fault indications can be detected by the surgical instrument. In certain instances, the fastener cartridge can include a nonvolatile memory unit, which can be embedded or removably coupled to the fastener cartridge. Such a nonvolatile memory unit can be in signal communication with the microcontroller via hardware, such as the electrical contacts described herein, radio frequency, or various other suitable forms of data transmission. In such instances, the microcontroller can communicate data and feedback to the nonvolatile memory unit in the fastener cartridge, and thus, the fastener cartridge can store information. In various instances, the information can be securely stored and access thereto can be restricted as suitable and appropriate for the circumstances.

[0178] In certain instances, the nonvolatile memory unit can comprise information regarding the fastener cartridge characteristics and/or the compatibility thereof with various other components of the modular surgical system. For example, when the fastener cartridge is loaded into an end effector, the nonvolatile memory unit can provide compatibility information to the microcontroller of the surgical system. In such instances, the microcontroller can verify the validity or compatibility of the modular assembly. For example, the microcontroller can confirm that the handle component can fire the fastener cartridge and/or that the fastener cartridge appropriate fits the end effector. The microcontroller can communicate the compatibility or lack thereof to the operator of the surgical system, and/or may prevent a surgical function if the modular components are incompatible.

[0179] As described herein, the surgical instrument can include a sensor, which can cooperate with a magnet to detect various characteristics of the surgical instrument, operation, and surgical site. In certain instances, the sensor can comprise a Hall Effect sensor and, in other instances, the sensor can comprise a magnetoresistive sensor as depicted in FIGS. 68(A)-68(C). As described in greater detail herein, a surgical end effector can comprise a first jaw, which can be configured to receive a fastener cartridge, and a second jaw. The first jaw and/or the fastener cartridge can comprise a magnetic element, such as a permanent magnet and the second jaw can comprise a magnetoresistive sensor. In other instances, the first jaw and/or the fastener cartridge can comprise a magnetoresistive sensor and the second jaw can comprise a magnetic element. The magnetoresistive sensor may have various characteristics listed in the table in FIG. 68(C) and/or similar specifications. In certain instances, the change in resistance caused by movement of the magnetic element relative to the magnetoresistive sensor can affect and/or vary the properties of the magnetic circuit depicted in FIG. 68(B).

[0180] In various instances, the magnetoresistive sensor can detect the position of the magnetic element, and thus, can detect the thickness of tissue clamped between the opposing first and second jaws. The magnetoresistive sensor can be in signal communication with the microcontroller, and the magnetoresistive sensor can wirelessly transmit data to an antenna in signal communication with the microcontroller. In various instances, a passive circuit can comprise the magnetoresistive sensor. Moreover, the antenna can be positioned in the end effector, and can detect a wireless signal from the magnetoresistive sensor and/or microprocessor operably coupled thereto. In such circumstances, an exposed electrical connection between the end effector comprising the antenna and the fastener cartridge comprising the magnetoresistive sensor can be avoided. Furthermore the antenna can be wired and/or in wireless communication with the microcontroller of the surgical instrument.

[0181] Tissue can contain fluid and, when the tissue is compressed, the fluid may be pressed from the compressed tissue. For example, when tissue is clamped between opposing jaws of a surgical end effector, fluid may flow and/or be displaced from the clamped tissue. Fluid flow or displacement in clamped tissue can depend on various characteristics of the tissue, such as the thickness and/or type of tissue, as well as various characteristics of the surgical operation, such as the desired tissue compression and/or the elapsed clamping time. In various instances, fluid displacement between the opposing jaws of an end effector may contribute to malformation of staples formed between the opposing jaws. For example, the displacement of fluid during and/or following staple formation can induce bending and/or other uncontrolled movement of a staple away from its desired or intended formation. Accordingly it may be desirable to control the firing stroke, e.g., to control the firing speed, in relationship to the detected fluid flow, or lack thereof, intermediate opposing jaws of a surgical end effector.

[0182] In various instances, the fluid displacement in clamped tissue can be determined or approximated by

various measurable and/or detectable tissue characteristics. For example, the degree of tissue compression can correspond to the degree of fluid displacement in the clamped tissue. In various instances, a higher degree of tissue compression can correspond to more fluid flow and a reduced degree of tissue compression can correspond to less fluid flow. A sensor positioned in the end effector jaws can detect the force exerted on the jaws by the compressed tissue. Additionally or alternatively, a sensor on or operably associated with the cutting element can detect the resistance on the cutting element as the cutting element is advanced through, and transects, the clamped tissue. In such circumstances, the detected cutting and/or firing resistance can correspond to the degree of tissue compression. When tissue compression is high the cutting element resistance can be greater, and when tissue compression is lower the cutting element resistance can be reduced. Correspondingly, the cutting element resistance can indicate the amount of fluid displacement.

[0183] In certain instances, the fluid displacement in clamped tissue can be determined or approximated by the force required to fire the cutting element, i.e., the force-to-fire. The force-to-fire can correspond to the cutting element resistance. Furthermore, the force-to-fire can be measured or approximated by a microcontroller in signal communication with the electric motor that drives the cutting element. For example, where the cutting element resistance is higher, the electric motor can require more current to drive the cutting element through the tissue. Similarly, if the cutting element resistance is lower, the electric motor can require less current to drive the cutting element through the tissue. In such instances, the microcontroller can detect the amount of current drawn by the electric motor during the firing stroke. For example, the microcontroller can include a current sensor, which can detect the current utilized to fire the cutting element through the tissue.

[0184] Referring now to FIG. 60, a surgical instrument assembly or system can be configured to detect the compressive force in the clamped tissue. For example an electric motor can drive the firing element, and a microcontroller is in signal communication with the electric motor. As the electric motor drives the firing element, the microcontroller determines the current drawn by the electric motor. In such instances, the force-to-fire corresponds to the current drawn by the electric motor throughout the firing stroke, as described above. Referring still to FIG. 60, at step 3501, the microcontroller of the surgical instrument determines if the current drawn by the electric motor increases during the firing stroke and, if so, can calculate the percentage increase of the current.

[0185] The microcontroller can compare the current draw increase during the firing stroke to a predefined threshold value. For example, the predefined threshold value can be 5%, 10%, 25%, 50% and/or 100% and the microcontroller can compare the current increase detected during a firing stroke to the predefined threshold value. In other instances, the threshold increase can be a value or range of values between 5% and 100%, and, in still other instances, the threshold increase can be less than 5% or greater than 100%. For example, if the predefined threshold value is 50%, the microcontroller can compare the percentage of current draw change to 50%. In certain instances, the microcontroller can determine if the current drawn by the electric motor during the firing stroke exceeds a percentage of the maximum current or a baseline value. For example, the microcontroller can determine if the current exceeds 5%, 10%, 25%, 50% and/or 100% of the maximum motor current. In other instances, the microcontroller can compare the current drawn by the electric motor during the firing stroke to a predefined baseline value.

[0186] In various instances, the microcontroller can utilize an algorithm to determine the change in current drawn by the electric motor during a firing stroke. For example, the current sensor can detect the current drawn by the electric motor at various times and/or intervals during the firing stroke. The current sensor can continually detect the current drawn by the electric motor and/or can intermittently detect the current draw by the electric motor. In various instances, the algorithm can compare the most recent current reading to the immediately proceeding current reading. Additionally or alternatively, the algorithm can compare a sample reading within a time period X to a previous current reading. For example, the algorithm can compare the sample reading to a previous sample reading within a previous time period X, such as the immediately proceeding time period X. In other instances, the algorithm can calculate the trending average of current drawn by the motor. The algorithm can calculate the average current draw during a time period X that includes the most recent current reading and can compare that average current draw to the average current draw during an immediately proceeding time period time X.

[0187] Referring still to FIG. 60, if the microcontroller detects a current increase that is greater than the threshold change or value, the microcontroller proceeds to step 3503, and the firing speed of the firing element is reduced. For example, the microcontroller communicates with the electric motor to slow the firing speed of the firing element. The firing speed can be reduced by a predefined step unit and/or a predefined percentage. The microcontroller comprises a velocity control module, which can affect changes in the cutting element speed and/or can maintain the cutting element speed. The velocity control module can comprise a resistor, a variable resistor, a pulse width modulation circuit, and/or a frequency modulation circuit. Referring still to FIG. 60, if the current increase is less than the threshold value, the microcontroller proceeds to step 3505, wherein the firing speed of the firing element is maintained. The microcontroller continues to monitor the current drawn by the electric motor and changes thereto during at least a portion of the firing stroke. Moreover, the microcontroller and/or velocity con-

trol module thereof adjust the firing element velocity throughout the firing stroke in accordance with the detected current draw. In such instances, controlling the firing speed based on the approximated fluid flow or displacement in the clamped tissue can reduce the incidence of staple malformation in the clamped tissue.

[0188] Referring now to FIG. 61 the microcontroller adjusts the firing element velocity by pausing the firing element for a predefined period of time. For example, similar to the embodiment depicted in FIG. 60, if the microcontroller detects a current draw that exceeds a predefined threshold value at step 3511, the microcontroller proceeds to step 3513 and the firing element is paused. The microcontroller can pause movement and/or translation of the firing element for one second if the current increase measured by the microcontroller exceeds the threshold value. In other instances, the firing stroke can be paused for a fraction of a second and/or more than one second. Similar to the process described above, if the current draw increase is less than the threshold value, the microcontroller proceeds to step 3515 and the firing element continues to progress through the firing stroke without adjusting the velocity of the firing element. The microcontroller can be configured to pause and slow the firing element during a firing stroke. For example, for a first increase in current draw, the firing element can be paused, and for a second, different increase in current draw, the velocity of the firing element can be reduced. In still other circumstances, the microcontroller can command an increase in the velocity of the firing element if the current draw decreases below a threshold value.

[0189] The surgical instruments described herein may comprise one or more processors (e.g., microprocessor, microcontroller) coupled to various sensors. In addition, to the processor(s), a storage (having operating logic) and communication interface, are coupled to each other.

[0190] The processor may be configured to execute the operating logic. The processor may be any one of a number of single or multi-core processors known in the art. The storage may comprise volatile and non-volatile storage media configured to store persistent and temporal (working) copy of the operating logic.

[0191] The operating logic may be configured to process the collected biometric associated with motion data of the user, as described above. The operating logic may be configured to perform the initial processing, and transmit the data to the computer hosting the application to determine and generate instructions. For these embodiments, the operating logic may be further configured to receive information from and provide feedback to a hosting computer. In alternate embodiments, the operating logic may be configured to assume a larger role in receiving information and determining the feedback. In either case, whether determined on its own or responsive to instructions from a hosting computer, the operating logic may be further configured to control and provide feedback to the user.

[0192] The operating logic may be implemented in instructions supported by the instruction set architecture (ISA) of the processor, or in higher level languages and compiled into the supported ISA. The operating logic may comprise one or more logic units or modules. The operating logic may be implemented in an object oriented manner. The operating logic may be configured to be executed in a multi-tasking and/or multi-thread manner. Alternatively or in addition, the operating logic may be implemented in hardware such as a gate array.

[0193] The communication interface may be configured to facilitate communication between a peripheral device and the computing system. The communication may include transmission of the collected biometric data associated with position, posture, and/or movement data of the user's body part(s) to a hosting computer, and transmission of data associated with the tactile feedback from the host computer to the peripheral device. The communication interface may be a wired or a wireless communication interface. An example of a wired communication interface may include, but is not limited to, a Universal Serial Bus (USB) interface. An example of a wireless communication interface may include, but is not limited to, a Bluetooth interface.

[0194] The processor may be packaged together with the operating logic. The processor may be packaged together with the operating logic to form a System in Package (SiP). The processor may be integrated on the same die with the operating logic. The processor may be packaged together with the operating logic to form a System on Chip (SoC).

[0195] Generally, software, program modules, and/or engines include any software element arranged to perform particular operations or implement particular abstract data types. Software, program modules, and/or engines can include routines, programs, objects, components, data structures and the like that perform particular tasks or implement particular abstract data types. An implementation of the software, program modules, and/or engines components and techniques may be stored on and/or transmitted across some form of computer-readable media. In this regard, computer-readable media can be any available medium or media useable to store information and accessible by a computing device. Some embodiments also may be practiced in distributed computing environments where operations are performed by one or more remote processing devices that are linked through a communications network. In a distributed computing environment, software, program modules, and/or engines may be located in both local and remote computer storage media including memory storage devices. A memory such as a random access memory (RAM) or other dynamic storage device may be employed for storing information and instructions to be executed by the processor. The memory also may be used for storing temporary variables or other intermediate information during execution of instructions to be executed by the processor.

[0196] Although some embodiments may be illustrated

and described as comprising functional components, software, engines, and/or modules performing various operations, it can be appreciated that such components or modules may be implemented by one or more hardware components, software components, and/or combination thereof. The functional components, software, engines, and/or modules may be implemented by logic (e.g., instructions, data, and/or code) to be executed by a logic device (e.g., processor). Such logic may be stored internally or externally to a logic device on one or more types of computer-readable storage media. Alternatively or in addition, the functional components such as software, engines, and/or modules may be implemented by hardware elements that may include processors, microprocessors, circuits, circuit elements (e.g., transistors, resistors, capacitors, inductors, and so forth), integrated circuits, application specific integrated circuits (ASIC), programmable logic devices (PLD), digital signal processors (DSP), field programmable gate array (FPGA), logic gates, registers, semiconductor device, chips, microchips, chip sets, and so forth.

[0197] Examples of software, engines, and/or modules may include software components, programs, applications, computer programs, application programs, system programs, machine programs, operating system software, middleware, firmware, software modules, routines, subroutines, functions, methods, procedures, software interfaces, application program interfaces (API), instruction sets, computing code, computer code, code segments, computer code segments, words, values, symbols, or any combination thereof. Determining whether an embodiment is implemented using hardware elements and/or software elements may vary in accordance with any number of factors, such as desired computational rate, power levels, heat tolerances, processing cycle budget, input data rates, output data rates, memory resources, data bus speeds and other design or performance constraints.

[0198] One or more of the modules described herein may comprise one or more embedded applications implemented as firmware, software, hardware, or any combination thereof. One or more of the modules described herein may comprise various executable modules such as software, programs, data, drivers, application program interfaces (APIs), and so forth. The firmware may be stored in a memory of the controller 2016 and/or the controller 2022 which may comprise a nonvolatile memory (NVM), such as in bit-masked read-only memory (ROM) or flash memory. In various implementations, storing the firmware in ROM may preserve flash memory. The nonvolatile memory (NVM) may comprise other types of memory including programmable ROM (PROM), erasable programmable ROM (EPROM), electrically erasable programmable ROM (EEPROM), or battery backed random-access memory (RAM) such as dynamic RAM (DRAM), Double-Data-Rate DRAM (DDRAM), and/or synchronous DRAM (SDRAM).

[0199] In some cases, various embodiments may be implemented as an article of manufacture. The article of manufacture may include a computer readable storage medium arranged to store logic, instructions and/or data for performing various operations of one or more embodiments. In various embodiments the article of manufacture may comprise a magnetic disk, optical disk, flash memory or firmware containing computer program instructions suitable for execution by a general purpose processor or application specific processor. The embodiments, however, are not limited in this context.

[0200] The functions of the various functional elements, logical blocks, modules, and circuits elements described in connection with the embodiments disclosed herein may be implemented in the general context of computer executable instructions, such as software, control modules, logic, and/or logic modules executed by the processing unit. Generally, software, control modules, logic, and/or logic modules comprise any software element arranged to perform particular operations. Software, control modules, logic, and/or logic modules can comprise routines, programs, objects, components, data structures and the like that perform particular tasks or implement particular abstract data types. An implementation of the software, control modules, logic, and/or logic modules and techniques may be stored on and/or transmitted across some form of computer-readable media. In this regard, computer-readable media can be any available medium or media useable to store information and accessible by a computing device. Some embodiments also may be practiced in distributed computing environments where operations are performed by one or more remote processing devices that are linked through a communications network. In a distributed computing environment, software, control modules, logic, and/or logic modules may be located in both local and remote computer storage media including memory storage devices.

[0201] Additionally, it is to be appreciated that the embodiments described herein illustrate example implementations, and that the functional elements, logical blocks, modules, and circuits elements may be implemented in various other ways which are consistent with the described embodiments. Furthermore, the operations performed by such functional elements, logical blocks, modules, and circuits elements may be combined and/or separated for a given implementation and may be performed by a greater number or fewer number of components or modules. As will be apparent to those of skill in the art upon reading the present disclosure, each of the individual embodiments described and illustrated herein has discrete components and features which may be readily separated from or combined with the features of any of the other several aspects without departing from the scope of the present disclosure. Any recited method can be carried out in the order of events recited or in any other order which is logically possible.

[0202] Unless specifically stated otherwise, it may be appreciated that terms such as "processing," "comput-

ing," "calculating," "determining," or the like, refer to the action and/or processes of a computer or computing system, or similar electronic computing device, such as a general purpose processor, a DSP, ASIC, FPGA or other programmable logic device, discrete gate or transistor logic, discrete hardware components, or any combination thereof designed to perform the functions described herein that manipulates and/or transforms data represented as physical quantities (e.g., electronic) within registers and/or memories into other data similarly represented as physical quantities within the memories, registers or other such information storage, transmission or display devices.

[0203] It is worthy of note that some embodiments may be described using the expression "coupled" and "connected" along with their derivatives. These terms are not intended as synonyms for each other. For example, some embodiments may be described using the terms "connected" and/or "coupled" to indicate that two or more elements are in direct physical or electrical contact with each other. The term "coupled," however, also may mean that two or more elements are not in direct contact with each other, but yet still co-operate or interact with each other. With respect to software elements the term "coupled" may refer to interfaces, message interfaces, application program interface (API), exchanging messages, and so forth.

[0204] The disclosed embodiments have application in conventional endoscopic and open surgical instrumentation as well as application in robotic-assisted surgery.

[0205] Embodiments of the devices disclosed herein can be designed to be disposed of after a single use, or they can be designed to be used multiple times. Embodiments may, in either or both cases, be reconditioned for reuse after at least one use. Reconditioning may include any combination of the steps of disassembly of the device, followed by cleaning or replacement of particular pieces, and subsequent reassembly. In particular, embodiments of the device may be disassembled, and any number of the particular pieces or parts of the device may be selectively replaced or removed in any combination. Upon cleaning and/or replacement of particular parts, embodiments of the device may be reassembled for subsequent use either at a reconditioning facility, or by a surgical team immediately prior to a surgical procedure. Those skilled in the art will appreciate that reconditioning of a device may utilize a variety of techniques for disassembly, cleaning/replacement, and reassembly. Use of such techniques, and the resulting reconditioned device, are all within the scope of the present application.

[0206] By way of example only, embodiments described herein may be processed before surgery. First, a new or used instrument may be obtained and when necessary cleaned. The instrument may then be sterilized. In one sterilization technique, the instrument is placed in a closed and sealed container, such as a plastic or TYVEK bag. The container and instrument may then be placed in a field of radiation that can penetrate the container, such as gamma radiation, x-rays, or high-energy electrons. The radiation may kill bacteria on the instrument and in the container. The sterilized instrument may then be stored in the sterile container. The sealed container may keep the instrument sterile until it is opened in a medical facility. A device also may be sterilized using any other technique known in the art, including but not limited to beta or gamma radiation, ethylene oxide, or steam.

[0207] One skilled in the art will recognize that the herein described components (e.g., operations), devices, objects, and the discussion accompanying them are used as examples for the sake of conceptual clarity and that various configuration modifications are contemplated. Consequently, as used herein, the specific exemplars set forth and the accompanying discussion are intended to be representative of their more general classes. In general, use of any specific exemplar is intended to be representative of its class, and the non-inclusion of specific components (e.g., operations), devices, and objects should not be taken limiting.

[0208] With respect to the use of substantially any plural and/or singular terms herein, those having skill in the art can translate from the plural to the singular and/or from the singular to the plural as is appropriate to the context and/or application. The various singular/plural permutations are not expressly set forth herein for sake of clarity.

[0209] The herein described subject matter sometimes illustrates different components contained within, or connected with, different other components. It is to be understood that such depicted architectures are merely examples and that in fact many other architectures may be implemented which achieve the same functionality. In a conceptual sense, any arrangement of components to achieve the same functionality is effectively "associated" such that the desired functionality is achieved. Hence, any two components herein combined to achieve a particular functionality can be seen as "associated with" each other such that the desired functionality is achieved, irrespective of architectures or intermedial components. Likewise, any two components so associated also can be viewed as being "operably connected," or "operably coupled," to each other to achieve the desired functionality, and any two components capable of being so associated also can be viewed as being "operably couplable," to each other to achieve the desired functionality. Specific examples of operably couplable include but are not limited to physically mateable and/or physically interacting components, and/or wirelessly interactable, and/or wirelessly interacting components, and/or logically interacting, and/or logically interactable components.

[0210] Some aspects may be described using the expression "coupled" and "connected" along with their derivatives. It should be understood that these terms are not intended as synonyms for each other. For example, some aspects may be described using the term "connected" to indicate that two or more elements are in direct

physical or electrical contact with each other. In another example, some aspects may be described using the term "coupled" to indicate that two or more elements are in direct physical or electrical contact. The term "coupled," however, also may mean that two or more elements are not in direct contact with each other, but yet still co-operate or interact with each other.

[0211] In some instances, one or more components may be referred to herein as "configured to," "configurable to," "operable/operative to," "adapted/adaptable," "able to," "conformable/conformed to," etc. Those skilled in the art will recognize that "configured to" can generally encompass active-state components and/or inactive-state components and/or standby-state components, unless context requires otherwise.

[0212] While particular aspects of the present subject matter described herein have been shown and described, it will be apparent to those skilled in the art that, based upon the teachings herein, changes and modifications may be made without departing from the subject matter described herein and its broader aspects and, therefore, the appended claims are to encompass within their scope all such changes and modifications as are within the true scope of the subject matter described herein. It will be understood by those within the art that, in general, terms used herein, and especially in the appended claims (e.g., bodies of the appended claims) are generally intended as "open" terms (e.g., the term "including" should be interpreted as "including but not limited to," the term "having" should be interpreted as "having at least," the term "includes" should be interpreted as "includes but is not limited to," etc.). It will be further understood by those within the art that when a specific number of an introduced claim recitation is intended, such an intent will be explicitly recited in the claim, and in the absence of such recitation no such intent is present. For example, as an aid to understanding, the following appended claims may contain usage of the introductory phrases "at least one" and "one or more" to introduce claim recitations. However, the use of such phrases should not be construed to imply that the introduction of a claim recitation by the indefinite articles "a" or "an" limits any particular claim containing such introduced claim recitation to claims containing only one such recitation, even when the same claim includes the introductory phrases "one or more" or "at least one" and indefinite articles such as "a" or "an" (e.g., "a" and/or "an" should typically be interpreted to mean "at least one" or "one or more"); the same holds true for the use of definite articles used to introduce claim recitations.

[0213] In addition, even when a specific number of an introduced claim recitation is explicitly recited, those skilled in the art will recognize that such recitation should typically be interpreted to mean at least the recited number (e.g., the bare recitation of "two recitations," without other modifiers, typically means at least two recitations, or two or more recitations). Furthermore, in those instances where a convention analogous to "at least one of A, B, and C, etc." is used, in general such a construction is intended in the sense one having skill in the art would understand the convention (e.g., "a system having at least one of A, B, and C" would include but not be limited to systems that have A alone, B alone, C alone, A and B together, A and C together, B and C together, and/or A, B, and C together, etc.). In those instances where a convention analogous to "at least one of A, B, or C, etc." is used, in general such a construction is intended in the sense one having skill in the art would understand the convention (e.g., "a system having at least one of A, B, or C" would include but not be limited to systems that have A alone, B alone, C alone, A and B together, A and C together, B and C together, and/or A, B, and C together, etc.). It will be further understood by those within the art that typically a disjunctive word and/or phrase presenting two or more alternative terms, whether in the description, claims, or drawings, should be understood to contemplate the possibilities of including one of the terms, either of the terms, or both terms unless context dictates otherwise. For example, the phrase "A or B" will be typically understood to include the possibilities of "A" or "B" or "A and B."

[0214] With respect to the appended claims, those skilled in the art will appreciate that recited operations therein may generally be performed in any order. Also, although various operational flows are presented in a sequence(s), it should be understood that the various operations may be performed in other orders than those which are illustrated, or may be performed concurrently. Examples of such alternate orderings may include overlapping, interleaved, interrupted, reordered, incremental, preparatory, supplemental, simultaneous, reverse, or other variant orderings, unless context dictates otherwise. Furthermore, terms like "responsive to," "related to," or other past-tense adjectives are generally not intended to exclude such variants, unless context dictates otherwise.

[0215] In summary, numerous benefits have been described which result from employing the concepts described herein. The foregoing description of the one or more embodiments has been presented for purposes of illustration and description. It is not intended to be exhaustive or limiting to the precise form disclosed. Modifications or variations are possible in light of the above teachings. The one or more embodiments were chosen and described in order to illustrate principles and practical application to thereby enable one of ordinary skill in the art to utilize the various embodiments and with various modifications as are suited to the particular use contemplated. It is intended that the claims submitted herewith define the exact scope.

Claims

1. A power assembly (2400), comprising:

a housing configured to couple to a surgical instrument, the housing comprising at least two electrical contacts;
a power source (2414) coupled to the at least two electrical contacts, wherein the power source is configured to provide power to the surgical instrument;
a usage cycle circuit (2402) configured to monitor a usage cycle of the power assembly and maintain a usage cycle count, wherein the usage cycle circuit comprises:

a processor (2404) configured to maintain the usage cycle count;
a use indicator (2406) in signal communication with the processor, wherein the use indicator is configured to detect a usage cycle of the power assembly, and wherein the processor is configured to modify the usage cycle count when the use indicator detects a usage cycle; and
wherein the usage cycle circuit is configured to disable operation of the power assembly when the usage cycle count is equal to a predetermined usage limit.

2. The power assembly of claim 1, wherein the use indicator comprises a timing circuit configured to monitor a single patient procedure time.

3. The power assembly of claim 1, wherein the use indicator comprises a resistor-capacitor circuit having a time constant corresponding to the single patient procedure time, and wherein the processor is configured to detect an electrical parameter of the resistor-capacitor circuit, and wherein the electrical parameter being below a predetermined threshold indicates that the single patient procedure time has elapsed.

4. The power assembly of claim 3, comprising a transistor coupled to the power source, the processor, and the resistor-capacitor circuit, wherein the processor is configured to control the transistor as a switch, and wherein the processor closes the transistor to charge the resistor-capacitor circuit when the electrical parameter is below the predetermined threshold.

5. The power assembly of claim 1, wherein the use indicator comprises:

a rechargeable clock battery; and
a clock in signal communication with the rechargeable clock battery and the processor, wherein the rechargeable clock battery comprises a maximum voltage sufficient to run the clock for at least the single patient procedure time, and wherein the processor modifies the usage cycle count when the clock indicates that a time period corresponding to the single patient procedure time has elapsed.

6. The power assembly of claim 5, comprising a transistor coupled to the power source, the processor, and the rechargeable clock battery, wherein the processor is configured to control the transistor as a switch, and wherein the processor closes the transistor to charge the rechargeable clock battery when the single patient procedure time has elapsed.

7. The power assembly of claim 2, wherein the use indicator is configured to detect a recharging cycle of the power assembly.

8. The power assembly of claim 1, wherein the processor is configured to increment the usage cycle count when the use indicator detects a use cycle of the power assembly.

9. The power assembly of claim 1, wherein a use cycle of the power assembly comprise environmental conditions.

10. The power assembly of claim 9, wherein the use indicator comprises an accelerometer, and wherein the processor is configured to modify the usage cycle count when the accelerometer indicates an acceleration above a predetermined threshold.

11. The power assembly of claim 10, wherein the use indicator comprises a chemical sensor, and wherein the processor is configured to modify the usage cycle count when the chemical sensor is configured to detect one or more predetermined chemicals.

12. The power assembly of claim 1, wherein the usage cycle circuit comprises a counter configured to maintain the usage cycle count.

13. The power assembly of claim 12, wherein the counter comprises a memory module in signal communication with the processor.

14. The power assembly of claim 12, wherein the counter comprises a resistor pack in signal communication with the processor, wherein the processor is configured to disable one or more resistors of the resistor pack when the use indicator is configured to detect the use cycle of the power assembly.

15. The power assembly of claim 1, comprising a communications module configured to transmit the usage cycle count a remote system.

16. The power assembly of claim 15, wherein the com-

munications module is configured to receive one or more instructions from the remote system.

Patentansprüche

1. Antriebsanordnung (2400), die Folgendes umfasst:

   ein Gehäuse, das konfiguriert ist, mit einem chirurgischen Instrument zu koppeln, wobei das Gehäuse wenigstens zwei elektrische Kontakte aufweist;
   eine Leistungsquelle (2414), die mit den wenigstens zwei elektrischen Kontakten gekoppelt sind, wobei die Leistungsquelle konfiguriert ist, für das chirurgische Instrument Leistung bereitzustellen;
   eine Nutzungszyklusschaltung (2402), die konfiguriert ist, einen Nutzungszyklus der Antriebsanordnung zu überwachen und einen Nutzungszykluszählstand zu pflegen, wobei die Nutzungszyklusschaltung Folgendes umfasst:

   einen Prozessor (2404), der konfiguriert ist, den Nutzungszykluszählstand zu pflegen;
   einen Nutzungsindikator (2406) in Signalkommunikation mit dem Prozessor, wobei der Nutzungsindikator konfiguriert ist, einen Nutzungszyklus der Antriebsanordnung zu detektieren, und wobei der Prozessor konfiguriert ist, den Nutzungszykluszählstand zu modifizieren, wenn der Nutzungsindikator einen Nutzungszyklus detektiert; und
   wobei die Nutzungszyklusschaltung konfiguriert ist, den Betrieb der Antriebsanordnung zu sperren, wenn der Nutzungszykluszählstand gleich einer vorgegebenen Nutzungsgrenze ist.

2. Antriebsanordnung nach Anspruch 1, wobei der Nutzungsindikator eine Zeitvorgabeschaltung enthält, die konfiguriert ist, eine Behandlungszeit eines einzelnen Patienten zu überwachen.

3. Antriebsanordnung nach Anspruch 1, wobei der Nutzungsindikator eine Widerstands-Kondensator-Schaltung mit einer Zeitkonstante, die der Behandlungszeit eines einzelnen Patienten entspricht, enthält und wobei der Prozessor konfiguriert ist, einen elektrischen Parameter der Widerstands-Kondensator-Schaltung zu detektieren, und wobei der elektrische Parameter, der unter einem vorgegebenen Schwellenwert liegt, angibt, dass die Behandlungszeit eines einzelnen Patienten verstrichen ist.

4. Antriebsanordnung nach Anspruch 3, die einen Transistor enthält, der mit der Leistungsquelle, dem Prozessor und der Widerstands-Kondensator-Schaltung gekoppelt ist, wobei der Prozessor konfiguriert ist, den Transistor als Schalter zu steuern, und wobei der Prozessor den Transistor sperrt, um die Widerstands-Kondensator-Schaltung zu laden, wenn der elektrische Parameter unter dem vorgegebenen Schwellenwert liegt.

5. Antriebsanordnung nach Anspruch 1, wobei der Nutzungsindikator Folgendes umfasst:

   eine wiederaufladbare Taktgeberbatterie; und
   einen Taktgeber in Signalkommunikation mit der wiederaufladbaren Taktgeberbatterie und mit dem Prozessor, wobei die wiederaufladbare Taktgeberbatterie eine maximale Spannung besitzt, die ausreicht, um den Taktgeber wenigstens für die Behandlungszeit eines einzelnen Patienten zu betreiben, und wobei der Prozessor den Nutzungszykluszählstand modifiziert, wenn der Taktgeber anzeigt, dass eine Zeitdauer, die der Behandlungszeit eines einzelnen Patienten entspricht, verstrichen ist.

6. Antriebsanordnung nach Anspruch 5, die einen Transistor enthält, der mit der Leistungsquelle, dem Prozessor und der wiederaufladbaren Taktgeberbatterie gekoppelt ist, wobei der Prozessor konfiguriert ist, den Transistor als Schalter zu steuern, und wobei der Prozessor den Transistor sperrt, um die wiederaufladbare Taktgeberbatterie zu laden, wenn die Behandlungszeit eines einzelnen Patienten verstrichen ist.

7. Antriebsanordnung nach Anspruch 2, wobei der Nutzungsindikator konfiguriert ist, einen Wiederaufladezyklus der Antriebsanordnung zu detektieren.

8. Antriebsanordnung nach Anspruch 1, wobei der Prozessor konfiguriert ist, den Nutzungszykluszählstand zu inkrementieren, wenn der Nutzungsindikator einen Nutzungszyklus der Antriebsanordnung detektiert.

9. Antriebsanordnung nach Anspruch 1, wobei ein Nutzungszyklus der Antriebsanordnung Umgebungsbedingungen umfasst.

10. Antriebsanordnung nach Anspruch 9, wobei der Nutzungsindikator einen Beschleunigungsmesser enthält und wobei der Prozessor konfiguriert ist, den Nutzungszykluszählstand zu modifizieren, wenn der Beschleunigungsmesser eine Beschleunigung oberhalb eines vorgegebenen Schwellenwerts angibt.

11. Antriebsanordnung nach Anspruch 10, wobei der Nutzungsindikator einen chemischen Sensor enthält und wobei der Prozessor konfiguriert ist, den Nut-

zungszykluszählstand zu modifizieren, wenn der chemische Sensor konfiguriert ist, eine oder mehrere vorgegebene Chemikalien zu detektieren.

12. Antriebsanordnung nach Anspruch 1, wobei die Nutzungszyklusschaltung einen Zähler enthält, der konfiguriert ist, den Nutzungszykluszählstand zu pflegen.

13. Antriebsanordnung nach Anspruch 12, wobei der Zähler ein Speichermodul in Signalkommunikation mit dem Prozessor enthält.

14. Antriebsanordnung nach Anspruch 12, wobei der Zähler eine Widerstandsbaugruppe in Signalkommunikation mit dem Prozessor enthält, wobei der Prozessor konfiguriert ist, einen oder mehrere Widerstände der Widerstandsbaugruppe zu sperren, wenn der Nutzungsindikator konfiguriert ist, den Nutzungszyklus der Antriebsanordnung zu detektieren.

15. Antriebsanordnung nach Anspruch 1, die ein Kommunikationsmodul enthält, das konfiguriert ist, den Nutzungszykluszählstand an ein entferntes System zu übertragen.

16. Antriebsanordnung nach Anspruch 15, wobei das Kommunikationsmodul konfiguriert ist, einen oder mehrere Befehle von dem entfernten System zu empfangen.

Revendications

1. Ensemble d'alimentation (2400), comprenant :

un boîtier configuré pour se coupler à un instrument chirurgical, le boîtier comprenant au moins deux contacts électriques ;
une source d'alimentation (2414) couplée aux au moins deux contacts électriques, la source d'alimentation étant configurée pour alimenter l'instrument chirurgical ;
un circuit de cycle d'utilisation (2402) configuré pour surveiller un cycle d'utilisation de l'ensemble d'alimentation et conserver un décompte de cycles d'utilisation, le circuit de cycle d'utilisation comprenant :

un processeur (2404) configuré pour conserver le décompte de cycles d'utilisation ;
un indicateur d'utilisation (2406) en communication de signaux avec le processeur, l'indicateur d'utilisation étant configuré pour détecter un cycle d'utilisation de l'ensemble d'alimentation, et le processeur étant configuré pour modifier le décompte de cycles d'utilisation quand l'indicateur d'utilisation détecte un cycle d'utilisation ; et
dans lequel le circuit de cycle d'utilisation est configuré pour désactiver le fonctionnement de l'ensemble d'alimentation quand le décompte de cycles d'utilisation est égal à une limite d'utilisation prédéterminée.

2. Ensemble d'alimentation de la revendication 1, dans lequel l'indicateur d'utilisation comprend un circuit de minutage configuré pour surveiller un temps de procédure unique sur patient.

3. Ensemble d'alimentation de la revendication 1, dans lequel l'indicateur d'utilisation comprend un circuit résistance-condensateur ayant une constante de temps correspondant au temps de procédure unique sur patient, et dans lequel le processeur est configuré pour détecter un paramètre électrique du circuit résistance-condensateur, et dans lequel le paramètre électrique, lorsqu'il est inférieur à un seuil prédéterminé, indique que le temps de procédure unique sur patient s'est écoulé.

4. Ensemble d'alimentation de la revendication 3, comprenant un transistor couplé à la source d'alimentation, au processeur et au circuit résistance-condensateur, le processeur étant configuré pour contrôler le transistor comme un commutateur, et le processeur fermant le transistor pour charger le circuit résistance-condensateur quand le paramètre électrique est inférieur au seuil prédéterminé.

5. Ensemble d'alimentation de la revendication 1, dans lequel l'indicateur d'utilisation comprend :

une batterie rechargeable d'horloge ; et
une horloge en communication de signaux avec la batterie rechargeable d'horloge et le processeur, la batterie rechargeable d'horloge comprenant une tension maximale suffisante pour faire fonctionner l'horloge au moins pendant le temps de procédure unique sur patient, et le processeur modifiant le décompte de cycles d'utilisation quand l'horloge indique qu'un laps de temps correspondant au temps de procédure unique sur patient s'est écoulé.

6. Ensemble d'alimentation de la revendication 5, comprenant un transistor couplé à la source d'alimentation, au processeur et à la batterie rechargeable d'horloge, le processeur étant configuré pour contrôler le transistor comme un commutateur, et le processeur fermant le transistor pour charger la batterie rechargeable d'horloge quand le temps de procédure unique sur patient s'est écoulé.

7. Ensemble d'alimentation de la revendication 2, dans lequel l'indicateur d'utilisation est configuré pour dé-

tecter un cycle de recharge de l'ensemble d'alimentation.

8. Ensemble d'alimentation de la revendication 1, dans lequel le processeur est configuré pour incrémenter le décompte de cycles d'utilisation quand l'indicateur d'utilisation détecte un cycle d'utilisation de l'ensemble d'alimentation.

9. Ensemble d'alimentation de la revendication 1, un cycle d'utilisation de l'ensemble d'alimentation comprenant des conditions environnementales.

10. Ensemble d'alimentation de la revendication 9, dans lequel l'indicateur d'utilisation comprend un accéléromètre, et dans lequel le processeur est configuré pour modifier le décompte de cycles d'utilisation quand l'accéléromètre indique une accélération supérieure à un seuil prédéterminé.

11. Ensemble d'alimentation de la revendication 10, dans lequel l'indicateur d'utilisation comprend un capteur chimique, et dans lequel le processeur est configuré pour modifier le décompte de cycles d'utilisation quand le capteur chimique est configuré pour détecter une ou plusieurs substances chimiques prédéterminées.

12. Ensemble d'alimentation de la revendication 1, dans lequel le circuit de cycle d'utilisation comprend un compteur configuré pour conserver le décompte de cycles d'utilisation.

13. Ensemble d'alimentation de la revendication 12, dans lequel le compteur comprend un module de mémoire en communication de signaux avec le processeur.

14. Ensemble d'alimentation de la revendication 12, dans lequel le compteur comprend un bloc de résistances en communication de signaux avec le processeur, le processeur étant configuré pour désactiver une ou plusieurs résistances du bloc de résistances quand l'indicateur d'utilisation est configuré pour détecter le cycle d'utilisation de l'ensemble d'alimentation.

15. Ensemble d'alimentation de la revendication 1, comprenant un module de communication configuré pour transmettre le décompte de cycles d'utilisation à un système distant.

16. Ensemble d'alimentation de la revendication 15, dans lequel le module de communication est configuré pour recevoir une ou plusieurs instructions en provenance du système distant.

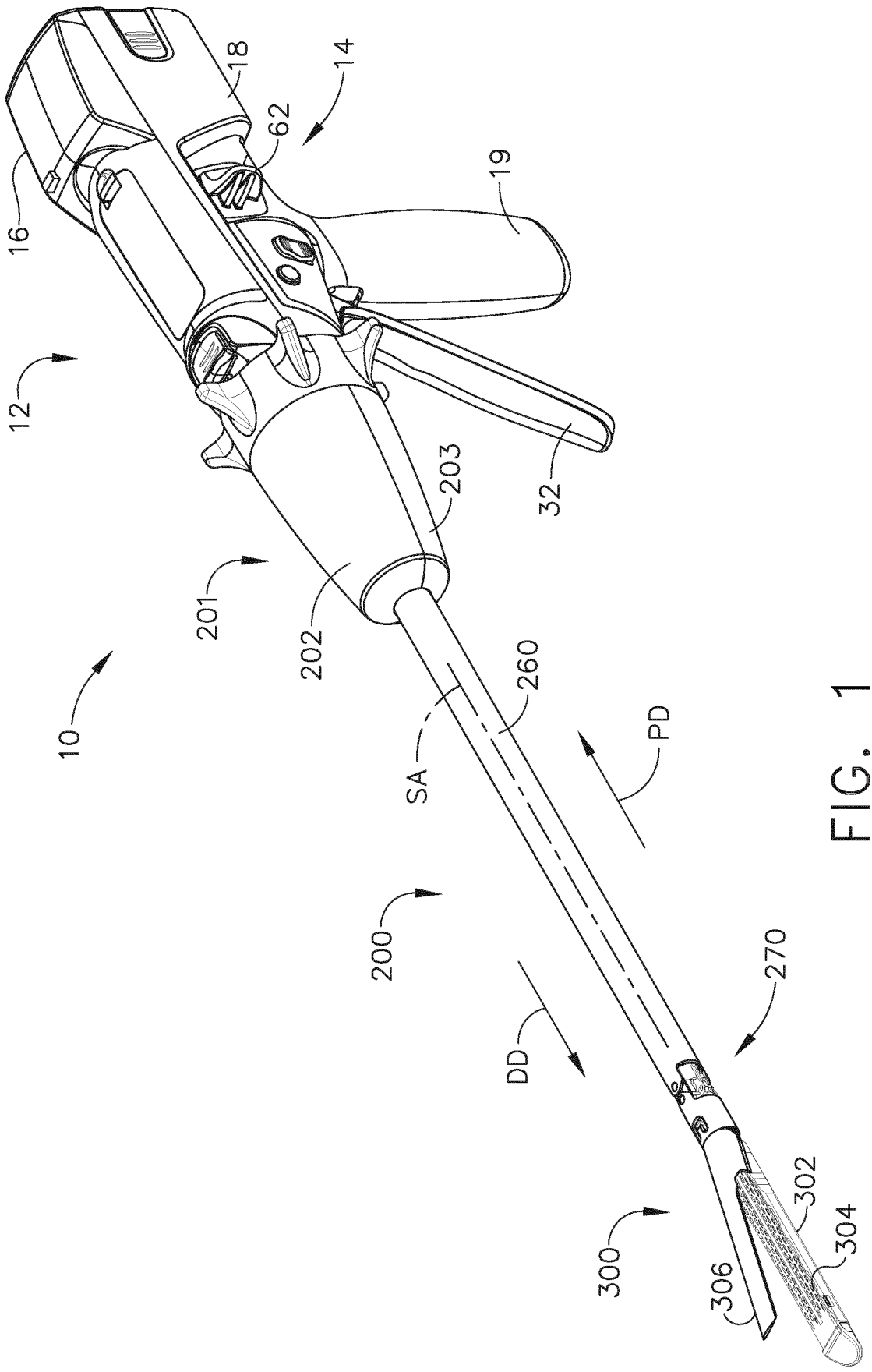
10
12
14
16
18
19
62
32
201
202
203
200
260
SA
PD
DD
270
300
302
304
306

FIG. 1

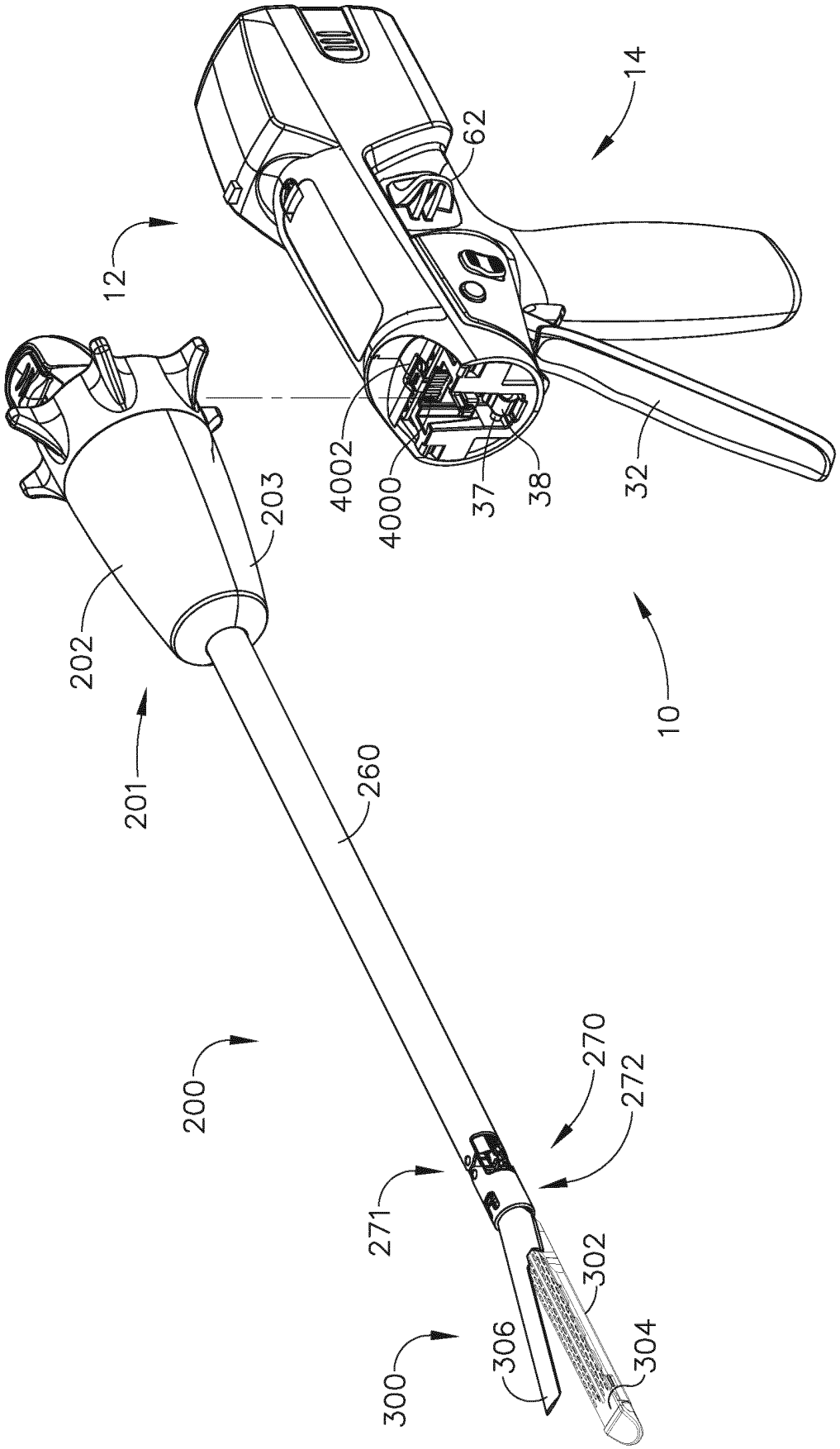
14
62
12
4002
4000
37
38
32
203
202
201
10
260
200
270
272
271
302
306
304
300

FIG. 2

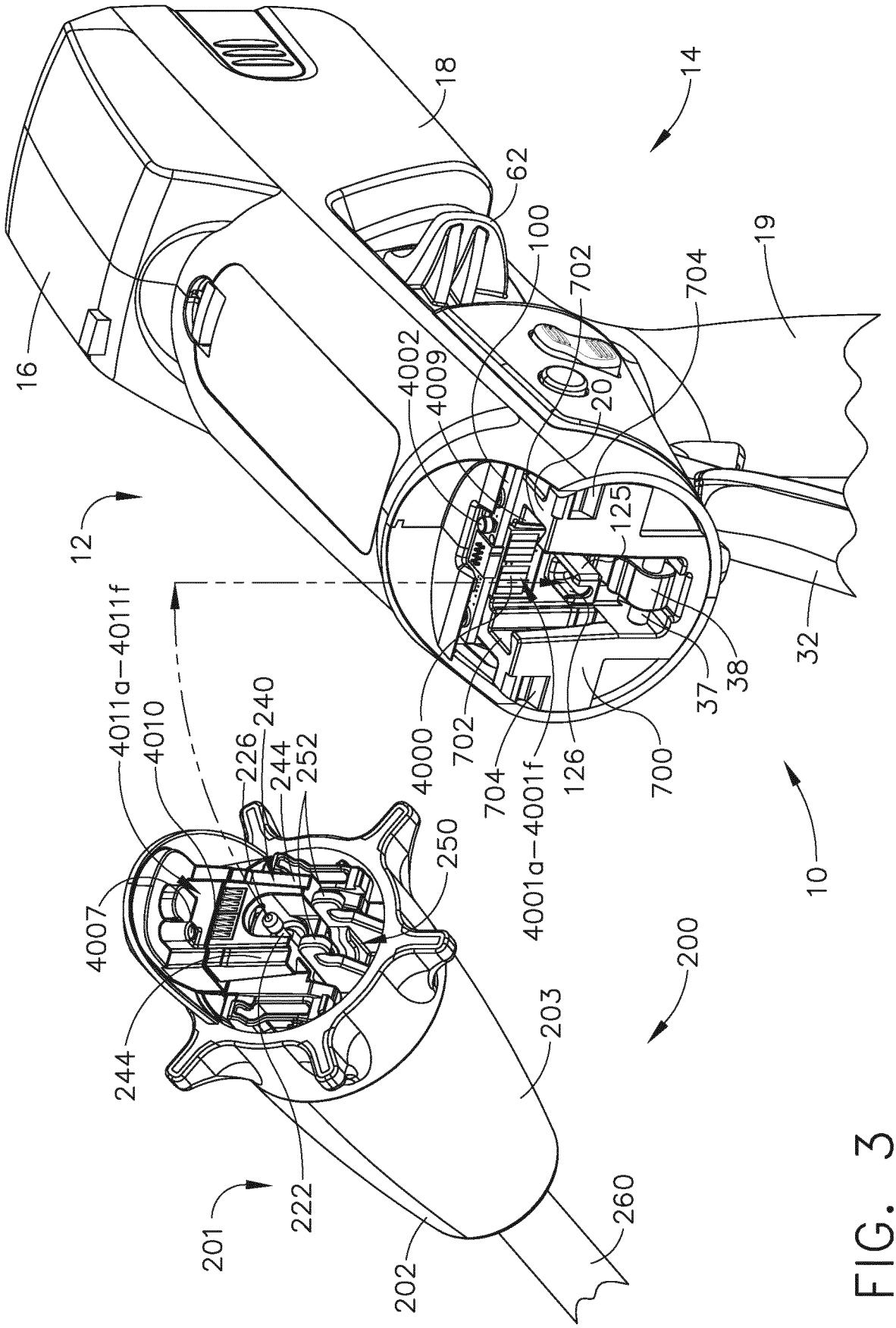
16
18
14
62
100
702
704
19
4002
4009
20
12
125
4011a–4011f
4010
240
226
244
252
4000
702
704
4001a–4001f
126
700
37
38
32
10
4007
250
200
244
203
222
201
202
260

FIG. 3

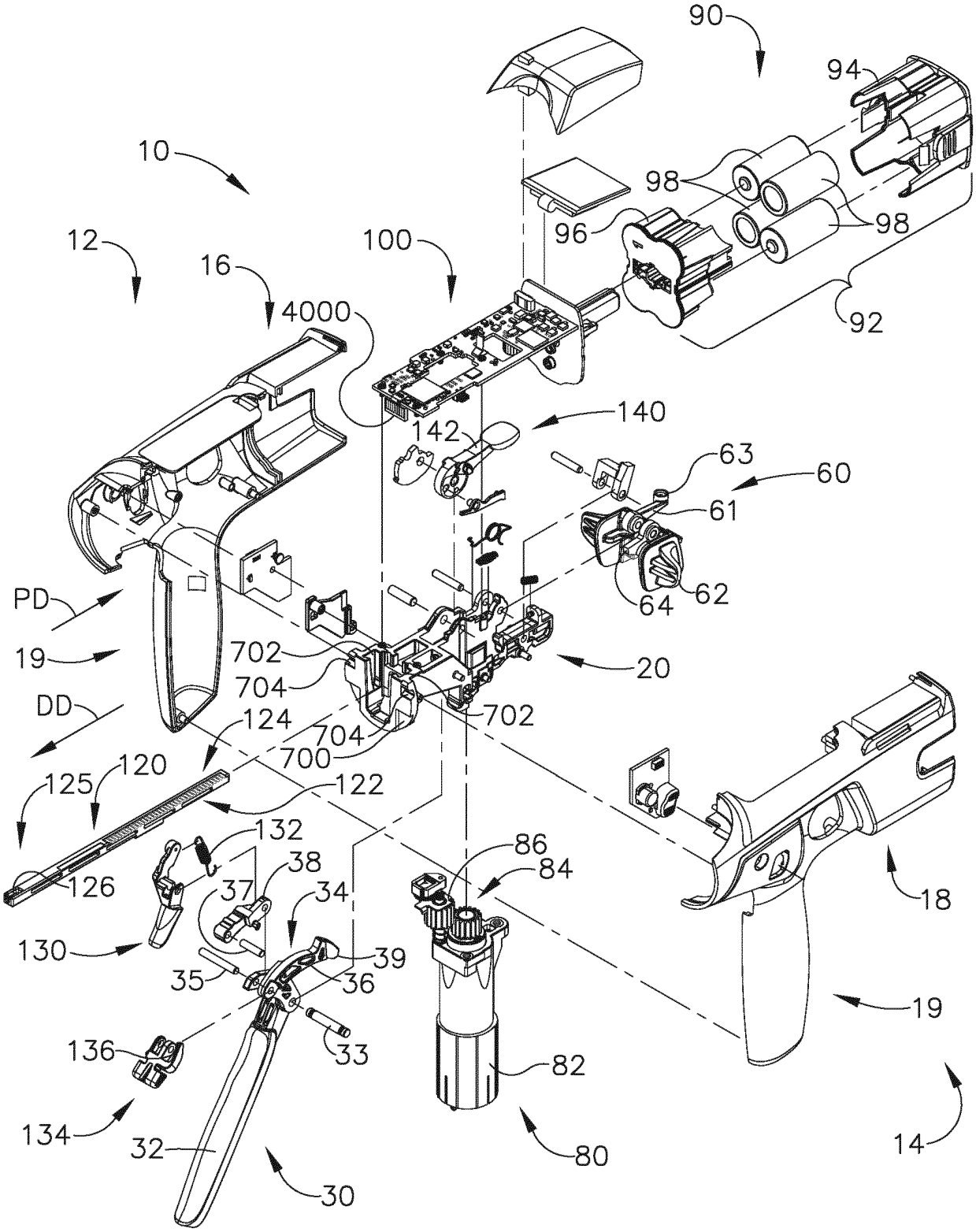
90
94
10
98
96
98
12
100
16
4000
92
140
142
63
60
61
PD
64
62
19
702
20
704
DD
124
702
704
700
120
125
122
132
86
84
38
126
37
34
18
130
39
35
36
19
136
33
82
134
32
80
14
30

FIG. 4

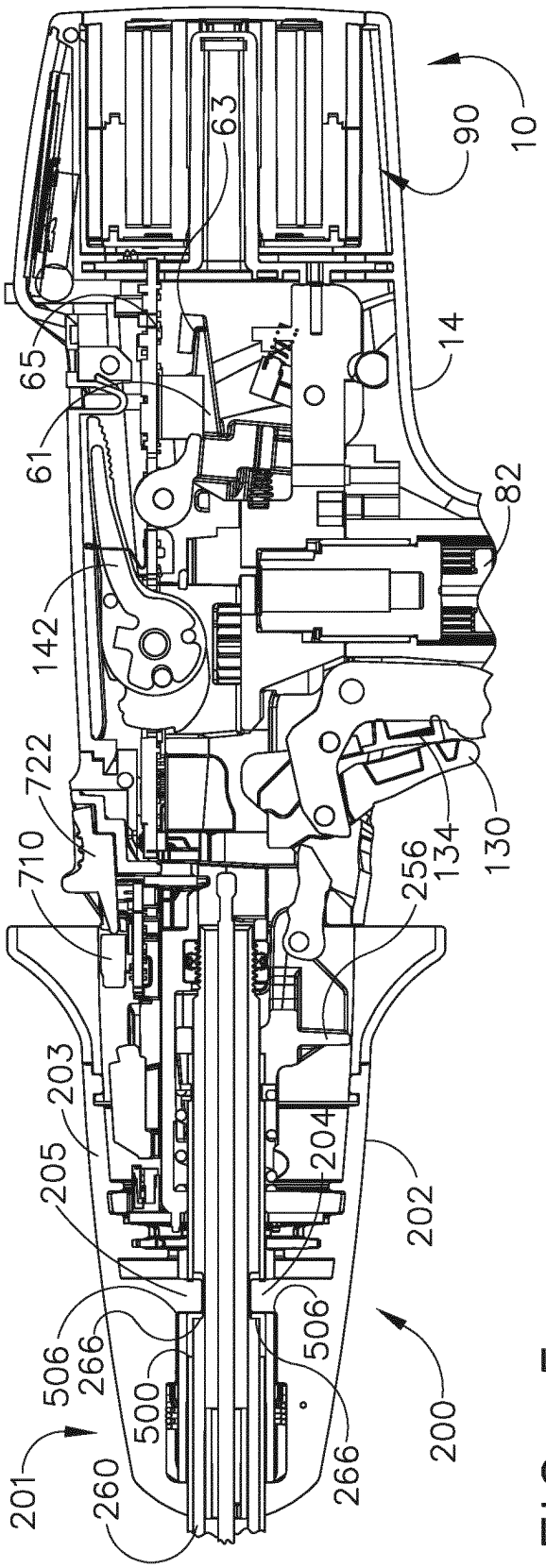
10
90
63
65
61
14
82
142
722
710
130
134
256
203
205
204
202
506
266
500
200
201
260

FIG. 5

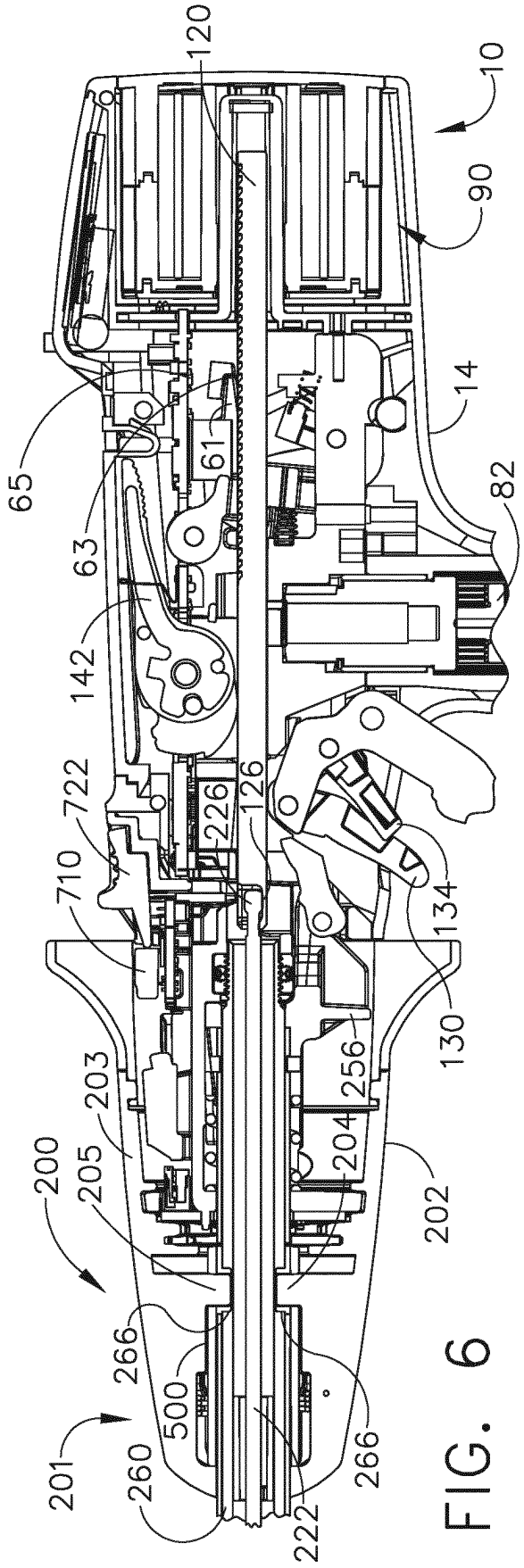
120
10
90
14
65
61
63
82
142
722
226
126
710
134
130
256
203
205
200
204
202
266
500
201
260
222

FIG. 6

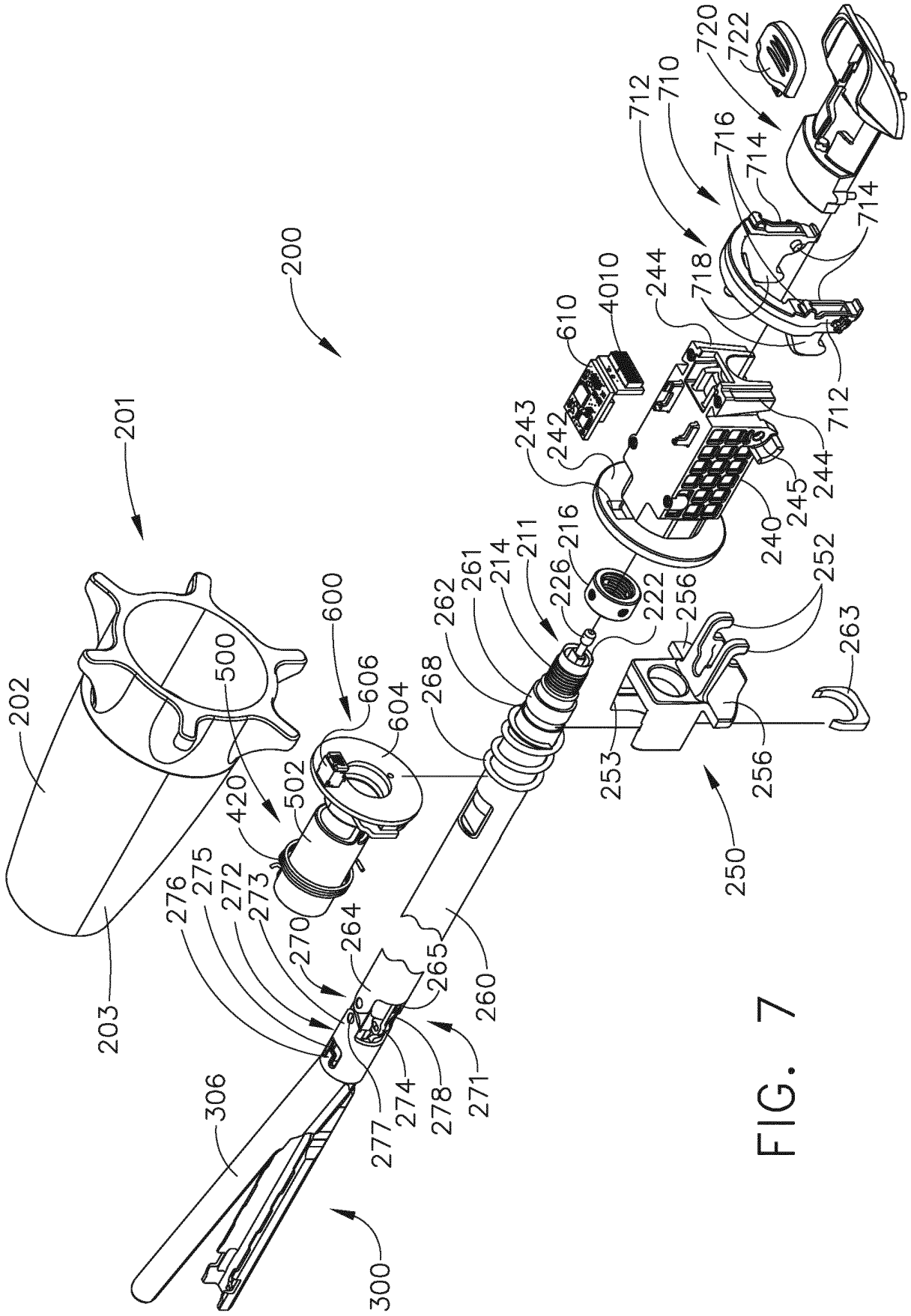
200
201
202
203
300
306
420
500
502
600
604
606
610
4010
240
242
243
244
245
250
252
253
256
260
261
262
263
264
265
268
270
271
272
273
274
275
276
277
278
211
214
216
222
226
710
712
714
716
718
720
722

FIG. 7

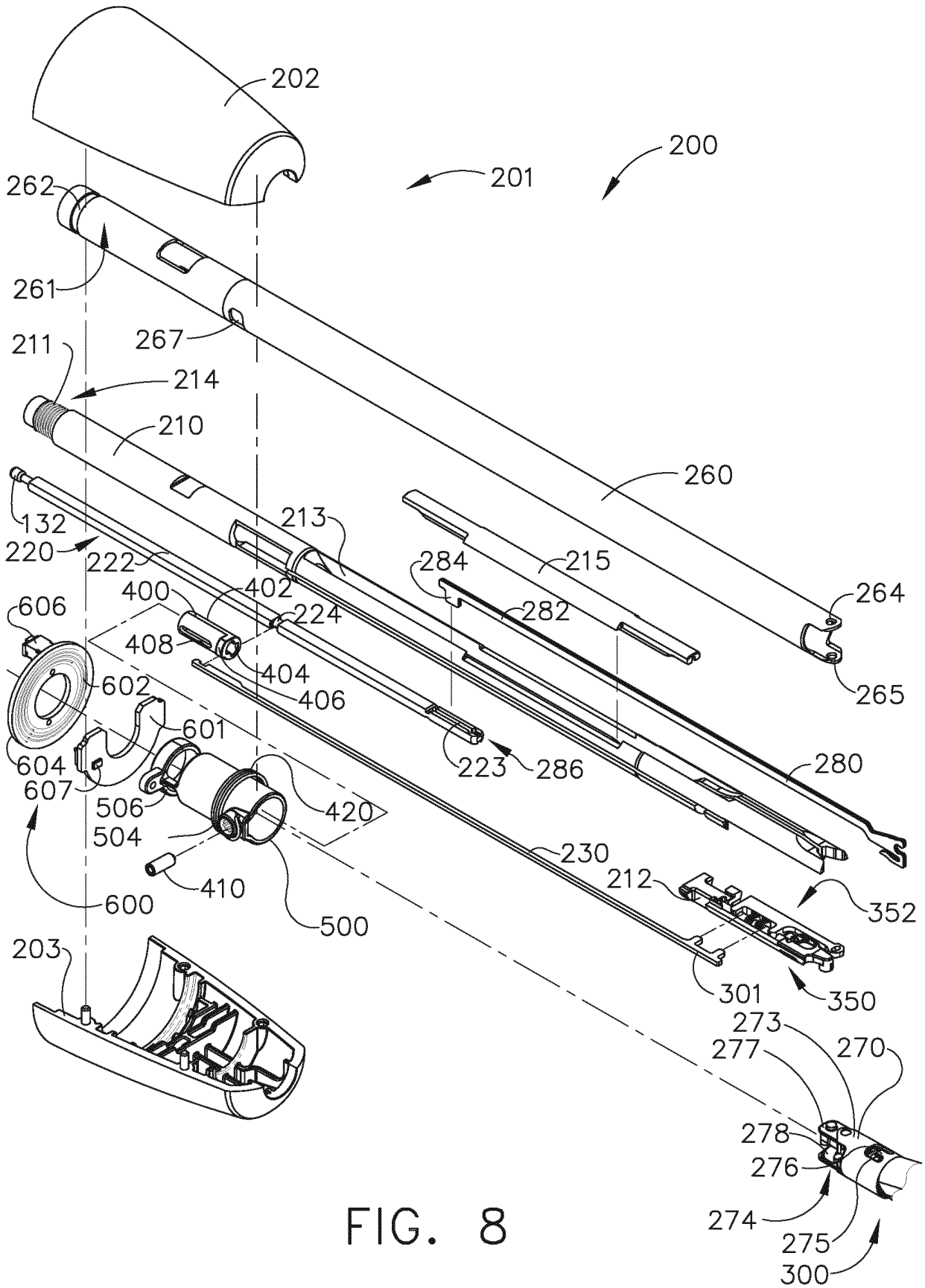
202
200
201
262
261
267
211
214
210
260
132
220
222
213
284
215
264
400
402
224
282
606
408
404
406
265
602
601
604
607
223
286
280
506
420
504
230
410
212
600
500
352
203
301
350
273
277
270
278
276
274
275
300

FIG. 8

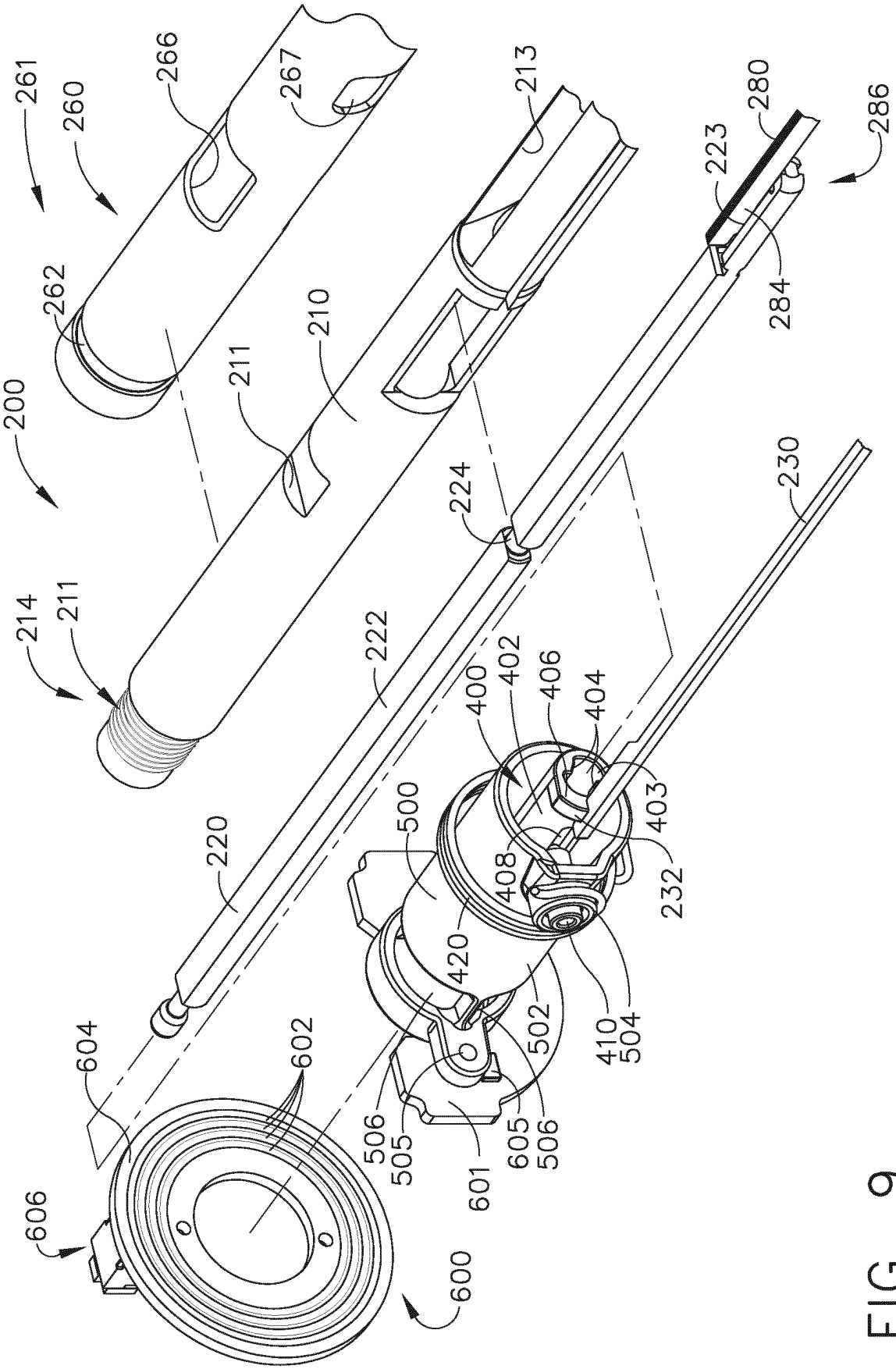
261
260
266
267
213
280
286
223
284
262
210
211
200
224
230
214
211
222
400
402
406
404
403
500
408
232
220
420
410
504
502
604
602
506
505
601
605
506
606
600

FIG. 9

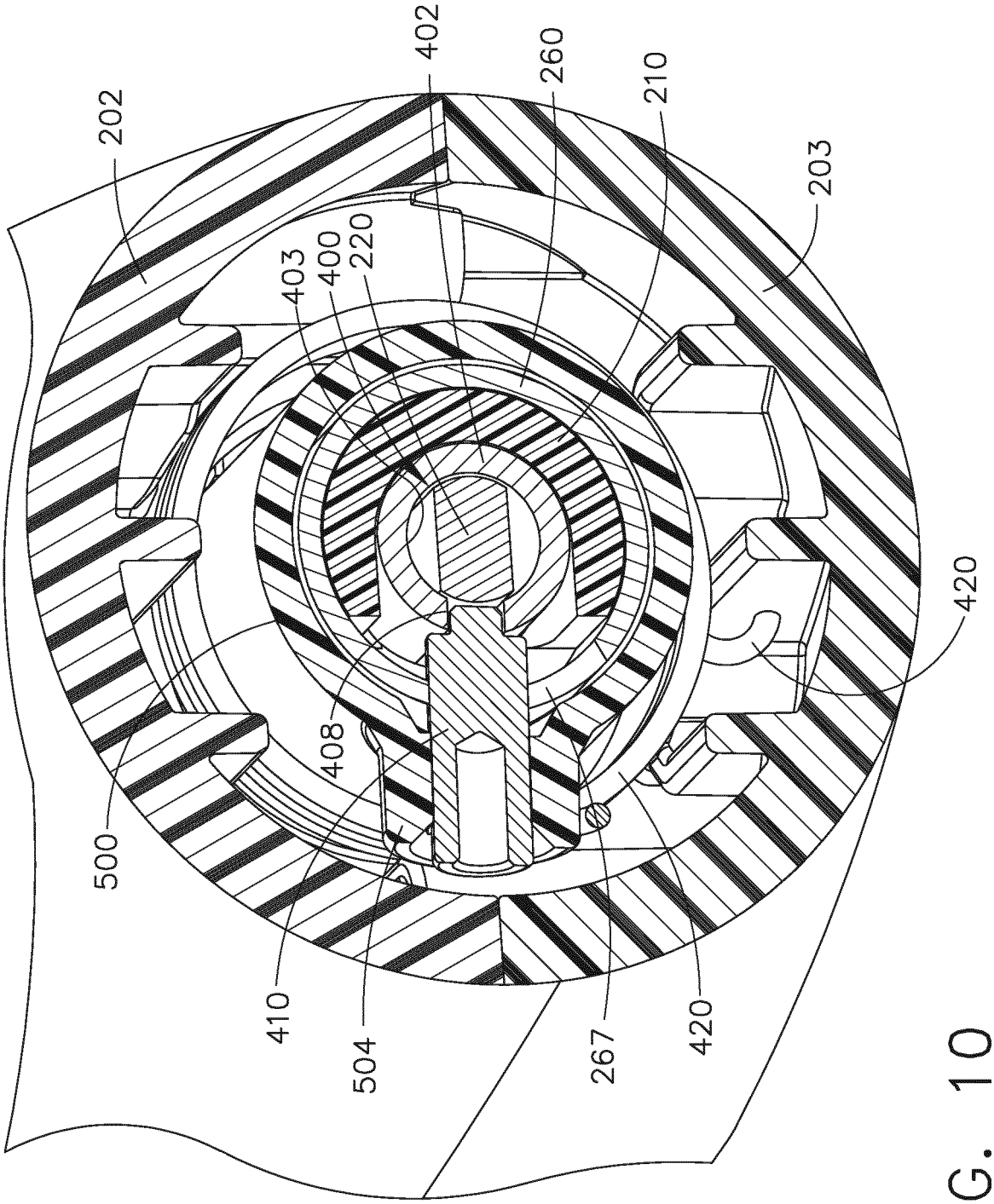

FIG. 10

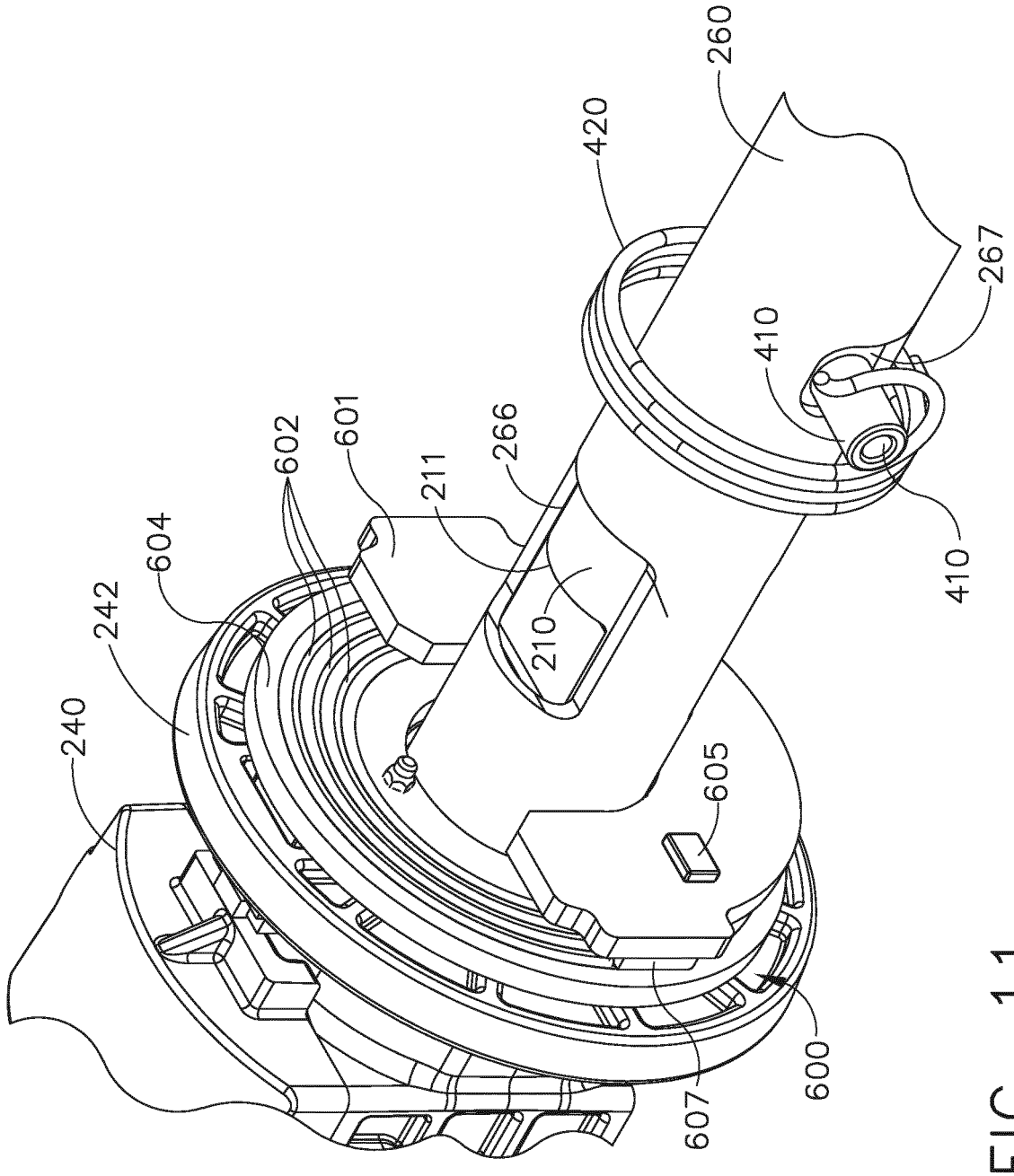

FIG. 11

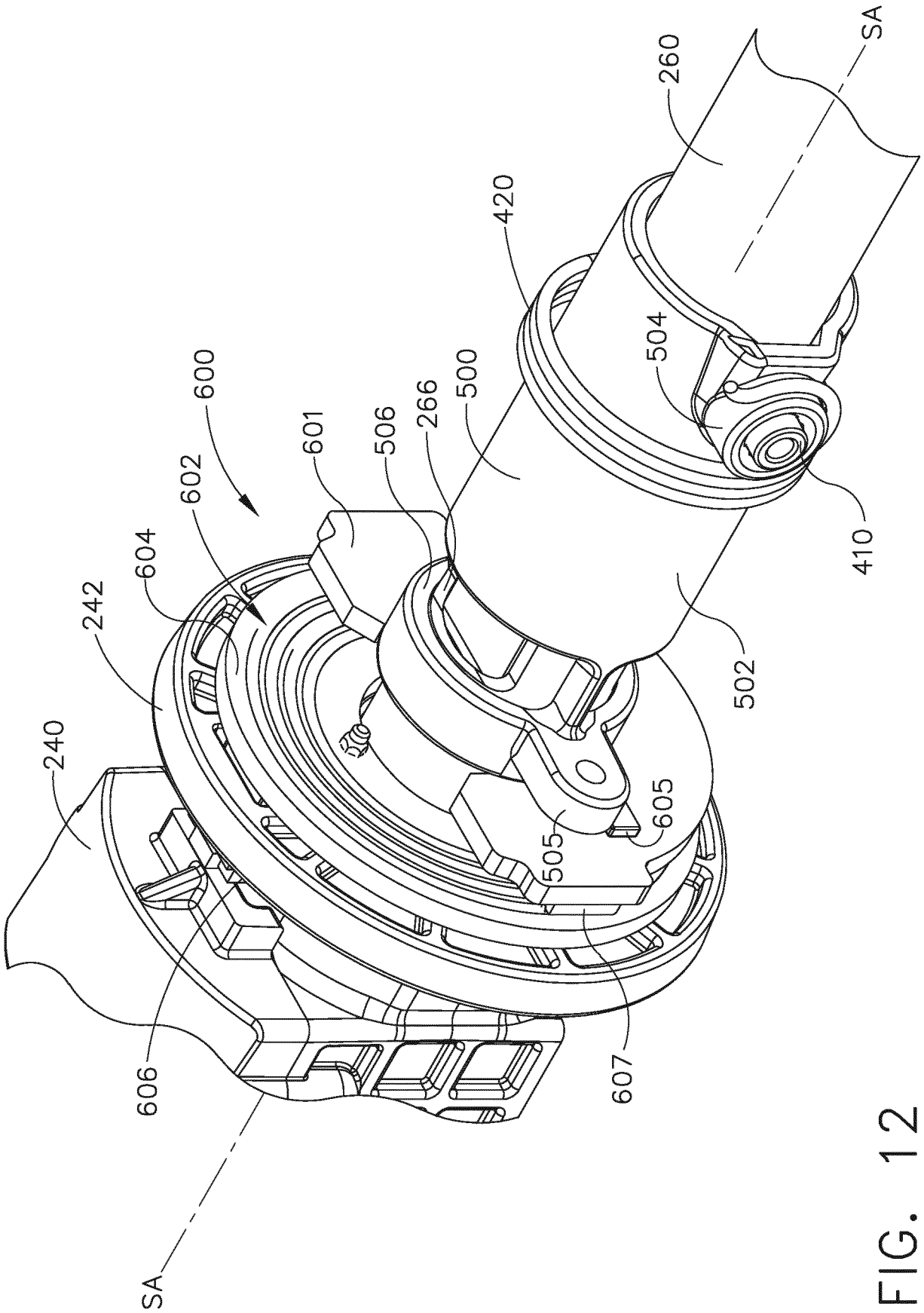
SA
260
420
504
500
266
506
601
600
602
604
242
240
410
502
605
505
607
606
SA

FIG. 12

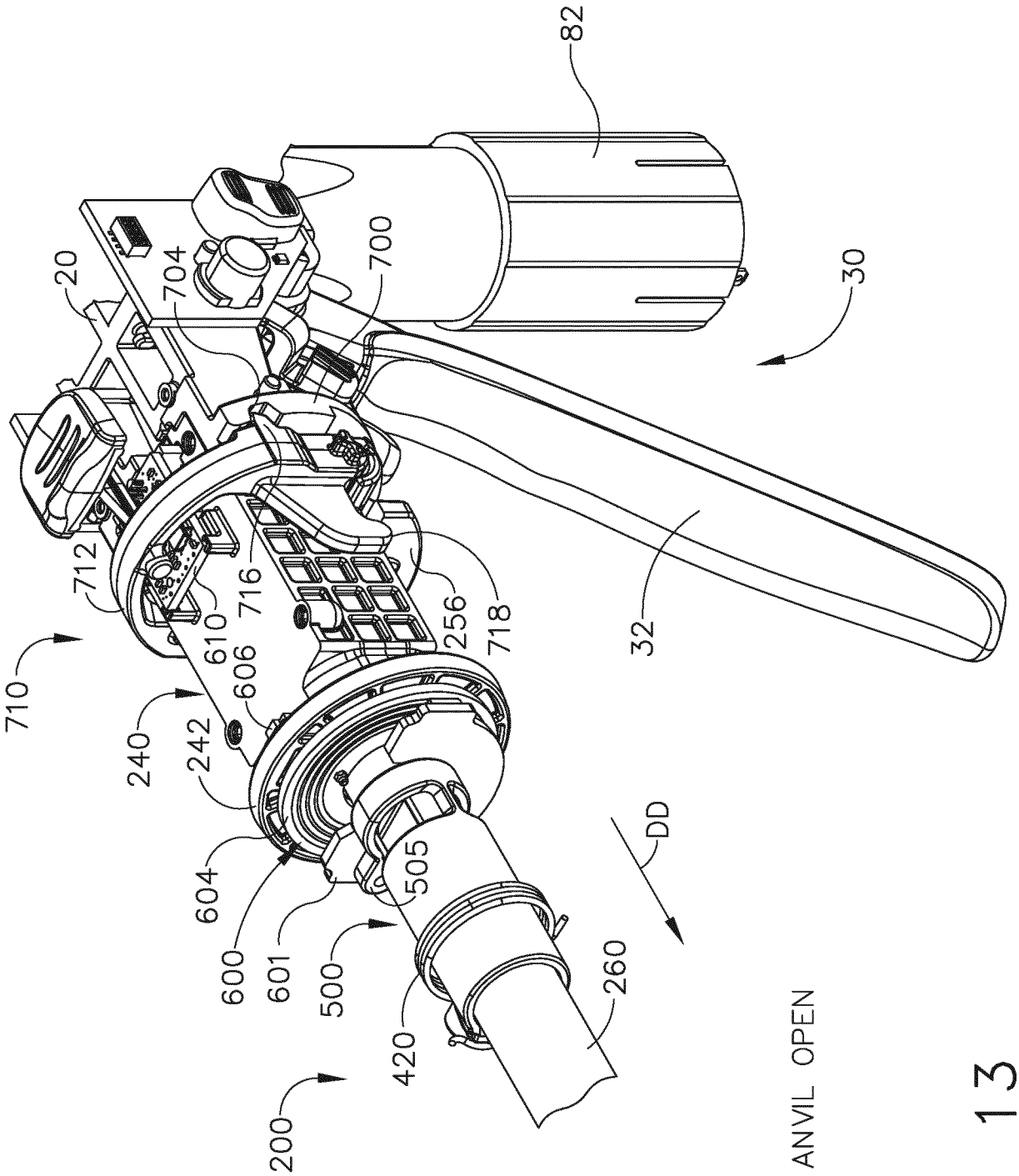
82
20
704
700
30
712
716
610
256
718
32
710
606
240
242
604
505
DD
600
601
500
260
420
200
ANVIL OPEN

FIG. 13

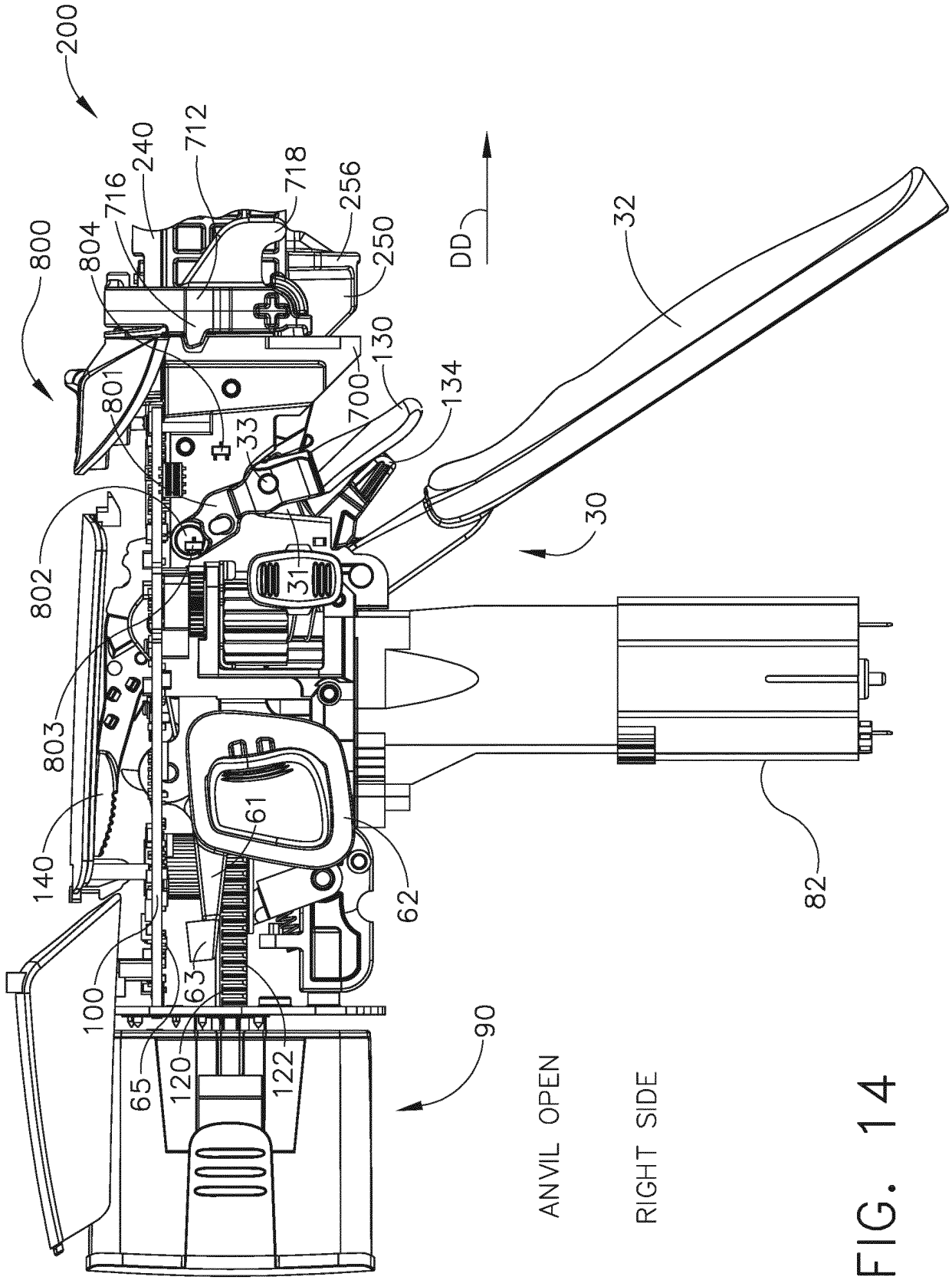
200
800
801
802
803
804
716
240
712
718
256
250
DD
32
130
700
134
33
31
30
140
61
62
82
100
63
65
120
122
90
ANVIL OPEN
RIGHT SIDE

FIG. 14

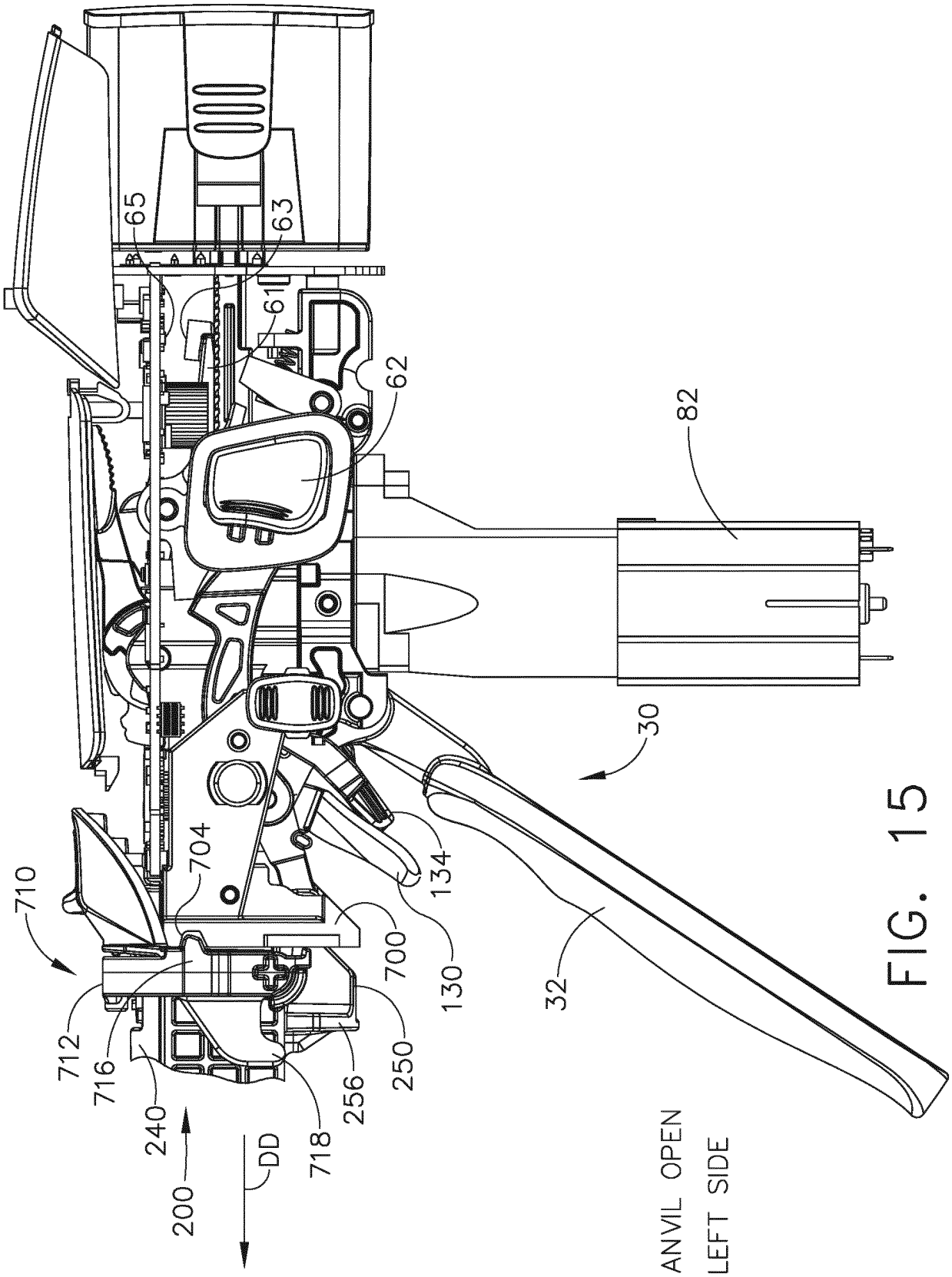
65
63
61
62
82
30
710
704
134
700
130
32
712
716
240
200
DD
718
256
250
ANVIL OPEN
LEFT SIDE

FIG. 15

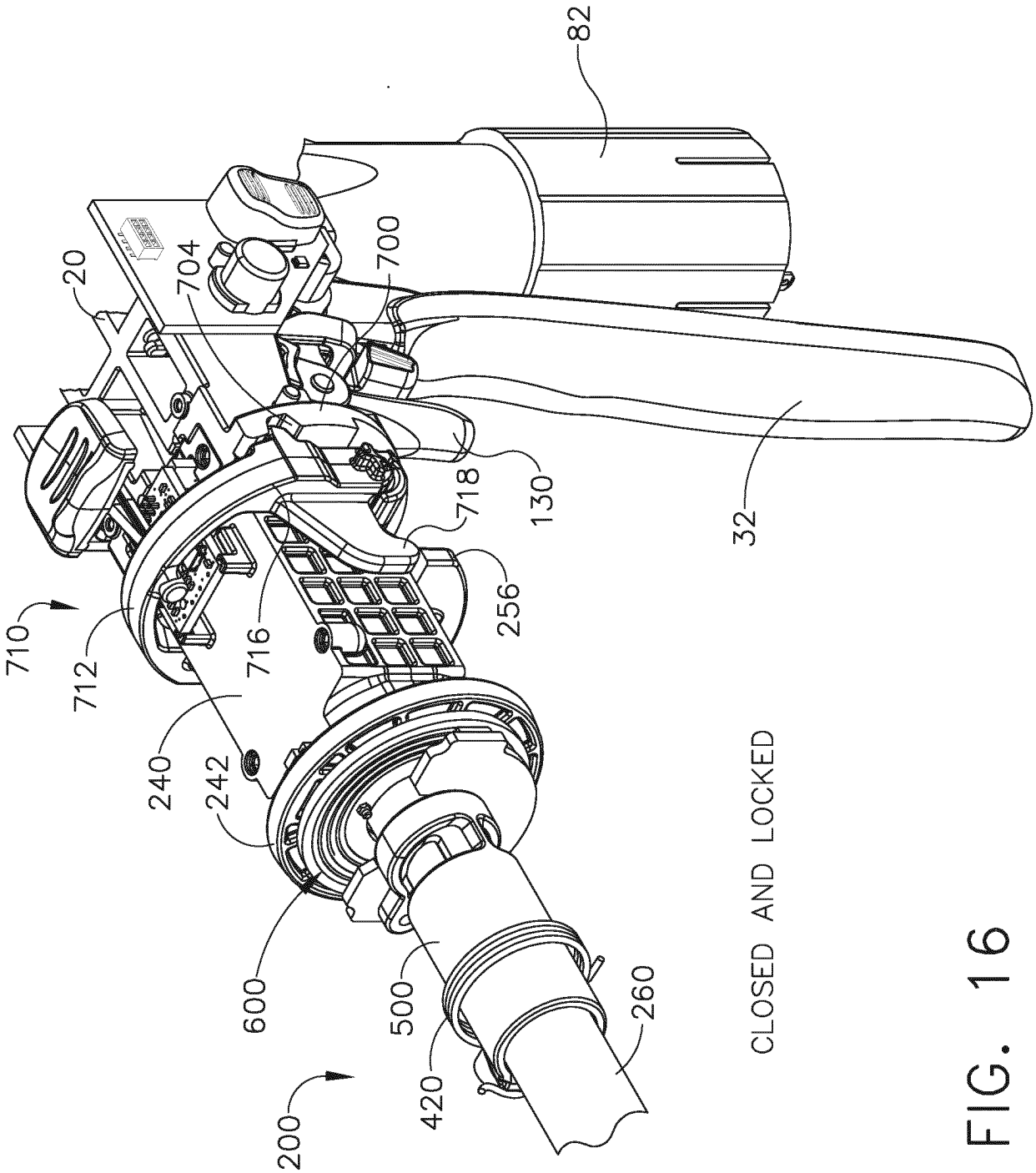
82
20
704
700
718
130
32
710
712
716
256
240
242
600
500
420
260
200
CLOSED AND LOCKED

FIG. 16

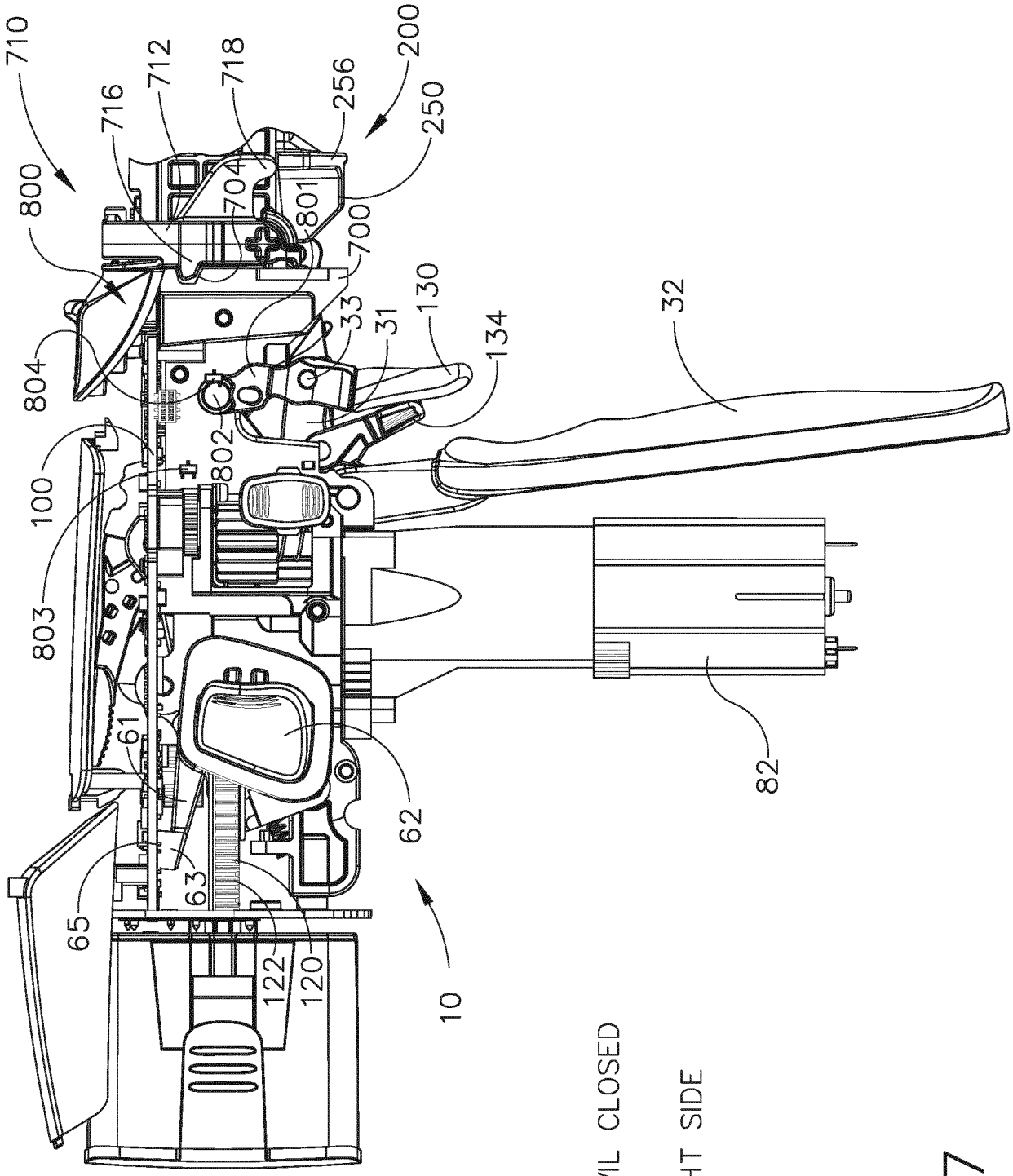

ANVIL CLOSED

RIGHT SIDE

FIG. 17

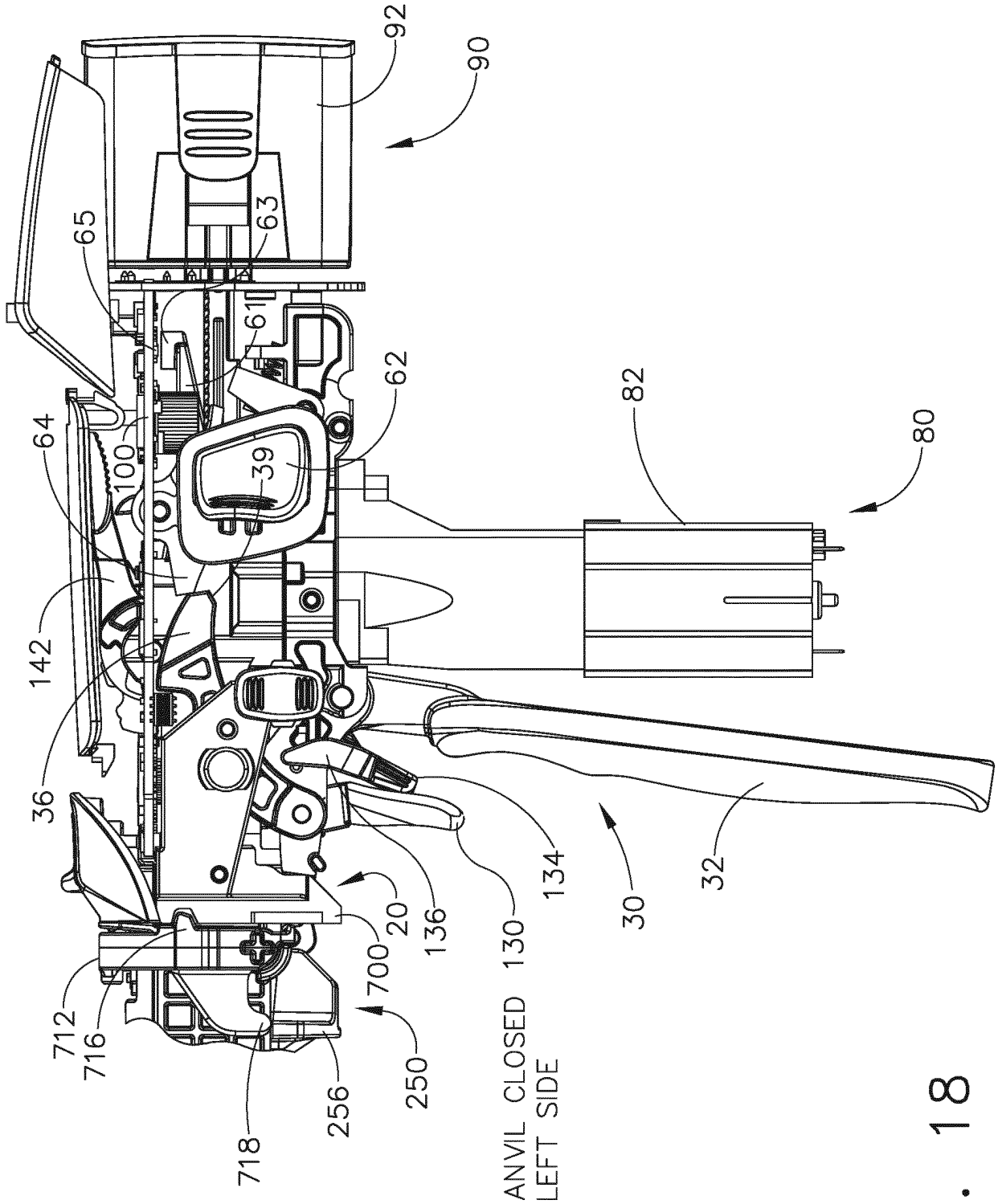
92
90
65
63
61
62
82
80
64
100
39
142
36
134
30
32
20
136
130
700
712
716
250
256
718
ANVIL CLOSED
LEFT SIDE

FIG. 18

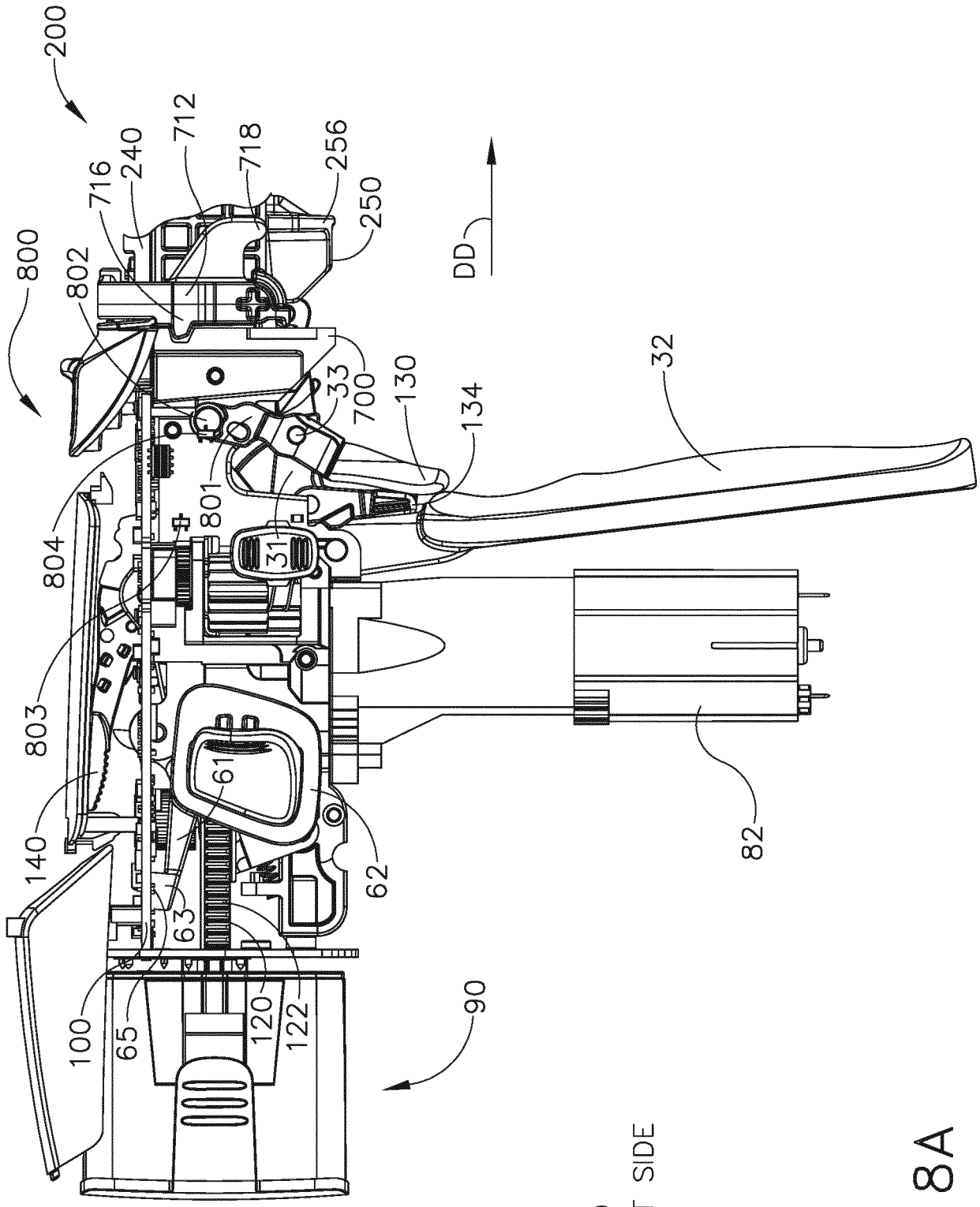

FIRED
RIGHT SIDE

FIG. 18A

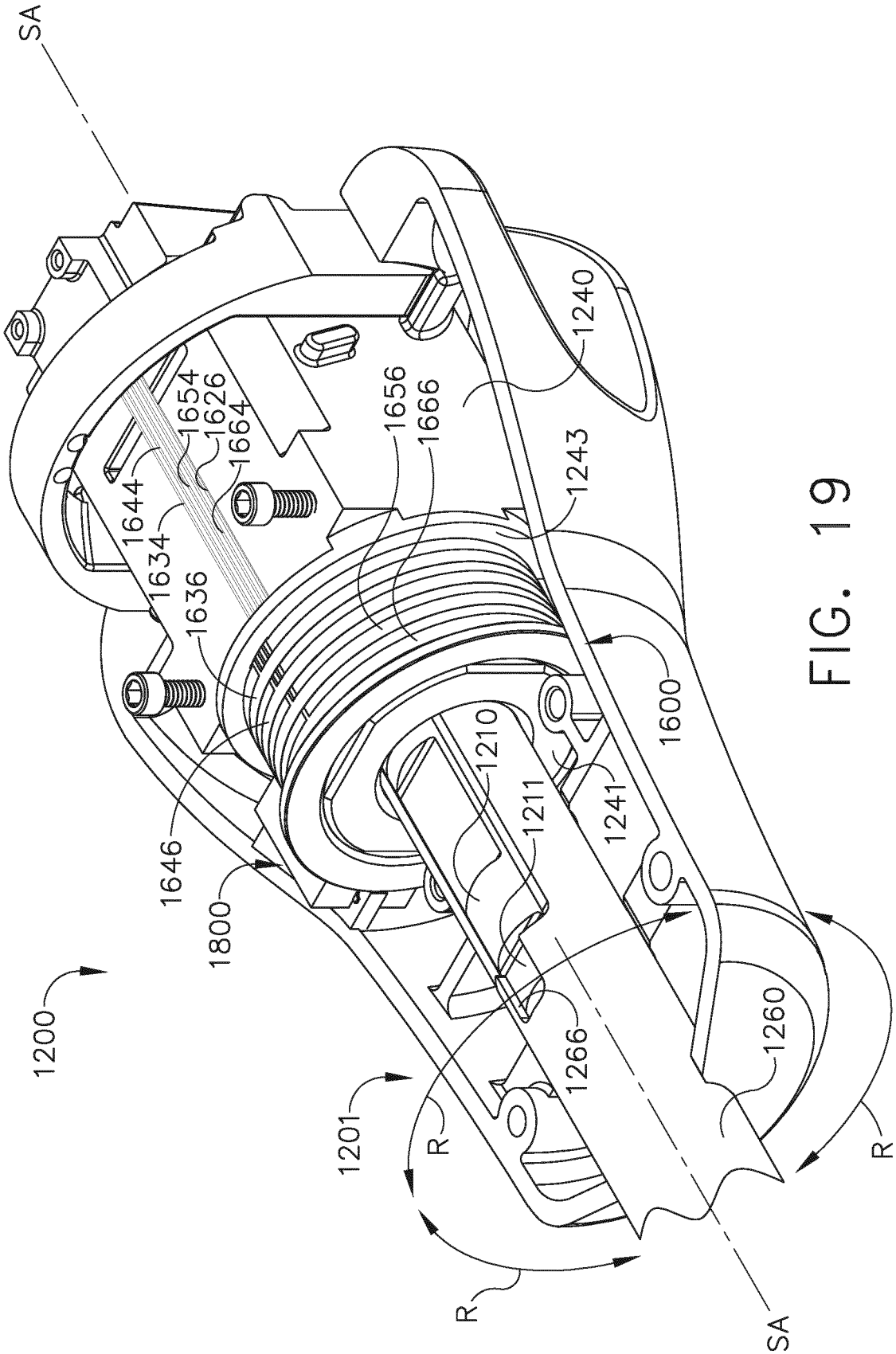
SA
1240
1654
1626
1664
1656
1666
1644
1243
1634
1636
1600
1210
1211
1241
1646
1800
1200
1266
1260
1201
R
R
R
SA

FIG. 19

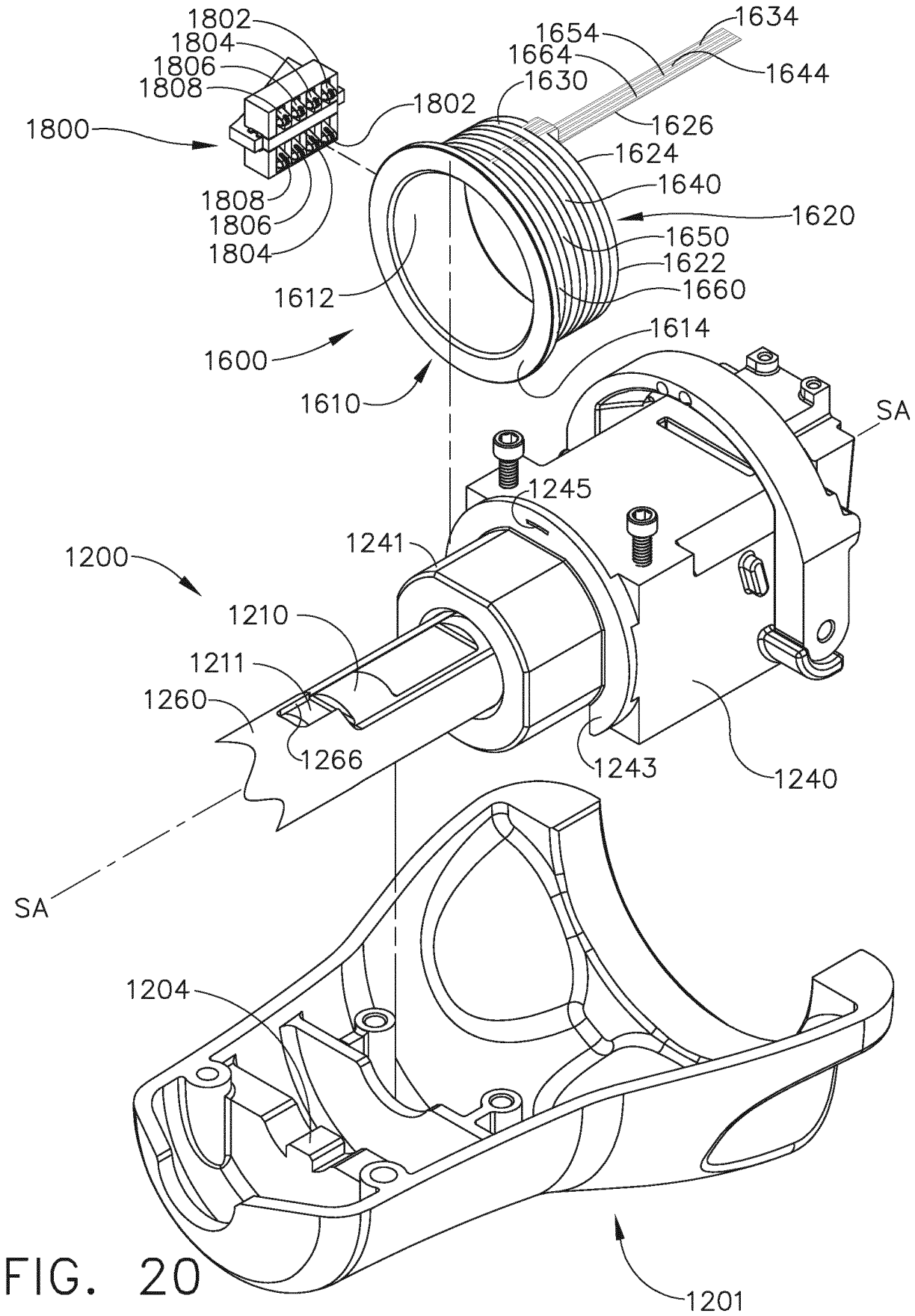
1802
1804
1806
1808
1800
1808
1806
1804
1802
1654
1664
1630
1634
1644
1626
1624
1640
1620
1650
1622
1660
1614
1612
1600
1610
SA
1245
1241
1200
1210
1211
1260
1266
1243
1240
SA
1204
1201

FIG. 20

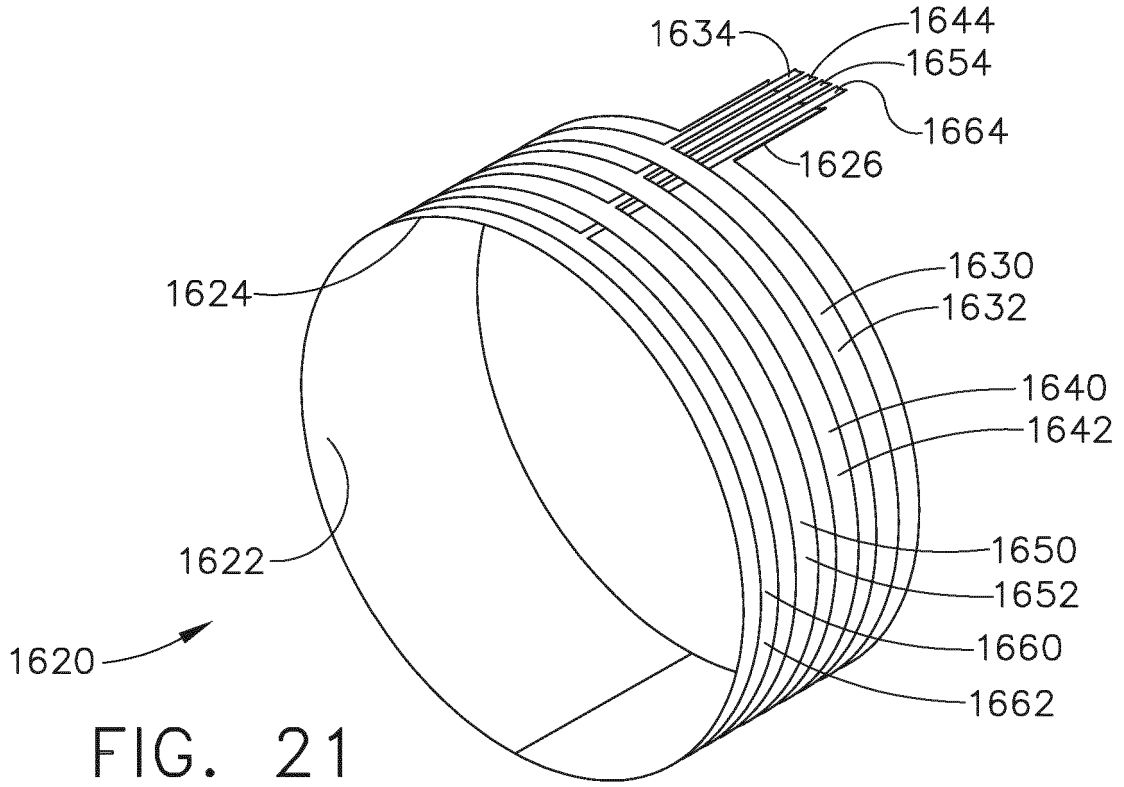
1634
1644
1654
1664
1626
1624
1630
1632
1640
1642
1622
1650
1652
1660
1662
1620

FIG. 21

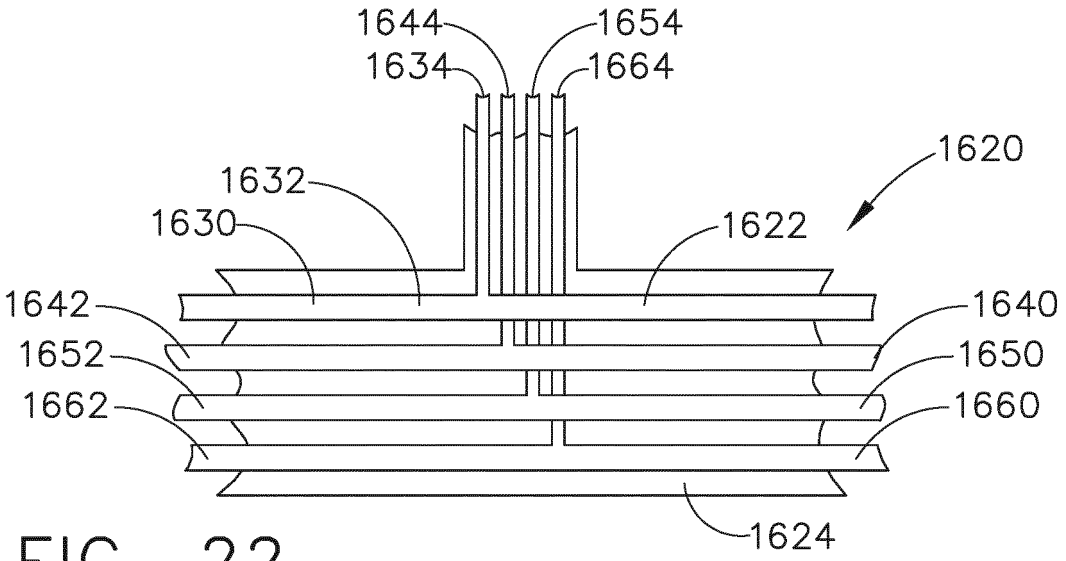
1644
1654
1634
1664
1620
1632
1630
1622
1642
1640
1652
1650
1662
1660
1624

FIG. 22

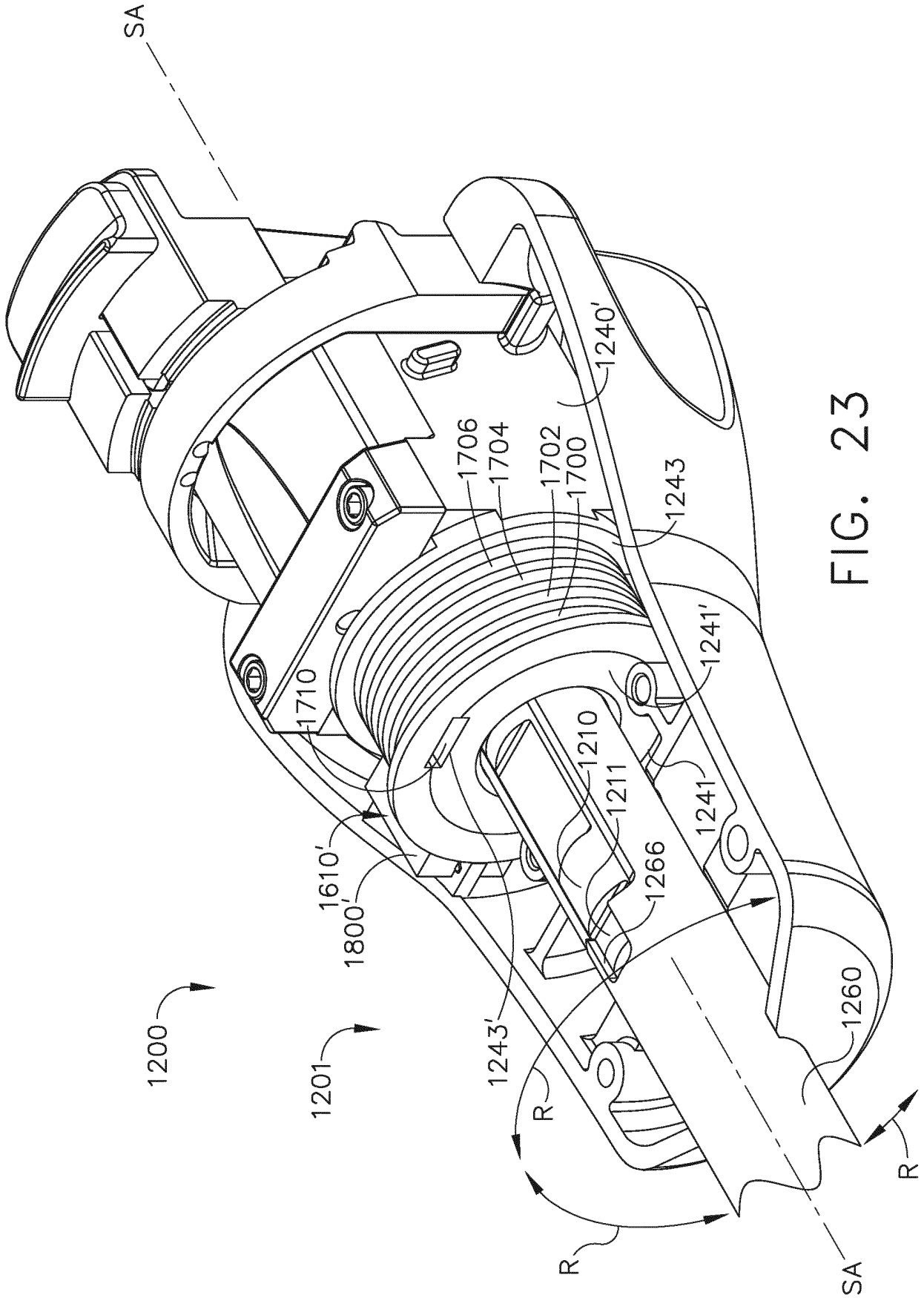
SA
1240'
1706
1704
1702
1700
1243
1241'
1710
1210
1211
1241
1610'
1800'
1266
1200
1201
1243'
1260
R
R
R
SA

FIG. 23

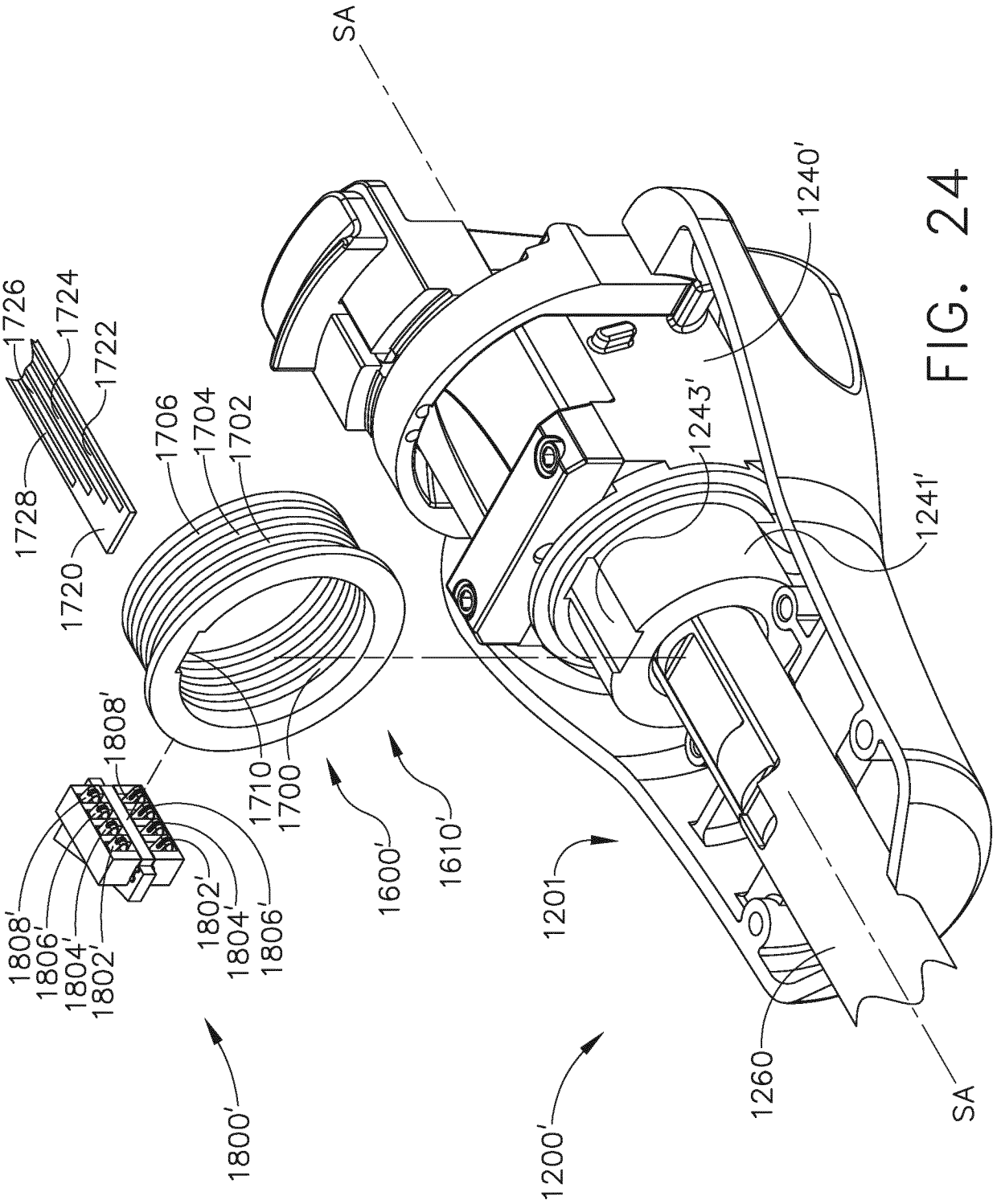
SA
1240'
1243'
1241'
1726
1724
1722
1728
1720
1706
1704
1702
1710
1700
1808'
1808'
1806'
1804'
1802'
1802'
1804'
1806'
1600'
1610'
1201
1800'
1200'
1260
SA

FIG. 24

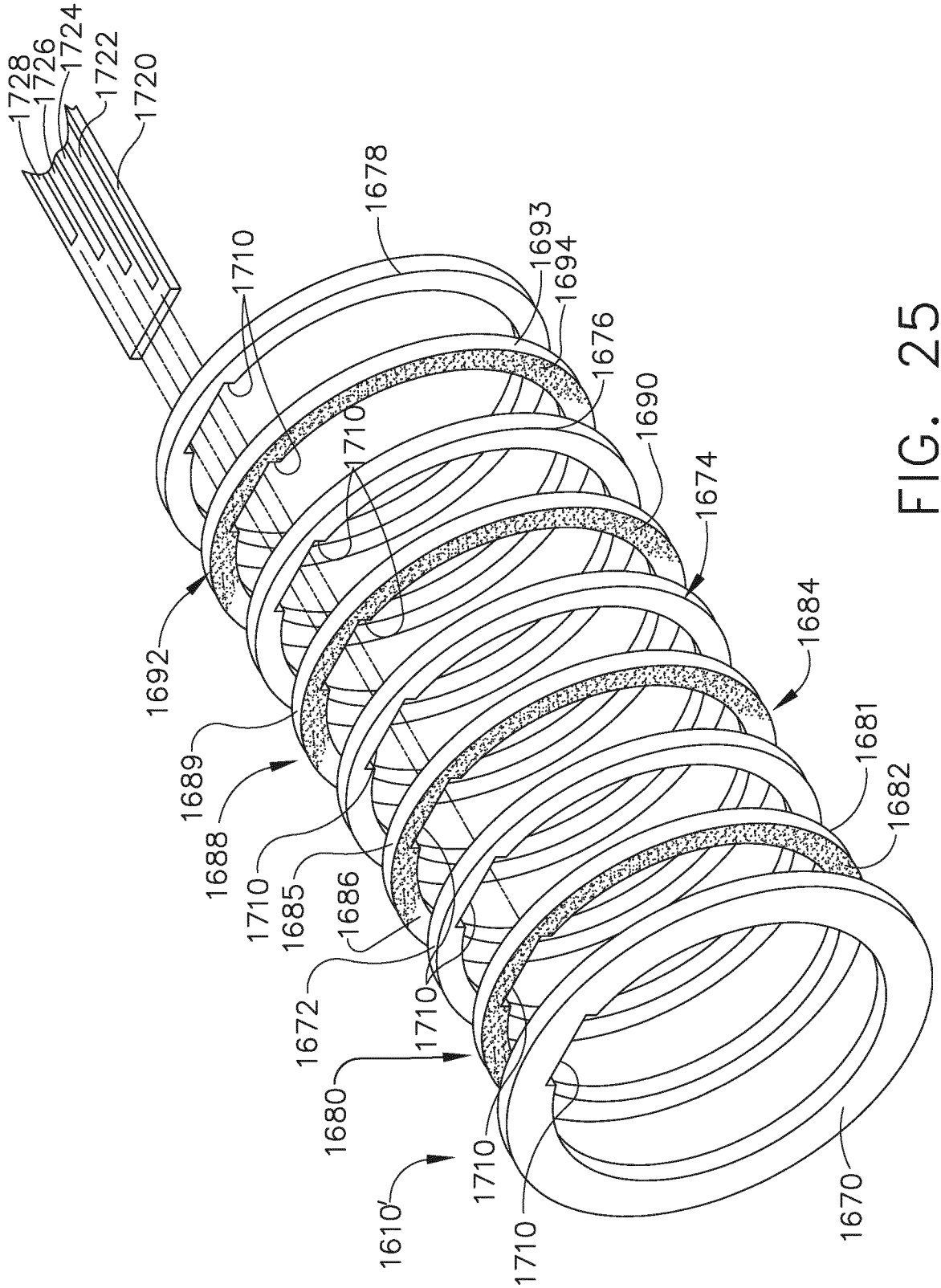
1728
1726
1724
1722
1720
1710
1678
1693
1694
1676
1690
1710
1674
1684
1692
1689
1688
1710
1685
1686
1672
1680
1610'
1710
1710
1710
1681
1682
1670

FIG. 25

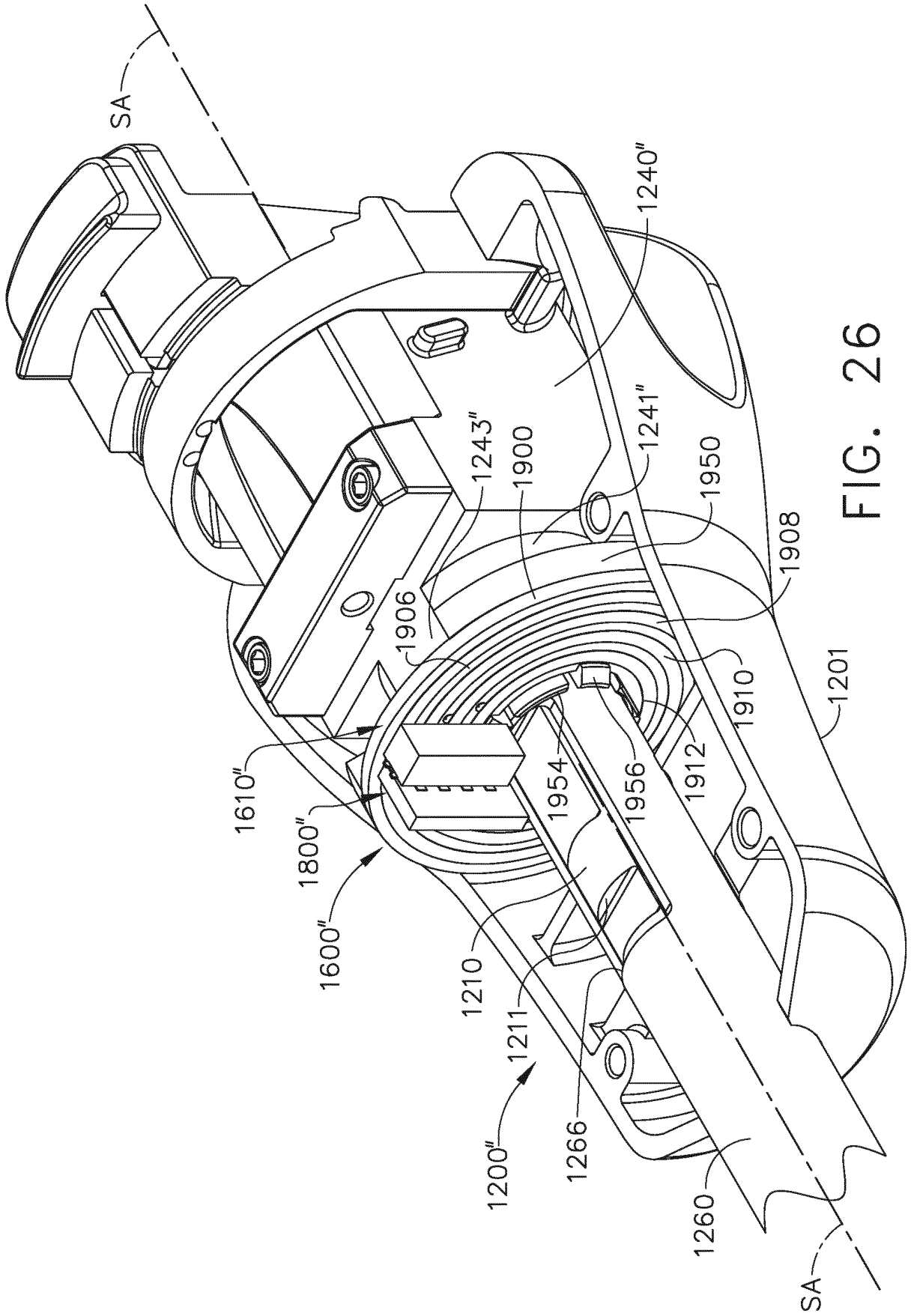
SA
1240"
1243"
1900
1241"
1950
1908
1906
1910
1201
1610"
1954
1956
1912
1800"
1600"
1210
1211
1200"
1266
1260
SA

FIG. 26

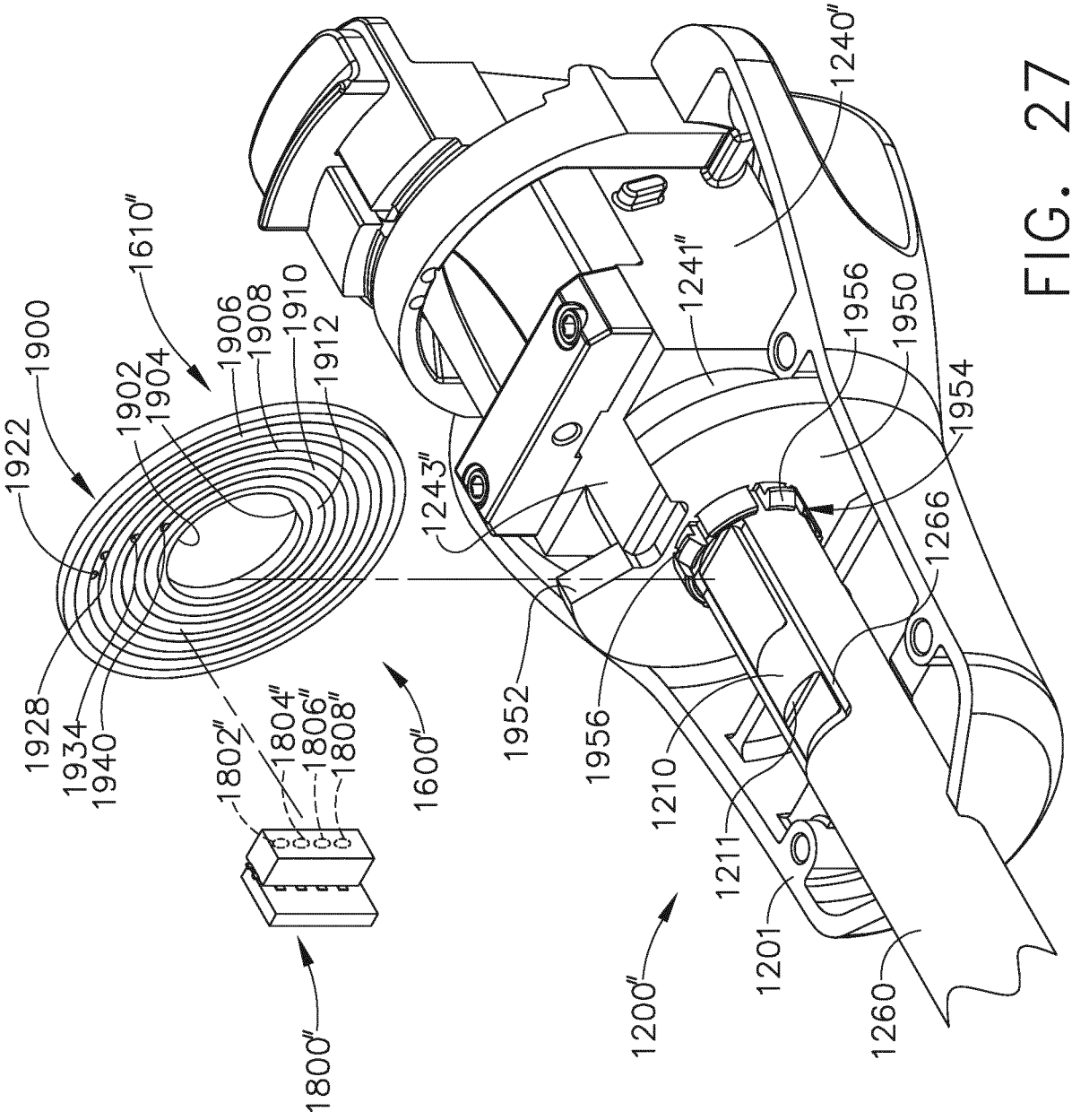
1922
1900
1610″
1902
1904
1906
1908
1910
1912
1928
1934
1940
1802″
1804″
1806″
1808″
1800″
1600″
1243″
1952
1956
1210
1211
1201
1200″
1260
1266
1954
1950
1956
1241″
1240″

FIG. 27

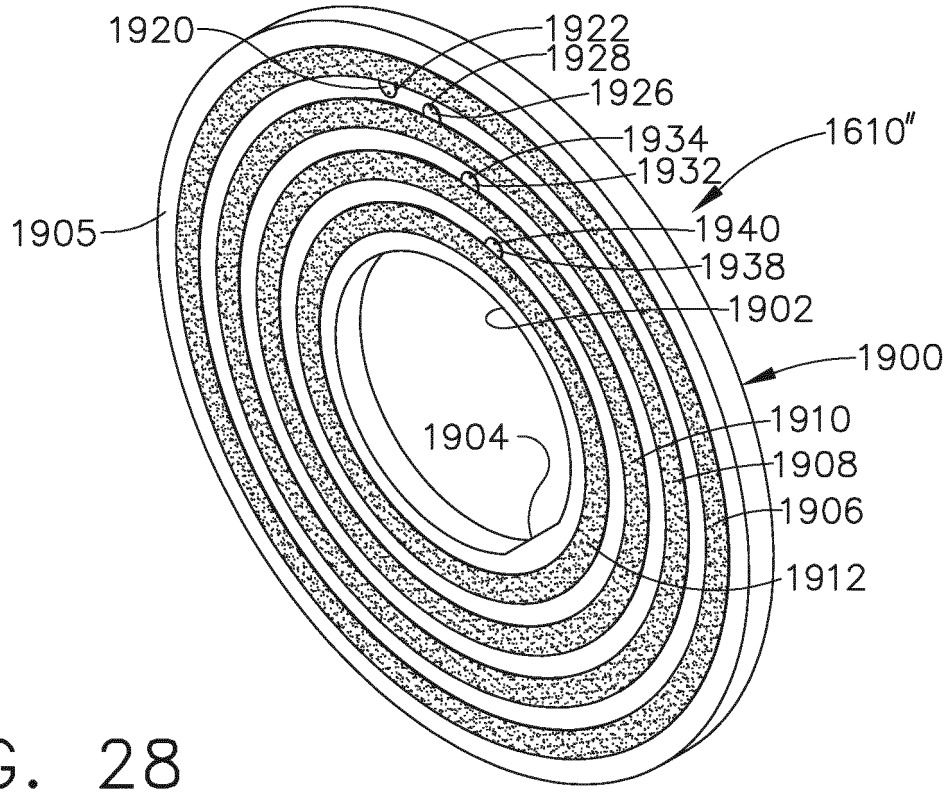
1920
1922
1928
1926
1934
1610″
1932
1905
1940
1938
1902
1900
1910
1904
1908
1906
1912

FIG. 28

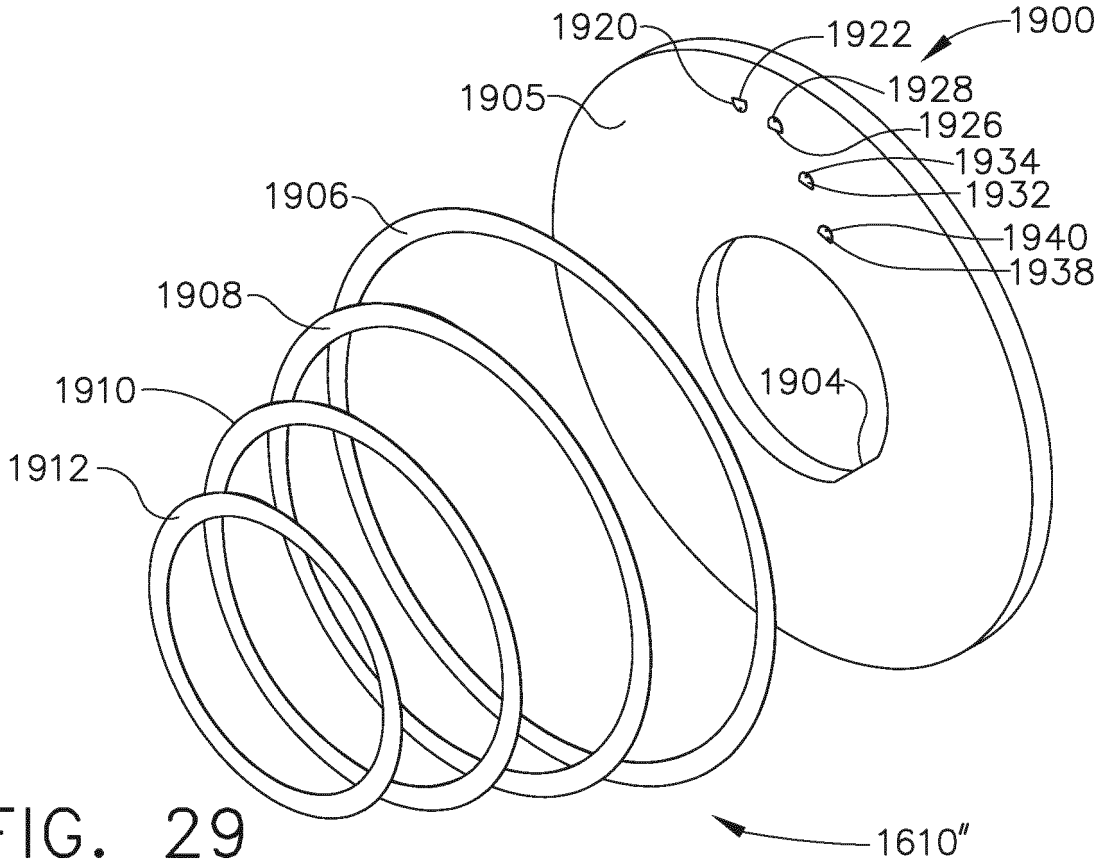
1920
1922
1900
1905
1928
1926
1934
1906
1932
1940
1938
1908
1904
1910
1912
1610″

FIG. 29

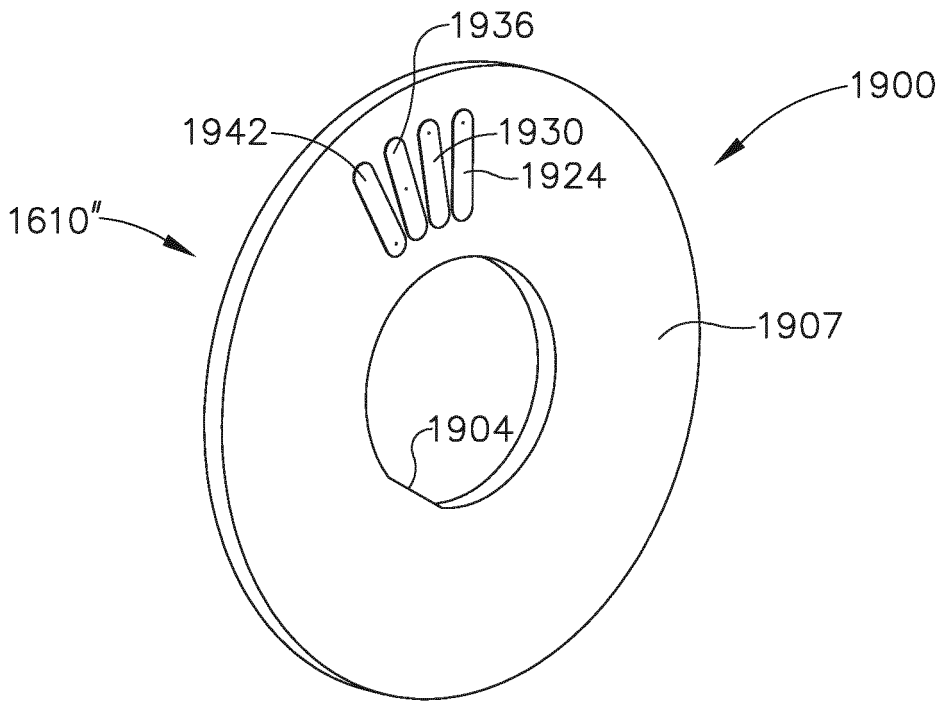

FIG. 30

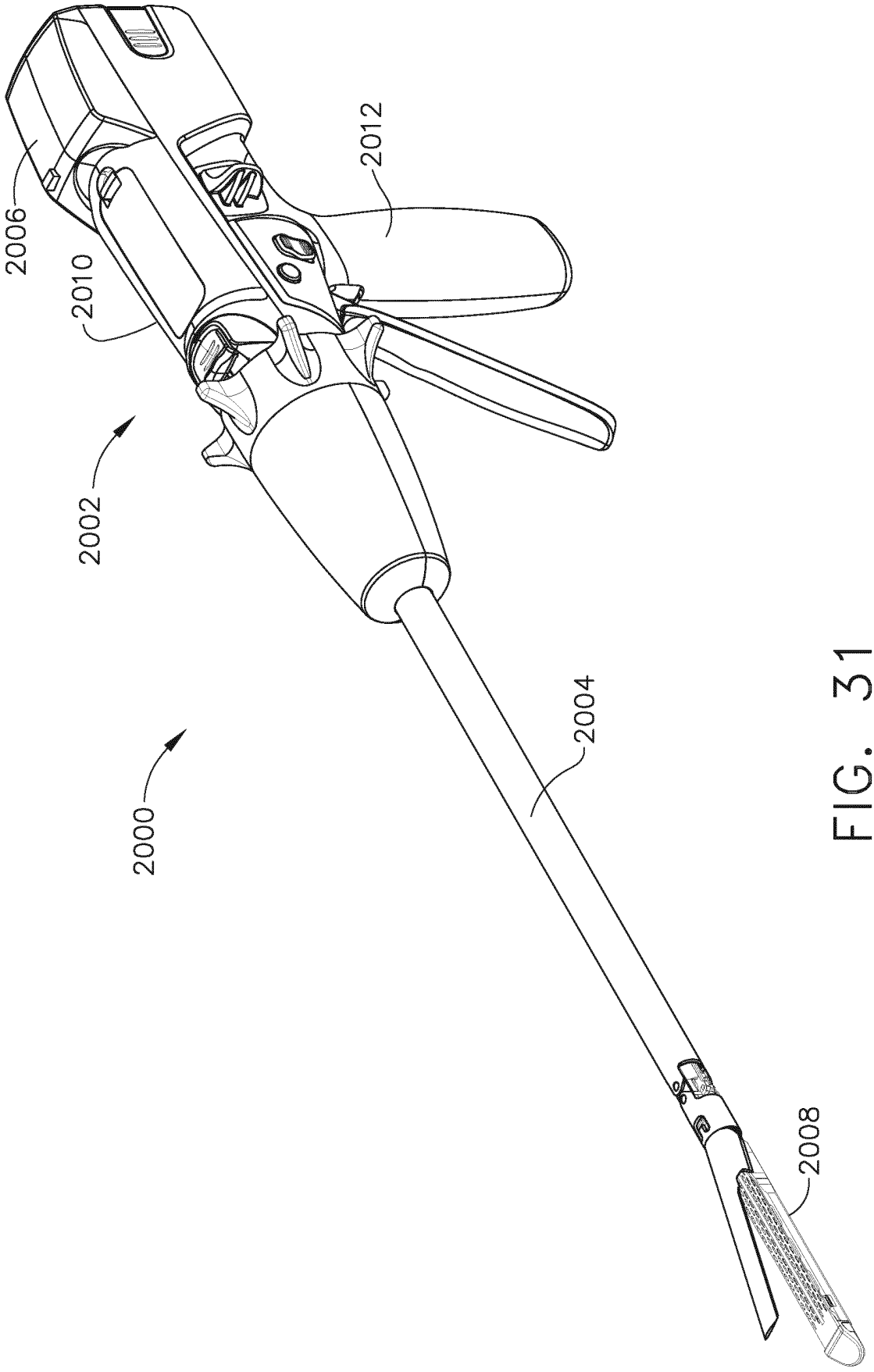

FIG. 31

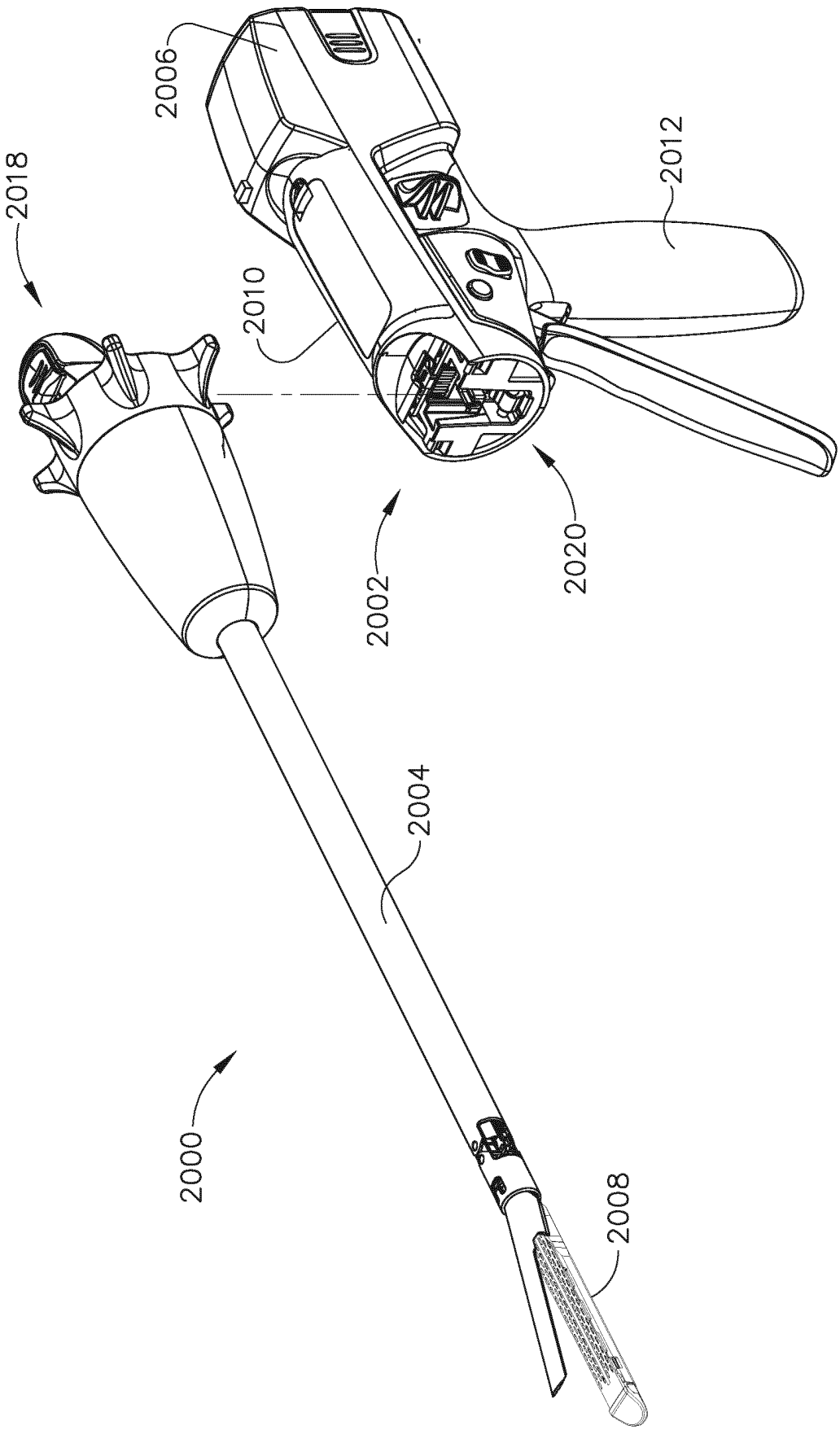

FIG. 32

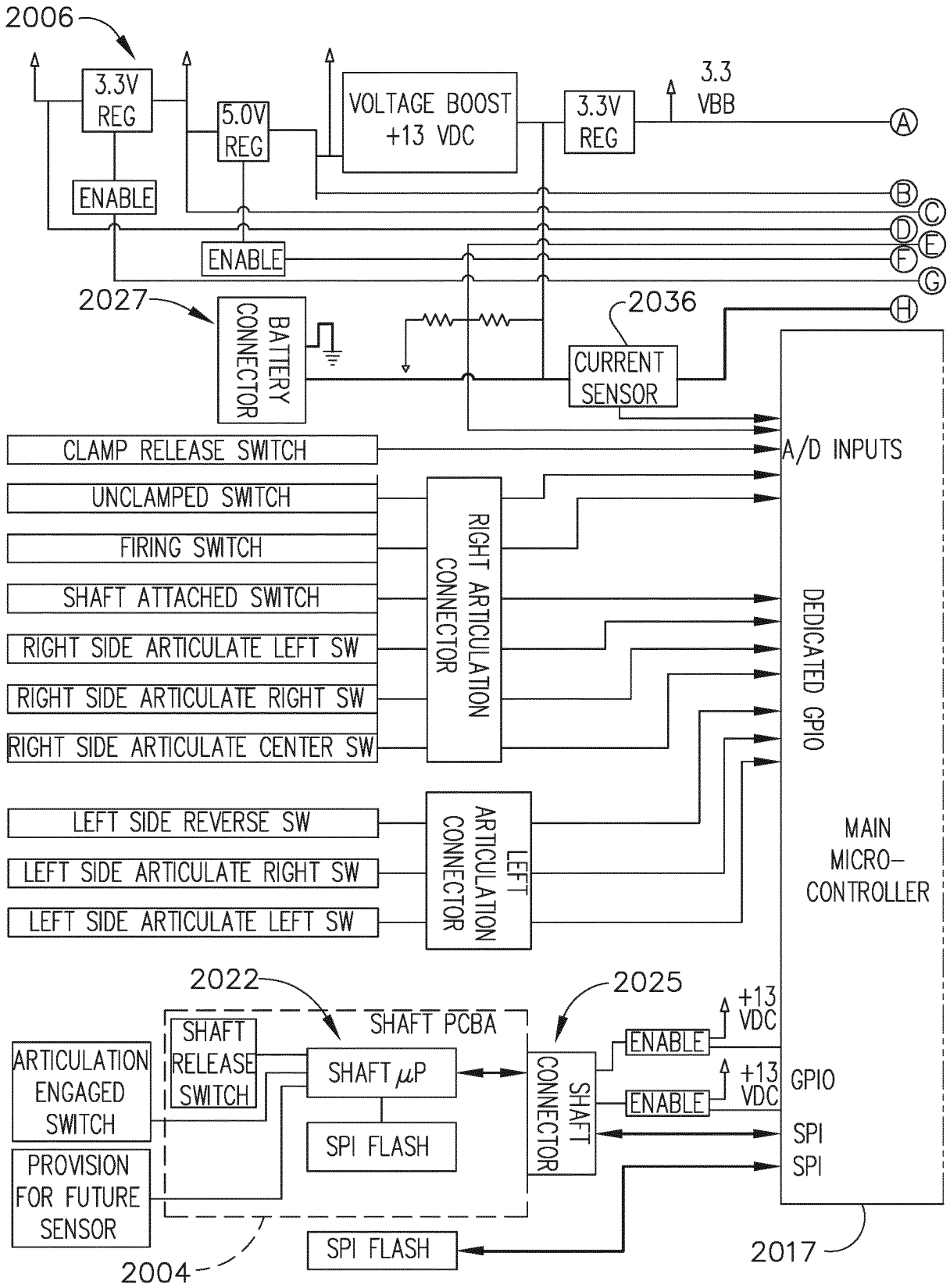
2006
3.3V REG
5.0V REG
VOLTAGE BOOST +13 VDC
3.3V REG
3.3 VBB
A
B
C
D
E
F
G
H
ENABLE
ENABLE
2027
BATTERY CONNECTOR
2036
CURRENT SENSOR
CLAMP RELEASE SWITCH
UNCLAMPED SWITCH
FIRING SWITCH
SHAFT ATTACHED SWITCH
RIGHT SIDE ARTICULATE LEFT SW
RIGHT SIDE ARTICULATE RIGHT SW
RIGHT SIDE ARTICULATE CENTER SW
RIGHT ARTICULATION CONNECTOR
A/D INPUTS
DEDICATED GPIO
LEFT SIDE REVERSE SW
LEFT SIDE ARTICULATE RIGHT SW
LEFT SIDE ARTICULATE LEFT SW
LEFT ARTICULATION CONNECTOR
MAIN MICRO-CONTROLLER
2022
2025
SHAFT PCBA
SHAFT RELEASE SWITCH
SHAFT μP
SPI FLASH
ARTICULATION ENGAGED SWITCH
PROVISION FOR FUTURE SENSOR
SHAFT CONNECTOR
ENABLE
ENABLE
+13 VDC
+13 VDC
GPIO
SPI
SPI
SPI FLASH
2004
2017

FIG. 33A

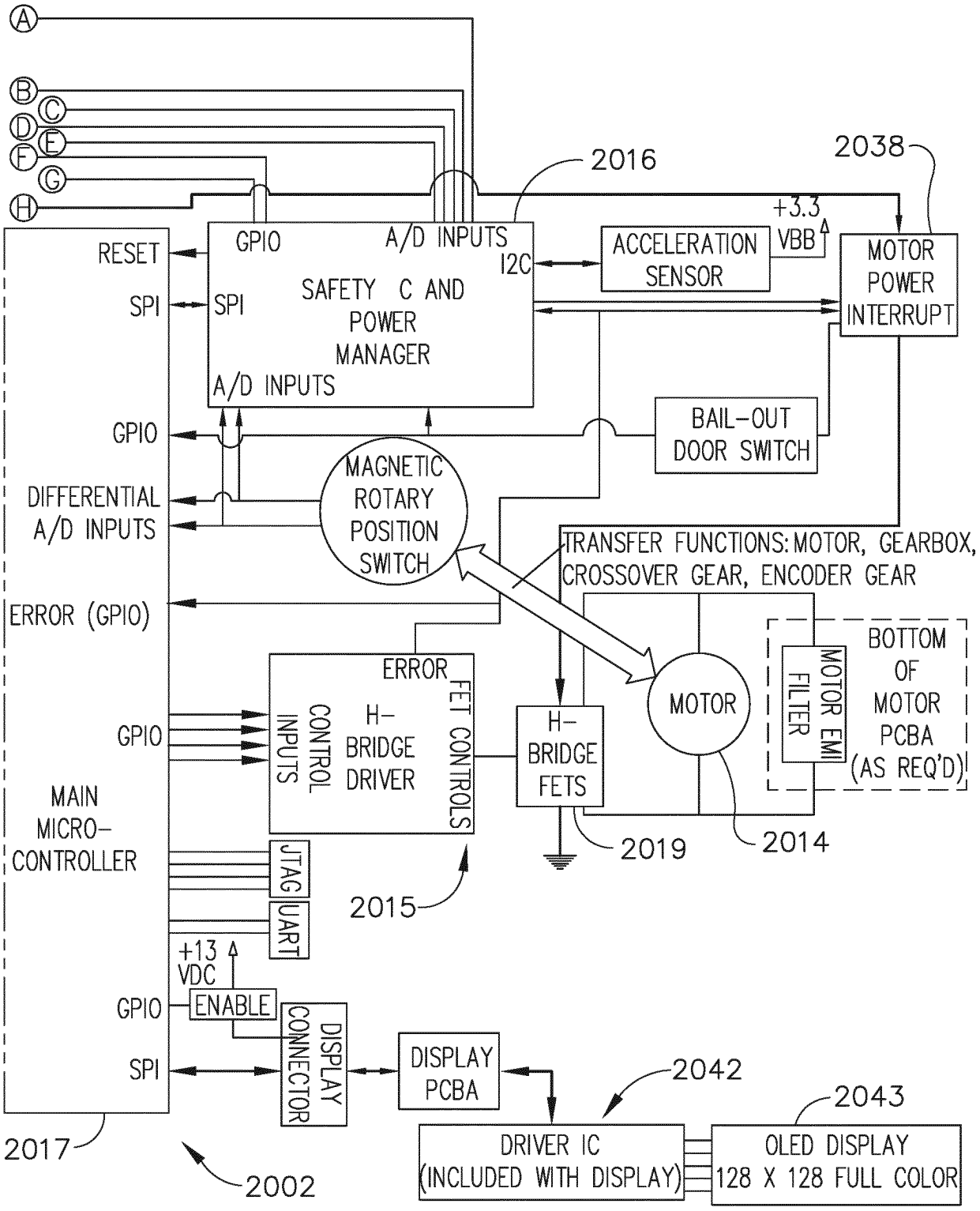
A
B
C
D
E
F
G
H
2016
2038
+3.3
VBB
RESET
SPI
GPIO
A/D INPUTS
I2C
SPI
SAFETY C AND POWER MANAGER
A/D INPUTS
ACCELERATION SENSOR
MOTOR POWER INTERRUPT
GPIO
BAIL-OUT DOOR SWITCH
DIFFERENTIAL A/D INPUTS
MAGNETIC ROTARY POSITION SWITCH
TRANSFER FUNCTIONS: MOTOR, GEARBOX, CROSSOVER GEAR, ENCODER GEAR
ERROR (GPIO)
ERROR
FET CONTROLS
CONTROL INPUTS
H-BRIDGE DRIVER
GPIO
H-BRIDGE FETS
MOTOR
MOTOR EMI FILTER
BOTTOM OF MOTOR PCBA (AS REQ'D)
MAIN MICRO-CONTROLLER
JTAG
UART
2019
2014
2015
+13 VDC
GPIO
ENABLE
DISPLAY CONNECTOR
SPI
DISPLAY PCBA
2042
2043
2017
DRIVER IC (INCLUDED WITH DISPLAY)
OLED DISPLAY 128 X 128 FULL COLOR
2002

FIG. 33B

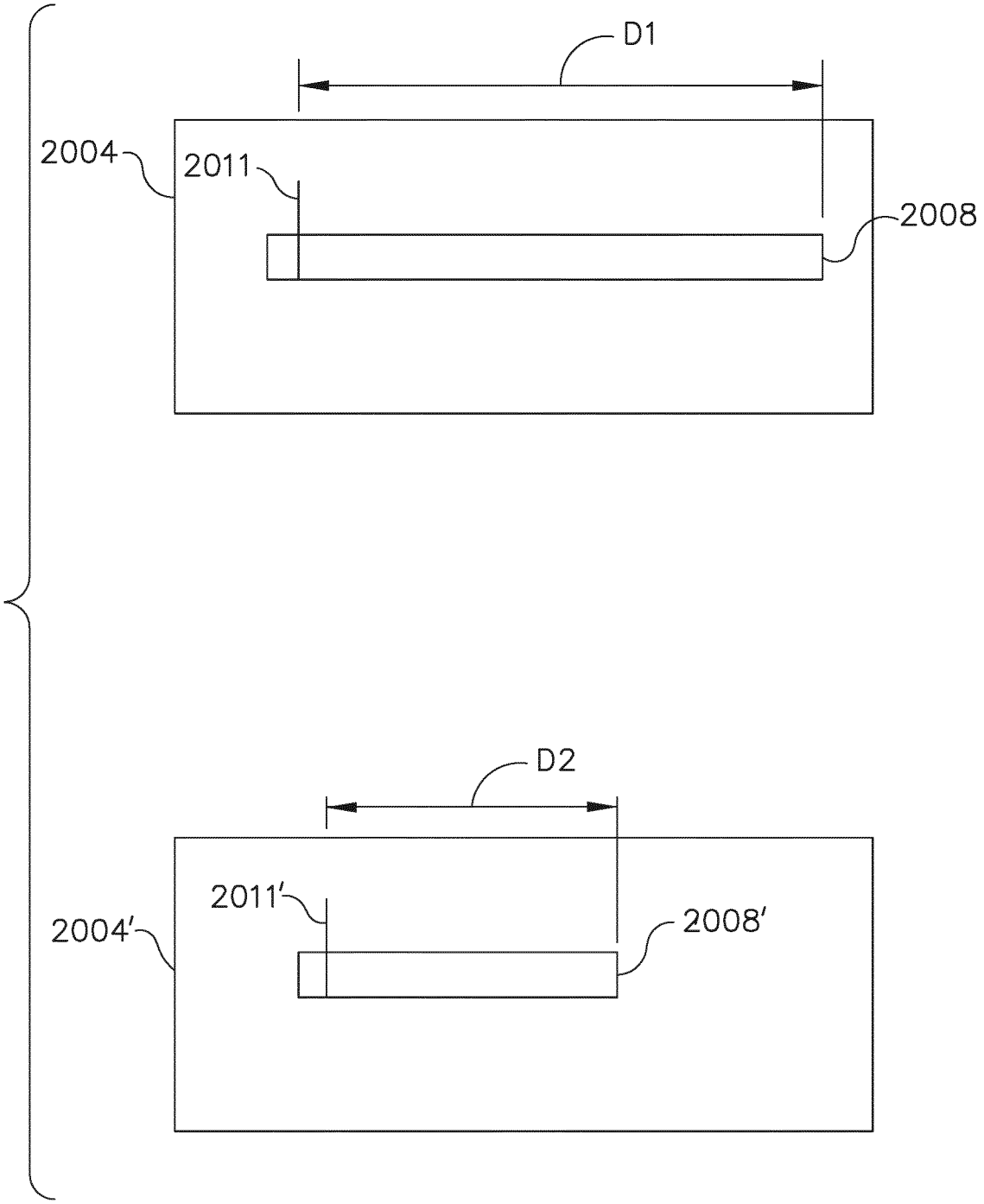

FIG. 34

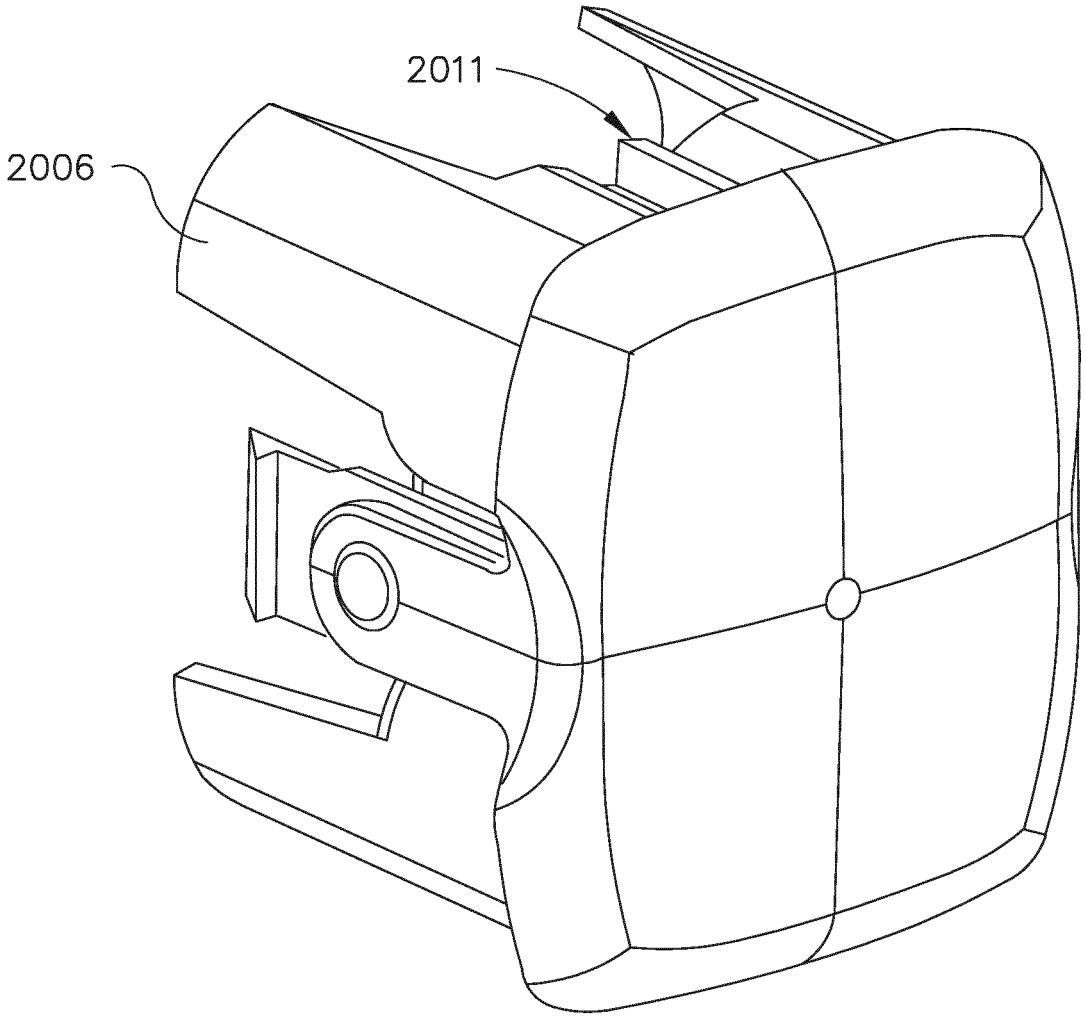

FIG. 35

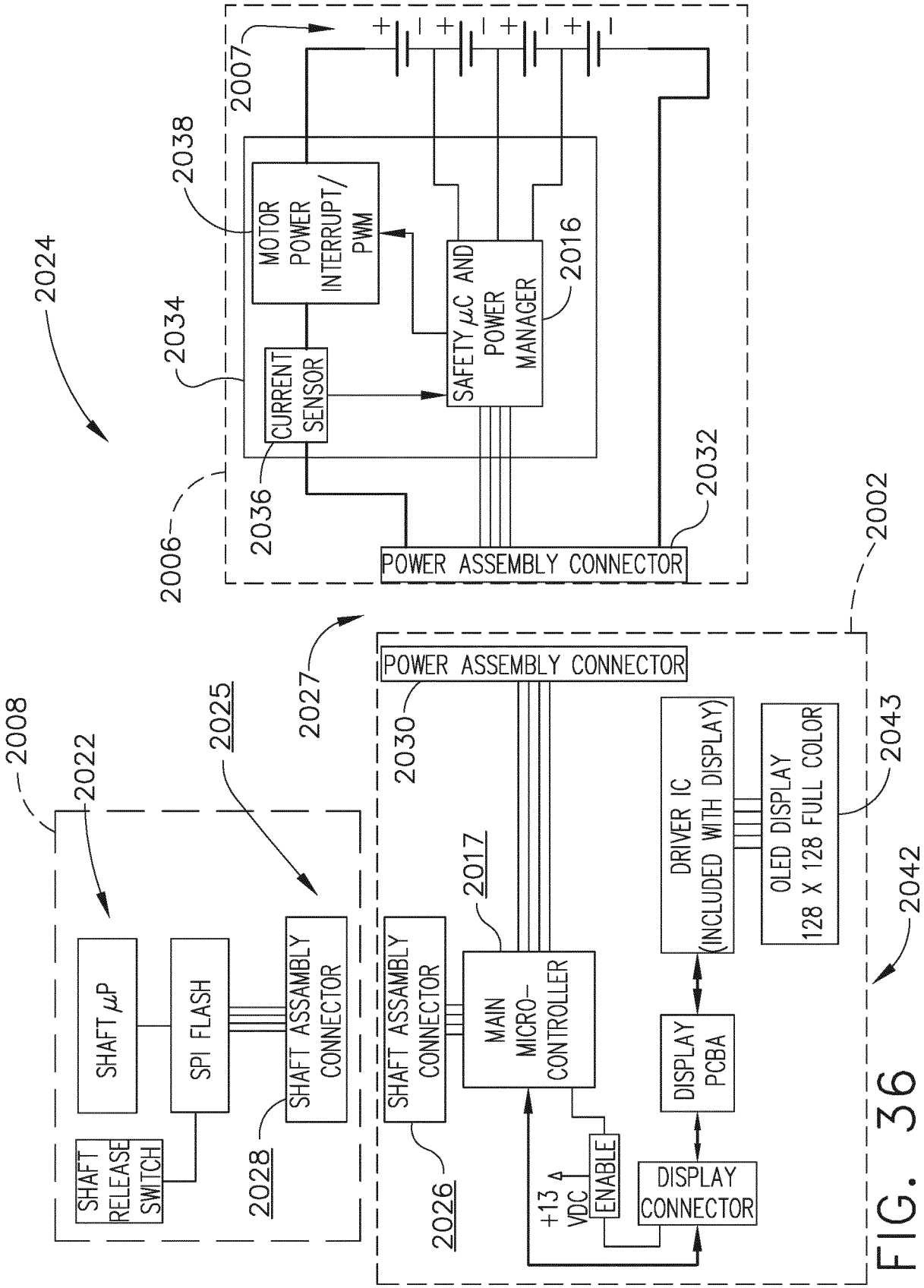
2024
2007
2038
MOTOR POWER INTERRUPT/ PWM
2016
SAFETY μC AND POWER MANAGER
2034
CURRENT SENSOR
2036
2006
2032
POWER ASSEMBLY CONNECTOR
2002
2027
POWER ASSEMBLY CONNECTOR
2030
2008
2022
2025
SHAFT μP
SPI FLASH
SHAFT ASSAMBLY CONNECTOR
SHAFT RELEASE SWITCH
2028
SHAFT ASSAMBLY CONNECTOR
2017
MAIN MICRO- CONTROLLER
2026
+13.4 VDC
ENABLE
DRIVER IC (INCLUDED WITH DISPLAY)
OLED DISPLAY 128 X 128 FULL COLOR
2043
2042
DISPLAY PCBA
DISPLAY CONNECTOR

FIG. 36

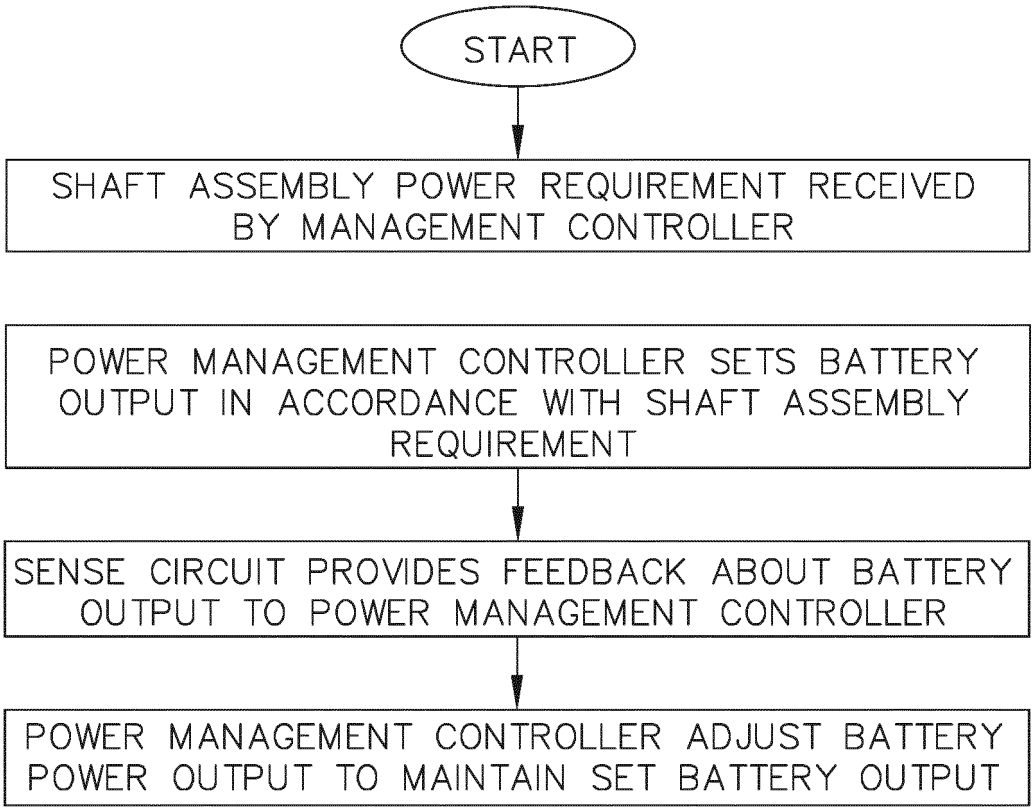
START
SHAFT ASSEMBLY POWER REQUIREMENT RECEIVED BY MANAGEMENT CONTROLLER
POWER MANAGEMENT CONTROLLER SETS BATTERY OUTPUT IN ACCORDANCE WITH SHAFT ASSEMBLY REQUIREMENT
SENSE CIRCUIT PROVIDES FEEDBACK ABOUT BATTERY OUTPUT TO POWER MANAGEMENT CONTROLLER
POWER MANAGEMENT CONTROLLER ADJUST BATTERY POWER OUTPUT TO MAINTAIN SET BATTERY OUTPUT

FIG. 37

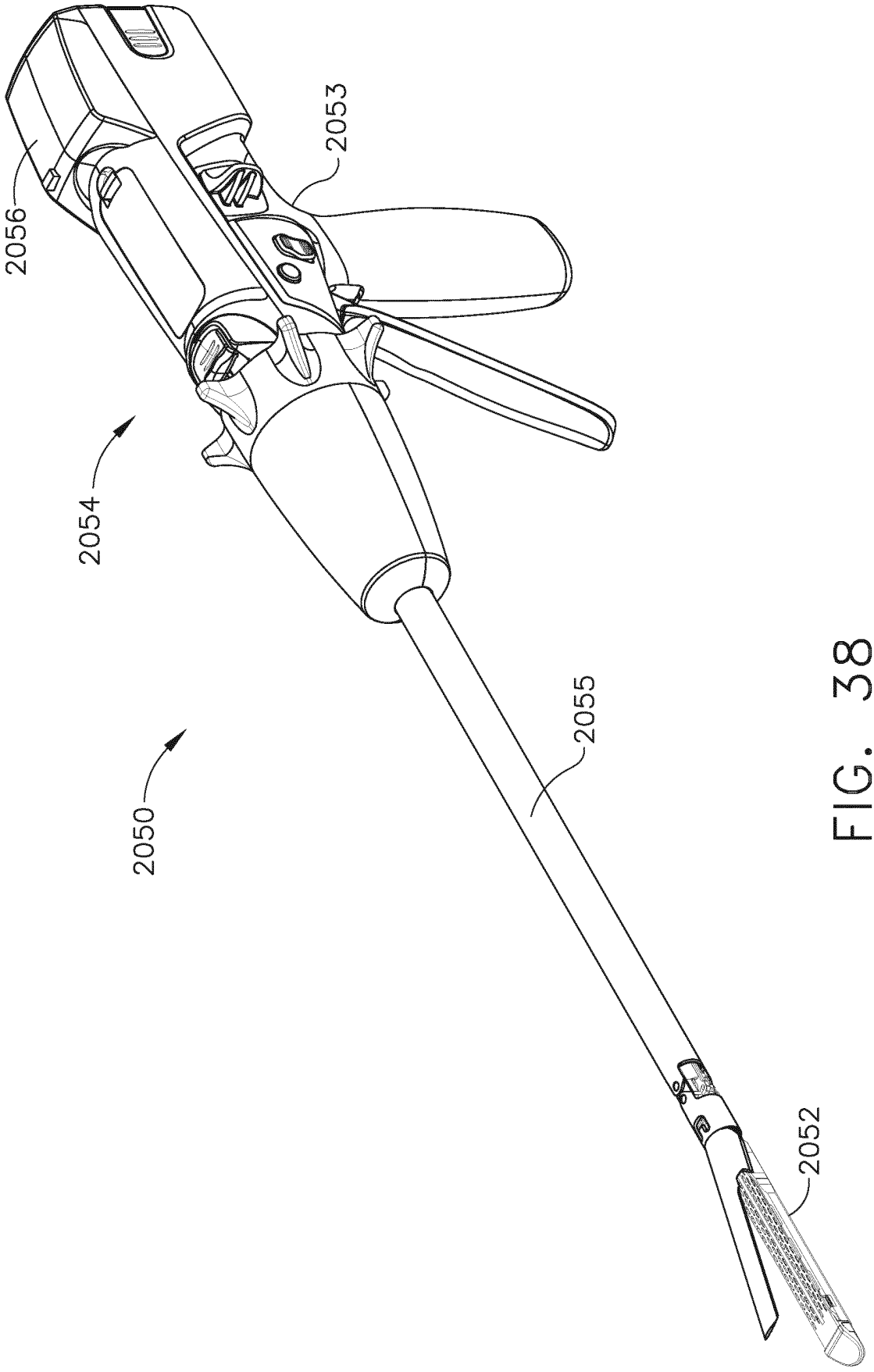

FIG. 38

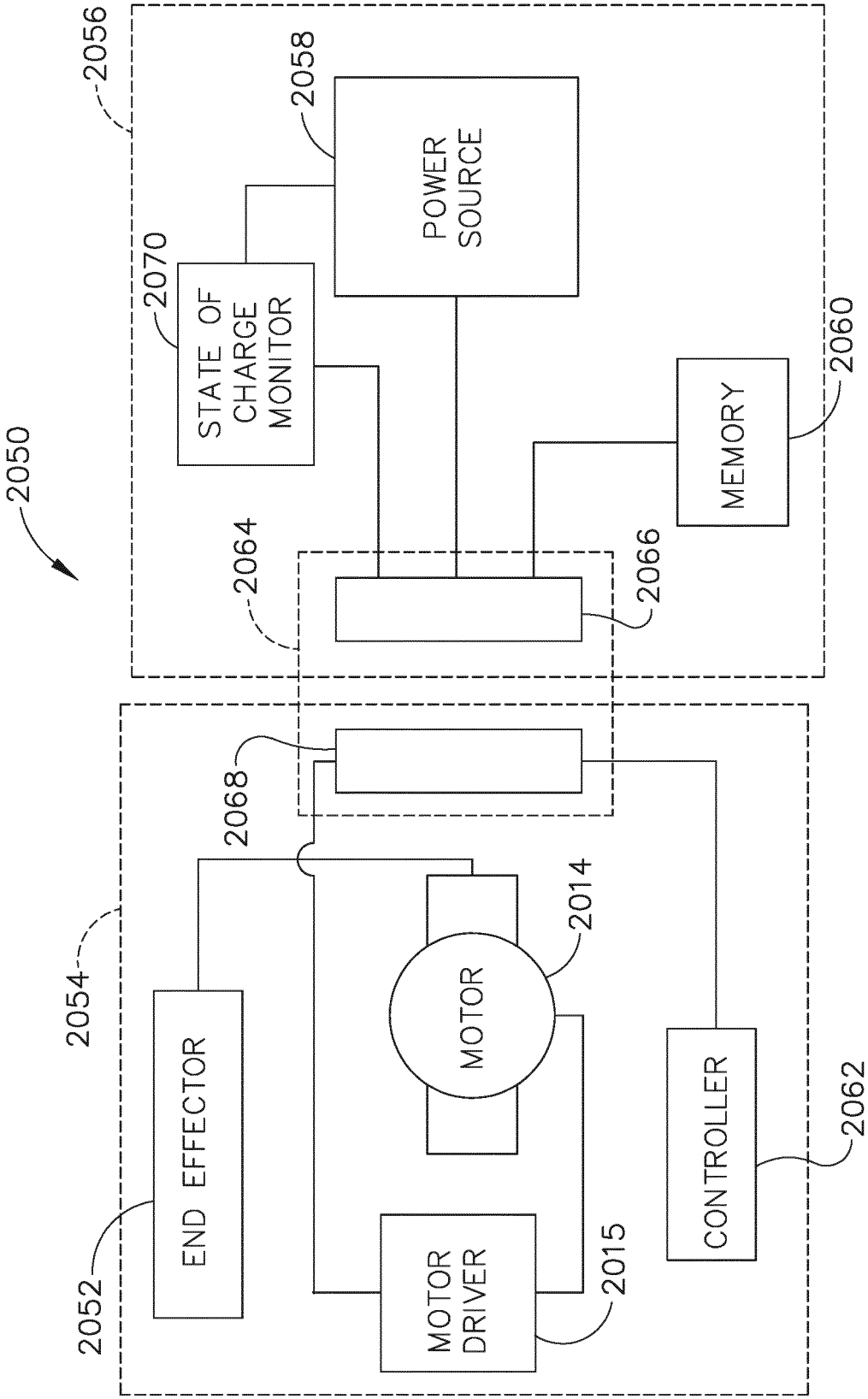
2050
2056
2058
POWER SOURCE
2070
STATE OF CHARGE MONITOR
2060
MEMORY
2064
2066
2068
2054
2014
MOTOR
END EFFECTOR
2052
MOTOR DRIVER
2015
CONTROLLER
2062

FIG. 39

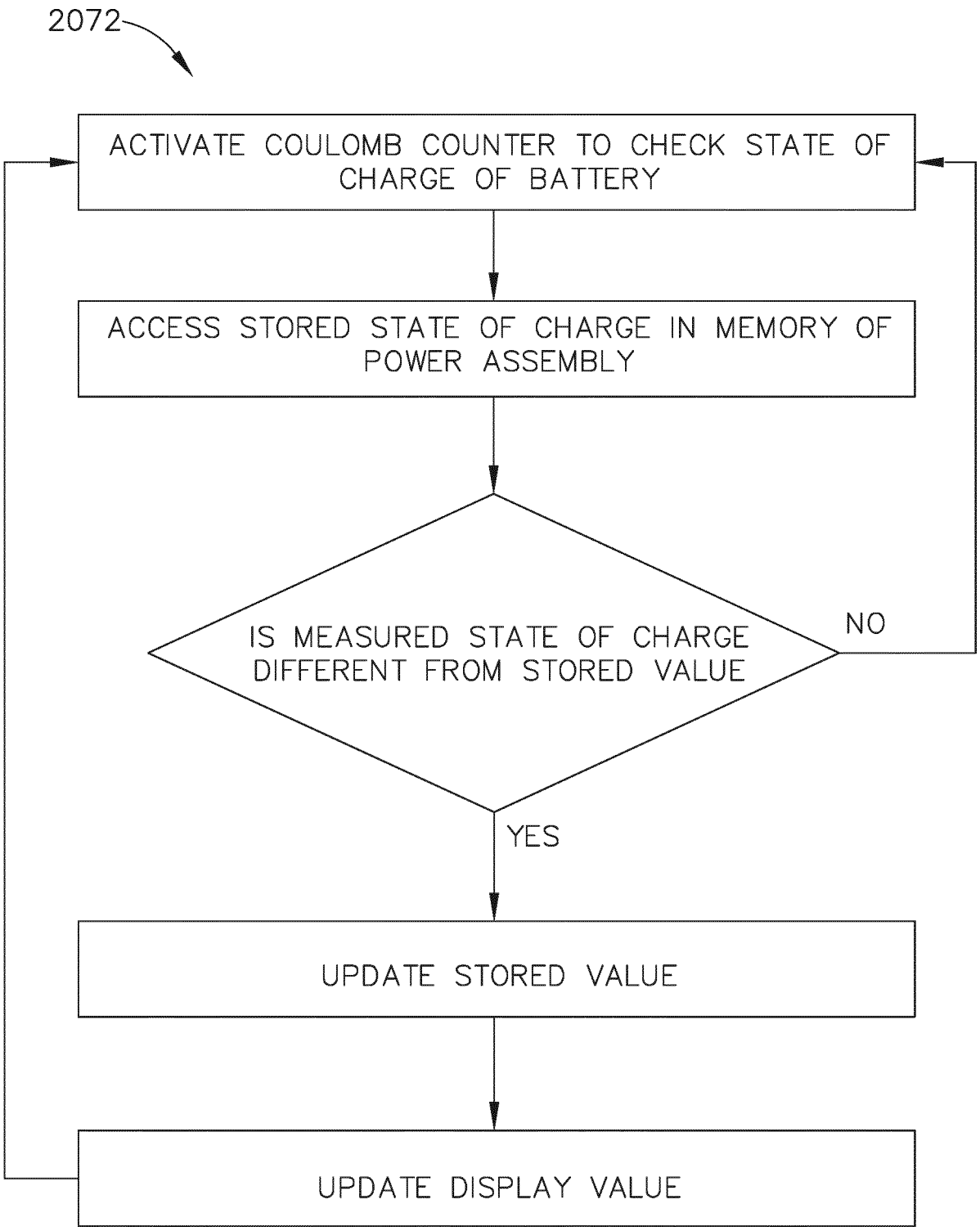
2072
ACTIVATE COULOMB COUNTER TO CHECK STATE OF CHARGE OF BATTERY
ACCESS STORED STATE OF CHARGE IN MEMORY OF POWER ASSEMBLY
IS MEASURED STATE OF CHARGE DIFFERENT FROM STORED VALUE
NO
YES
UPDATE STORED VALUE
UPDATE DISPLAY VALUE

FIG. 40

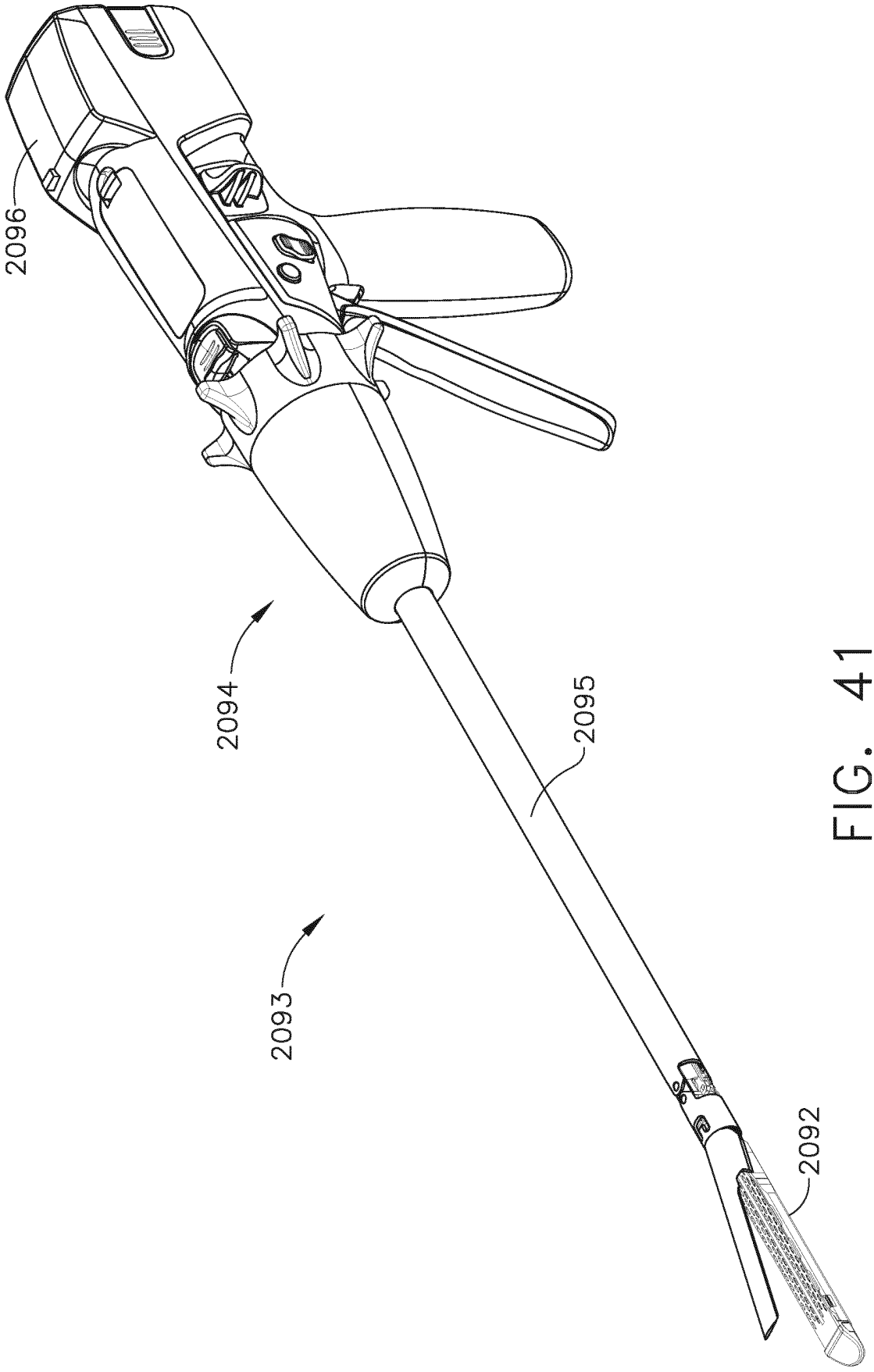

FIG. 41

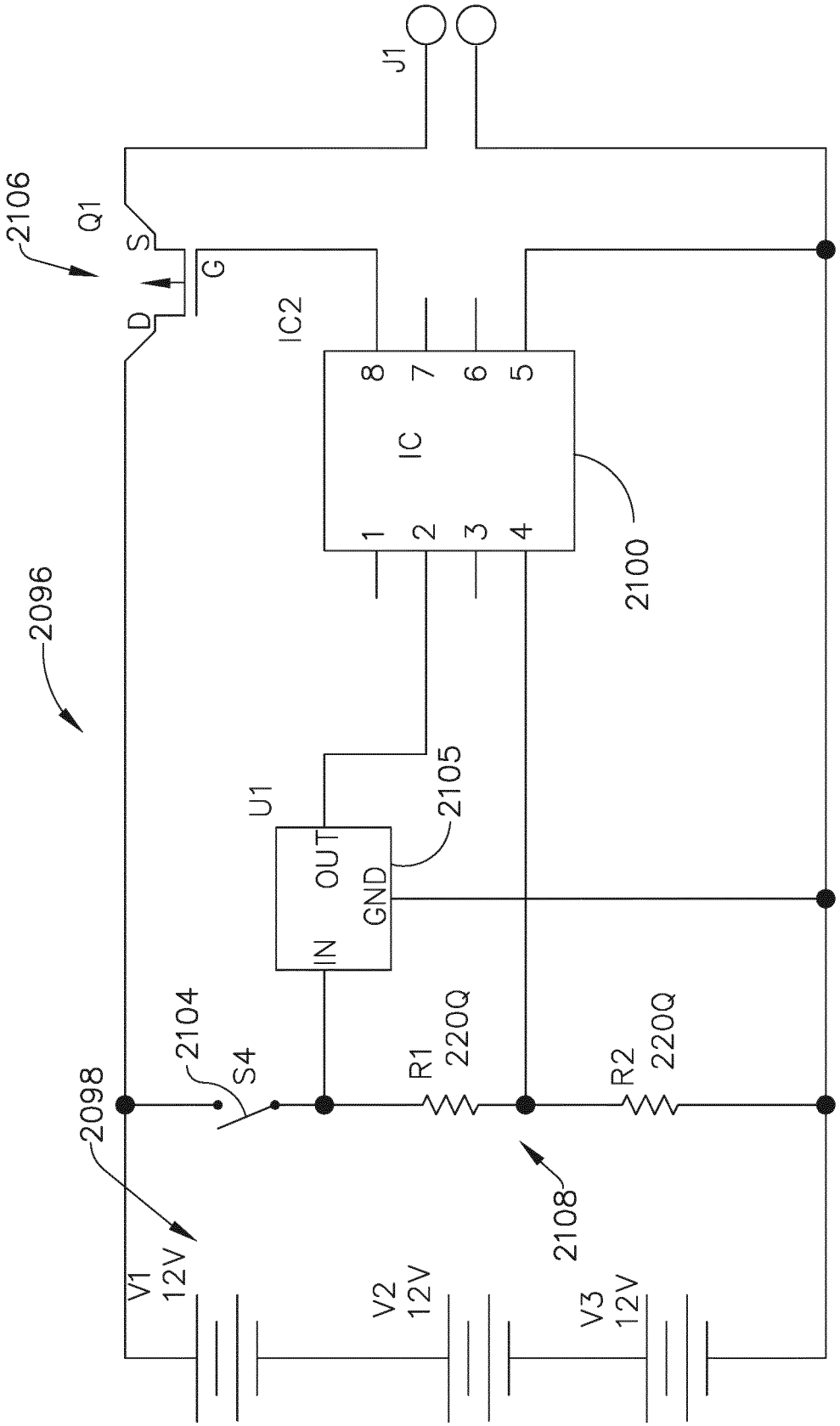
J1
2106
Q1
S
G
D
IC2
8
7
6
5
IC
1
2
3
4
2100
2096
U1
2105
OUT
GND
IN
2104
S4
R1
220Ω
R2
220Ω
2098
2108
V1
12V
V2
12V
V3
12V

FIG. 42

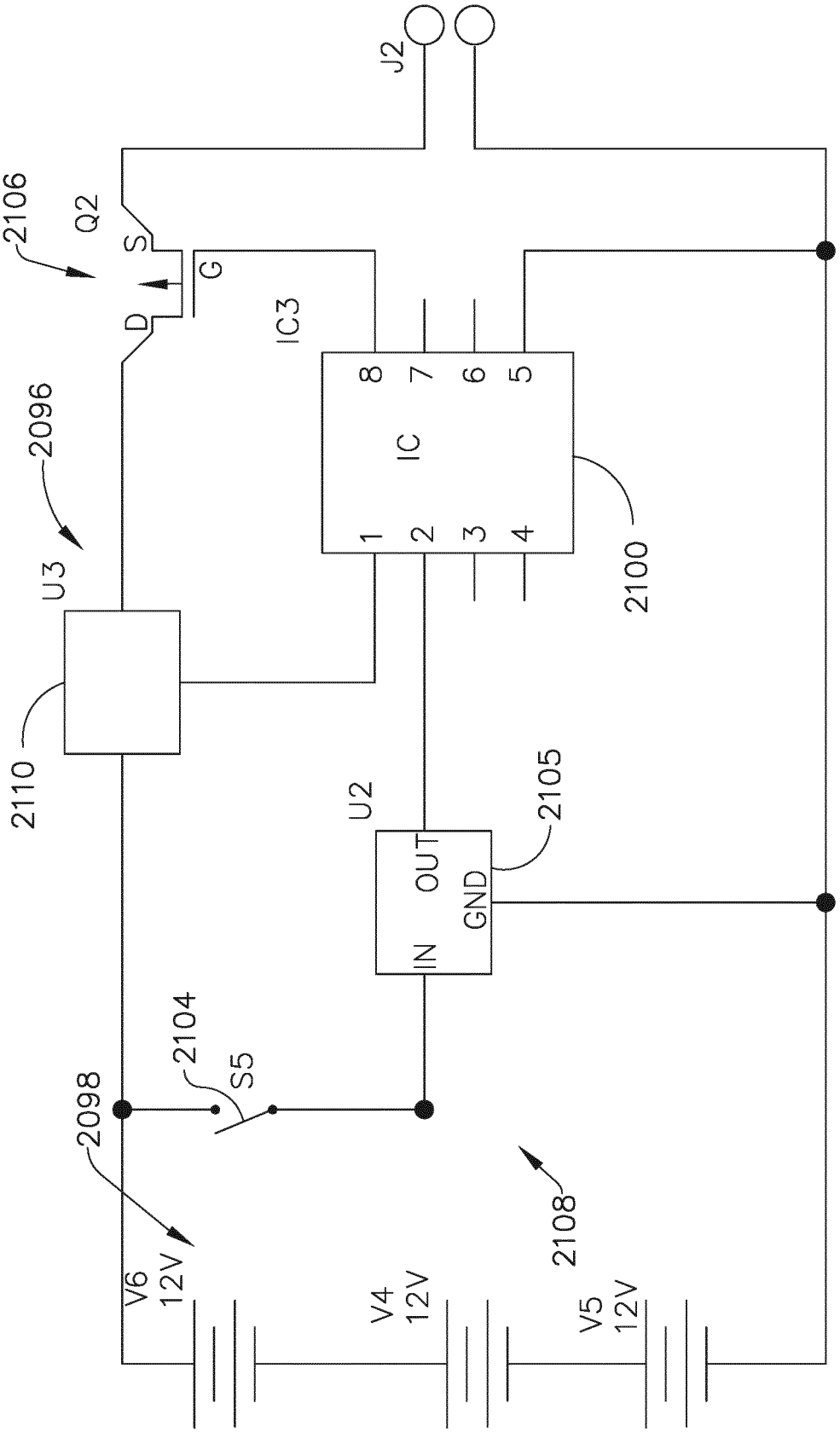
J2
2106
Q2
S
G
D
IC3
8
7
6
5
IC
1
2
3
4
2100
2096
U3
2110
U2
2105
OUT
GND
IN
2104
S5
2098
2108
V6
12V
V4
12V
V5
12V

FIG. 43

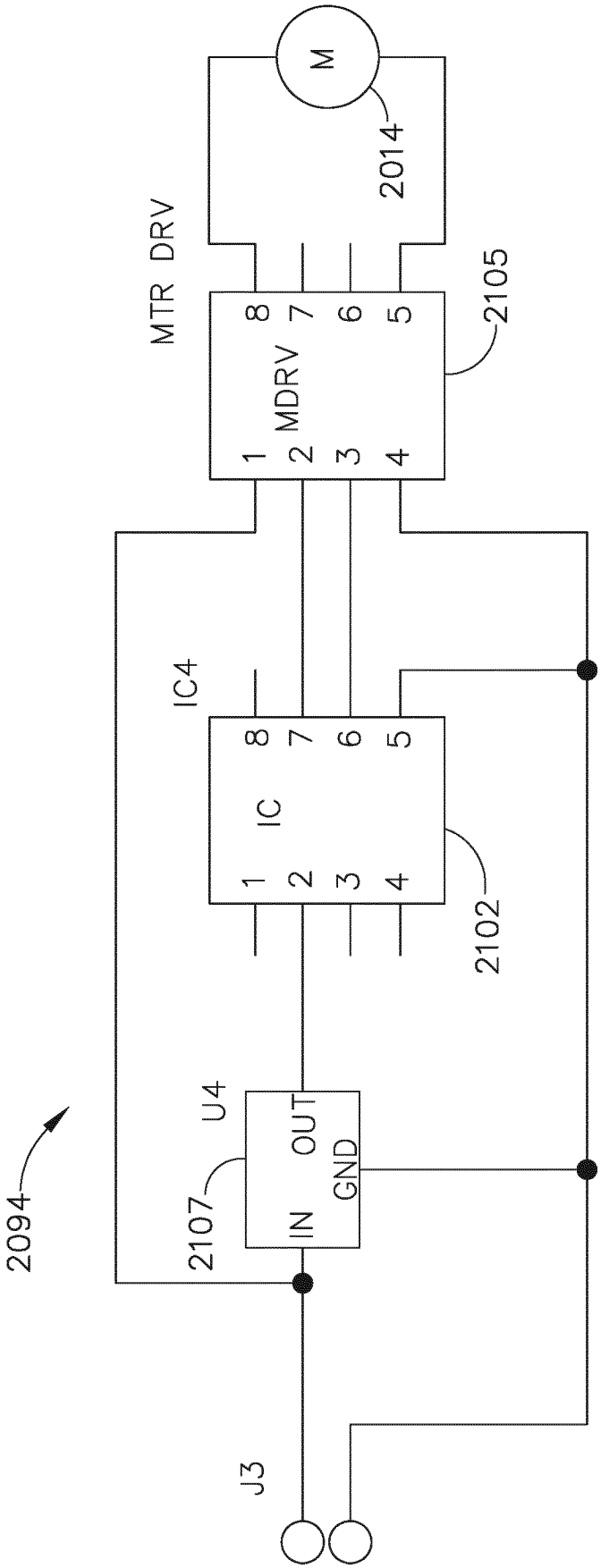
2094
J3
2107
U4
IN
OUT
GND
IC4
IC
1
2
3
4
5
6
7
8
2102
MTR DRV
MDRV
2105
M
2014

FIG. 44

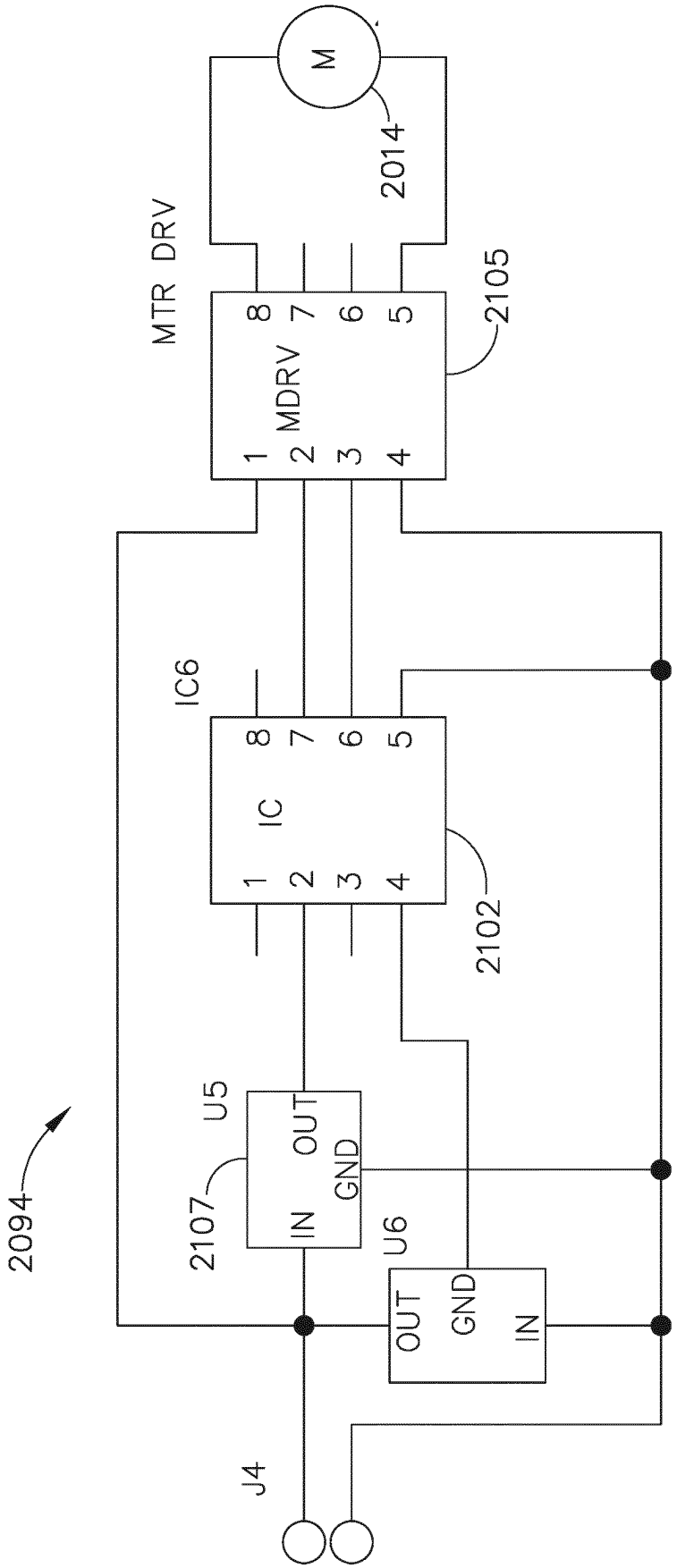
M
2014
MTR DRV
MDRV
1
2
3
4
5
6
7
8
2105
IC6
IC
2102
U5
OUT
GND
IN
2107
U6
OUT
GND
IN
2094
J4

FIG. 45

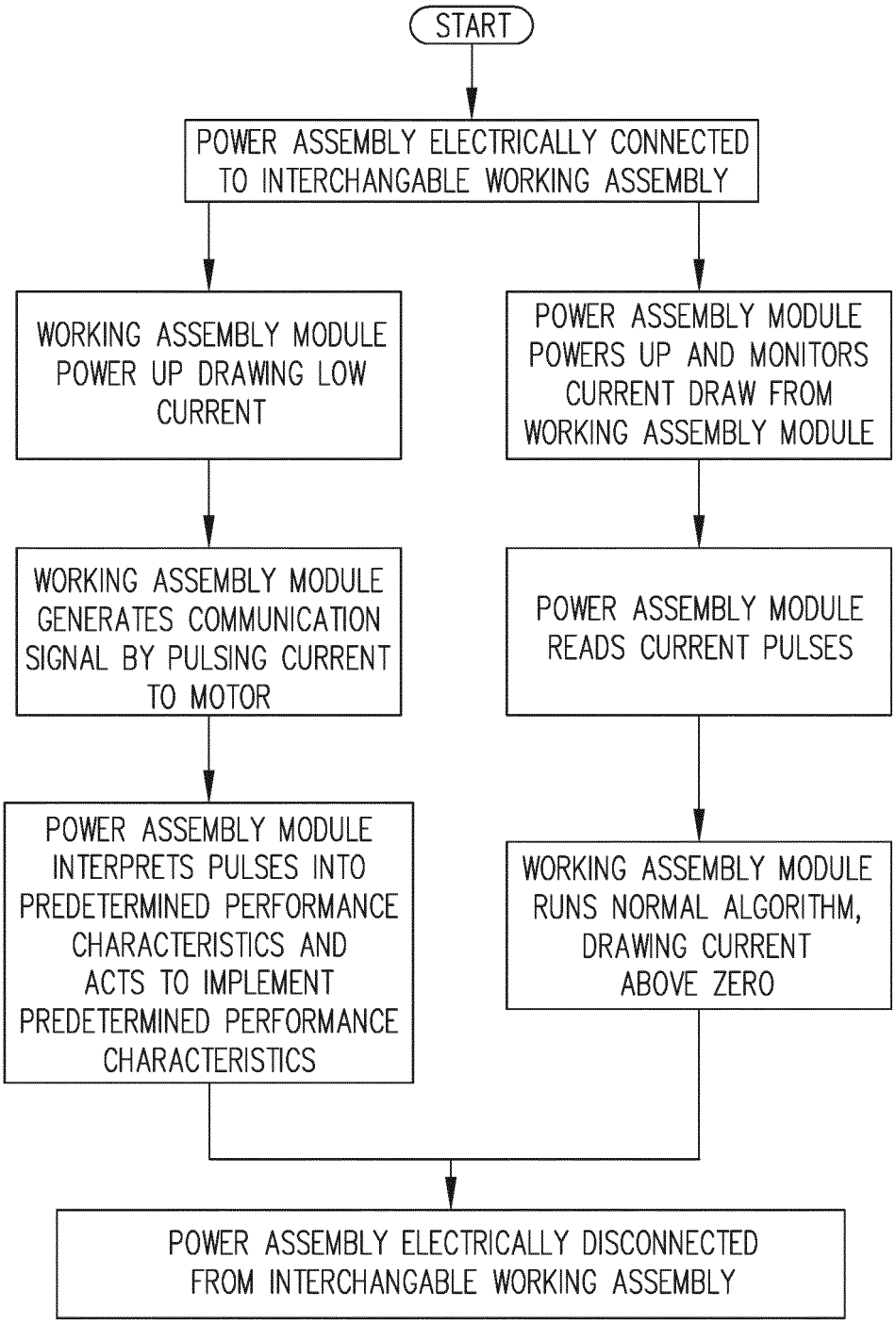
START
POWER ASSEMBLY ELECTRICALLY CONNECTED TO INTERCHANGABLE WORKING ASSEMBLY
WORKING ASSEMBLY MODULE POWER UP DRAWING LOW CURRENT
POWER ASSEMBLY MODULE POWERS UP AND MONITORS CURRENT DRAW FROM WORKING ASSEMBLY MODULE
WORKING ASSEMBLY MODULE GENERATES COMMUNICATION SIGNAL BY PULSING CURRENT TO MOTOR
POWER ASSEMBLY MODULE READS CURRENT PULSES
POWER ASSEMBLY MODULE INTERPRETS PULSES INTO PREDETERMINED PERFORMANCE CHARACTERISTICS AND ACTS TO IMPLEMENT PREDETERMINED PERFORMANCE CHARACTERISTICS
WORKING ASSEMBLY MODULE RUNS NORMAL ALGORITHM, DRAWING CURRENT ABOVE ZERO
POWER ASSEMBLY ELECTRICALLY DISCONNECTED FROM INTERCHANGABLE WORKING ASSEMBLY

FIG. 46

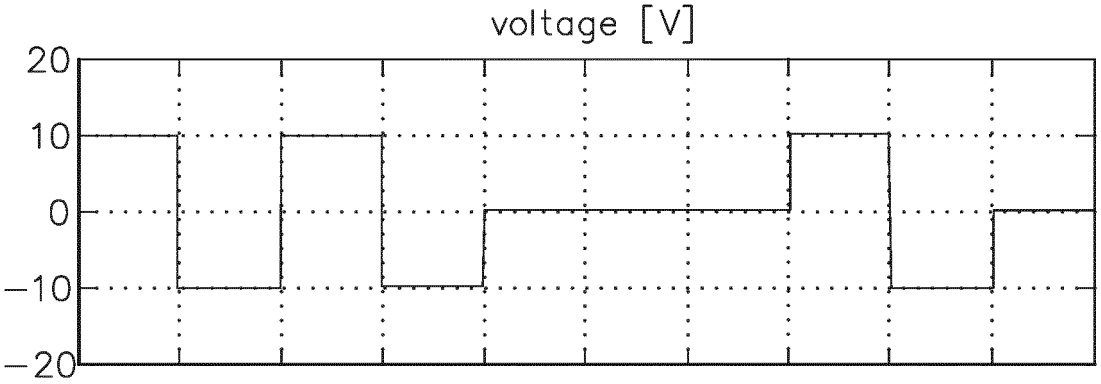

FIG. 47A

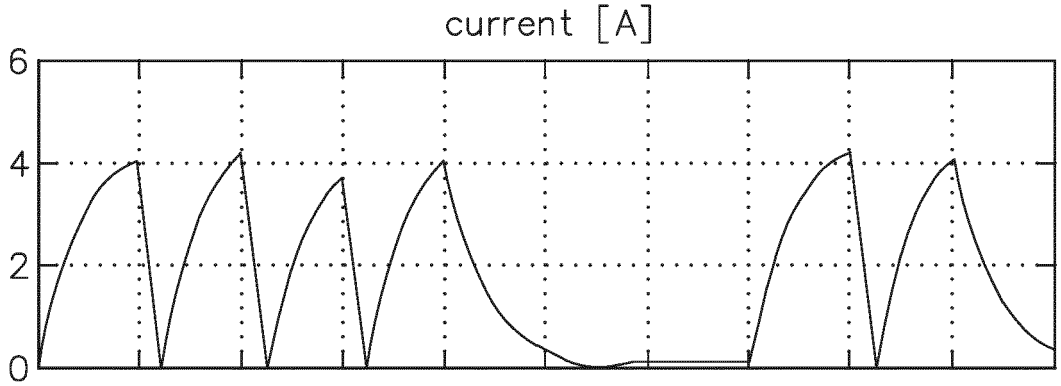

FIG. 47B

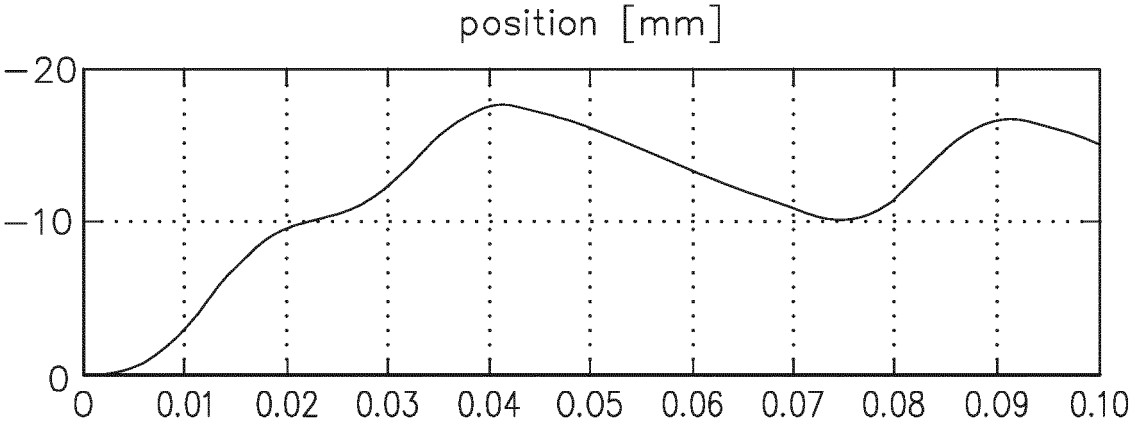

FIG. 47C

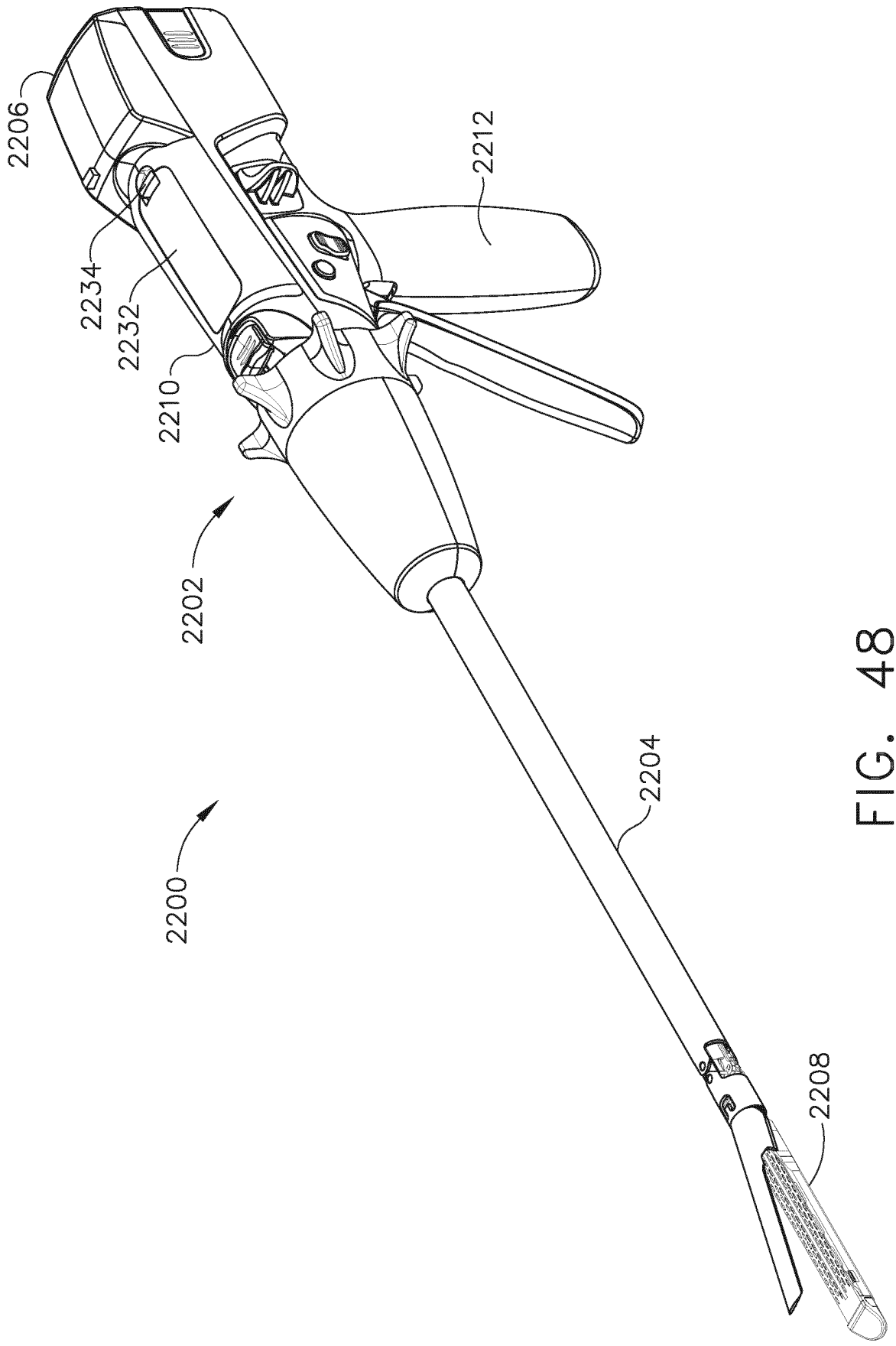

FIG. 48

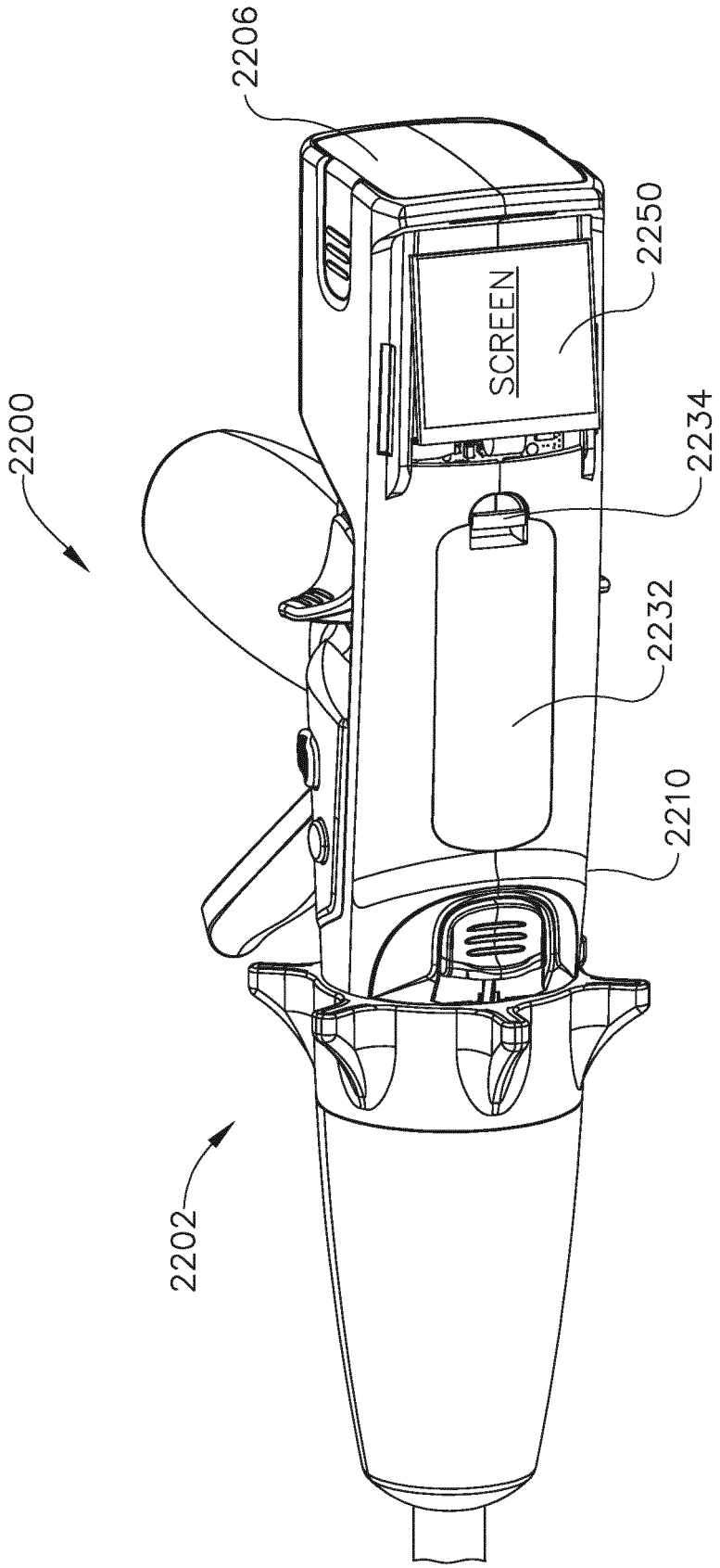

FIG. 49

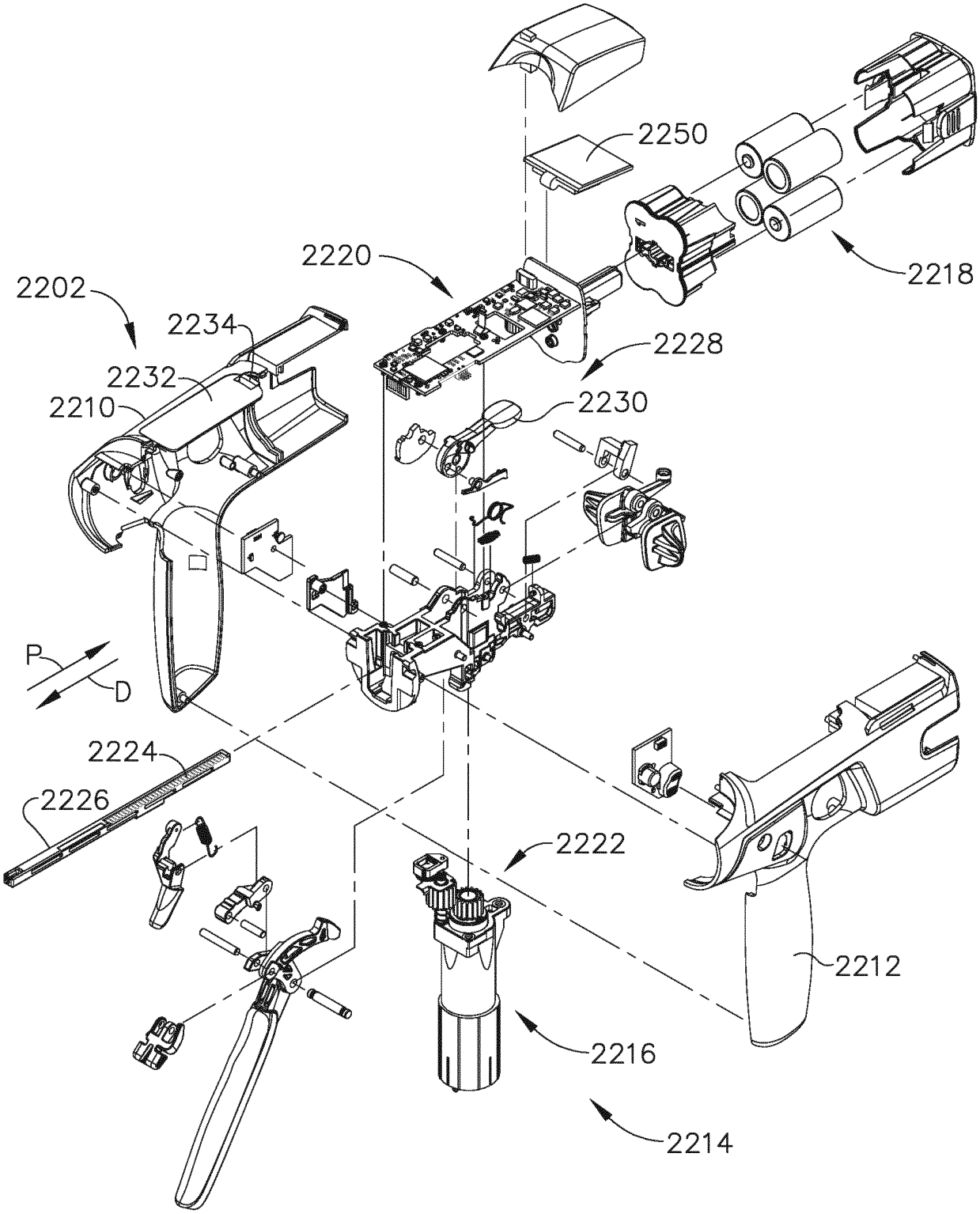
2250
2220
2218
2202
2234
2228
2232
2210
2230
P
D
2224
2226
2222
2212
2216
2214

FIG. 50

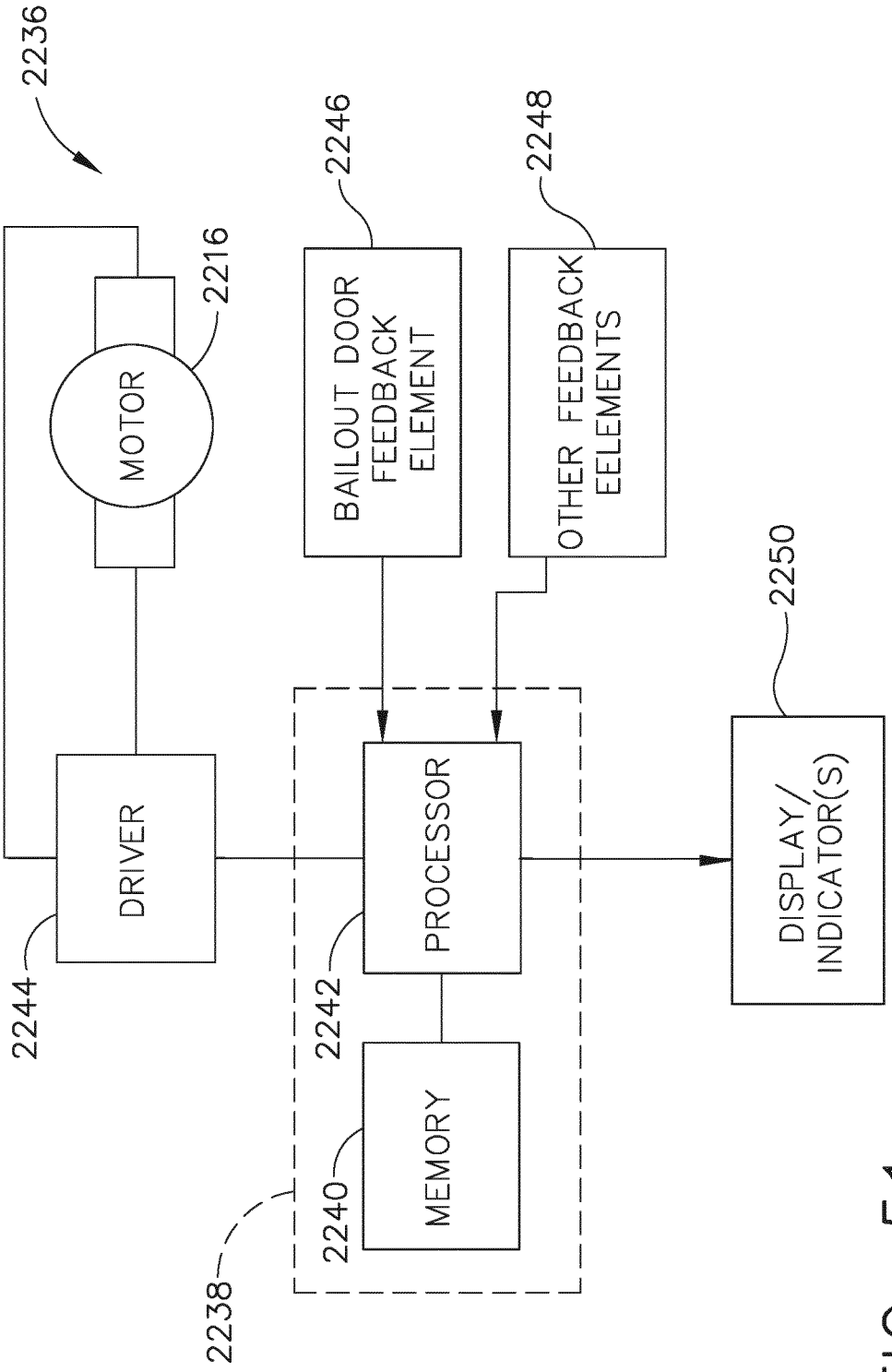
2236
2216
MOTOR
2246
BAILOUT DOOR FEEDBACK ELEMENT
2248
OTHER FEEDBACK EELEMENTS
2250
DISPLAY/ INDICATOR(S)
DRIVER
2244
PROCESSOR
2242
MEMORY
2240
2238

FIG. 51

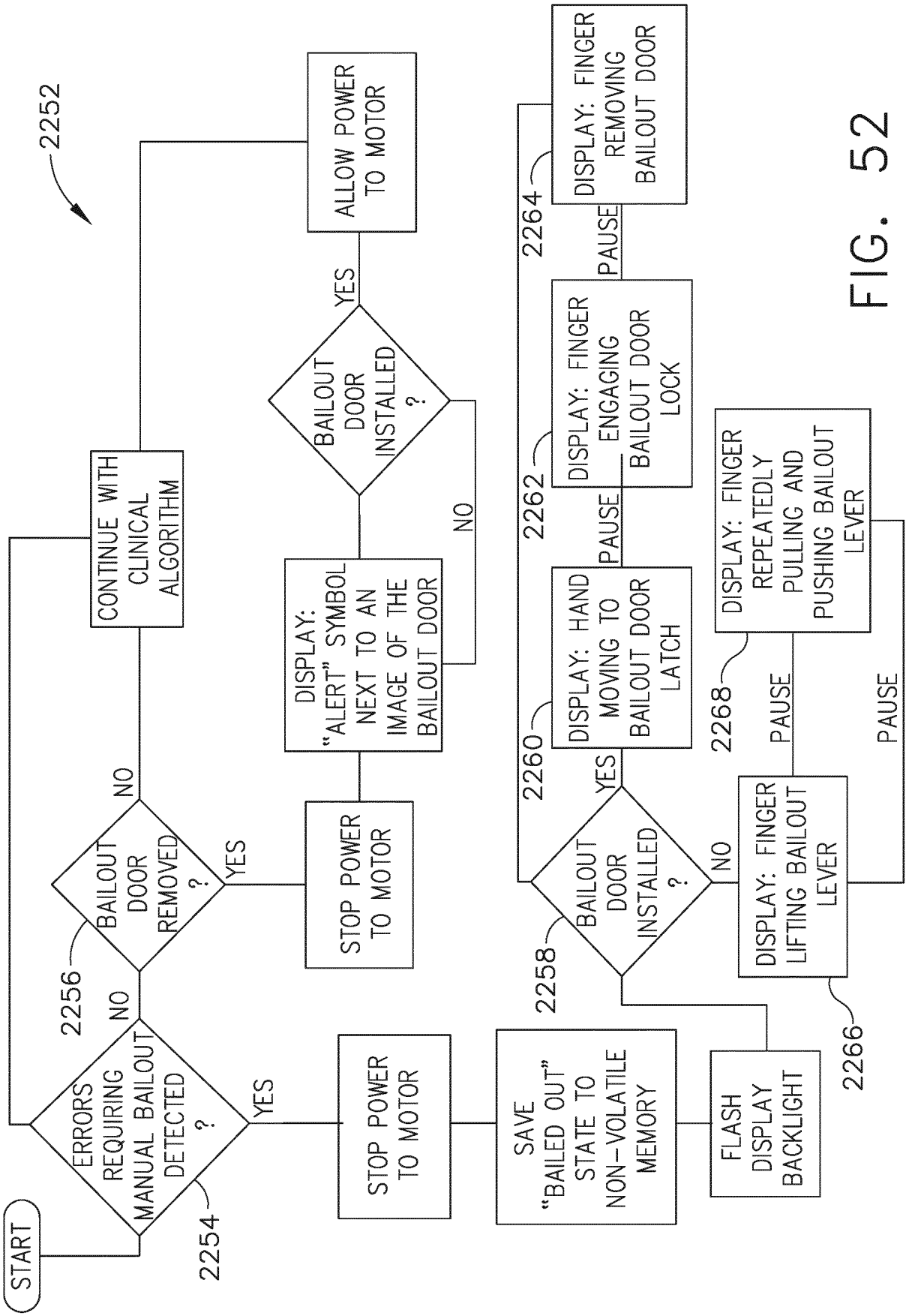
2252
START
ERRORS REQUIRING MANUAL BAILOUT DETECTED ?
2254
NO
YES
BAILOUT DOOR REMOVED ?
2256
NO
YES
CONTINUE WITH CLINICAL ALGORITHM
STOP POWER TO MOTOR
DISPLAY: "ALERT" SYMBOL NEXT TO AN IMAGE OF THE BAILOUT DOOR
BAILOUT DOOR INSTALLED ?
YES
NO
ALLOW POWER TO MOTOR
STOP POWER TO MOTOR
SAVE "BAILED OUT" STATE TO NON-VOLATILE MEMORY
FLASH DISPLAY BACKLIGHT
BAILOUT DOOR INSTALLED ?
2258
YES
NO
DISPLAY: HAND MOVING TO BAILOUT DOOR LATCH
2260
PAUSE
DISPLAY: FINGER ENGAGING BAILOUT DOOR LOCK
2262
PAUSE
DISPLAY: FINGER REMOVING BAILOUT DOOR
2264
PAUSE
DISPLAY: FINGER LIFTING BAILOUT LEVER
2266
PAUSE
DISPLAY: FINGER REPEATEDLY PULLING AND PUSHING BAILOUT LEVER
2268
PAUSE

FIG. 52

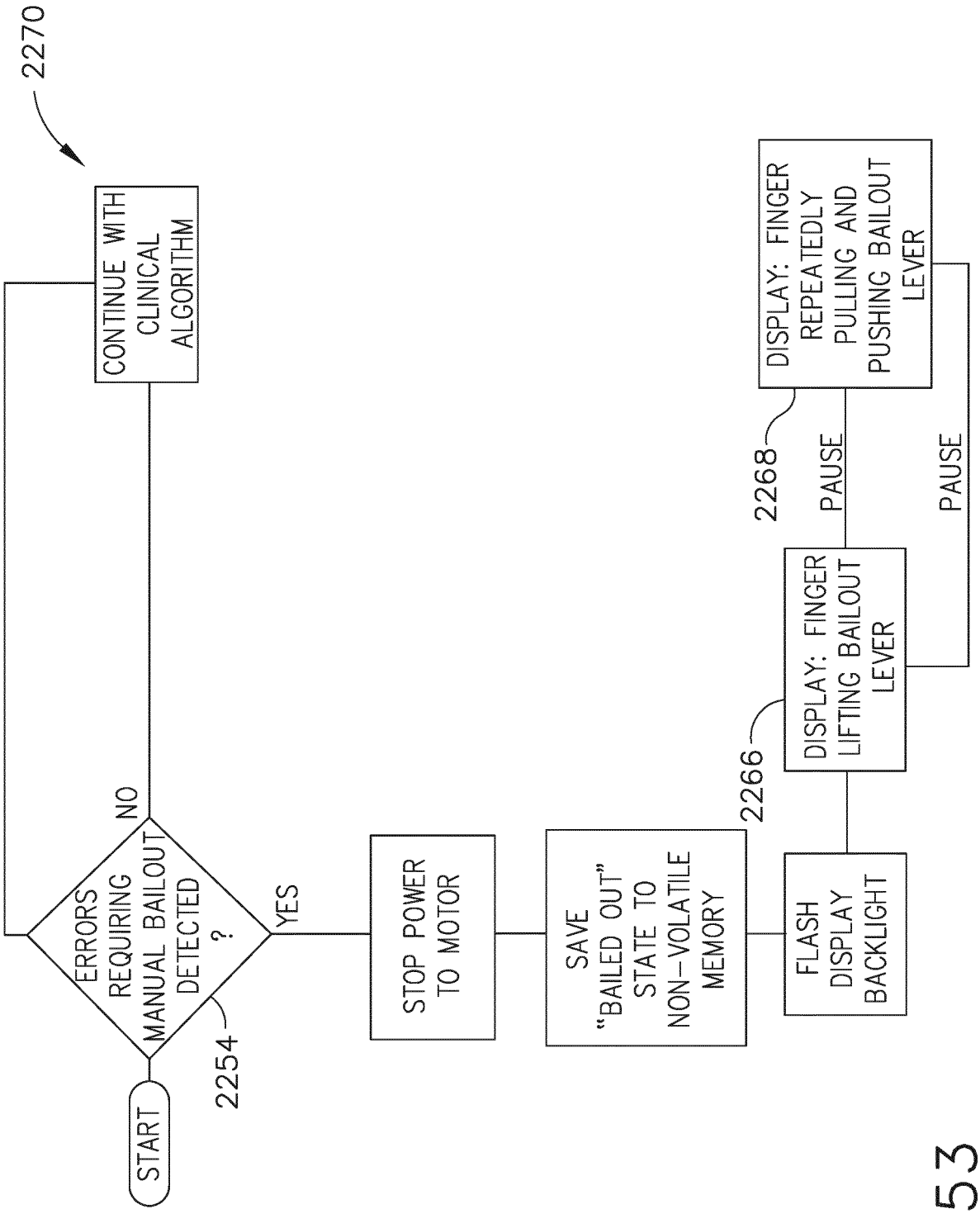
2270
START
ERRORS REQUIRING MANUAL BAILOUT DETECTED ?
2254
NO
YES
CONTINUE WITH CLINICAL ALGORITHM
STOP POWER TO MOTOR
SAVE "BAILED OUT" STATE TO NON-VOLATILE MEMORY
FLASH DISPLAY BACKLIGHT
2266
DISPLAY: FINGER LIFTING BAILOUT LEVER
PAUSE
2268
DISPLAY: FINGER REPEATEDLY PULLING AND PUSHING BAILOUT LEVER
PAUSE

FIG. 53

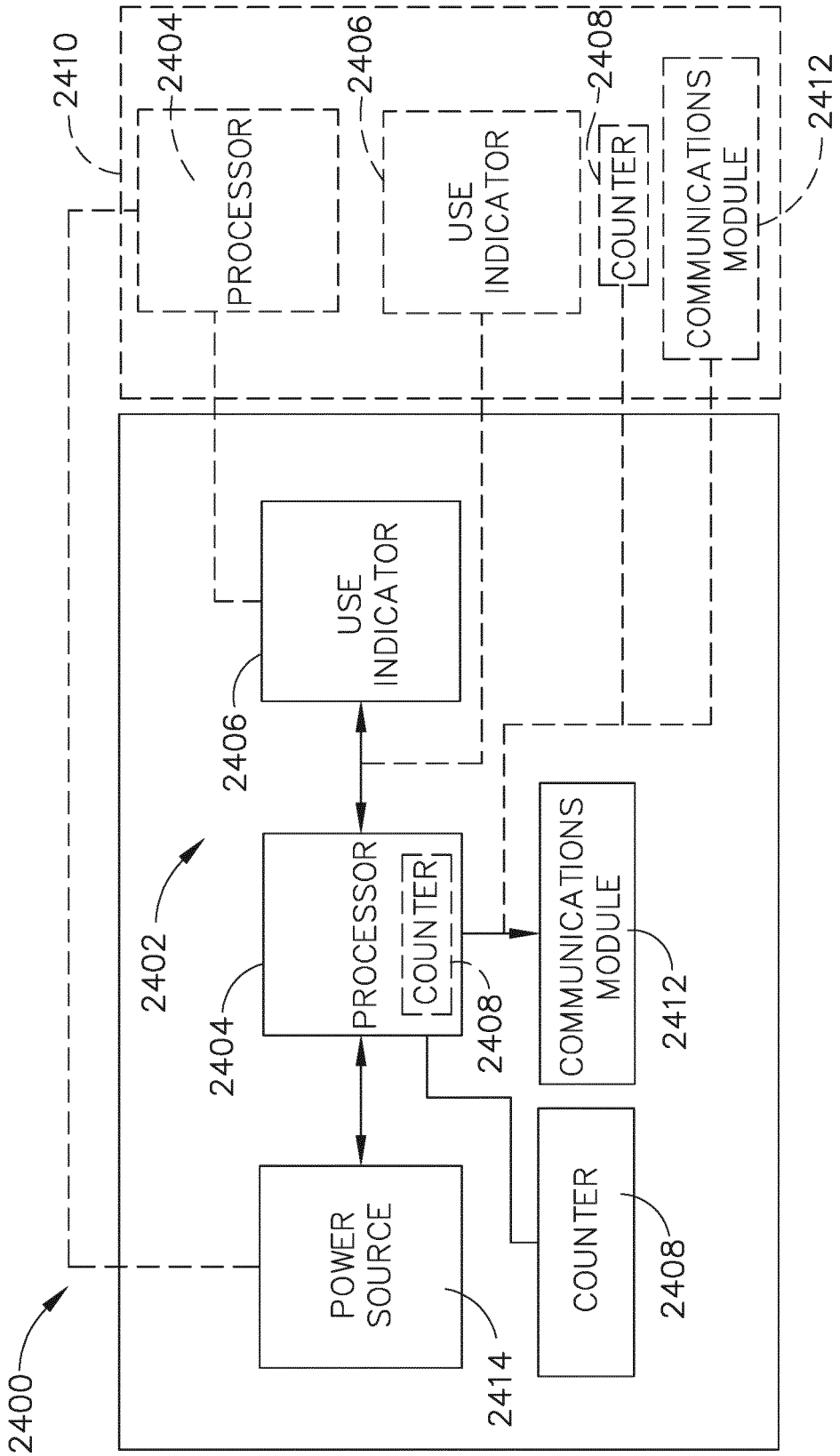
2410
2404
PROCESSOR
2406
USE INDICATOR
2408
COUNTER
COMMUNICATIONS MODULE
2412
USE INDICATOR
2406
2402
PROCESSOR
COUNTER
2404
2408
COMMUNICATIONS MODULE
2412
POWER SOURCE
2414
COUNTER
2408
2400

FIG. 54

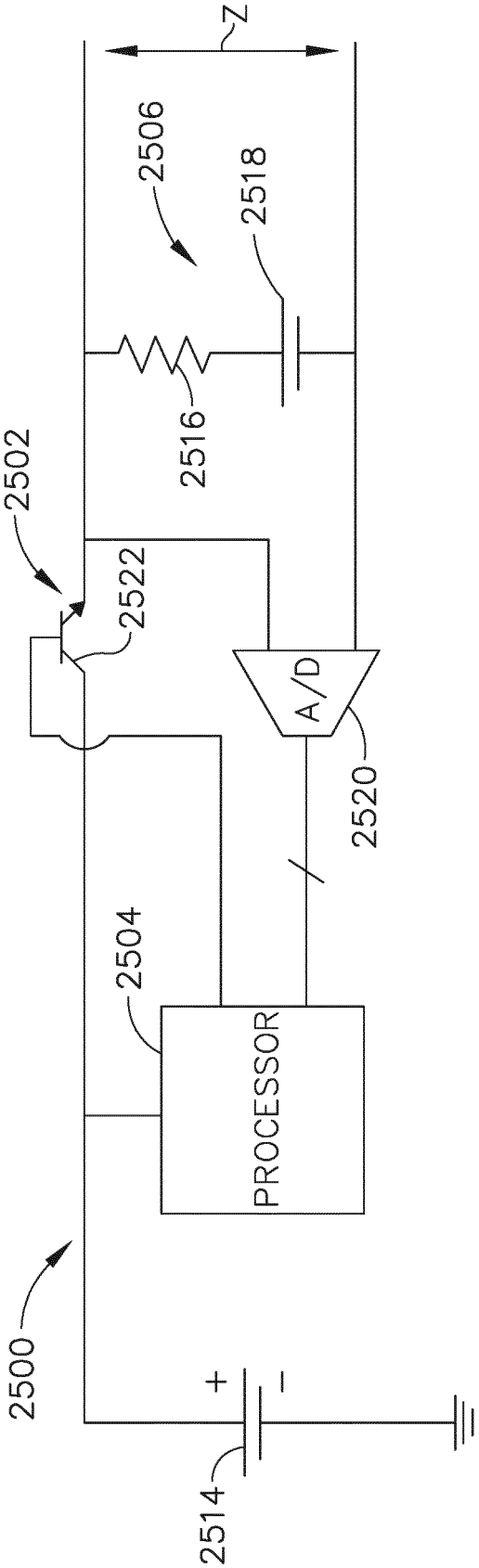

FIG. 55

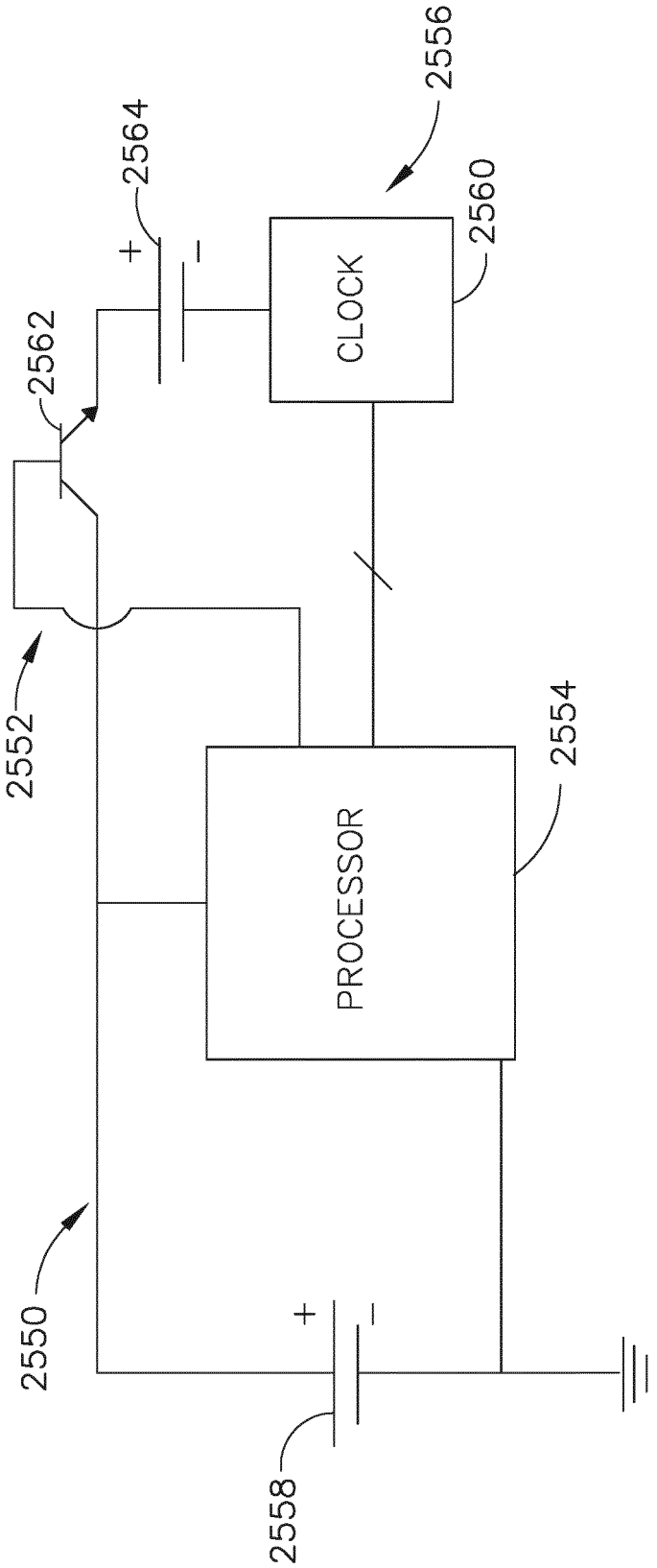

FIG. 56

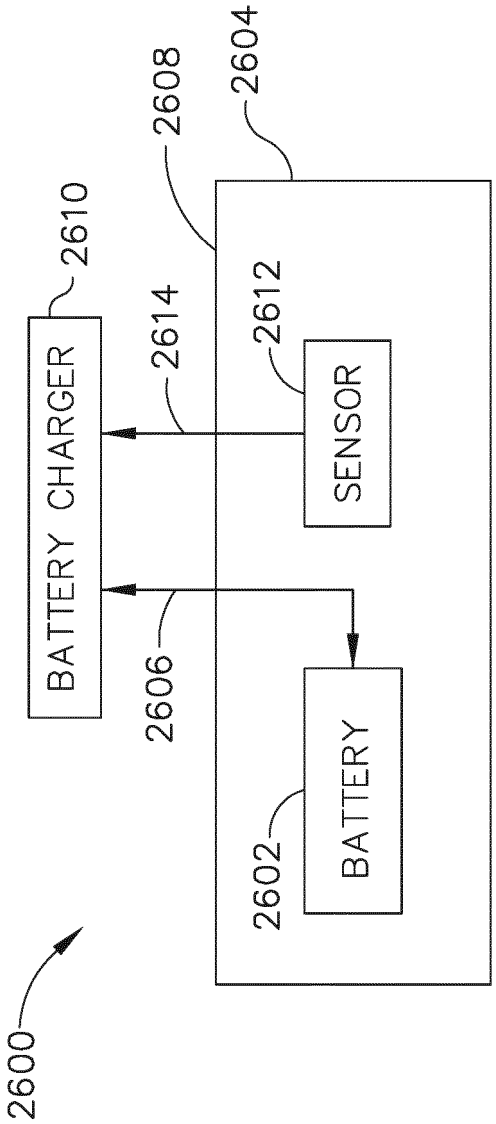
2600
BATTERY CHARGER
2610
2606
2614
2608
2604
2612
SENSOR
2602
BATTERY

FIG. 57

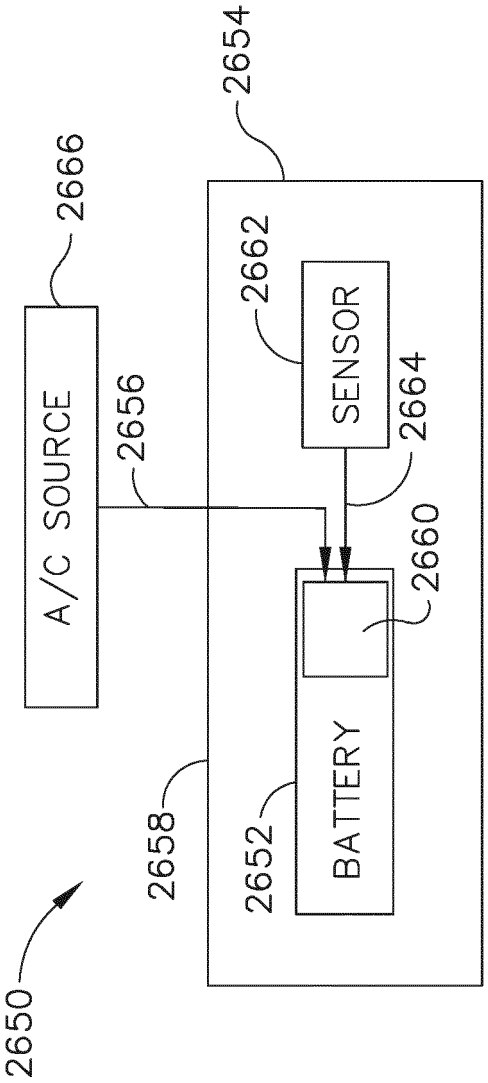
2650
2658
2652
BATTERY
2660
2656
A/C SOURCE
2664
2662
SENSOR
2666
2654

FIG. 58

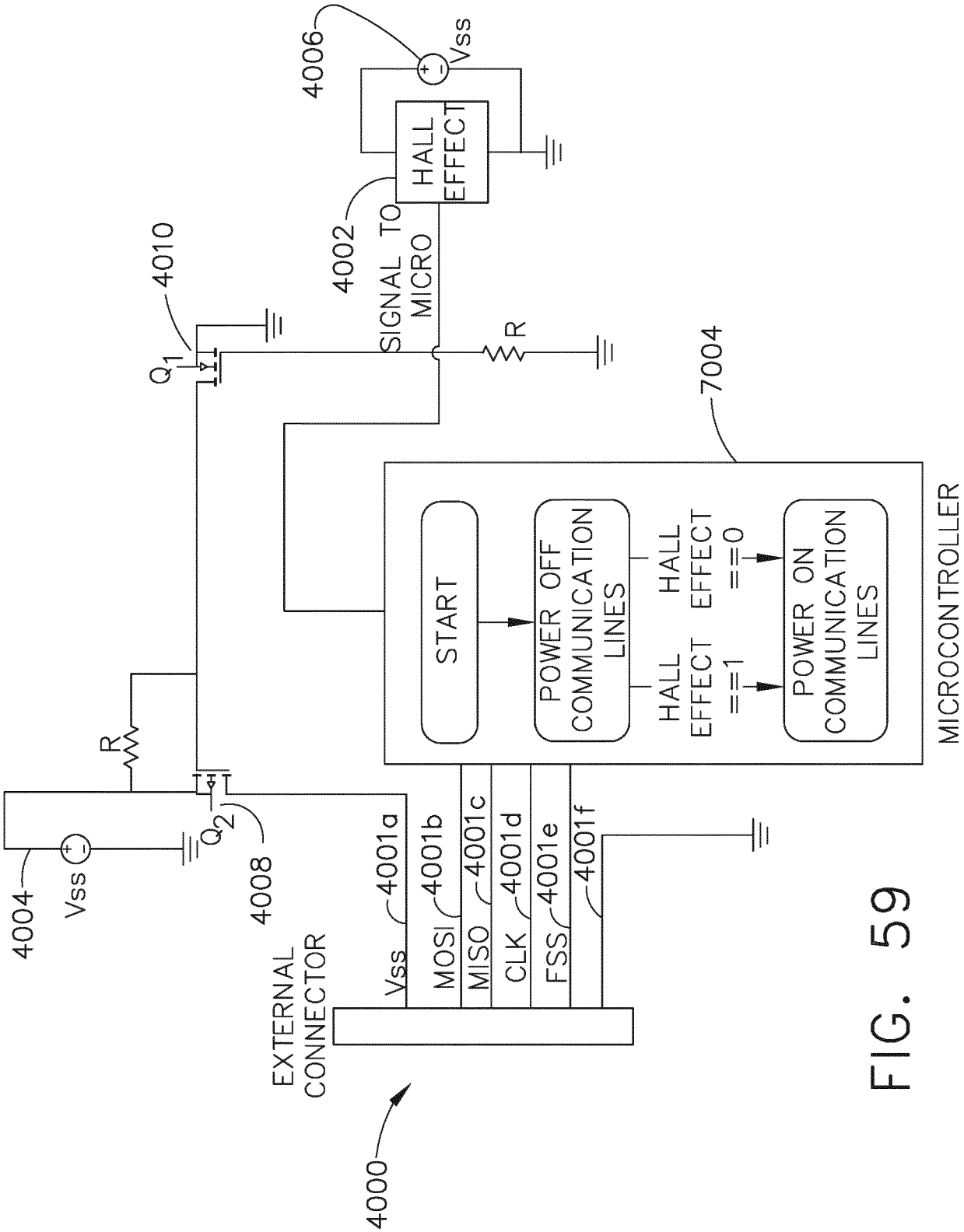
4006
Vss
HALL EFFECT
4002
SIGNAL TO MICRO
4010
Q1
R
7004
START
POWER OFF COMMUNICATION LINES
HALL EFFECT ==0
HALL EFFECT ==1
POWER ON COMMUNICATION LINES
MICROCONTROLLER
R
Q2
4008
4004
Vss
4001a
Vss
4001b
MOSI
4001c
MISO
4001d
CLK
4001e
FSS
4001f
EXTERNAL CONNECTOR
4000

FIG. 59

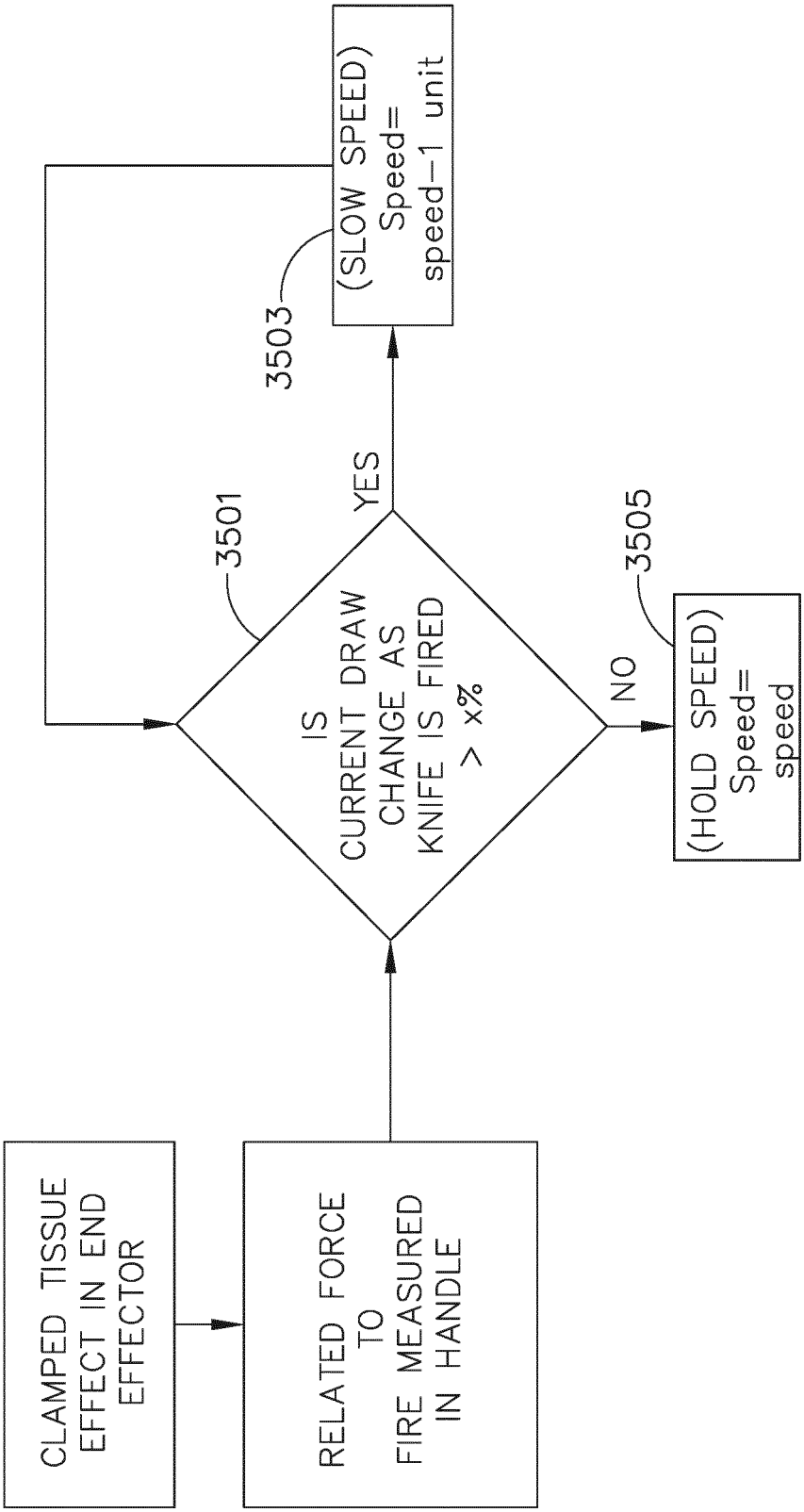
CLAMPED TISSUE EFFECT IN END EFFECTOR
RELATED FORCE TO FIRE MEASURED IN HANDLE
3501
IS CURRENT DRAW CHANGE AS KNIFE IS FIRED > x%
YES
NO
3503
(SLOW SPEED) Speed= speed−1 unit
3505
(HOLD SPEED) Speed= speed

FIG. 60

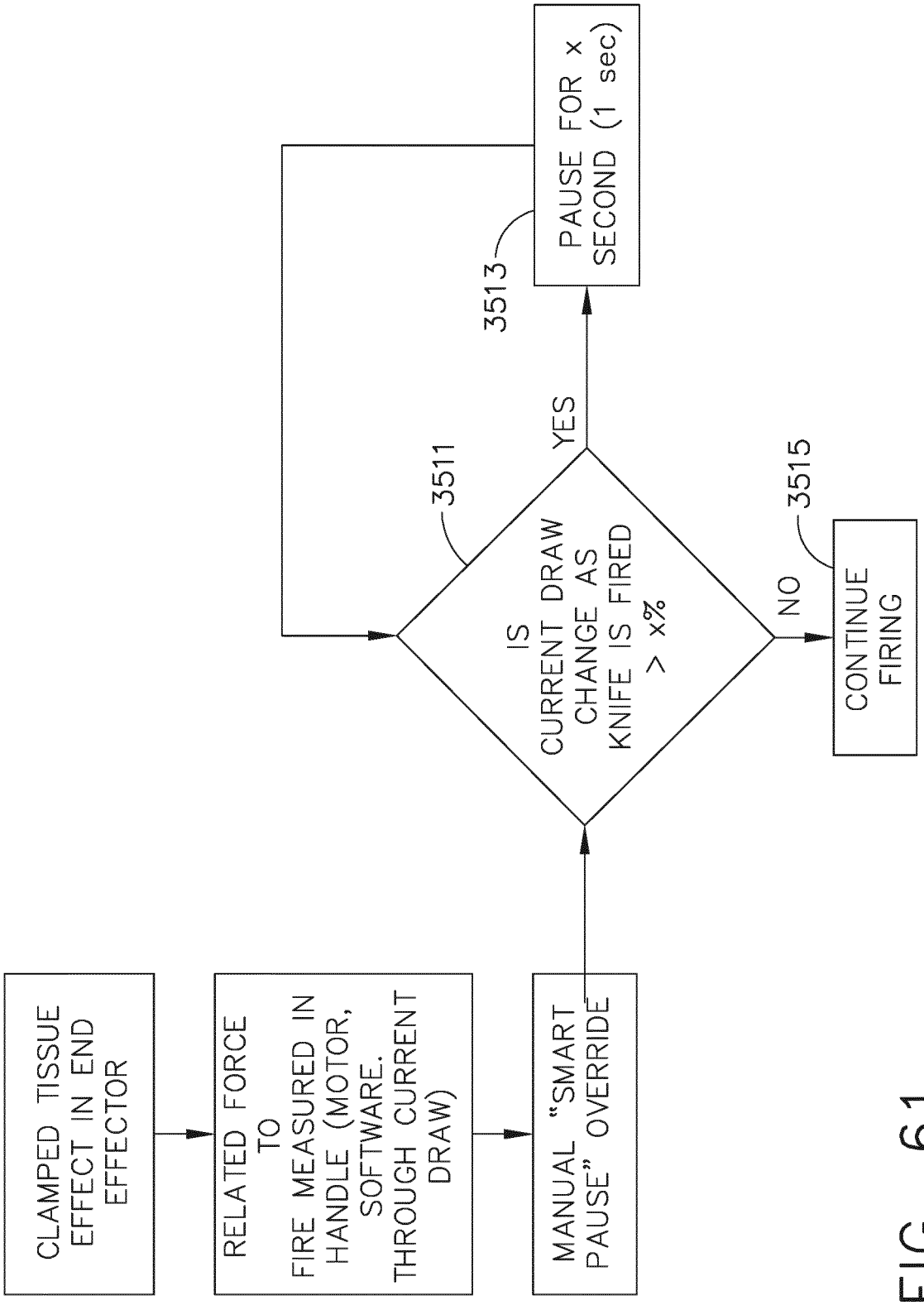
CLAMPED TISSUE EFFECT IN END EFFECTOR
RELATED FORCE TO FIRE MEASURED IN HANDLE (MOTOR, SOFTWARE. THROUGH CURRENT DRAW)
MANUAL "SMART PAUSE" OVERRIDE
3511
IS CURRENT DRAW CHANGE AS KNIFE IS FIRED > x%
YES
NO
3513
PAUSE FOR x SECOND (1 sec)
3515
CONTINUE FIRING

FIG. 61

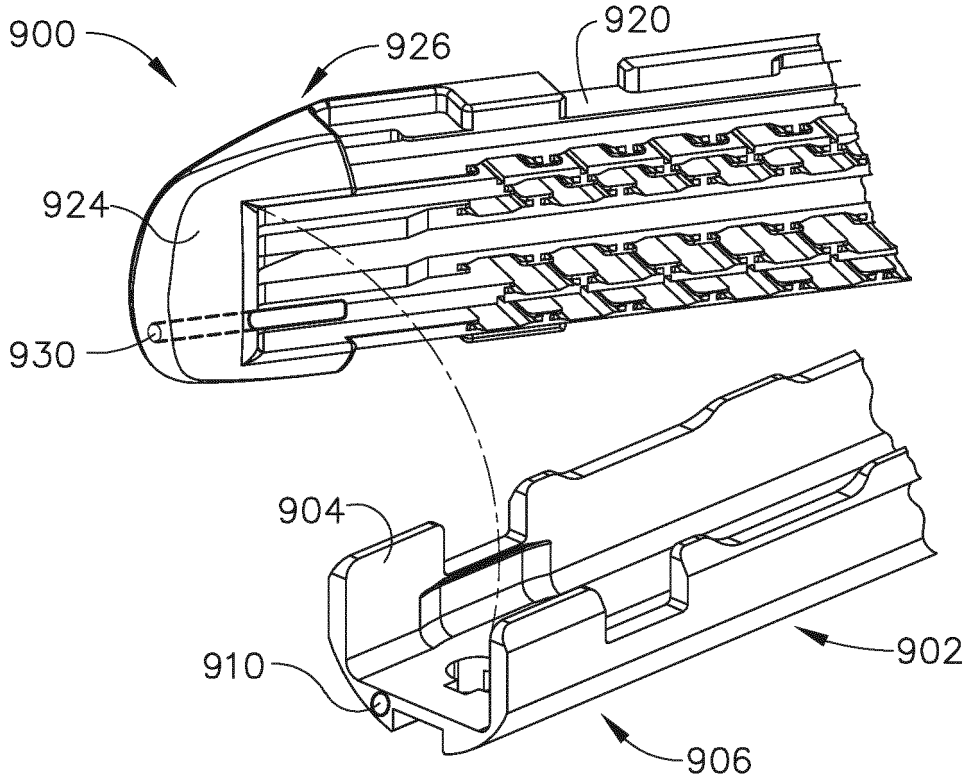
900
926
920
924
930
904
910
902
906

FIG. 62

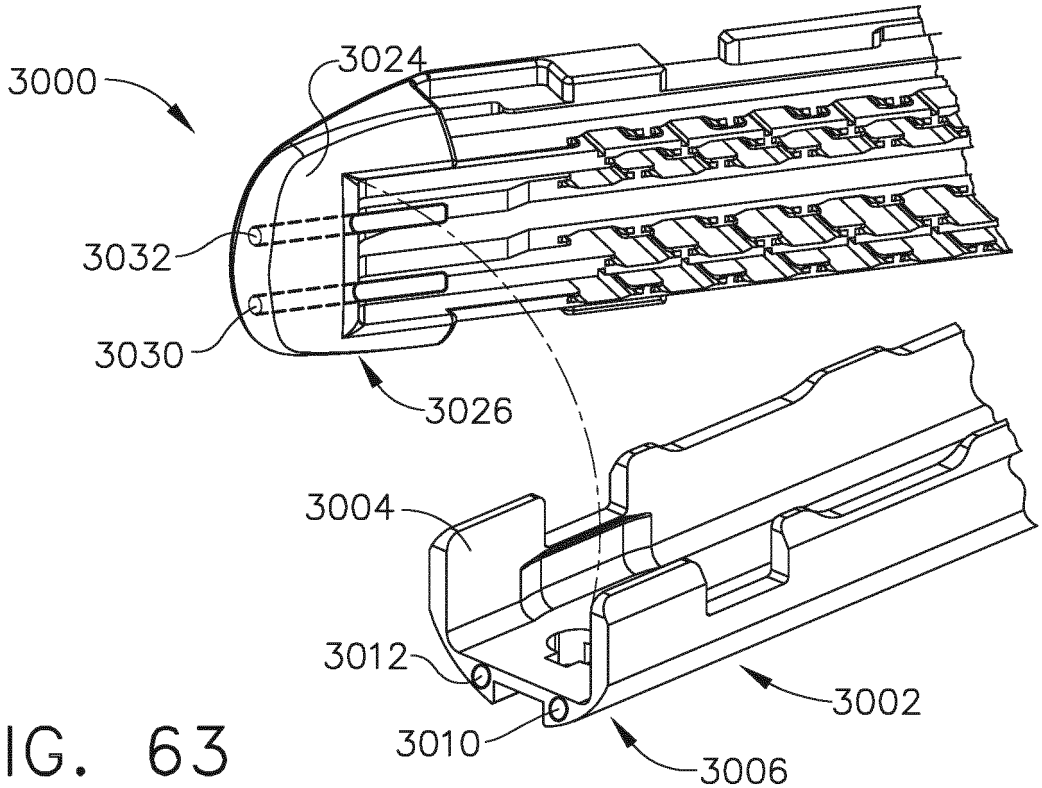
3000
3024
3032
3030
3026
3004
3012
3010
3002
3006

FIG. 63

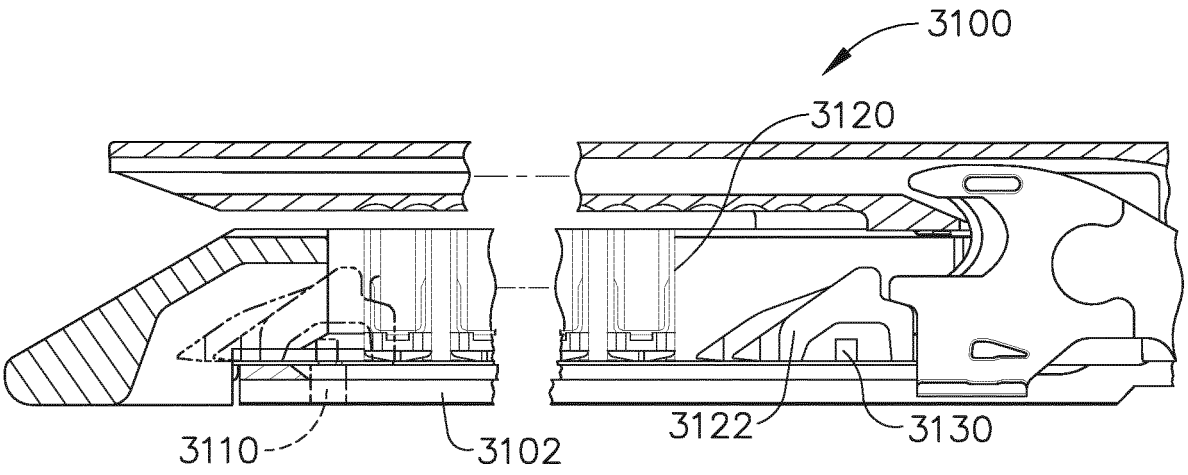

FIG. 64

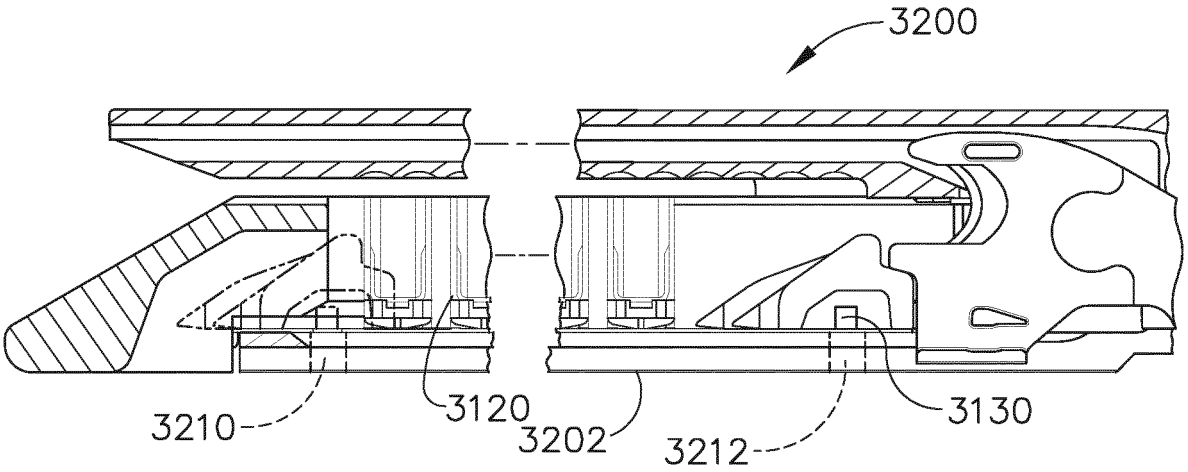

FIG. 65

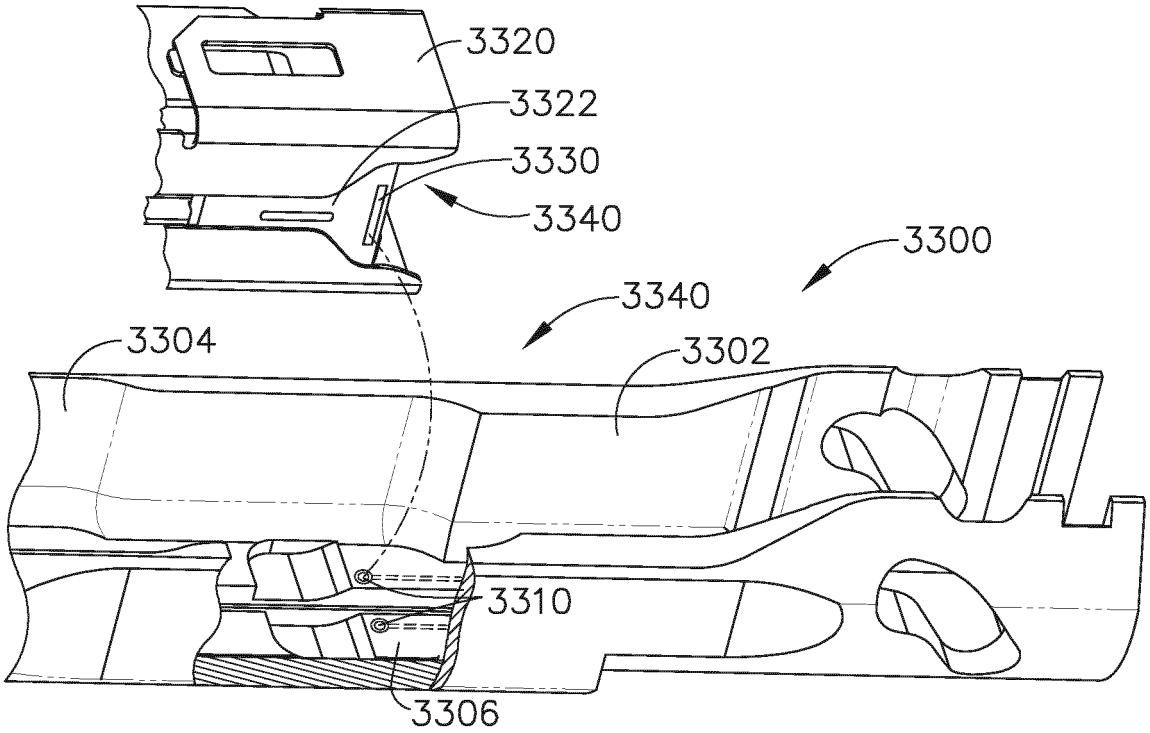
3320
3322
3330
3340
3300
3340
3304
3302
3310
3306

FIG. 66

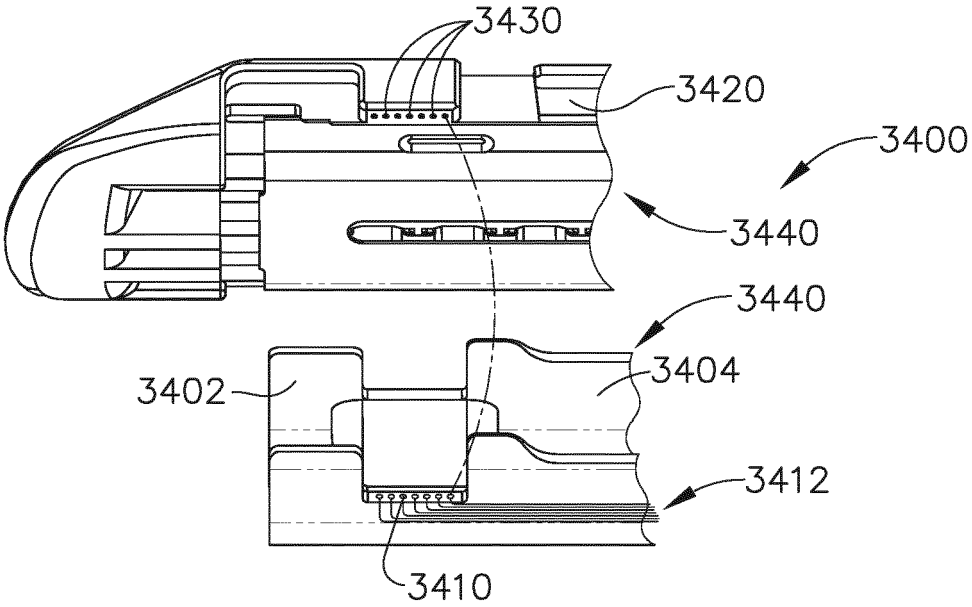
3430
3420
3400
3440
3440
3404
3402
3412
3410

FIG. 67

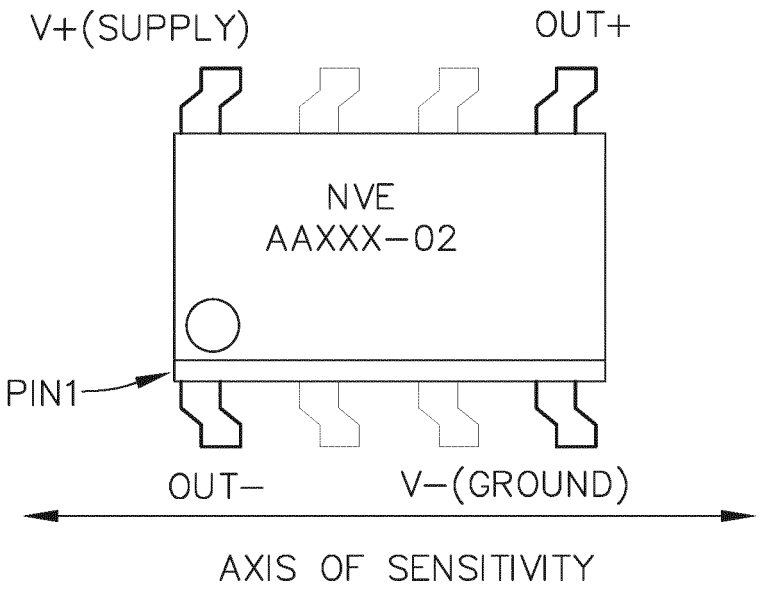

FIG. 68A

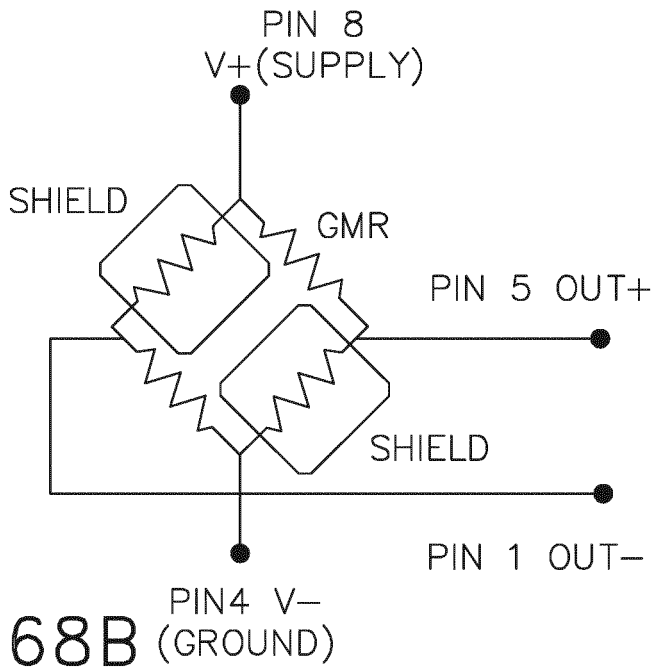

FIG. 68B

PART NUMBER	SATURATION FIELD (Oe[1])	LINEAR RANGE (|Oe[1]|)		SENSITIVITY (mV/V–Oe[1])		RESISTANCE (Ohms)	PACKAGE[2]	DIE SIZE[3] (μm)
		Min	Max	Min	Max			
AAL002–02	15	1.5	10.5	3.0	4.2	5.5K±20%	SOIC8	436x3370

FIG. 68C

REFERENCES CITED IN THE DESCRIPTION

This list of references cited by the applicant is for the reader's convenience only. It does not form part of the European patent document. Even though great care has been taken in compiling the references, errors or omissions cannot be excluded and the EPO disclaims all liability in this regard.

Patent documents cited in the description

- WO 9414129 A1 **[0001]**
- EP 2484304 A2 **[0001]**
- US 499697 A **[0001]**
- US 118241 **[0005] [0065] [0111]**
- US 20120298719 A **[0005]**
- US 20100089970 A **[0015]**
- US 80308613 **[0016] [0018]**
- US 803086 **[0016] [0019] [0020] [0024] [0025] [0032] [0060]**
- US 803086 A **[0021]**
- US 80006713 **[0025]**
- US 80002513 **[0025]**
- US 5403312 A **[0063] [0109]**
- US 03157308 **[0063] [0109]**
- US 61782866 **[0064] [0068] [0071] [0081] [0082] [0091] [0110]**
- US 20120298719 **[0065] [0111]**
- US 249117 **[0115]**
- US 20100089970 **[0115]**
- US 8210411 B **[0171]**