(19) Europäisches Patentamt
European Patent Office
Office européen des brevets

(11) EP 2 980 001 B1

(12) **EUROPEAN PATENT SPECIFICATION**

(45) Date of publication and mention of the grant of the patent:
18.07.2018 Bulletin 2018/29

(21) Application number: **14774591.3**

(22) Date of filing: **29.01.2014**

(51) Int Cl.:
B66C 13/16 *(2006.01)* ***B66C 15/00*** *(2006.01)*

(86) International application number:
PCT/JP2014/051883

(87) International publication number:
WO 2014/156279 (02.10.2014 Gazette 2014/40)

(54) **HOIST LIFE CALCULATING DEVICE**

VORRICHTUNG ZUR KALKULATION DER LEBENSDAUER EINER AUFZUGSWINDE

DISPOSITIF DE CALCUL DE DURÉE DE VIE DE TREUIL

(84) Designated Contracting States:
AL AT BE BG CH CY CZ DE DK EE ES FI FR GB GR HR HU IE IS IT LI LT LU LV MC MK MT NL NO PL PT RO RS SE SI SK SM TR

(30) Priority: **29.03.2013 JP 2013070982**

(43) Date of publication of application:
03.02.2016 Bulletin 2016/05

(60) Divisional application:
18166581.1

(73) Proprietor: **Hitachi Industrial Equipment Systems Co., Ltd.**
Chiyoda-ku
Tokyo 101-0022 (JP)

(72) Inventor: **OIKAWA, Yugo**
Tokyo 101-0022 (JP)

(74) Representative: **Addiss, John William et al**
Mewburn Ellis LLP
City Tower
40 Basinghall Street
London EC2V 5DE (GB)

(56) References cited:
GB-A- 2 090 416
JP-A- H11 246 184
JP-A- 2010 180 001
JP-A- 2011 105 470
JP-A- 2012 111 617

Note: Within nine months of the publication of the mention of the grant of the European patent in the European Patent Bulletin, any person may give notice to the European Patent Office of opposition to that patent, in accordance with the Implementing Regulations. Notice of opposition shall not be deemed to have been filed until the opposition fee has been paid. (Art. 99(1) European Patent Convention).

Printed by Jouve, 75001 PARIS (FR)

Description

TECHNICAL FIELD

[0001] The present invention relates to a hoist life calculating device.

BACKGROUND ART

[0002] As a background art of the technical field, there is JP 2010-180001 A (Patent Literature 1). In this publication, it is disclosed that "provided are a crane operating situation managing device and a crane having the same, capable of obtaining information necessary to precisely estimate a life of a crane according to operation situations considering a loading rate, an operation cycle, and an operating time thereof'.

CITATION LIST

PATENT LITERATURE

[0003] PATENT LITERATURE 1: JP 2010-180001 A

SUMMARY OF INVENTION

TECHNICAL PROBLEM

[0004] In PATENT LITERATURE 1, there is a description about the measurement of an operation cycle of a hoist necessary to estimate a life of the hoist. However, in PATENT LITERATURE 1, "a configuration of counting both of the number of ground cutting times and the number of lifting operation times" is disclosed, but the number of lowering operation times is not counted. For this reason, it is difficult to estimate the life of the hoist with high precision.

[0005] In addition, in PATENT LITERATURE 1, only the number of operation times and the operating time for each load are measured, but a pausing time is not measure. For this reason, it is difficult to accurately measure a ratio of the operating time and the pausing time (that is, a use frequency) as one of measured values for comprehensively determining the life of the hoist.

[0006] Considering the problems described above, an object of the invention is to provide a hoist life calculating device capable of estimating a life of a hoist with high precision.

SOLUTION TO PROBLEM

[0007] According to the present invention, there is provided a hoist life calculating device according to claim 1.

[0008] The hoist life calculating device may optionally be as specified in claim 2.

ADVANTAGEOUS EFFECTS OF INVENTION

[0009] According to the invention, it is possible to provide a hoist life calculating device capable of estimating a life of a hoist with high precision.

[0010] Problems, configurations, and effects other than the above description are clarified by the following description of embodiments.

BRIEF DESCRIPTION OF DRAWINGS

[0011]

FIG. 1 is an example of a diagram illustrating a configuration of a hoist life calculating device.
FIG. 2 is an example of a perspective view illustrating an overall configuration of an inverter crane apparatus.
FIG. 3 is an example of a block diagram illustrating a configuration of a main part of an inverter crane apparatus.
FIG. 4 is an example of a flowchart illustrating a process at a timing of start.
FIG. 5 is an example of a flowchart illustrating a process of a load determining unit.
FIG. 6 is an example of a flowchart illustrating a process of an operating time measuring unit.
FIG. 7 is an example of a flowchart illustrating a process of an operation cycle measuring unit.
FIG. 8 is an example of a flowchart illustrating a process of a loading time rate measuring unit.

FIG. 9 is an example of a method of an operating time reserving process.
FIG. 10 is an example of displaying by a PC or the like.
FIG. 11 is an example of a configuration of a display relation of a hoist and transverse inverter controlling unit.
FIG. 12 is an example of displaying by a hoist and transverse inverter controlling unit.
FIG. 13 is an example of a load determination value according to output frequencies.
FIG. 14 is an example of a load determination value according to output frequencies.

DESCRIPTION OF EMBODIMENTS

[0012] Hereinafter, embodiments will be described with reference to the drawings.

[0013] FIG. 1 is an example of a diagram illustrating a configuration of a hoist life calculating device. FIG. 2 is a perspective view illustrating an overall configuration of an inverter crane apparatus provided with a hoist life calculating device according to this embodiment, and FIG. 3 is a block diagram illustrating a configuration of a main part of an inverter crane apparatus.

[0014] First, an outline of a hoist life calculating device and operations related to a hoist will be described with reference to FIG. 1. A controlling unit of the hoist operates a motor that is a driving unit by an operation instruction input from an input device, and controls a brake close to the motor to be open, thereby driving the hoist. Data of operation situations of the motor is transmitted to the controlling unit, and the controlling unit performs a display control on a displaying unit to display information of a list of operation situations corresponding to a content of the operation. In addition, the list displayed by the displaying unit may be printed.

[0015] Next, an overall configuration of the inverter crane apparatus will be described with reference to FIG. 2.

[0016] An inverter crane apparatus 100 includes a crane hook 1, a wire rope 2, a hoist induction motor 3, a hoist 4, a transverse induction motor 5, a transverse device 6, a transverse girder 7, a traveling induction motor 8, a traveling device 9, a traveling girder 10, a hoist and transverse inverter device (referred to as a main controlling unit) 11, a hoist and transverse inverter controlling unit 12 to be described later, an operation input device 13, a hoist inverter 14 to be described later, a transverse inverter 15 to be described later, an induction motor brake 16 to be described later, a traveling inverter device 17, a traveling inverter controlling unit 18 to be described later, and a traveling inverter 19 to be described later.

[0017] The inverter crane apparatus 100 moves a load suspended from the crane hook 1 in a Z direction (indicated by arrows in a Z direction and a -Z direction), that is, a vertical direction, by lifting and lowering the wire rope 2 by the hoist 4 provided with the hoist induction motor 3. In addition, with respect to an X direction (indicated by arrows in an X direction and a -X direction), the load is moved in the X direction by the transverse girder 7 and the transverse device 6 provided with transverse induction motor 5. In addition, with respect to a Y direction (indicated by arrows in a Y direction and a -Y direction), the load is moved in the Y direction by the traveling girder 10 and the traveling device 9 provided with the traveling induction motor 8.

[0018] Next, a control configuration of the inverter crane apparatus will be described with reference to FIG. 3.

[0019] The hoist induction motor 3 and the transverse induction motor 5 are controlled by the hoist and transverse inverter controlling unit 12 illustrated in FIG. 3 provided in the hoist and transverse inverter device 11. That is, when an operator inputs a predetermined instruction from the operation input device 13, the hoist and transverse inverter controlling unit 12 controls the hoist inverter 14 and the transverse inverter 15 to apply frequency, voltage, and current necessary for the control from the hoist inverter 14 and the transverse inverter 15 to the hoist induction motor 3 and the transverse induction motor 5 and to control the induction motor brake 16 to be open at the same time, thereby moving the load suspended from the crane hook 1 in the Z direction without falling down. The transverse device 6 moves the hoist 4 in the X direction along the transverse girder 7.

[0020] Similarly, as for the traveling induction motor 8 suspended from the traveling device 9, when the operator inputs a predetermined instruction from the operation input device 13, the traveling inverter controlling unit 18 illustrated in FIG. 3 provided in the traveling inverter device 17 controls the traveling inverter 19 to apply frequency, voltage, and current necessary for the control from the traveling inverter 19 to the traveling induction motor 8 and to control the induction motor brake 16 to be open at the same time, thereby moving the hoist 4 in the Y direction along the traveling girder 10.

[0021] In addition, the hoist inverter 14 includes a current measuring unit 20. The current measuring unit 20 measures a current value for driving the hoist induction motor 3.

[0022] In addition, the hoist and transverse inverter controlling unit 12 includes a load converting unit 21. The load converting unit 21 converts the current value data measured by the current measuring unit 20 into load data by a predetermined calculation. That is, since the current value for driving the hoist induction motor 3 is changed according to a weight of the load suspended from the crane hook 1, it is possible to measure the load by converting the current value into the load data by the load converting unit 21. For example, as the load gets heavier, the current value for driving the hoist induction motor 3 gets larger, and as the load gets lighter, the current value for driving the hoist induction motor 3 gets smaller.

[0023] In addition, the hoist and transverse inverter controlling unit 12 includes a slippage measuring unit 22. The slippage measuring unit 22 converts a signal from an encoder 23, which outputs a pulse signal corresponding to a rotation situation of the hoist induction motor 3, into the number of rotations, and measures a slippage amount that is a difference between the number of synchronous rotations calculated from an operation frequency and the measured actual number of rotations. That is, since the slippage amount is changed according to the weight of the load suspended from the crane hook 1, it is possible to measure the load by converting the slippage amount into the load data by the load converting unit 21. For example, as the load gets heavier, the slippage amount of the hoist induction motor 3 gets larger, and as the load gets lighter, the slippage amount of the hoist induction motor 3 gets smaller.

[0024] The inverter control may be performed to operate in an operation frequency lower than a rated speed, but in this case, the change amount of the current value changed according to the weight of the load is small particularly in a lowering direction, it is thus difficult to perform determination with high precision, but it is possible to perform determination of the load with high precision in addition to the load determination of the current value by having means for determining the load based on the slippage amount.

[0025] The load detected as described above may be used in a process as it is, but the amount of data is huge. In the embodiment, a rated load (100%) of the hoist is classified into five patterns of no load (0%), a light load (1 to 25%), a medium load (26 to 50%), a heavy load (51 to 75%), and a superheavy load (76% or more), which are used in a process.

[0026] In addition, it is obvious that a relation between a current value and load data or a relation between a slippage amount and load data can be easily acquired experimentally in advance or by a predetermined calculation.

[0027] A specific load determining method of the load converting unit 21 will be described with reference to FIGS. 4 and 5. FIG. 4 is a flowchart illustrating a load determining process at a timing of start, and FIG. 5 is a flowchart illustrating a load determining process.

[0028] As for the start of the load determining process, for example, in a software interrupting process for each 100 ms, when the induction motor brake 16 is open (S1), the load determining process is started (S4).

[0029] In the load determining process, when the hoist is in an acceleration or deceleration state, it is difficult to measure the current value and the slippage amount with high precision, and thus it is necessary to measure the current value and the slippage amount at a constant speed. As illustrated in FIG. 4, when there is an operation instruction in an "upper" or "lower" direction (S101), as for the frequency output from the hoist inverter 14 to the hoist induction motor 3, a target frequency instructed by the hoist and transverse inverter controlling unit 12 is compared with an output frequency actually output from the hoist inverter 14 (S102). When the instructed frequency is the same as the output frequency or when the output frequency is higher than the instructed frequency, it is in a constant speed state, and the current value and the slippage amount are acquired (S103).

[0030] When the condition is not satisfied, the load determining process returns to the initial state, and the process is ended (S109).

[0031] In addition, the detection is always performed on the current value and the slippage amount regardless of the hoist state such as acceleration or deceleration.

[0032] The current values and the slippage amounts by the set number of acquisition times are acquired (S104) and, when the acquiring of the current values and the slippage amounts is completed, an average value is calculated (S105) after the acquired value is reserved, for example, five times (S10) to suppress a variation among the acquired values.

[0033] When each average value of the current values and the slippage amounts is calculated, a total sum of the acquired values and the counted number of acquisition times are cleared (S106). A value of the output frequency output from the hoist inverter 14 is compared with a reference value (for example, 30 Hz) of the set output frequency (S107). In a case where the value is equal to or less than the reference value, the slippage amount is used as a parameter of load determination, and a load class is determined from the average slippage amount and the operation direction (S108). Meanwhile, in a case where the value is larger than the reference value, the current value is used as a parameter of load determination, and the load class is determined from the average current value and the operation direction (112).

[0034] In addition, since the current value and the slippage amount are changed according to the operation direction (Z direction) of the hoist, it is necessary to also determine the operation direction from the parameter of the load determination, but it is possible to know the operation direction when the input from the operation input device 13 to the hoist and transverse inverter controlling unit 12 is confirmed.

[0035] Herein, instead of using any one of the current value and the slippage amount as the parameter of the load determination by the output frequency, both of them may be used as the parameters of the load determination.

[0036] When the parameter for determining the load is prepared as described above, loads are classified into five patterns according to classification determined in advance as illustrated in FIGS. 13 and 14. For example, in a case where a current value of 11 A is detected in the operation in the upper direction at the output frequency 60 Hz, the load is determined as the medium load (S112).

[0037] Next, an operating time measuring process S5 illustrated in FIG. 4 will be described. As illustrated in FIG. 3, the hoist and transverse inverter controlling unit 12 includes an operating time measuring unit 24. The operating time measuring unit 24 measures and integrates an opening control time of the induction motor brake 16 controlled to be

open by the hoist and transverse inverter controlling unit 12. That is, total operating time is measured.

[0038] In addition, the operating time measuring unit 24 measures and integrates the opening control time of the induction motor brake 16 for each load classification determined by the load determining process. That is, the operating time for each load classification is measured.

[0039] A specific operating time measuring method of the operating time measuring unit 24 will be described with reference to FIGS. 4 and 6. FIG. 6 is a flowchart illustrating an operating time measuring process.

[0040] As for the start of the operating time measuring process, for example, in a software interrupting process for each 100 ms, when the induction motor brake 16 is open (S1), the load determining process (S4) is completed, and then the operating time measuring process is started (S5).

[0041] When the operating time measuring process is performed, first, the total operating time is counted up by 1 (S201). Then, the operating time for each load classification is counted up by 1 from the determined load classification (S206 to S210). As described above, it is possible to measure the total operating time and the operating time for each load classification.

[0042] In addition, it is obvious that the conversion from the number of integrated times of the operating time into an actual operating time is determined at the performing interval of the operating time measuring process.

[0043] Next, an operation cycle measuring process S6 illustrated in FIG. 4 will be described. As illustrated in FIG. 3, the hoist and transverse inverter controlling unit 12 includes an operation cycle measuring unit 25. The operation cycle measuring unit 25 integrates the number of times when the state of the induction motor brake 16 controlled to be open by the hoist and transverse inverter controlling unit 12 is open and then returns to the original state, for each determined load classification by the load determining process. That is, the number of operation times for each load classification is measured.

[0044] A specific operation cycle measuring method of the operation cycle measuring unit 25 will be described with reference to FIGS. 4 and 7. FIG. 7 is a flowchart illustrating an operation cycle measuring process.

[0045] As illustrated in FIG. 4, as for the start of the operation cycle measuring process, for example, in a software interrupting process for each 100 ms, when the induction motor brake 16 is open, a brake opening flag is set to 1 (S2), and when the induction motor brake 16 is braked, the brake opening flag is set to 0 (S3). After the operation of the brake opening flag is performed as described above, the operation cycle measuring process is started (S6).

[0046] As illustrated in FIG. 7, when the operation cycle measuring process is performed, first, the brake opening flag state is confirmed (S301), and the operation state of the brake is also confirmed together (S302). When the brake opening flag is 1 and the brake is in the braking state, the brake opening flag is set to 0 (S303).

[0047] When the brake opening flag is set to 0, the total number of operation times is counted up by 1 (S304). Then, from the determined load classification, the number of operation times for each load classification is counted up by 1 (S306 to S310). As described above, it is possible to measure the total number of operation times and the number of operation times for each load classification.

[0048] Next, a loading time rate measuring process S7 illustrated in FIG. 4 will be described. First, calculation of a remaining lifetime will be described. As illustrated in FIG. 3, in order to calculate the remaining lifetime of the hoist, the hoist and transverse inverter controlling unit 12 includes a remaining lifetime calculating unit 26. The remaining lifetime calculating unit 26 calculates the remaining lifetime from the operating time for each load classification.

[0049] A specific method of calculating the remaining lifetime of the hoist performed by the remaining lifetime calculating unit 26 will be described. As for the remaining lifetime of the hoist, first a loading rate is calculated on the basis of [MATH. 1].

[MATH. 1]

$$K = \sqrt[3]{\sum \left[\frac{t_i}{tr} (P)^3 \right]}$$

K: loading rate
ti: operating time for each load classification
tT: total operating time
ti/tT: time rate for each load classification
P: loading ratio (table 1, values of LO to L4)

[0050] As the operating time for each load classification and the total operating time in [MATH. 1] and the loading ratio, values illustrated in FIGS. 13 and 14 are used.

[0051] Then, the loading rate calculated by [MATH. 1] is divided by 0.63 that is a loading rate in a case where the

hoist is generally used, to calculate an equivalent loading rate from (MATH. 2).

(MATH. 2)

$$\text{Equivalent loading rate} = (\text{loading rate}/0.63)^3$$

[0052] Then, an equivalent operating time is calculated from (MATH. 3). Herein, the value measured as described above is used as the total operating time.

(MATH. 3)

$$\text{Equivalent operating time} = \text{total operating time} \times \text{equivalent loading rate}$$

[0053] As described above, when the equivalent operating time and the equivalent loading rate are determined, a remaining lifetime is calculated by (MATH. 4).

(MATH. 4)

$$\text{Remaining lifetime} = \text{set total operating time} \times \text{equivalent operating time}$$

[0054] Since the set total operating time in (MATH. 4) can be determined from specifications of the hoist, an initial value may be set in the remaining lifetime calculating unit 26. In addition, the set total operating time may be variable later.

[0055] Herein, the remaining lifetime is determined as described above, but a ratio of a pausing time and an operating time of the hoist (that is, a loading time rate) is necessary to comprehensively determine the remaining lifetime of the hoist. This is because the hoist induction motor 3, the hoist inverter 14, and the like are loaded in a case where the hoist is intensively operated for a short time.

[0056] In order to measure the loading time rate, the hoist and transverse inverter controlling unit 12 includes a loading time rate measuring unit 27. The loading time rate measuring unit 27 measures an opening control time of the induction motor brake 16 controlled to be open by the hoist and transverse inverter controlling unit 12 so as to determine the operating time and the pausing time, thereby calculating the loading time rate.

[0057] A specific method of measuring the loading time rate will be described with reference to FIGS. 4 and 8. FIG. 8 is a flowchart illustrating a loading time rate measuring process.

[0058] First, general calculation of the loading time rate will be described. The loading time rate is represented using a unit %ED representing an operating time (minutes) for 60 minutes. Since the operating time can be measured by confirming the operation state of the induction motor brake 16, the pausing time can be measured similarly by confirming the operation state of the induction motor brake 16.

[0059] As for the measuring of the loading time rate, as illustrated in FIG. 4, for example, in a software interrupting process for each 100 ms, the loading time rate measuring process is constantly performed without depending on the state of the induction motor brake 16 (S7).

[0060] When the loading time rate measuring process is performed, first, the operation state of the induction motor brake 16 is confirmed to determine whether operating or pausing (S401). During operating, 100 ms is added to the integrated operating time (S402).

[0061] Then, it is confirmed whether or not the sum of the integrated operating time and the integrated pausing time is 1 minute or more (S403). When it is less than 1 minute, the interrupting process of the loading time rate measuring is ended. When it is 1 minute or more, an operating time reserving process (S404) is performed.

[0062] Herein, the operating time reserving process (S404) will be described with reference to FIG. 9. In the operating time reserving process (S404), 60 reserving areas are provided in a storing unit 28 of the hoist and transverse inverter controlling unit 12 in order to reserve, for example, 60 past operating times each having 1 minute (that is, the operating time for past 60 minutes) ([1]). As the reserving areas, for example, the area for reserving the newest operating time is an area 1, the area for reserving the second newest operating time is an area 2, and sequentially, the area for reserving the oldest operating time is an area 60.

[0063] Then, whenever the operating time reserving process (S404) is performed, the oldest data is eliminated from the data reserved in the areas ([2]). In the determination of the oldest data, at the time point of taking 60 areas in the storing unit, addresses can be automatically assigned, for example, an address of the area 1 is 001, an address of the area 2 is 002, ..., and an address of the area 60 is 060. Since the addresses are sequential, it is possible to determine

the oldest data by confirming the addresses.

[0064] Then, a process of moving the data of the area 59 to the area 60 and moving the data of the area 58 to the area 59 is repeatedly performed until the data of the area 1 is moved to the data 2 ([3]).

[0065] Then, it is possible to reserve the operating time for past 60 minutes by reserving the newest operating time is reserved in the area 1 ([4]).

[0066] When the operating time reserving process (S404) is ended, the integrated operating time and the integrated pausing time are cleared (S405). By clearing them, it is possible to measure the operating time for the next 1 minute.

[0067] Then, a loading time rate for 15 minutes is calculated (S406). In the calculating method, the operating time for 15 minutes is summed from the newest data reserved in the operating time reserving process (S404), the summed operating time is divided by 15 minutes, and thus it is possible to calculate the loading time rate for 15 minutes. Herein, as for the calculated loading time rate for 15 minutes, a higher rate may be reserved as a maximum value in comparison with the previously calculated loading time rate for 15 minutes.

[0068] Then, the loading time rate for 30 minutes (S407), the loading time rate for 45 minutes (S408), and the loading time rate for 60 minutes (S409) are calculated, and the loading time rate measuring process is ended. It is obvious that the method of the loading time rate calculating process of each time interval is the same as the loading time rate calculating process for 15 minutes, and the same is applied to each time. In addition, it is obvious that modification is easily made, for example, each time interval of the loading time rate calculating process is elongated or shortened.

[0069] As described above, when the measured or calculated data is eliminated at the time of cutoff of a power source, the data is not possible to be accumulated, which is meaningless. Accordingly, there is a need to reserve the data so as not to be eliminated at the time of cutoff of the power source.

[0070] As a reserving method, the data is reserved in the storing unit 28 provided in the hoist and transverse inverter controlling unit 12. In addition, the data may be reserved in an external storing device such as a hard disk or a USB. As described above, as a form of outputting the measured or calculated data, for example, when a diagram illustrated in FIG. 10 is displayed by accessing a PC, the measured or calculated data can be seen at a glance, and it is easy to comprehensively determine the remaining lifetime of the hoist.

[0071] In addition, the measured or calculate data may be displayed by a digital display provided in the controlling unit of the general inverter crane apparatus. In this embodiment, a method of displaying the measured or calculated data by the digital display will be described with reference to FIGS. 11 and 12.

[0072] In order to display the measured or calculated data, as illustrated in FIG. 11, the hoist and transverse inverter controlling unit 12 includes a 7-segment LED display 29 that is a digital display capable of displaying characters, and four switches 30 for operating the display.

[0073] FIG. 12 illustrates an example of a display operating method and a display configuration of the measured or calculated data displayed by the 7-segment LED display 29.

[0074] For example, in the operation to display the operating time, the number of operation times is initially displayed, and a down-arrow switch is operated to select the operating time. After selecting the operating time, the total operating time is displayed when a right-arrow switch is operated. Then, when the down-arrow switch is operated, the operating time of no load is displayed. When the down-arrow switch or up-arrow switch is operated, the total operating time and the operating time for each load classification can be displayed.

[0075] According to this embodiment, it is possible to display the remaining lifetime of the hoist, and it is possible to provide the hoist life calculating device capable of measuring and displaying the loading time rate, that is, use frequency of the hoist with high precision, by measuring the operation situations also including the pausing time.

[0076] In addition, since it is possible to measuring and displaying the total number of operation times, the number of operation times for each load, the total operating time, and the operating time for each load, it is possible to also provide determination data in estimating the life of the hoist.

REFERENCE SIGNS LIST

[0077]

1: crane hook
2: wire rope
3: hoist induction motor
4: hoist
5: transverse induction motor
6: transverse device
7: transverse girder
8: traveling induction motor
9: traveling device

10: traveling girder
11: hoist and transverse inverter device
12: hoist and transverse inverter controlling unit
13: operation input device
14: hoist inverter
15: transverse inverter
16: induction motor brake
17: traveling inverter device
18: traveling inverter controlling unit
19: traveling inverter
20: current measuring unit
21: load converting unit
22: slippage measuring unit
23: encoder
24: operating time measuring unit
25: operation cycle measuring unit
26: remaining lifetime calculating unit
27: loading time rate measuring unit
28: storing unit
29: 7-segment led
30: operation switch

Claims

1. A hoist life calculating device which calculates a life of a hoist (4) performing operations such as lifting and lowering, comprising:

a load calculating unit (21) configured to calculate a suspended load of the hoist (4);
an operating time measuring unit (24) configured to count an operating time for each load calculated by the load calculating unit (21); and
a remaining lifetime calculating unit (26) configured to calculate a loading rate from the operating time for each load measured by the operating time measuring unit (24), and calculate a remaining lifetime of the hoist (4) from the obtained loading rate;
characterized in that:

the load calculating unit (21) is configured to calculate the suspended load of the hoist (4) from a current value of a control inverter of the hoist (4) and the number of rotations of a motor; and
the hoist life calculating device further comprises:

an operation cycle measuring unit (25) configured to count both of the number of lifting operation times and the number of lowering operation times of the hoist (4) for each load calculated by the load calculating unit (21); and
a loading time rate measuring unit (27) configured to measure a loading time rate that is a ratio of an operating time and a pausing time from the operating time for each load measured by the operating time measuring unit (24).

2. The hoist life calculating device according to claim 1, further comprising
a displaying unit configured to display the loading time rate for each time segment.

Patentansprüche

1. Hebezug-Lebensdauerberechnungsvorrichtung, welche die Lebensdauer eines Hebezugs (4) berechnet, der Tätigkeiten wie Heben und Senken ausführt, umfassend:

eine Lastberechnungseinheit (21), die konfiguriert ist, eine hängende Last des Hebezugs (4) zu berechnen;
eine Betriebszeitmesseinheit (24), die konfiguriert ist, die Betriebszeit jeder Last zu erfassen, die von der Last-

berechnungseinheit (21) berechnet wird; und
eine Restlebensdauerberechnungseinheit (26), die konfiguriert ist, eine Belastungshäufigkeit aus der Betriebszeit für jede Last zu berechnen, die von der Betriebszeitmesseinheit (24) gemessen wurde, und eine Restlebensdauer des Hebezugs (4) aus der erhaltenen Belastungshäufigkeit zu berechnen,
dadurch gekennzeichnet, dass:

die Lastberechnungseinheit (21) konfiguriert ist, die hängende Last des Hebezugs (4) aus einem Stromwert eines Steuerwechselrichters des Hebezugs (4) und der Anzahl an Drehungen eines Motors zu berechnen; und
die Hebezug-Lebensdauerberechnungsvorrichtung weiters umfasst:

eine Arbeitszyklusmesseinheit (25), die konfiguriert ist, sowohl die Anzahl an Hebebetriebszeiten als auch die Anzahl an Senkbetriebszeiten des Hebezugs (4) für jede Last zu zählen, die von der Lastberechnungseinheit (21) berechnet wird; und
eine Belastungszeitanteilmesseinheit (27), die konfiguriert ist, einen Belastungszeitanteil, der ein Verhältnis zwischen einer Betriebszeit und einer Pausenzeit ist, aus der Betriebszeit für jede Last zu messen, die von der Betriebszeitmesseinheit (24) gemessen wird.

2. Hebezug-Lebensdauerberechnungsvorrichtung nach Anspruch 1, weiters umfassend
eine Anzeigeeinheit, die konfiguriert ist, den Belastungszeitanteil für jedes Zeitsegment anzuzeigen.

Revendications

1. Dispositif de calcul de durée de vie de treuil qui calcule la durée de vie d'un treuil (4) effectuant des opérations comme un levage et un abaissement, comprenant :

une unité de calcul de charge (21) configurée pour calculer une charge suspendue du treuil (4) ;
une unité de mesure de temps de fonctionnement (24) configurée pour compter une durée de fonctionnement pour chaque charge calculée par l'unité de calcul de charge (21) ; et
une unité de calcul de durée de vie restante (26) configurée pour calculer un taux de chargement à partir du temps de fonctionnement pour chaque charge mesurée par l'unité de mesure de temps de fonctionnement (24), et calculer une durée de vie restante du treuil (4) à partir du taux de chargement obtenu ;
caractérisé en ce que :

l'unité de calcul de charge (21) est configurée pour calculer la charge suspendue du treuil (4) à partir d'une valeur en cours d'un inverseur de commande du treuil (4) et du nombre de rotations d'un moteur ; et
le dispositif de calcul de durée de vie de treuil comprend en outre :

une unité de mesure de cycle de fonctionnement (25) configurée pour compter à la fois le nombre de temps d'opération de levage et le nombre de temps d'opération d'abaissement du palan (4) pour chaque charge calculée par l'unité de calcul de charge (21) ; et
une unité de mesure de temps de chargement (27) configurée pour mesurer un taux de temps de chargement qui est un rapport entre un temps de fonctionnement et un temps de pause à partir du temps de fonctionnement pour chaque charge mesurée par l'unité de mesure de temps de fonctionnement.

2. Dispositif de calcul de durée de vie de treuil selon la revendication 1, comprenant en outre une unité d'affichage configurée pour afficher le taux de temps de chargement pour chaque segment de temps.

FIG. 1

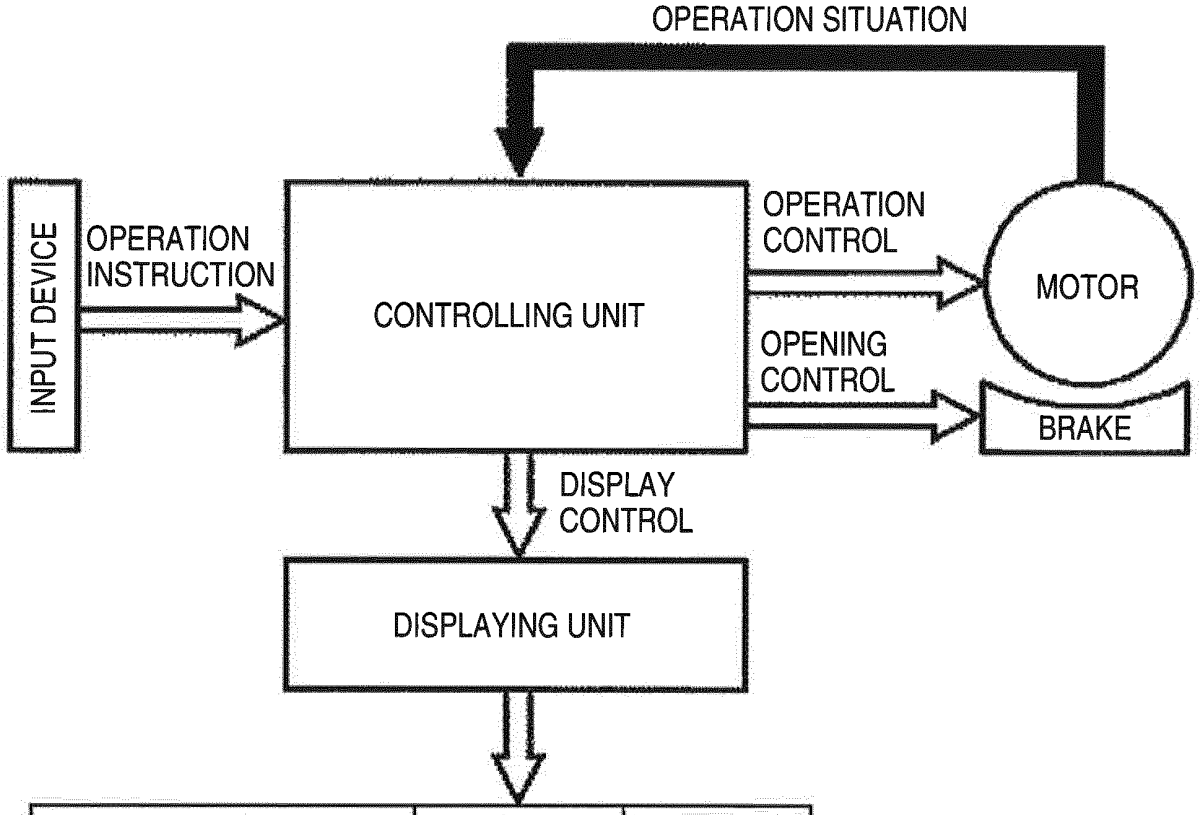

CONTENT	DISPLAY	UNIT
TOTAL OPERATING TIME	12345678	TIME
NO-LOAD OPERATING TIME	12000000	TIME
LIGHT-LOAD OPERATING TIME	340000	TIME
MEDIUM-LOAD OPERATING TIME	5600	TIME
HEAVY-LOAD OPERATING TIME	70	TIME
SUPERHEAVY-LOAD OPERATING TIME	8	TIME
TOTAL NUMBER OF STARTING TIMES	12345678	TIMES
NUMBER OF NO-LOAD STARTING TIMES	12000000	TIMES
NUMBER OF LIGHT-LOAD STARTING TIMES	340000	TIMES
NUMBER OF MEDIUM-LOAD STARTING TIMES	5600	TIMES
NUMBER OF HEAVY-LOAD STARTING TIMES	70	TIMES
NUMBER OF SUPERHEAVY-LOAD STARTING TIMES	8	TIMES
LOADING TIME RATE	45	%/ED
LOADING RATE	0.55	—
REMAINING LIFETIME	12345678	TIME

FIG. 2

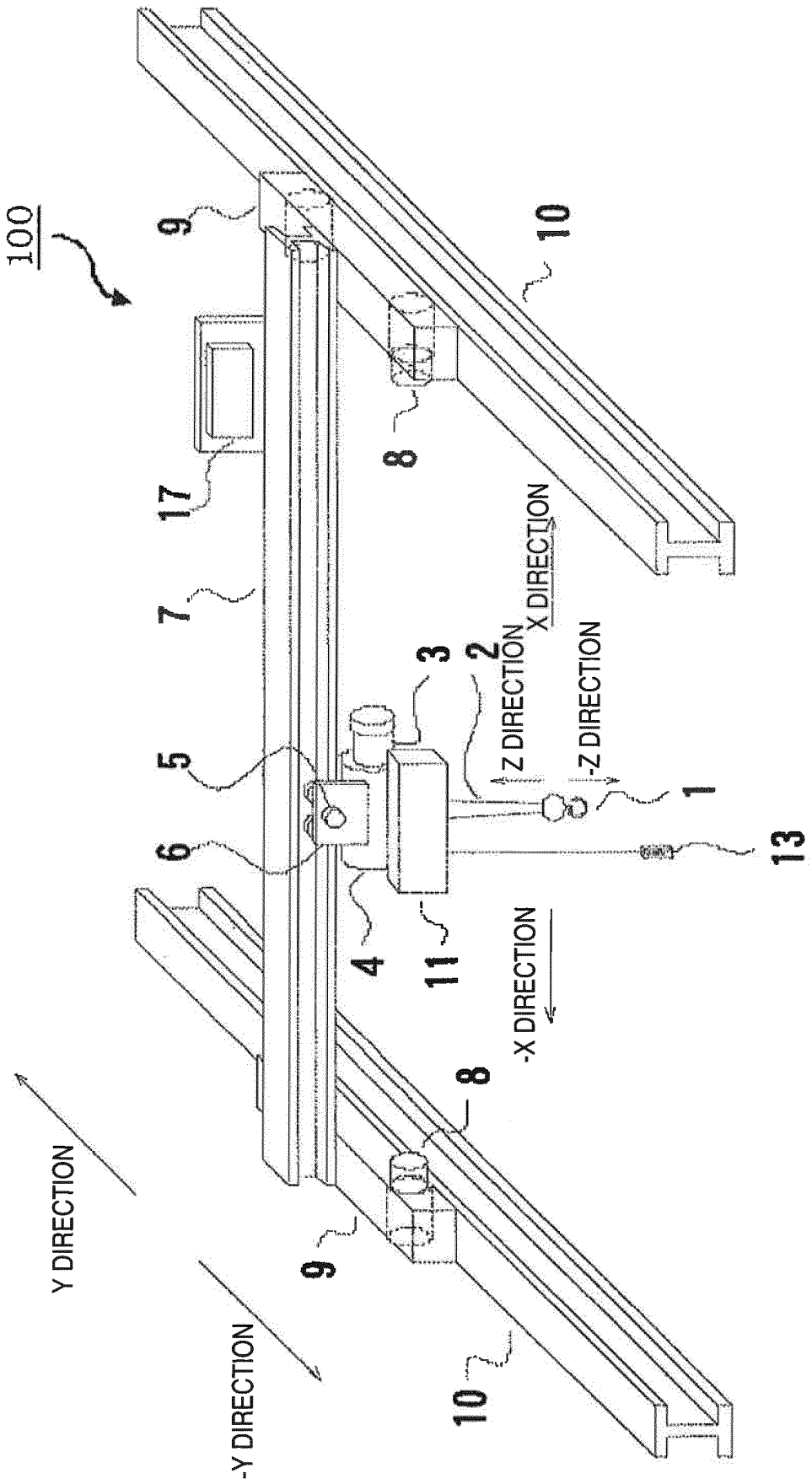
100
9
10
17
8
7
X DIRECTION
3
2
Z DIRECTION
-Z DIRECTION
5
1
6
13
4
11
-X DIRECTION
8
Y DIRECTION
9
-Y DIRECTION
10

FIG. 3

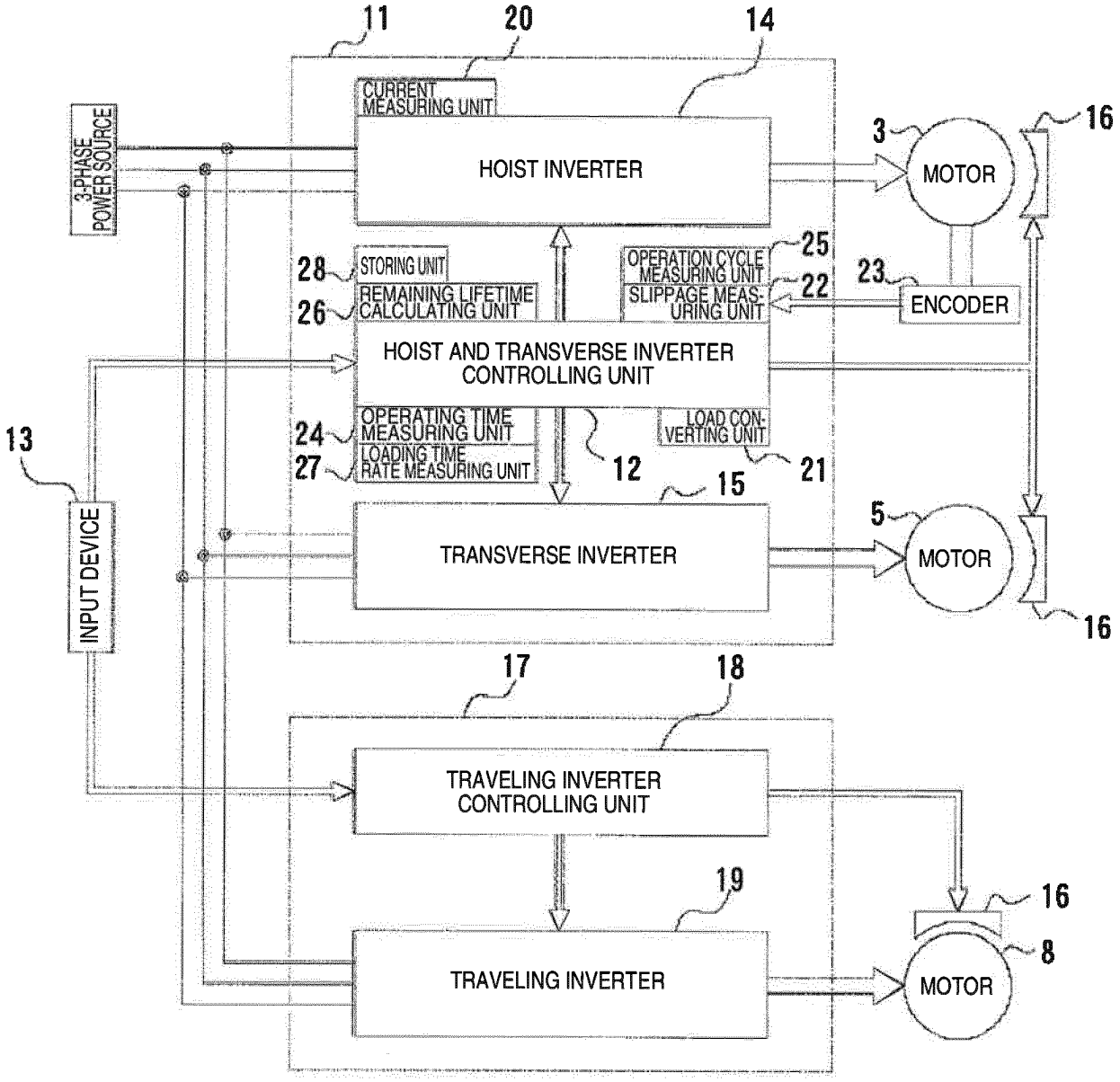
11
20
14
CURRENT MEASURING UNIT
3-PHASE POWER SOURCE
HOIST INVERTER
3
MOTOR
16
28
STORING UNIT
25
OPERATION CYCLE MEASURING UNIT
23
26
REMAINING LIFETIME CALCULATING UNIT
22
SLIPPAGE MEASURING UNIT
ENCODER
HOIST AND TRANSVERSE INVERTER CONTROLLING UNIT
13
24
OPERATING TIME MEASURING UNIT
LOAD CONVERTING UNIT
27
LOADING TIME RATE MEASURING UNIT
12
21
15
5
INPUT DEVICE
TRANSVERSE INVERTER
MOTOR
16
17
18
TRAVELING INVERTER CONTROLLING UNIT
19
16
8
TRAVELING INVERTER
MOTOR

FIG. 4

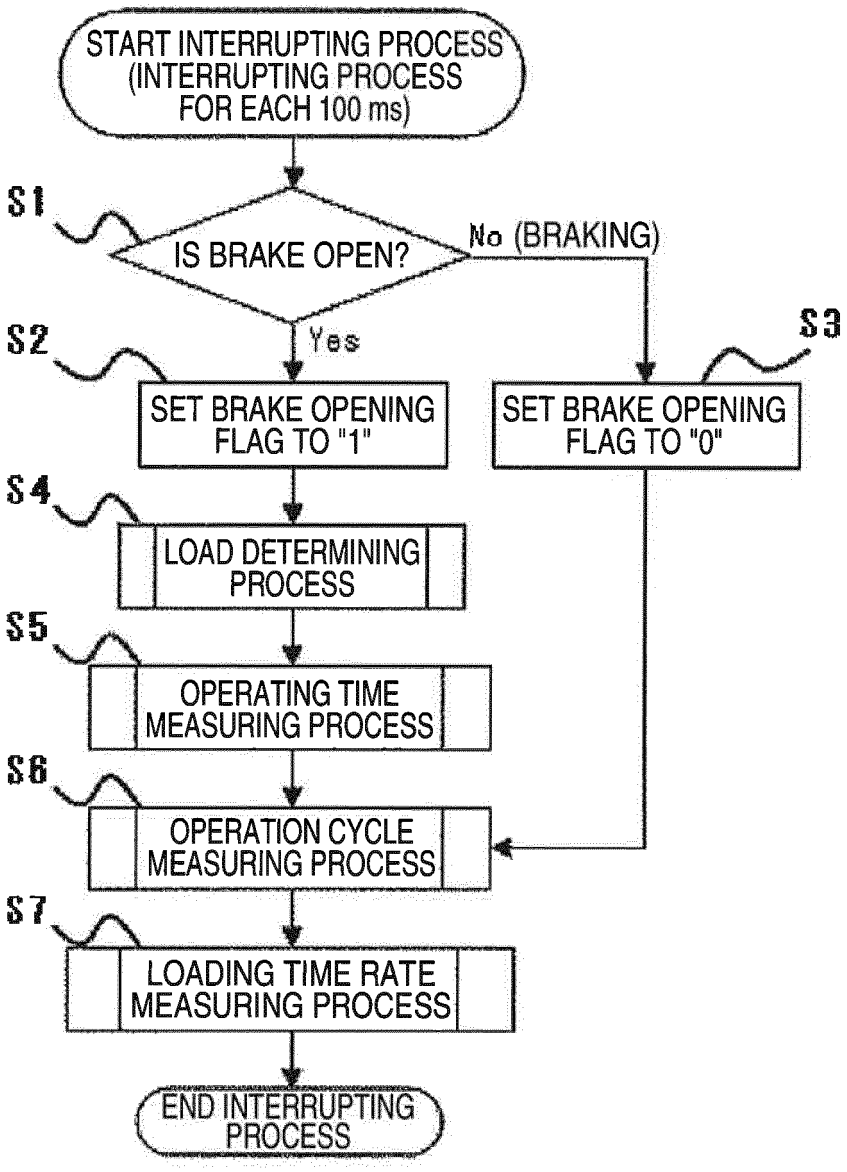
START INTERRUPTING PROCESS (INTERRUPTING PROCESS FOR EACH 100 ms)
S1
IS BRAKE OPEN?
No (BRAKING)
Yes
S2
SET BRAKE OPENING FLAG TO "1"
S3
SET BRAKE OPENING FLAG TO "0"
S4
LOAD DETERMINING PROCESS
S5
OPERATING TIME MEASURING PROCESS
S6
OPERATION CYCLE MEASURING PROCESS
S7
LOADING TIME RATE MEASURING PROCESS
END INTERRUPTING PROCESS

FIG. 5

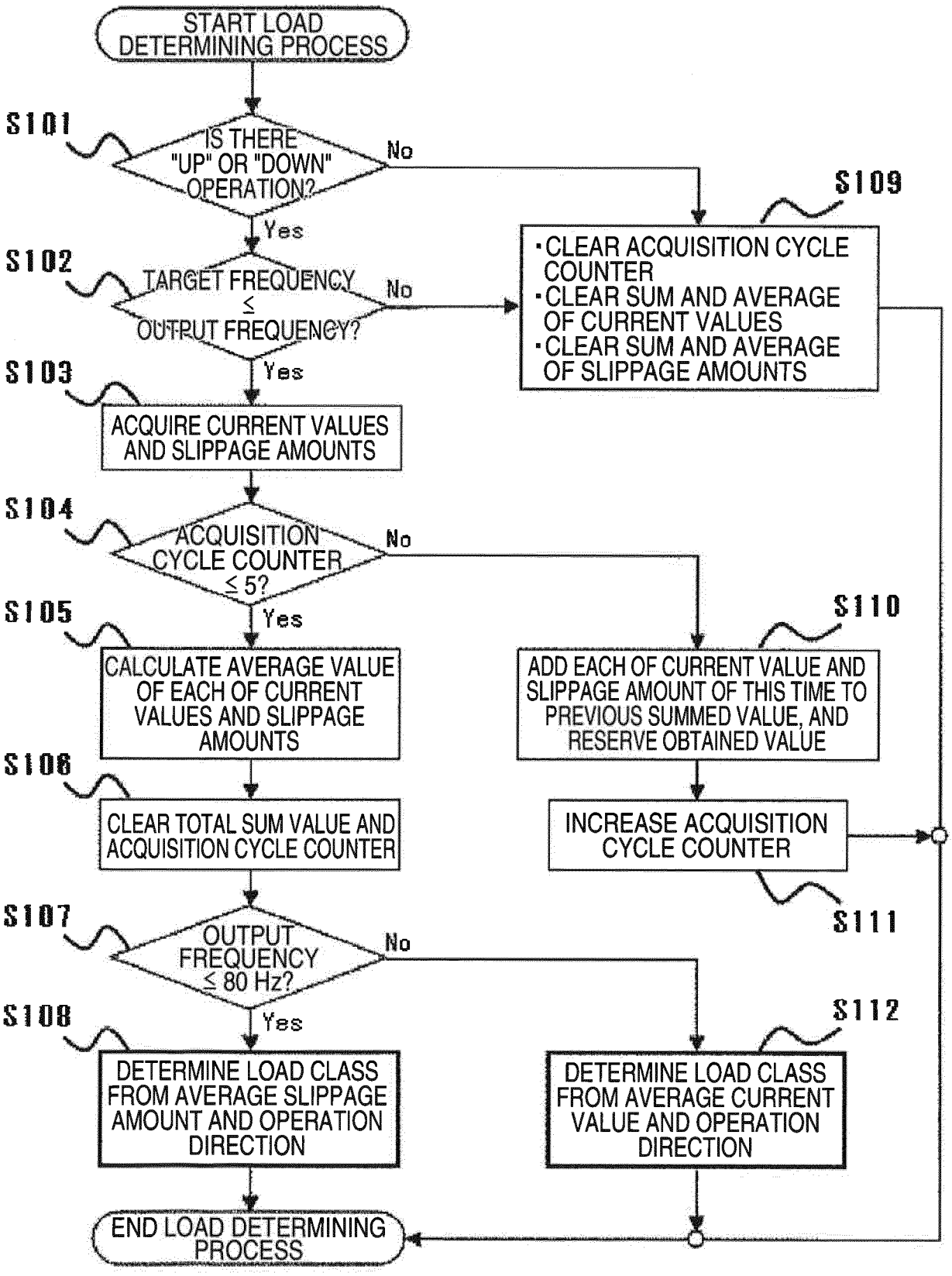
START LOAD DETERMINING PROCESS
S101
IS THERE "UP" OR "DOWN" OPERATION?
No
Yes
S109
・CLEAR ACQUISITION CYCLE COUNTER
・CLEAR SUM AND AVERAGE OF CURRENT VALUES
・CLEAR SUM AND AVERAGE OF SLIPPAGE AMOUNTS
S102
TARGET FREQUENCY ≤ OUTPUT FREQUENCY?
No
Yes
S103
ACQUIRE CURRENT VALUES AND SLIPPAGE AMOUNTS
S104
ACQUISITION CYCLE COUNTER ≤ 5?
No
Yes
S105
CALCULATE AVERAGE VALUE OF EACH OF CURRENT VALUES AND SLIPPAGE AMOUNTS
S110
ADD EACH OF CURRENT VALUE AND SLIPPAGE AMOUNT OF THIS TIME TO PREVIOUS SUMMED VALUE, AND RESERVE OBTAINED VALUE
S106
CLEAR TOTAL SUM VALUE AND ACQUISITION CYCLE COUNTER
INCREASE ACQUISITION CYCLE COUNTER
S111
S107
OUTPUT FREQUENCY ≤ 80 Hz?
No
Yes
S108
DETERMINE LOAD CLASS FROM AVERAGE SLIPPAGE AMOUNT AND OPERATION DIRECTION
S112
DETERMINE LOAD CLASS FROM AVERAGE CURRENT VALUE AND OPERATION DIRECTION
END LOAD DETERMINING PROCESS

FIG. 6

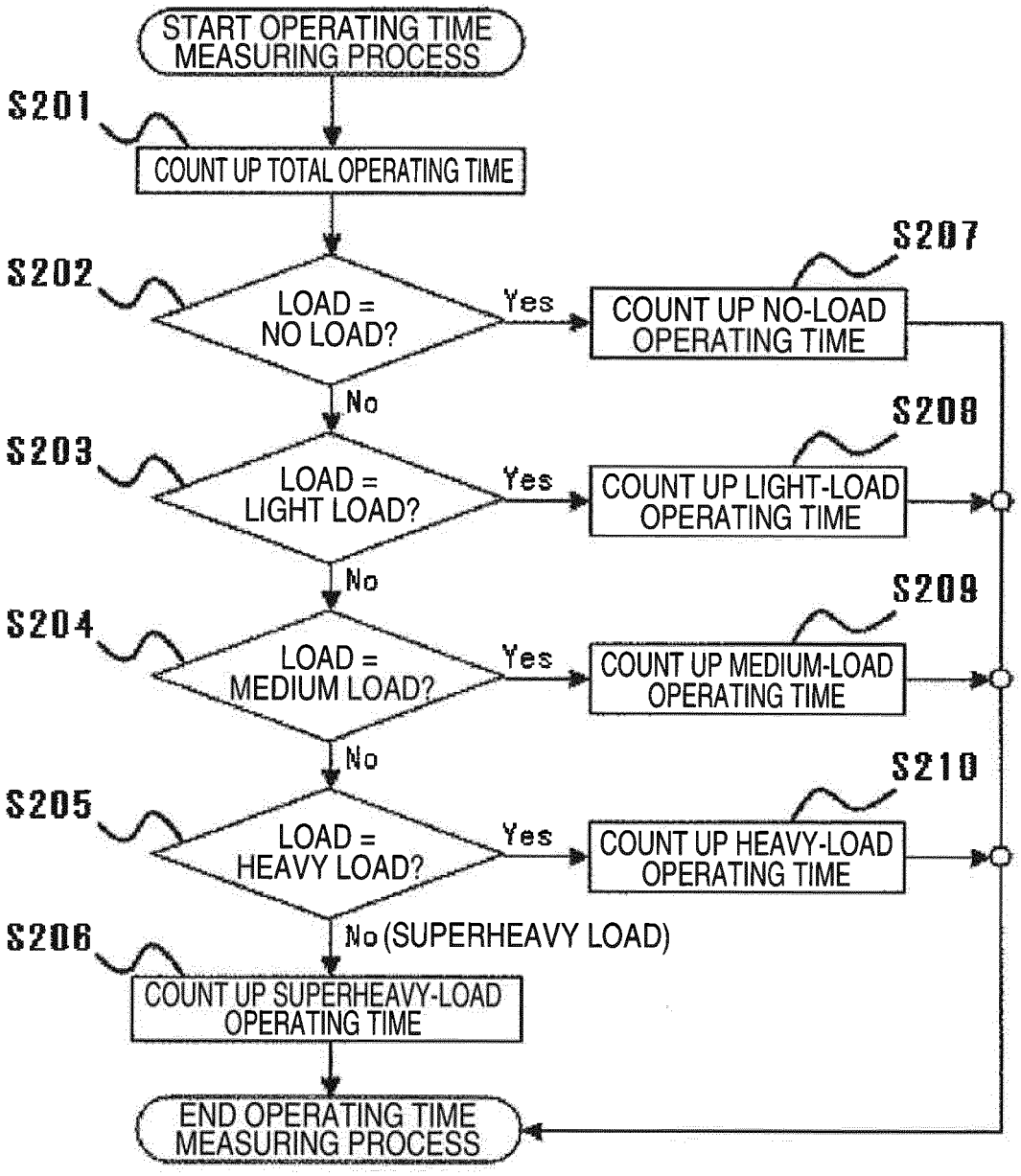
START OPERATING TIME MEASURING PROCESS
S201
COUNT UP TOTAL OPERATING TIME
S202
LOAD = NO LOAD?
Yes
S207
COUNT UP NO-LOAD OPERATING TIME
No
S203
LOAD = LIGHT LOAD?
Yes
S208
COUNT UP LIGHT-LOAD OPERATING TIME
No
S204
LOAD = MEDIUM LOAD?
Yes
S209
COUNT UP MEDIUM-LOAD OPERATING TIME
No
S205
LOAD = HEAVY LOAD?
Yes
S210
COUNT UP HEAVY-LOAD OPERATING TIME
No (SUPERHEAVY LOAD)
S206
COUNT UP SUPERHEAVY-LOAD OPERATING TIME
END OPERATING TIME MEASURING PROCESS

FIG. 7

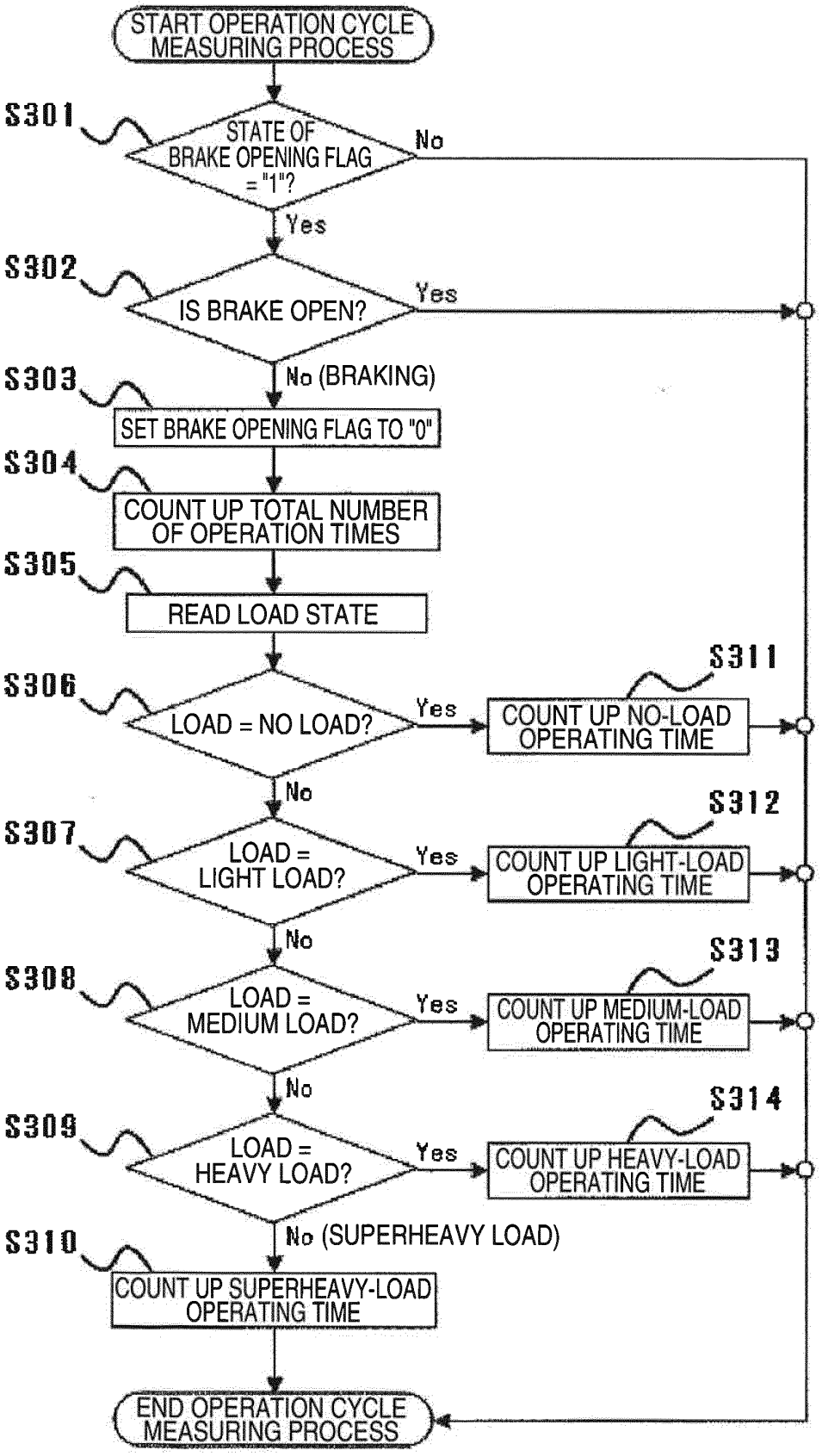
START OPERATION CYCLE MEASURING PROCESS
S301
STATE OF BRAKE OPENING FLAG = "1"?
No
Yes
S302
IS BRAKE OPEN?
Yes
No (BRAKING)
S303
SET BRAKE OPENING FLAG TO "0"
S304
COUNT UP TOTAL NUMBER OF OPERATION TIMES
S305
READ LOAD STATE
S306
LOAD = NO LOAD?
Yes
S311
COUNT UP NO-LOAD OPERATING TIME
No
S307
LOAD = LIGHT LOAD?
Yes
S312
COUNT UP LIGHT-LOAD OPERATING TIME
No
S308
LOAD = MEDIUM LOAD?
Yes
S313
COUNT UP MEDIUM-LOAD OPERATING TIME
No
S309
LOAD = HEAVY LOAD?
Yes
S314
COUNT UP HEAVY-LOAD OPERATING TIME
No (SUPERHEAVY LOAD)
S310
COUNT UP SUPERHEAVY-LOAD OPERATING TIME
END OPERATION CYCLE MEASURING PROCESS

FIG. 8

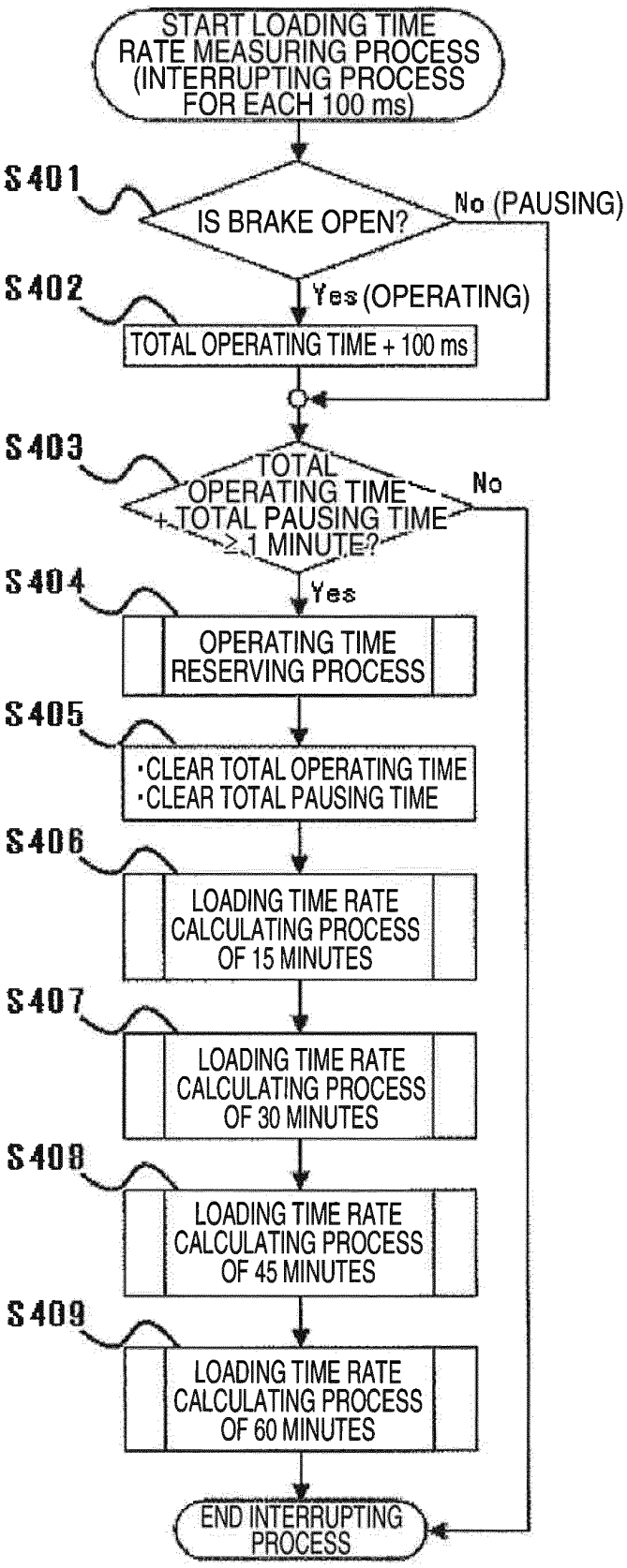
START LOADING TIME RATE MEASURING PROCESS (INTERRUPTING PROCESS FOR EACH 100 ms)
S401
IS BRAKE OPEN?
No (PAUSING)
Yes (OPERATING)
S402
TOTAL OPERATING TIME + 100 ms
S403
TOTAL OPERATING TIME + TOTAL PAUSING TIME ≥ 1 MINUTE?
No
Yes
S404
OPERATING TIME RESERVING PROCESS
S405
・CLEAR TOTAL OPERATING TIME
・CLEAR TOTAL PAUSING TIME
S406
LOADING TIME RATE CALCULATING PROCESS OF 15 MINUTES
S407
LOADING TIME RATE CALCULATING PROCESS OF 30 MINUTES
S408
LOADING TIME RATE CALCULATING PROCESS OF 45 MINUTES
S409
LOADING TIME RATE CALCULATING PROCESS OF 60 MINUTES
END INTERRUPTING PROCESS

FIG. 9

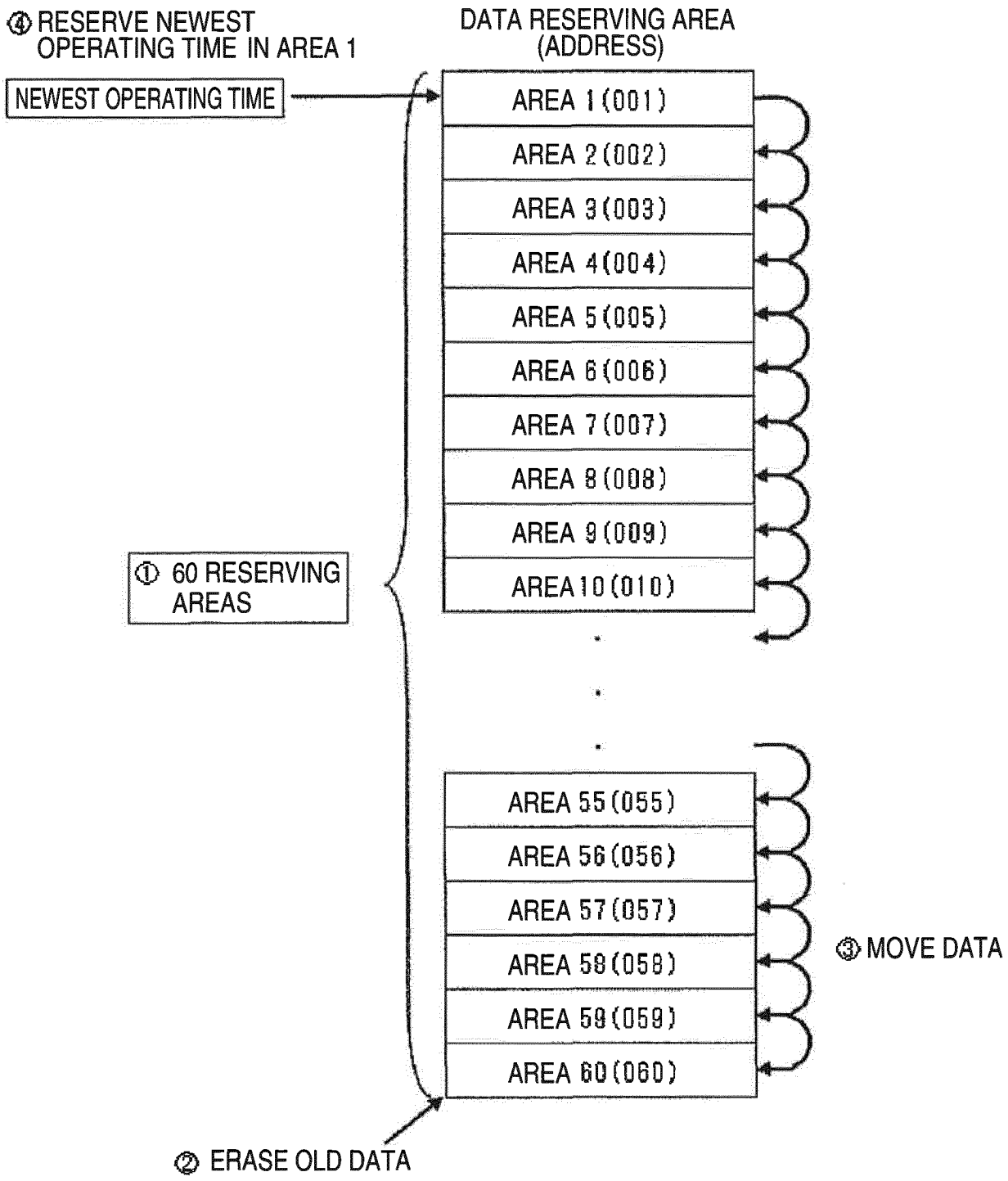
④ RESERVE NEWEST OPERATING TIME IN AREA 1
NEWEST OPERATING TIME
DATA RESERVING AREA (ADDRESS)
AREA 1 (001)
AREA 2 (002)
AREA 3 (003)
AREA 4 (004)
AREA 5 (005)
AREA 6 (006)
AREA 7 (007)
AREA 8 (008)
AREA 9 (009)
AREA 10 (010)
① 60 RESERVING AREAS
AREA 55 (055)
AREA 56 (056)
AREA 57 (057)
AREA 58 (058)
AREA 59 (059)
AREA 60 (060)
③ MOVE DATA
② ERASE OLD DATA

FIG. 10

ITEM	NUMERICAL VALUE	UNIT
TOTAL NUMBER OF OPERATION TIMES	5000	TIMES
NUMBER OF NO-LOAD OPERATION TIMES	2300	TIMES
NUMBER OF LIGHT-LOAD OPERATION TIMES	1500	TIMES
NUMBER OF MEDIUM-LOAD OPERATION TIMES	700	TIMES
NUMBER OF HEAVY-LOAD OPERATION TIMES	400	TIMES
NUMBER OF SUPERHEAVY-LOAD OPERATION TIMES	100	TIMES
TOTAL OPERATING TIME	900	TIME
NO-LOAD OPERATING TIME	510	TIME
LIGHT-LOAD OPERATING TIME	230	TIME
MEDIUM-LOAD OPERATING TIME	100	TIME
HEAVY-LOAD OPERATING TIME	50	TIME
SUPERHEAVY-LOAD OPERATING TIME	10	TIME
LOADING TIME RATE OF 15 MINUTES	45	%ED
LOADING TIME RATE OF 30 MINUTES	38	%ED
LOADING TIME RATE OF 45 MINUTES	35	%ED
LOADING TIME RATE OF 60 MINUTES	25	%ED
AVERAGE LOADING RATE	0.38	—
REMAINING LIFETIME OF HOIST	6109	TIME

FIG. 11

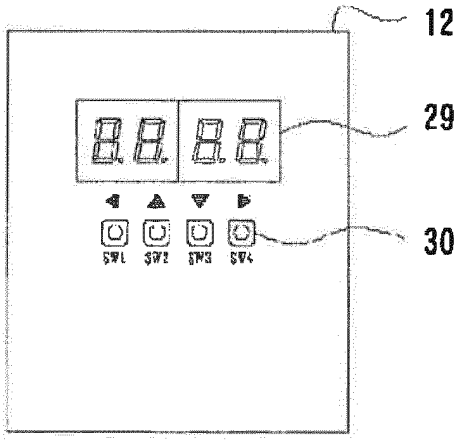

FIG. 12

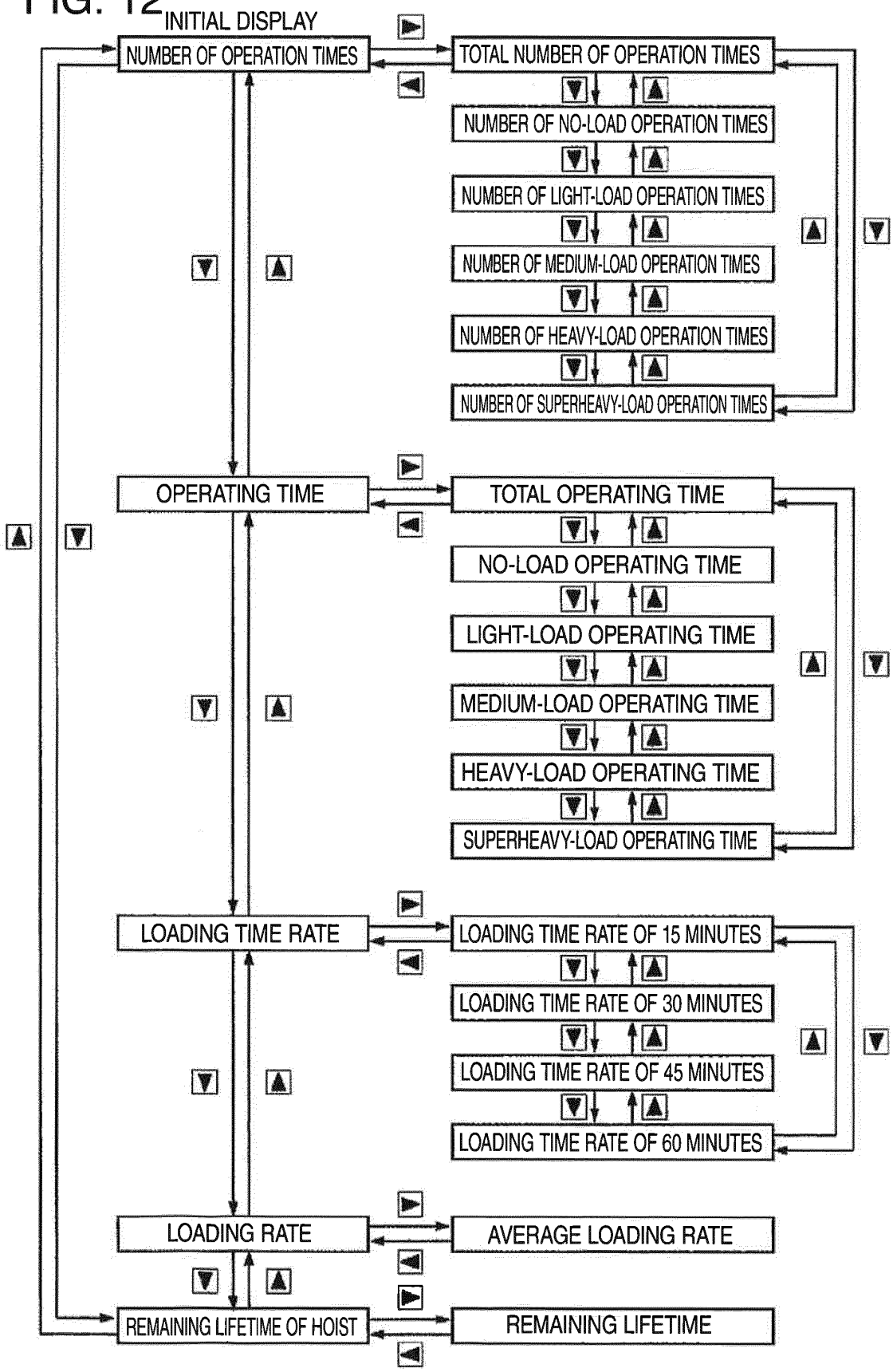
INITIAL DISPLAY
NUMBER OF OPERATION TIMES
TOTAL NUMBER OF OPERATION TIMES
NUMBER OF NO-LOAD OPERATION TIMES
NUMBER OF LIGHT-LOAD OPERATION TIMES
NUMBER OF MEDIUM-LOAD OPERATION TIMES
NUMBER OF HEAVY-LOAD OPERATION TIMES
NUMBER OF SUPERHEAVY-LOAD OPERATION TIMES
OPERATING TIME
TOTAL OPERATING TIME
NO-LOAD OPERATING TIME
LIGHT-LOAD OPERATING TIME
MEDIUM-LOAD OPERATING TIME
HEAVY-LOAD OPERATING TIME
SUPERHEAVY-LOAD OPERATING TIME
LOADING TIME RATE
LOADING TIME RATE OF 15 MINUTES
LOADING TIME RATE OF 30 MINUTES
LOADING TIME RATE OF 45 MINUTES
LOADING TIME RATE OF 60 MINUTES
LOADING RATE
AVERAGE LOADING RATE
REMAINING LIFETIME OF HOIST
REMAINING LIFETIME

FIG. 13

	OPERATION DIRECTION		LOAD CLASSIFICATION	LOADING RATIO
	UP	DOWN		
CURRENT VALUE (A)	0.0~2.0	0.0~2.0	NO LOAD (0%)	0.10
	2.1~5.0	2.1~4.0	LIGHT LOAD (1%~25%)	0.25
	5.1~12.0	4.1~10.0	MEDIUM LOAD (26%~50%)	0.50
	12.1~20.0	10.1~20.0	HEAVY LOAD (51%~75%)	0.75
	20.1~	20.1~	SUPERHEAVY LOAD (76%~)	1.00

FIG. 14

	OPERATION DIRECTION		LOAD CLASSIFICATION	LOADING RATIO
	UP	DOWN		
SLIPPAGE AMOUNT (%)	0.0~0.1	-0.1~ 0.0	NO LOAD (0%)	0.10
	0.2~0.5	-0.3~-0.2	LIGHT LOAD (1%~25%)	0.25
	0.8~0.9	-0.4~-0.3	MEDIUM LOAD (26%~50%)	0.50
	1.0~1.5	-0.7~-0.5	HEAVY LOAD (51%~75%)	0.75
	1.6~	~-0.8	SUPERHEAVY LOAD (76%~)	1.00

REFERENCES CITED IN THE DESCRIPTION

This list of references cited by the applicant is for the reader's convenience only. It does not form part of the European patent document. Even though great care has been taken in compiling the references, errors or omissions cannot be excluded and the EPO disclaims all liability in this regard.

Patent documents cited in the description

- JP 2010180001 A **[0002] [0003]**