(19) Europäisches Patentamt
European Patent Office
Office européen des brevets

(11) EP 2 998 426 B1

(12) **EUROPEAN PATENT SPECIFICATION**

(45) Date of publication and mention of the grant of the patent:
15.11.2017 Bulletin 2017/46

(51) Int Cl.:
D06F 39/08 *(2006.01)* ***D06F 39/10*** *(2006.01)*

(21) Application number: **14184886.1**

(22) Date of filing: **16.09.2014**

(54) **WASHING MACHIINE HAVING AN IMPROVED VALVE/FILTER ASSEMBLY**

WASCHMASCHINE MIT EINEM FILTERELEMENT UND EINEM KLAPPENVENTIL

MACHINE À LAVER ÉQUIPÉE D'UN ÉLÉMENT FILTRANT ET UN CLAPET

(84) Designated Contracting States:
AL AT BE BG CH CY CZ DE DK EE ES FI FR GB GR HR HU IE IS IT LI LT LU LV MC MK MT NL NO PL PT RO RS SE SI SK SM TR

(43) Date of publication of application:
23.03.2016 Bulletin 2016/12

(73) Proprietor: **Electrolux Appliances Aktiebolag**
105 45 Stockholm (SE)

(72) Inventors:
- **Zoppellari, Tiziano**
33080 Porcia (PN) (IT)
- **Maiero, Marco**
33080 Porcia (PN) (IT)

(74) Representative: **Electrolux Group Patents**
AB Electrolux
Group Patents
105 45 Stockholm (SE)

(56) References cited:
EP-A1- 2 426 247 **EP-A1- 2 503 050**
EP-A1- 2 746 447 **EP-A1- 2 746 448**
WO-A1-2010/066893

Note: Within nine months of the publication of the mention of the grant of the European patent in the European Patent Bulletin, any person may give notice to the European Patent Office of opposition to that patent, in accordance with the Implementing Regulations. Notice of opposition shall not be deemed to have been filed until the opposition fee has been paid. (Art. 99(1) European Patent Convention).

EP 2 998 426 B1

Printed by Jouve, 75001 PARIS (FR)

Description

Field of the invention

[0001] The invention relates to a washing machine (the expression "washing machine" including both "simple" washing machines, i.e. washing machines which can only wash and rinse laundry, and washing-drying machines, i.e. washing machines which can also dry laundry, both of the front-loading or top-loading type) with a draining circuit comprising a valve element adapted to selectively open and close the passage of liquid from a tub to the draining circuit, and a filter element for impeding that foreign bodies such as coins or buttons escaping the laundry could reach the draining pump.

Background of the invention

[0002] EP1204792 discloses a washing machine, wherein an inlet of a draining circuit is fluidly connected to a sump. A valve element is arranged between the sump and the inlet of the draining circuit. The valve element shuts off the sump from the draining circuit during a washing cycle by using a valve seat and a ball as closing element. The ball is freely movable within a draining section of the draining circuit.

[0003] By using a valve element of the above kind, water within the draining circuit needs not be heated during a heating phase of a washing cycle of the washing machine, whereby the energy consumption of the washing machine is reduced. Assembling of the draining circuit in a way that guarantees proper operation of the valve and long-term functionality of the closing state of the valve element may be a problem, as such a valve element however is a component in danger of failure, e.g. because of clogging. As such it needs servicing. Servicing however may be complicated by valve element design and mounting location and in the consequence cost intensive.

[0004] EP2503050 tries to solve above problem by providing a washing machine comprising a tub with a sump and a draining circuit, wherein the sump is fluidly connected to the draining circuit. A filter element is provided, which is removably positionable in the sump, *e.g.* which can be removed from the sump by a user, *e.g.* for cleaning or replacement, and can be (re)inserted into the sump thereafter. By inserting the filter element in the sump, preferably upstream the draining circuit, foreign objects and fluff are effectively filtered out of the liquid drained from the tub. In consequence, no or a reduced amount of foreign objects enter the draining circuit of the washing machine. The sump is preferably formed integrally with the tub, such that no additional mounting or assembly step is necessary for mounting the sump at the tub. The washing machine may preferably comprise a chamber for at least a portion of a draining pump, wherein the chamber is preferably integrally formed with the sump and the tub, such that fewer assembling steps and less assembly time for assembling the washing machine are required. The washing machine disclosed in EP2503050 also comprises a valve element for selectively obstructing (or closing) a passage of liquid from the tub to the draining circuit. As such, the valve element is preferably arranged downstream the tub and upstream the draining circuit. The valve element is adapted to seal or close the tub from the draining circuit, preferably in particular during a heating phase of a washing cycle of the washing machine. By blocking the fluid connection to the draining circuit when the valve element is in its closed position, water within the draining circuit is not heated and the energy consumption of the washing machine is reduced. For enhancing the serviceability of the washing machine with respect to the valve element, *e.g.* for easy handling thereof, the filter element comprises the valve element. By providing a filter element comprising the valve element, the valve element can for example be removed from the sump or be (re)inserted together with the filter element such that easy handling of the valve element is provided. As a consequence, serviceability of the washing machine is improved.

[0005] EP2746448 discloses a laundry treatment appliance. The laundry treatment appliance comprises a rigid tub for containing laundry treatment liquids, the tub comprising a tub outlet for draining the treatment liquids therefrom, a manifold comprising a manifold inlet coupled with the tub outlet for receiving said treatment liquids, and a gasket arranged between said manifold inlet and said tub outlet for sealingly coupling thereof. The laundry treatment appliance further comprises a floating valve, pivotally hinged to said gasket, adapted to swing between a closed position wherein the floating valve abuts a valve seat associated with the gasket thereby impeding the passage of the treatment liquids from said tub to said manifold, and an opened position wherein the floating valve is at least partially spaced from said valve seat thereby allowing the treatment liquids to pass from said tub to said manifold. Said floating valve and said valve seat have different rigidity.

Summary of the Invention

[0006] Applicant has found that the above-described solutions are noisy. Indeed, in the solutions disclosed in EP1204792 and in EP2503050 the valve element is allowed to move within a rigid body, *i.e.* the sump and the filter element, respectively. Thus, with respect to previous solutions providing a valve element freely movable within a non-rigid sleeve connecting the sump and the draining circuit to each other, the solutions disclosed in EP1204792 and in EP2503050 represent a worsening in terms of noise perceived by the user.

[0007] Applicant has found that the above-described solutions also cause limited floating valve movement capabilities. Indeed, foreign bodies accumulating in the filter element may interfere with, and impair, valve element movement, thus negatively affecting both valve element ascending movement (and hence mechanical and ther-

mal insulation between the tub and the draining circuit) as well as valve element descending movement (and hence quick draining of the treatment liquids from the tub). Moreover, noise and valve element movement capabilities issues are exacerbated by relatively large and/or frequent mechanical vibrations produced by the washing machine during operation thereof.

[0008] Valve element movement capabilities issues may also cause more serious drawbacks, especially in solutions, such as that disclosed in EP2503050, wherein the valve element is operated within a meshed filter element. Indeed, being substantially freely movable within the filter element, the valve element, especially during its ascending movement, may experience friction with, until getting jammed into, the filter element mesh, so that the valve element may be not allowed to complete its ascending movement.

[0009] Applicant has faced the problem of devising a satisfactory solution able to overcome the above-discussed, as well as other, drawbacks.

[0010] In particular, one or more aspects of the solution according to specific embodiments of the invention are set out in the independent claims, with advantageous features of the same solution that are indicated in the dependent claims (with any advantageous feature provided with reference to a specific aspect of the solution according to an embodiment of the invention that applies *mutatis mutandis* to any other aspect thereof).

[0011] An aspect of the solution according to one or more embodiments of the invention relates to a laundry washing machine. The laundry washing machine comprises a tub for containing treatment liquids, the tub comprising a sump fluidly connected or connectable to a draining circuit of the washing machine, and a valve/filter assembly adapted to be removably positioned in a filter seat provided in the sump for intercepting and filtering the treatment liquids while passing from said tub to said draining circuit. Said valve/filter assembly comprises:

a receptacle having an inlet for the access of the treatment liquids coming from the tub, and a filtering surface through which said treatment liquids coming from the tub can pass to said draining circuit, said filtering surface being adapted to retain within said receptacle foreign bodies entering said inlet,

a valve seat fixed or fixable to an open end of said receptacle, and

a valve element pivotally hinged to said valve seat so as to swing within the receptacle, when said valve seat is fixed to said receptacle, between a closed position in which the valve element abuts the valve seat, thereby preventing passage of liquid from said tub to said draining circuit, and an opened position in which the valve element is at least partially spaced from said valve seat, thereby allowing liquid to pass from said tub to said draining circuit trough said filtering surface of said receptacle.

[0012] According to an advantageous embodiment of the invention, the valve/filter assembly comprises a gasket element arranged in such a way to provide a watertight connection between said valve element and said valve seat in said closed position of said valve element.

[0013] According to an advantageous embodiment of the invention, said valve element comprises a rigid core on which said gasket element is over-injected.

[0014] According to an advantageous embodiment of the invention, said valve seat comprises a rigid frame on which said gasket element is over-injected.

[0015] According to an advantageous embodiment of the invention, said valve element is pivotally hinged to said valve seat by a resilient connection comprising said gasket element, a layer of resilient material at least partially over injected on a rigid core of said valve element, and at least one flexible connecting element made in a single piece construction with said gasket element and said layer of resilient material.

[0016] According to an advantageous embodiment of the invention, said valve element is made of a resilient material and is pivotally hinged to said valve seat by a resilient connection comprising said valve element, said gasket element, and at least one flexible connecting element made in a single piece construction with said gasket element and said valve element.

[0017] According to an advantageous embodiment of the invention, the valve seat further comprises at least one protruding member adapted to be removably associated with at least one corresponding housing of said valve element for pivotally hinging said valve element to said valve seat in a removable manner.

[0018] According to an advantageous embodiment of the invention, the at least one protruding member is made in a single piece construction with the gasket element.

[0019] According to an advantageous embodiment of the invention, said valve/filter assembly comprises at least one fixing element adapted to removably fix both said receptacle to said valve seat and said valve/filter assembly to said filter seat.

[0020] According to an advantageous embodiment of the invention, the at least one fixing element is mechanically coupled to said receptacle and is elastically deformable, elastic deformation of the at least one fixing element allowing insertion and snap-fit fixation of said receptacle in said filter seat.

[0021] According to an advantageous embodiment of the invention, the valve seat further comprises at least one slot for allowing passage of the at least one fixing element therethrough during fixation of said valve seat to said receptacle.

[0022] According to an advantageous embodiment of the invention, at least part of the valve seat is adapted to rest, upon positioning said valve/filter assembly in said filter seat, on an inner flange provided in the sump and delimiting the inlet of said filter seat. Said valve/filter assembly is positioned in said filter seat, and said at least one fixing element engages said inner flange for fixing

the valve/filter assembly in said filter seat.

[0023] According to an advantageous embodiment of the invention, said valve/filter assembly comprises a locking element adapted to take a locking position wherein it prevents removal of the fixation of said receptacle to said a valve seat and of the fixation of said valve/filter assembly to said filter seat.

[0024] According to an advantageous embodiment of the invention, the locking element comprises at least one cap member removably fixable to said valve seat.

[0025] According to an advantageous embodiment of the invention, the at least one cap member, in said locking position, covers said at least one slot and the at least one fixing element therethrough.

[0026] According to an advantageous embodiment of the invention, said valve element is provided with at least one wall that extends from a side of said valve element facing, in operation, the bottom of said receptacle, said at least one wall delimiting at least one air capturing chamber adapted to capture air thereby enhancing floating of said valve element.

[0027] Applicant has also found that the known solutions (featuring both valve and filter elements) are difficult to mount, especially as far as mounting of the valve element on the filter element and mounting of the filter element into the respective seat are concerned, and that known mounting solutions are unreliable (thus requiring frequent servicing) and inconvenient to practice (thus making servicing difficult).

[0028] Thus, in order to overcome these, as well as other drawbacks, another aspect of the invention relates to a washing machine comprising:

a tub for containing treatment liquids, the tub comprising a sump fluidly connected or connectable to a draining circuit of the washing machine, and
a valve/filter assembly adapted to be removably positioned in a filter seat provided in the sump for intercepting and filtering the treatment liquids while passing from said tub to said draining circuit, said valve/filter assembly comprising:

a filter element,
a valve seat fixed or fixable to an open end of said filter element,
a valve element pivotally hinged to said valve seat so as to swing within the filter element between closed and opened positions preventing and allowing, respectively, passage of the treatment liquids from said tub to said draining circuit, and
at least one elastically deformable fixing element mechanically coupled to said filter element, said at least one fixing element being allowed to pass, when a deforming force is applied thereto, through at least one slot of the valve seat and to engage said valve seat when said deforming force is released, and said valve/filter assembly being allowed to pass, when a deforming force is applied to said at least one fixing element, into said filter seat and to engage said filter seat when said deforming force is released.

Brief Description of the Drawings

[0029] These and other features and advantages of the solution according to one or more embodiments of the invention will be best understood with reference to the following detailed description, given purely by way of a non-restrictive indication, to be read in conjunction with the accompanying drawings (wherein corresponding elements are denoted with equal or similar references, and their explanation is not repeated for the sake of exposition brevity). In this respect, it is expressly understood that the figures are not necessarily drawn to scale (with some details that may be exaggerated and/or simplified) and that, unless otherwise indicated, they are simply used to conceptually illustrate the described structures and procedures. In particular:

Figure 1 shows a sectional side view of a washing machine according to an embodiment of the invention;
Figure 2A shows an exploded perspective side view of a valve/filter assembly according to an embodiment of the invention;
Figures 2B and **2C** show front and sectional side views, respectively, of the valve/filter assembly in a fitted condition, according to an embodiment of the invention;
Figure 2D shows sectional views of a floating valve of the valve/filter assembly in opened and closed positions, according to an embodiment of the invention;
Figure 2E shows perspective assembled and exploded bottom views of a floating valve/valve seat group of the valve/filter assembly, according an embodiment of the invention;
Figure 2F shows perspective side views of the valve/filter assembly in full-closed and full-opened conditions, according to an embodiment of the invention, and
Figure 2G shows side and perspective side views of a valve seat/locking element of the valve/filter assembly in engaged and disengaged conditions, according to an embodiment of the invention.

Detailed description of preferred embodiments

[0030] With reference to the drawings, **Figure 1** shows a sectional side view of a washing machine **100,** for example for domestic use, according to an embodiment of the invention. The washing machine may be a "simple" washing machine, *i.e.* a washing machine that can only wash and rinse laundry, or a washing-drying machine, *i.e.* a washing machine that can also dry laundry. As exemplary illustrated, the washing machine **100** is of the

front-loading type (anyway, it should be apparent from the following description that washing machines of the top-loading type may also benefit from the invention).

[0031] The washing machine **100** preferably comprises a substantially parallepiped-shaped cabinet **105,** which is apt to contain (*e.g.,* hydraulic, electronic and/or electromechanical) components for allowing washing machine operation - only the relevant ones for understanding the invention being discussed in the following.

[0032] In this respect, the washing machine **100** comprises, within the cabinet **105,** a rotating, preferably perforated, drum **110** (*e.g.,* substantially cylindrical-shaped) configured to rotate for tumbling laundry loaded therein.

[0033] The drum **110** is enclosed within a washing tub **115,** preferably hollow-cylinder shaped, which is adapted to enclose the drum **110** and to contain treatment liquids (*e.g.,* washing water, detergent-water solutions, or rinsing water) for laundry treatment. The tub **115** comprises, e.*g.* at a bottom thereof, a sump **120** for canalizing the treating liquids thereinto (and allowing them to be drained, as discussed herebelow).

[0034] The sump **120** is fluidly connected or connectable to a draining circuit **125** of the washing machine **100,** which is adapted to drain the treatment liquids (coming from the tub **115,** through the sump **120)** to the sewer network (not shown) - or to a treatment liquids re-circulating circuit of the washing machine **100** (not shown).

[0035] The draining circuit **125** preferably comprises a motor driven pump **130,** preferably arranged downstream the sump **120,** for promoting the draining of the treatment liquids, and a draining hose **135,** preferably provided downstream the pump **130,** for draining the treatment liquids into the sewer network (and/or to the treatment liquids re-circulating circuit, when provided). The drain hose **135** advantageously comprises at least a substantially vertical part **135a** extending at least partially at a height higher than the pump **130.**

[0036] Advantageously, an appliance door **140** is provided (*e.g.,* at a front panel of the cabinet **105,** in the illustrated example) for accessing the drum **110.**

[0037] According to the proposed invention, a valve/filter assembly **145** adapted to be removably positioned/fitted in the sump **120** is provided for intercepting and filtering the treatment liquids while passing from the tub **115** to the draining circuit **125.**

[0038] As shown in **Figure 1** (and better detailed in the following), the valve/filter assembly **145** is adapted to be removably positioned/fitted in a filter seat **150** of the sump **120.** Preferably, the filter seat **150** comprises a sump inner flange $\mathbf{150_F}$**,** *e.g.* horizontally extending from vertical side walls of the sump **120,** and a seat opening (delimited by said sump inner flange $\mathbf{150_F}$**)** astride which the valve/filter assembly **145** is positioned.

[0039] Broadly speaking, as will be progressively explained in the following while discussing embodiments of the invention, the proposed valve/filter assembly **145** is configured to efficiently control (*i.e.,* prevent or allow) passage of the treatment liquids (through an inlet thereof) from the tub **115** to the draining circuit **125** during washing machine **100** operation, while filtering the treatment liquids, when passage thereof is allowed, from possible foreign bodies and/or lint.

[0040] As illustrated in **Figure 1,** the washing machine **100** further comprises one or more lifters arranged within the drum **110** for turning laundry, such as the lifters **155,160.** The lifter **160** is advantageously additionally adapted for easy removal and insertion of the valve/filter assembly **145** (*e.g.* for maintenance, replacement and/or other servicing operations). In this respect, the lifter **160** is preferably provided with a fixed, hollow lifter base $\mathbf{160_B}$ arranged on (*i.e.,* whose hollow matches) a drum opening $\mathbf{110_{OP}}$**,** and with an openable (as illustrated), or removable, lifter lid $\mathbf{160_L}$ for selectively covering/uncovering the lifter base $\mathbf{160_B}$ (and, hence, the hollow thereof and the drum opening $\mathbf{110_{OP}}$**).** Thus, in the considered example, access to the valve/filter assembly **145** is easily allowed by opening the appliance door **140,** aligning the lifter **160** (and, hence, the drum opening $\mathbf{110_{OP}}$**)** to the sump **120,** and lifting (or removing) the lifter lid $\mathbf{160_L}$**.**

[0041] Turning now to **Figure 2A,** it shows an exploded perspective side view of the valve/filter assembly **145** according to an embodiment of the invention. For the sake of description ease, such figure will be discussed together with **Figures 2B-2G.**

[0042] The valve/filter assembly **145** comprises a valve element (*e.g.,* a floating valve) **205** for allowing/preventing passage of the treatment liquids from the tub **115** to the draining circuit **125** during washing machine **100** operation, and a filter element **210** for filtering foreign bodies and/or lint from the treatment liquids.

[0043] Advantageously, in order to ensure the closure of the floating valve **205,** at the beginning of a washing phase, after filling the washing tub **115** with water, the pump **130** is activated for a short time interval long enough to allow some water to go up in the substantially vertical part **135a** of the draining hose **135,** but not long enough for allowing the spillage of this water from the draining hose **135,** and then the pump **130** is deactivated; in this way the water column present in the substantially vertical part **135a** of the draining hose **135** applies a pressure on the floating valve **205** in its closure direction, ensuring its closure.

[0044] The filter element **210** is preferably a basket, or meshed, filter element, namely it comprises a receptacle $\mathbf{210_R}$ having an inlet $\mathbf{210_I}$ for the access of the treatment liquids coming from the tub **115,** and a filtering surface $\mathbf{210_{FS}}$ through which said treatment liquids coming from the tub **115** can pass to said draining circuit **125,** with such a filtering surface $\mathbf{210_{FS}}$ that is adapted to retain within said receptacle $\mathbf{210_R}$ foreign bodies entering the inlet $\mathbf{210_I}$**.**

[0045] The receptacle $\mathbf{210_R}$ is preferably made of a material exhibiting both resilient deformation capabilities (by resilient deformation meaning that when forces causing deformation are no longer exerted, natural return to original shape takes place) and rigidity properties (here-

inafter referred to as semi-rigid material for differentiating it from a rigid material having no, or negligible, resilient deformation capabilities, and from a resilient material having no, or negligible, rigidity properties), and preferably features a top open end being larger, along a longitudinal direction **X,** than the seat opening. Thus, engagement by frictional contact between the receptacle $\mathbf{210_R}$ and the sump inner flange $\mathbf{150_F}$ can be established (as discussed below).

[0046] The receptacle $\mathbf{210_R}$**,** preferably made of low-density polyethylene, polypropylene, polycarbonate and/or other similar plastics, preferably features, from the open end thereof to a bottom end thereof, a (*e.g.,* rounded) progressively narrowing shaping, exception made for one ore more (*e.g.*, two) projecting portions $\mathbf{210_{P1}}$**,**$\mathbf{210_{P2}}$ (projecting along the longitudinal direction **X).** Preferably, the projecting portions $\mathbf{210_{P1}}$**,**$\mathbf{210_{P2}}$ are made of a semi-rigid material, more preferably they are made of the same material as the receptacle $\mathbf{210_R}$**,** and even more preferably they are made in a single piece construction with it. As visible in **Figures 2B** and **2C,** the projecting portions $\mathbf{210_{P1}}$**,**$\mathbf{210_{P2}}$ that, thanks to resiliency thereof, deform to a certain extent upon passage through the seat opening, abut against the sump inner flange $\mathbf{150_F}$ after such a passage has taken place, thus providing a clamping action and effectively preventing involuntary valve/filter assembly **145** unfitting from the filter seat **150** (*e.g.,* due to water column push action).

[0047] The valve/filter assembly **145** also comprises a valve seat **215,** preferably comprising a rigid (*e.g.,* plastics such as high-density polyethylene, or metal) or semi-rigid frame $\mathbf{215_F}$**,** and fixed or fixable to the open end of the receptacle $\mathbf{210_R}$**.**

[0048] The valve seat **215** is preferably elongated ring-shaped (whose central hole advantageously defines the inlet of the valve/filter assembly **145** selectively obstructed by the floating valve **205,** as discussed below), and is preferably adapted to be hingedly arranged/mounted on the open end of the receptacle $\mathbf{210_R}$**.**

[0049] The valve seat **215** is, in use, operatively associated with (preferably, mechanically coupled to) the floating valve **205,** and floatably contained within the receptacle $\mathbf{210_R}$**.**

[0050] In this respect, the floating valve **205,** which may either comprise a rigid or semi-rigid core $\mathbf{205_C}$ onto which a layer of resilient material (not shown) is at least partially over injected, or which may be substantially (*i.e.,* approximately) completely made of a rigid, semi-rigid or resilient material, is pivotally hinged to the valve seat **215** so as to swing relative thereto between closed and opened positions.

[0051] Hinging of the floating valve **205,** as guiding it into a limited, guided rotational movement with respect to the valve seat **215,** makes floating valve **205** movement capabilities substantially unaffected, or at least much less affected than prior art solutions, by both presence of foreign bodies unavoidably accumulating in the receptacle $\mathbf{210_R}$ and mechanical vibrations unavoidably produced by washing machine operation. Moreover, hinging of the floating valve **205** avoids that the floating valve **205** experiences friction with, until getting jammed into, the receptacle $\mathbf{210_R}$ mesh. Furthermore, absence (or at least strong reduction) of vibrations and/or frictions affecting the floating valve **205,** provides noise reduction.

[0052] In the closed position of the floating valve (illustrated in the right drawing of **Figure 2D),** the floating valve **205,** pushed by the water column present in the draining circuit **125** downstream the floating valve **205,** abuts the valve seat **215** (thereby preventing passage of the treatment liquids from the tub **115** to the draining circuit **125).** Preferably, a gasket element **220** is arranged in such a way to provide a watertight connection between the floating valve **205** and the valve seat **215** in the closed position. The gasket element **220** is preferably provided between (at least part of) a lower surface of the valve seat **215** facing (in use) the floating valve **205** and the receptacle $\mathbf{210_R}$**,** so that in the closed position the floating valve **205** abuts the valve seat 215 with at least partial interposition of the gasket element **220.** In order to ensure good and firm adherence upon floating valve **205** closure (thus compensating manufacturing tolerances and ensuring hydraulic sealing), the gasket element **220** is preferably made of a resilient material, being for example made of rubber, silicone or another resilient polymer. Indeed, due to different rigidity/resiliency between the rigid/semi-rigid material which the floating valve **205** (*e.g.,* the core $\mathbf{205_C}$ thereof) is made of, and the resilient material which the gasket element **220** is made of, highly effective friction and adherence upon their contact is experienced.

[0053] According to an advantageous embodiment, the gasket element **220** is over-injected (at least partially) on the valve seat frame $\mathbf{215_F}$**.** Additionally or alternatively, the gasket element **220** and the layer of resilient material at least partially over injected on the floating valve core $\mathbf{205_C}$ may be advantageously formed in a single piece construction. In a further advantageous embodiment, although not shown, a portion of the gasket element **220** is over-injected on the floating valve core $\mathbf{205_C}$ and another portion of the gasket element **220** is over-injected on the valve seat frame $\mathbf{215_F}$ (so as to have a distributed gasket element partially over-injected over and connecting the valve core $\mathbf{205_C}$ and the valve seat frame $\mathbf{215_F}$**).**

[0054] Thanks to provision of the gasket element **220** between the floating valve **205** and the valve seat **215,** noise reduction upon contact thereof is achieved, which further reduces overall noise of the washing machine **100.**

[0055] In the opened position of the floating valve **205** (illustrated in the left drawing of **Figure 2D),** the floating valve **205,** upon failing the push action thereon (*e.g.,* due to water column discharge caused by pump **130** activation) is at least partially spaced from the valve seat **215,** thereby allowing passage of the treatment liquids from the tub **115** to the draining circuit **125** through the filtering surface $\mathbf{210_{FS}}$ of the receptacle $\mathbf{210_R}$**.** Thus, the treat-

ment liquids allowed to pass when the floating valve **205** is in the opened position are then intercepted by filtering surface $\mathbf{210_{FS}}$ of the receptacle $\mathbf{210_R}$, and hence filtered from foreign bodies and/or lint, before being drained into the draining circuit **125.**

[0056] According to the exemplary considered embodiment, in order to achieve hinging of the floating valve **205** to the valve seat **215,** the floating valve **205** preferably comprises one or more, *e.g.* two housings $\mathbf{205_{H1}}$,$\mathbf{205_{H2}}$, whereas the valve seat **215** preferably comprises corresponding protruding members (preferably, two pegs) $\mathbf{220_{P1}}$,$\mathbf{220_{P1}}$ each one adapted to be fitted into a corresponding housing $\mathbf{205_{H1}}$,$\mathbf{205_{H2}}$.

[0057] Preferably, the pegs $\mathbf{220_{P1}}$,$\mathbf{220_{P1}}$ are made of a resilient material, more preferably they are made of the same material as the gasket element **220,** and even more preferably they are made in a single piece construction with it.

[0058] In a different advantageous embodiment, not illustrated, the pegs $\mathbf{220_1}$,$\mathbf{220_{P2}}$ (or other flexible connecting elements) can be advantageously made in a single piece construction with both the gasket element **220** and a layer of resilient material at least partially over injected on the valve rigid core $\mathbf{205_C}$, so that the gasket element **220,** the layer of resilient material, and the pegs $\mathbf{220_{P1}}$,$\mathbf{220_{P2}}$ form a resilient connection for pivotally hinging the floating valve **205** to the valve seat **215.**

[0059] In a further different advantageous embodiment, not illustrated, the floating valve **205** can be advantageously made of a resilient material, the floating valve **205,** the gasket element **220,** and the pegs $\mathbf{220_{P1}}$,$\mathbf{220_{P2}}$ may be made in a single piece construction, so as to form, as a whole, a resilient connection pivotally hinging the floating valve **205** to the valve seat **215.**

[0060] In the advantageous embodiment illustrated in attached drawings, thanks to pegs $\mathbf{220_{P1}}$,$\mathbf{220_{P1}}$ resiliency, fitting by interference between the pegs $\mathbf{220_{P1}}$,$\mathbf{220_{P1}}$ and the housings $\mathbf{205_{H1}}$,$\mathbf{205_{H2}}$ may be achieved by any proper sizing and/or shaping thereof. For example, as can be best appreciated in Figures **2D** and **2E,** each peg $\mathbf{220_{P1}}$,$\mathbf{220_{P1}}$ preferably features an (*e.g.*, enlarged) interference portion $\mathbf{220_{PE1}}$,$\mathbf{220_{PE2}}$ adapted to elastically deform while passing through the housings $\mathbf{205_{H1}}$,$\mathbf{205_{H2}}$, and to avoid, after its passage, that the floating valve **205** slides down along the pegs $\mathbf{220_{P1}}$,$\mathbf{220_{P1}}$.

[0061] Preferably, said fitting is with mechanical play, which compensates unavoidable mechanical tolerances and facilitates opening of the floating valve **205 -** indeed, thanks to their resiliency, pegs $\mathbf{220_{P1}}$,$\mathbf{220_{P1}}$ inflect due to floating valve **205** weight. Pegs $\mathbf{220_{P1}}$,$\mathbf{220_{P1}}$ inflection, apart from further facilitating opening of the floating valve **205,** also provides a dumping effect against damages and noise that contact between floating valve **205** and the receptacle $\mathbf{210_R}$ could cause.

[0062] Moreover, by choosing the pegs $\mathbf{220_{P1}}$,$\mathbf{220_{P1}}$ resilient and long enough to intercept at least part of the floating valve **205** when in the opened position, the pegs $\mathbf{220_{P1}}$,$\mathbf{220_{P1}}$ also feature a noise-suppression capability. Elongated pegs, such as the illustrated pegs $\mathbf{220_{P1}}$,$\mathbf{220_{P1}}$, are in fact adapted, in use, to be interposed between the floating valve **205** and the a receptacle $\mathbf{210_R}$, so as to soften (thereby suppressing noise caused by, and preserving integrity of) the floating valve **205** banging against the receptacle $\mathbf{210_R}$ when switching from closed to opened positions and during highly stressing operations of the washing machine **100.**

[0063] As can be appreciated in **Figure 2E,** the floating valve **205** preferably comprises a number *N* of air capturing chambers or cavities $\mathbf{205_{C}}_{i}$ (i=1, 2, ... *N,* with *N*=8 in the example at issue) adapted to capture air for efficient floating thereof. In fact, during closing of the floating valve **205,** water column pushes air contained within the discharge system upwards.

[0064] Cavities $\mathbf{205_{C}}_{i}$ are delimited by one or more walls extending from a rear side of the floating valve **205** (*i.e.,* the side intended to intercept the water column and the air from the discharge system) opposite to a front, abutment side thereof (*i.e.,* the side intended to abut, at least partly, against the valve seat **215** in the closed position). In the exemplary, not limiting, illustrated embodiment, a substantially circular outer wall $\mathbf{205_{OW}}$ and four rectilinear inner walls (globally denoted by the number reference $\mathbf{205_{IW}}$**)** crosspiece arranged within the outer wall $\mathbf{205_{OW}}$ are advantageously provided, which define eight cavities $\mathbf{205_{C1}}$-$\mathbf{205_{C8}}$ - however, a lower number of rectilinear inner walls, as well as different shaping and arrangement thereof, can be provided in alternative advantageous embodiments, not shown.

[0065] As mentioned above, the valve seat **215** (together with the associated floating valve **205)** is advantageously mounted, preferably hinged, on the open end of the receptacle $\mathbf{210_R}$, preferably by means of hinge elements $\mathbf{210_H}$ and $\mathbf{215_{H1}}$ provided, respectively, on the open end of the receptacle $\mathbf{210_R}$ (preferably, made in a single piece construction with it) and on the lower surface of the valve seat **215** (preferably, made in a single piece with it). Provision of the hinge elements $\mathbf{210_H}$,$\mathbf{215_{H1}}$ allows the floating valve **205**/valve seat **215** group to be pivotally rotated (about a corresponding hinge axis, not shown) onto the open end of the receptacle $\mathbf{210_R}$ (as illustrated in the top drawing of **Figure 2F),** and away from it (as illustrated in the bottom drawing of **Figure 2F),** so that opening and servicing of the valve/filter assembly **145** is allowed without having to completely detach the valve seat **215** therefrom.

[0066] The valve/filter assembly **145** further advantageously comprises one or more removable fixing elements adapted for removably fixing both said receptacle $\mathbf{210_R}$ to the valve seat **215** and the valve/filter assembly **145** to the filter seat **150** (as discussed herebelow). Preferably, said one or more removable fixing elements comprise at least one lip $\mathbf{210_{L1}}$,$\mathbf{210_{L2}}$ provided at said receptacle $\mathbf{210_R}$ and advantageously elastically deformable in such a way to allow, by elastic deformation thereof, the insertion and the snap-fixing fixation of said receptacle $\mathbf{210_R}$ in said filter seat **150.**

[0067] In the advantageous exemplary illustrated embodiment, two lips 210_{L1},210_{L2} extend upwards from opposite sides of the open end of the receptacle 210_R (thus resulting substantially, *i.e.* approximately, parallel to each other), preferably (as illustrated) at the projecting portions 210_{P1},210_{P2}, respectively. Preferably, the lips 210_{L1},210_{L2} are made of a semi-rigid material, more preferably they are made of the same material as the receptacle 210_R, and even more preferably they are made in a single piece construction with it. Thus, upon exerting a slight force (*e.g.* a compression force) along the longitudinal direction **X** between lips 210_{L1},210_{L2}, the receptacle 210_R and the projecting portions 210_{P1},210_{P2} undergo a corresponding deformation that allows passage thereof through the seat opening, thereafter, upon releasing said force, the receptacle 210_R and the projecting portions 210_{P1},210_{P2}, as getting back to their natural shapes, come into contact with the sump inner flange 150_F (and occlude the seat opening, as illustrated in **Figures 2B** and **2C).**

[0068] As can be best appreciated in **Figure 2B** and in the top drawing of **Figure 2E,** at least a peripheral region of the valve seat **215** is preferably intended to contact the sump inner flange 150_F thus preventing further fitting of the valve/filter assembly **145** into the seat opening. Thus, the valve seat **215** (or at least part thereof) is advantageously adapted to rest, upon positioning said valve/filter assembly **145** in said filter seat **150,** on the sump inner flange 150_F, while the removable fixing elements (*i.e.,* the lips 210_{L1},210_{L2}) engage the sump inner flange 150_F for fixing of the valve/filter assembly **145** in the filter seat **150.**

[0069] Preferably, the gasket element **220** extends over the whole lower surface of the valve seat **215,** so that the valve seat **215** (*i.e.,* the peripheral region thereof) advantageously contacts the sump inner flange 150_F by interposition of the gasket element **220,** which greatly improves sealing properties.

[0070] As visible also in **Figure 2A,** the valve seat **215** preferably comprises one or more (*e.g.*, two) slots 215_{S1},215_{S2} adapted to allow passage of the lips 210_{L1},210_{L2} therethrough when the valve seat **215** is fixed to the receptacle 210_R (*e.g.,* in the advantageous embodiment illustrated in the attached figures, when the floating valve **205**/valve seat **215** group is pivotally rotated onto the open end of receptacle 210_R**).** Specifically, when a force is applied to the lips 210_{L1},210_{L2}, the lips 210_{L1},210_{L2} are allowed to pass through the slots 215_{S1},215_{S2} and to engage the valve seat **215** (by abutting against slots 215_{S1},215_{S2} wall) when said force is released (dually, as discussed above, the valve/filter assembly **145,** *i.e.,* the receptacle 210_R thereof, is allowed to pass, when a force is applied to the lips 210_{L1},210_{L2}, into the seat opening and to engage said filter seat **150** when said force is released).

[0071] As should be readily understood, slots 215_{S1},215_{S2} arrangement, shape and size correspond respectively to lips 210_{L1},210_{L2} arrangement, shape and size, and implicitly provide also a first indication about alignment and orientation of the valve seat **215** on the receptacle 210_R**).** In the advantageous example herein considered, the slots 215_{S1},215_{S2}, preferably rectangular-shaped, are arranged at opposite sides of the valve seat **215.**

[0072] Preferably, as illustrated in the same figures, alignment of the valve seat **215** on the receptacle 210_R is also assisted by a number of (*e.g.,* four) flaps 210_{F1}-210_{F4} (preferably made in a single piece construction with the receptacle 210_R, and arranged along, and preferably extending upwards from, the open end thereof) and by a number of (*e.g.,* four) corresponding wall portions 215_{W1},215_{W4} (preferably made in a single piece with the valve seat **215,** and preferably arranged along, and extending downwards from, the lower surface of the valve seat **215),** adapted to cooperate (*e.g.*, by slide contact) with each other.

[0073] The valve/filter assembly **145** further preferably comprises a locking element **225** adapted to be interlocked with the valve seat **215.**

[0074] The locking element **225** is preferably adapted to be locked on the valve seat **215** (*i.e.,* on an upper surface thereof opposite the lower surface) so as to press/push the valve seat **215** on the sump inner flange 150_F (and, especially, the gasket element portion therebetween), thus providing effective retaining and sealing actions. Preferably, the locking element **225** is made of a rigid or semi-rigid material, so as to provide effective pressing/pushing action and, hence, ensuring mechanical stability to the valve/filter assembly **145.**

[0075] Preferably, the locking element **225** is further adapted to prevent, in the locking position (shown in the top drawing of **Figure 2F** and in the bottom drawing of **Figure 2G),** removal of the fixation of the receptacle 210_R to said a valve seat **215** and of the fixation of said valve/filter assembly **145** to said filter seat **150.**

[0076] In order to achieve that, one or more (*e.g.*, two) cap members 225_{C1},225_{C2} removably fixable to said valve seat **215** are preferably provided for covering at least a part of the valve seat **215,** and even more preferably (as illustrated in **Figures 2A, 2B, 2C, 2D** and **2F)** the cap members 225_{C1},225_{C2} are shaped and sized for covering the slots 215_{S1},215_{S2} and the lips 210_{L1},210_{L2} therethrough. Thanks to the cap members 225_{C1},225_{C2}, accidental access to the lips 210_{L1},210_{L2} is prevented, so that fixation of the receptacle 210_R to the valve seat **215** and fixation of the valve/filter assembly **145** to the filter seat **150** is ensured.

[0077] Still more preferably, as can be best appreciated in **Figures 2A** and **2F,** each cap member 225_{C1},225_{C2} is adapted to be fitted into a corresponding peripheral recess 215_{SR1},215_{SR2} of the slot 215_{S1},215_{S2} exposing a corresponding region of the gasket element **220** underneath it. Thus, by advantageously making the cap members 225_{C1},225_{C2} of a rigid or semi-rigid material, high friction is experienced upon contact with the gasket element **220,** so that increased sealing action is

achieved, and treatment liquid leakages are prevented through the slots **215_{S1},215_{S2}.**

[0078] Preferably, as illustrated, the cap members **225_{C1},225_{C2}** are made in a single piece with the locking element **225,** so that easy covering is automatically achieved upon interlocking between the locking element **225** and the valve seat **215.**

[0079] Advantageously, the locking element **225** is shaped and sized so as not to obstruct or make it difficult the passage of the treatment liquids through the valve/filter assembly **145** (*i.e.,* through the inlet thereof). In this respect, as can be better appreciated in the bottom drawing of **Figure 2F,** the locking element **225** is preferably in the form of a shaft extending, along a longitudinal direction **Y** substantially orthogonal to the transversal direction **X,** across opposite side ends of the valve seat **215,** and preferably having, along the transversal direction **X,** a size lower than valve/filter assembly inlet size.

[0080] Preferably, as illustrated, the locking element **225** is hingedly mounted on the upper surface of the valve seat **215,** which allows unfitting, opening and servicing of the valve/filter assembly **145** without having to completely detach the locking element **225** from the valve seat **215** (as also visible in the bottom drawing of **Figure 2F).** In order to achieve that hinge elements **215_{H2}** and **225_{H}** are preferably provided on the upper surface of the valve seat **215** (preferably, made in a single piece with it) and as an end portion of the locking element **225,** respectively.

[0081] Interlocking between the locking element **225** and the valve seat **215** is preferably achieved by means of a snap-fit mechanism. As can be better appreciated in **Figures 2A, 2D, 2E, 2F** and **2G,** the snap-fit mechanism preferably comprises, at valve seat **215** side, a guiding element **215_{G}** provided with a housing (*e.g.*, a slot) **215_{GS},** and, at locking element **225** side (*e.g.*, opposite the hinge element **225_{H}),** a hand-grip element **225_{HG}** provided with a cantilevered portion **225_{HGc}.** As can be better appreciated in the close-up views of **Figure 2G,** the hand-grip element **225_{HG}** is preferably adapted to slide within the guiding element **215_{G}** until the cantilevered portion **225_{HGc}** snap-fit engages the guiding element slot **215_{GS}.** As should be readily understood, sizing and/or shaping of the snap-fit mechanism directly affect the pressing/pushing action the locking element **225** is able to impart on the valve seat **215** when interlocked to each other, thus directly affecting compression of the gasket portion between the valve seat **215** and the sump inner flange **150_{F},** and hence sealing action thereof against treatment liquids leakages.

[0082] Preferably, the guiding element **215_{G}** is made in a single piece construction with the valve seat **215,** and the hand-grip element **225_{HG}** is made in a single piece construction with the locking element **225.** In this case, as should be readily understood, at least one between the valve seat **215** and the locking element **225** is conveniently made of a semi-rigid material, so that (even slight) resiliency allows imparting a deformation causing the cantilevered portion **225_{HGc}** to snap-fit engage the guiding frame slot **215_{GS}** easily.

[0083] However, in the particular embodiment herein illustrated wherein the hand-grip element **225_{HG}** advantageously features an elbow-shaped portion, the valve seat **215** and the locking element **225** may instead be made both of a rigid material, as the elbow-shaped portion may advantageously give, alone, the hand-grip element **225_{HG}** with a sufficient degree of deformation capabilities.

Claims

1. Laundry washing machine **(100)** comprising:

a tub **(115)** for containing treatment liquids, the tub **(115)** comprising a sump **(120)** fluidly connected to a draining circuit **(125)** of the washing machine **(100),** and
a valve/filter assembly **(145)** adapted to be removably positioned in a filter seat **(150)** provided in the sump **(120)** for intercepting and filtering the treatment liquids while passing from said tub **(115)** to said draining circuit **(125),**
said valve/filter assembly **(145)** comprising:

- a receptacle **(210_{R})** having an inlet **(210_{I})** for the access of the treatment liquids coming from the tub **(115),** and a filtering surface **(210_{FS})** through which said treatment liquids coming from the tub **(115)** can pass to said draining circuit **(125),** said filtering surface **(210_{FS})** being adapted to retain within said receptacle **(210_{R})** foreign bodies entering said inlet **(210_{I}),** and
- a valve seat **(215)** fixed to an open end of said receptacle **(210_{R}),** and
- a valve element **(205)** movable between a closed position in which the valve element **(205)** abuts the valve seat **(215),** thereby preventing passage of liquid from said tub **(115)** to said draining circuit **(125),** and an opened position in which the valve element **(205)** is at least partially spaced from said valve seat **(215),** thereby allowing liquid to pass from said tub **(115)** to said draining circuit **(125)** through said filtering surface **(210_{FS})** of said receptacle **(210_{R}),**
characterized in that

the valve element **(205)** is pivotally hinged to said valve seat **(215)** so as to swing within the receptacle **(210_{R}),** when said valve seat **(215)** is fixed to said receptacle **(210_{R}),** between said closed and opened positions.

2. Laundry washing machine **(100)** according to Claim

1, wherein the valve/filter assembly **(145)** comprises a gasket element **(220)** arranged in such a way to provide a watertight connection between said valve element **(205)** and said valve seat **(215)** in said closed position of said valve element **(205).**

3. Laundry washing machine **(100)** according to Claim 2, wherein said valve element **(205)** comprises a rigid core **(205_C)** on which said gasket element **(220)** is over-injected.

4. Laundry washing machine **(100)** according to Claim 2, wherein said valve seat **(215)** comprises a rigid frame **(215_F)** on which said gasket element **(220)** is over-injected.

5. Laundry washing machine **(100)** according to Claim 3 or 4, wherein said valve element **(205)** is pivotally hinged to said valve seat **(215)** by a resilient connection comprising said gasket element **(220),** a layer of resilient material at least partially over injected on a rigid core **(205_C)** of said valve element **(205),** and at least one flexible connecting element **(220_{P1},220_{P2})** made in a single piece construction with said gasket element **(220)** and said layer of resilient material.

6. Laundry washing machine **(100)** according to Claim 3 or 4, wherein said valve element **(205)** is made of a resilient material and is pivotally hinged to said valve seat **(215)** by a resilient connection comprising said valve element **(205),** said gasket element **(220),** and at least one flexible connecting element **(220_{P1},220_{P2})** made in a single piece construction with said gasket element **(220)** and said valve element **(205).**

7. Laundry washing machine **(100)** according to any Claim from 1 to 4, wherein the valve seat **(215)** further comprises at least one protruding member **(220_{P1},220_{P2})** adapted to be removably associated with at least one corresponding housing **(205_{H1},205_{H2})** of said valve element **(205)** for pivotally hinging said valve element **(205)** to said valve seat **(215)** in a removable manner.

8. Laundry washing machine **(100)** according to Claim 7 when depending on Claim 2 or 4, wherein the at least one protruding member **(220_{P1},220_{P2})** is made in a single piece construction with the gasket element **(220).**

9. Laundry washing machine **(100)** according to any of the preceding Claims, wherein said valve/filter assembly **(145)** comprises at least one fixing element **(210_{L1},210_{L2})** adapted to removably fix both said receptacle **(210_R)** to said valve seat **(215)** and said valve/filter assembly **(145)** to said filter seat **(150).**

10. Laundry washing machine **(100)** according to Claim 9, wherein the at least one fixing element **(210_{L1},210_{L2})** is mechanically coupled to said receptacle **(210_R)** and is elastically deformable, elastic deformation of the at least one fixing element **(210_{L1},210_{L2})** allowing insertion and snap-fit fixation of said receptacle **(210_R)** in said filter seat **(150).**

11. Laundry washing machine **(100)** according to Claim 9 or 10, wherein the valve seat **(215)** further comprises at least one slot **(215_{S1},215_{S2})** for allowing passage of the at least one fixing element **(210_{L1},210_{L2})** therethrough during fixation of said valve seat **(215)** to said receptacle **(210_R).**

12. Laundry washing machine **(100)** according to any Claim from 9 to 11, wherein at least part of the valve seat **(215)** is adapted to rest, upon positioning said valve/filter assembly **(145)** in said filter seat **(150),** on an inner flange **(150_F)** provided in the sump **(120)** and delimiting the inlet of said filter seat **(150),** wherein when said valve/filter assembly **(145)** is positioned in said filter seat **(150),** said at least one fixing element **(210_{L1},210_{L2})** engaging said inner flange **(150_F)** for fixing the valve/filter assembly **(145)** in said filter seat **(150).**

13. Laundry washing machine **(100)** according to any of the preceding Claims, wherein said valve/filter assembly **(145)** comprises a locking element **(225)** adapted to take a locking position wherein it prevents removal of the fixation of said receptacle **(210_R)** to said a valve seat **(215)** and of the fixation of said valve/filter assembly **(145)** to said filter seat **(150).**

14. Laundry washing machine **(100)** according to Claim 13, wherein the locking element **(225)** comprises at least one cap member **(225_{C1},225_{C2})** removably fixable to said valve seat **(215).**

15. Laundry washing machine **(100)** according to Claim 14 when depending on Claim 11, wherein the at least one cap member **(225_{C1},225_{C2}),** in said locking position, covers said at least one slot **(215_{S1},215_{S2})** and the at least one fixing element **(210_{L1},210_{L2})** therethrough.

Patentansprüche

1. Waschmaschine **(100),** umfassend:

einen Becher **(115)** zum Aufnehmen von Behandlungsflüssigkeiten, wobei der Becher **(115)** einen Sammelbehälter **(120)** umfasst, der fluid mit einem Ablaufkreis **(125)** der Waschmaschine **(100)** verbunden ist, und eine Ventil/Filtergruppe **(145),** die dafür ausgelegt ist, entfernbar

in einem Filtersitz **(150)** angeordnet zu werden, der im Sammelbehälter **(120)** um Abfangen und Filtern der Behandlungsflüssigkeiten vorgesehen ist, während sie vom Becher **(115)** zum Ablaufkreis **(125)** laufen,
wobei die Ventil/Filtergruppe **(145)** umfasst:

- einen Behälter **(210_R),** der einen Einlass **(210_I)** für den Zutritt der Behandlungsflüssigkeiten, die vom Becher **(115)** kommen, und eine Filterfläche **(210_{FS})** hat, durch die die Behandlungsflüssigkeiten, die vom Becher **(115)** kommen, zum Ablaufkreis **(125)** strömen können, wobei die Filterfläche **(210_{FS})** dafür ausgelegt ist, Fremdkörper, die in den Zugang **(210_I)** eintreten, innerhalb des Behälters **(210_R)** zurückzuhalten, und
- einen Ventilsitz **(215),** der am offenen Ende des Behälters **(210_R)** befestigt ist, und
- ein Ventilelement **(205),** das zwischen einer geschlossenen Position, bei der das Ventilelement **(205)** am Ventilsitz **(215)** anliegt, wodurch der Durchlauf von Flüssigkeit vom Becher **(115)** zum Ablaufkreis **(125)** verhindert wird, und einer geöffneten Position beweglich ist, in der das Ventilelement **(205)** zumindest teilweise einen Abstand zum Ventilsitz **(215)** hat, wodurch Flüssigkeit vom Becher **(115)** zum Ablaufkreis **(125)** durch die Filterfläche **(210_{FS})** des Behälters **(210_R)** fließen kann,

dadurch gekennzeichnet, dass
das Ventilelement **(205)** schwenkbar am Ventilsitz **(215)** gelagert ist, um so innerhalb des Behälters **(210_R),** wenn der Ventilsitz **(215)** am Behälter **(210_R)** befestigt ist, zwischen geschlossenen und offenen Positionen zu schwingen.

2. Waschmaschine **(100)** nach Anspruch 1, wobei die Ventil/Filtergruppe **(145)** ein Dichtungselement **(220)** umfasst, das so angeordnet ist, dass es für eine wasserdichte Verbindung zwischen dem Ventilelement **(205)** und dem Ventilsitz **(215)** in der geschlossenen Position des Ventilelementes **(205)** sorgt.

3. Waschmaschine **(100)** nach Anspruch 2, wobei das Ventilelement **(205)** einen starren Kern **(205_C)** umfasst, auf den das Dichtungselement **(220)** übergespritzt ist.

4. Waschmaschine **(100)** nach Anspruch 2, wobei der Ventilsitz **(215)** einen starren Rahmen **(215_F)** umfasst, auf den das Dichtungselement **(220)** übergespritzt ist.

5. Waschmaschine **(100)** nach Anspruch 3 oder 4, wobei das Ventilelement **(205)** schwenkbar am Ventilsitz **(215)** durch eine elastische Verbindung befestigt ist, die das Dichtungselement **(220)** umfasst, eine Schicht von belastbarem Material, das zumindest teilweise auf einen starren Kern **(205_C)** des Ventilelementes **(205)** übergespritzt ist, und mindestens ein flexibles Verbindungselement **(220_{P1},220_{P2}),** das in einer einteiligen Konstruktion mit dem Dichtungselement **(220)** und der Schicht aus elastischem Material hergestellt ist.

6. Waschmaschine **(100)** nach Anspruch 3 oder 4, wobei das Ventilelement **(205)** aus einem elastischen Material hergestellt ist und schwenkbar am Ventilsitz **(215)** durch eine elastische Verbindung befestigt ist, die das Ventilelement **(205),** das Dichtungselement **(220)** und mindestens ein flexibles Verbindungselement **(220_{P1},220_{P2})** umfasst, das in einer einteiligen Konstruktion mit dem Dichtungselement **(220)** und dem Ventilelement **(205)** hergestellt ist.

7. Waschmaschine **(100)** nach einem der Ansprüche 1 bis 4, wobei der Ventilsitz **(215)** ferner mindestens ein vorstehendes Element **(220_{P1},220_{P2})** umfasst, das dafür ausgelegt ist, lösbar mit mindestens einem entsprechenden Gehäuse **(205_{H1},205_{H2})** des Ventilelementes **(205)** verbunden ist, um das Ventilelement **(205)** schwenkbar am Ventilsitz **(215)** in einer abnehmbaren Weise zu befestigen.

8. Waschmaschine **(100)** nach Anspruch 7, wenn sie von Anspruch 2 oder 4 abhängt, wobei das mindestens eine vorragende Element **(220_{P1},220_{P2})** in einer einteiligen Konstruktion mit dem Dichtungselement **(220)** hergestellt ist.

9. Waschmaschine **(100)** nach einem der vorherigen Ansprüche, wobei die Ventil/Filtergruppe **(145)** mindestens ein Befestigungselement **(210_{L1},210_{L2})** umfasst, das dafür ausgelegt ist, sowohl den Behälter **(210_R)** am Ventilsitz **(215)** als auch die Ventil/Filtergruppe **(145)** am Filtersitz **(150)** lösbar zu befestigen.

10. Waschmaschine **(100)** nach Anspruch 9, wobei das mindestens eine Befestigungselement **(210_{L1},210_{L2})** mechanisch mit dem Behälter **(210_R)** verbunden ist und elastisch verformbar ist, wobei die elastische Verformung des mindestens einen Befestigungselementes **(210_{L1},210_{L2})** das Einführen und die Schnappmontage des Behälters **(210_R)** in den Filtersitz **(150)** ermöglicht.

11. Waschmaschine **(100)** nach Anspruch 9 oder 10, wobei der Ventilsitz **(215)** ferner mindestens einen Schlitz **(215_{S1},215_{S2})** umfasst, um den Durchgang des mindestens einen Befestigungselementes **(210_{L1},210_{L2})** durch denselben während der Befes-

tigung des Ventilsitzes **(215)** am Behälter **(210_R)** zu ermöglichen.

12. Waschmaschine **(100)** nach einem der Ansprüche 9 bis 11, wobei mindestens ein Teil des Ventilsitzes **(215)** dafür ausgelegt ist, bei der Positionierung der Ventil/Filtergruppe **(145)** im Filtersitz **(150)** auf einem Innenflansch **(150_F)** zu ruhen, der im Sammelbehälter **(120)** vorgesehen ist und den Einlass des Filtersitzes **(150)** begrenzt, wobei, wenn die Ventil/Filtergruppe **(145)** im Filtersitz **(150)** positioniert ist, das mindestens eine Befestigungselement **(210_{L1},210_{L2})** in den Innenflansch **(150_F)** zum Befestigen der Ventil/Filtergruppe **(145)** im Filtersitz **(150)** eingreift.

13. Waschmaschine **(100)** nach einem der vorherigen Ansprüche, wobei die Ventil/Filtergruppe **(145)** ein Verriegelungselement **(225)** umfasst, das dafür ausgelegt ist, eine Verriegelungsposition einzunehmen, wobei es das Aufheben der Befestigung des Behälters **(210_R)** am Ventilsitz **(215)** und der Befestigung der Ventil/Filtergruppe **(145)** am Filtersitz **(150)** verhindert.

14. Waschmaschine **(100)** nach Anspruch 13, wobei das Verriegelungselement **(225)** mindestens ein Deckelelement **(225_{C1},225_{C2})** umfasst, das lösbar am Ventilsitz **(215)** befestigt werden kann.

15. Waschmaschine **(100)** nach Anspruch 14, wenn sie von Anspruch 11 abhängt, wobei das mindestens eine Deckelement **(225_{C1},225_{C2})** in der Verriegelungsposition mindestens einen Schlitz **(215_{S1},215_{S2})** und das mindestens eine Befestigungselement **(210_{L1},210_{L2})** durch es hindurch abdeckt.

Revendications

1. Lave-linge (100) comprenant :

une cuve (115) pour contenir les liquides de traitement, la cuve (115) comprenant un puisard (120) en communication fluidique avec un circuit de vidange (125) de la machine à laver (100), et un ensemble vanne/filtre (145) apte à être mis en place amovible dans un siège (150) de filtre disposé dans le puisard (120) pour intercepter et filtrer les liquides de traitement pendant qu'ils passent de ladite cuve (115) audit circuit de vidange (125),
ledit ensemble vanne/filtre (145) comprenant :

- un récipient (210_R) comportant une entrée (210_I) permettant l'accès des liquides de traitement venant de la cuve (115) et une surface filtrante (210_{FS}) à travers laquelle des liquides de traitement venant de la cuve (115) peuvent passer dans ledit circuit de vidange (125), ladite surface filtrante (210_{FS}) étant apte à retenir à l'intérieur dudit récipient (210_R) les corps étrangers pénétrant dans ladite entrée (210_I), et
- un siège (215) de vanne fixé à une extrémité ouverte dudit récipient (210_R), et
- un élément de vanne (205) mobile entre une position fermée dans laquelle l'élément de vanne (205) est en appui sur le siège (215) de vanne, empêchant de ce fait le passage de liquide de ladite cuve (115) audit circuit de vidange (125), et une position ouverte dans laquelle l'élément de vanne (205) est au moins partiellement espacé dudit siège (215) de vanne, permettant de ce fait au liquide de passer de ladite cuve (115) audit circuit de vidange (125) à travers ladite surface filtrante (210_{FS}) dudit récipient (210_R), **caractérisé en ce que** l'élément de vanne (205) est articulé pivotant sur ledit siège (215) de vanne de façon à osciller à l'intérieur du récipient (210_R), quand ledit siège (215) de vanne est fixé audit récipient (210_R), entre lesdites positions fermée et ouverte.

2. Lave-linge (100) selon la revendication 1, dans lequel l'ensemble vanne/filtre (145) comprend un élément de joint (220) disposé de façon à assurer un raccordement étanche entre ledit élément de vanne (205) et ledit siège (215) de vanne dans ladite position fermée dudit élément de vanne (205).

3. Lave-linge (100) selon la revendication 2, dans lequel ledit élément de vanne (205) comprend une âme (205_C) rigide sur laquelle est sur-injecté ledit élément de joint (220).

4. Lave-linge (100) selon la revendication 2, dans lequel ledit siège (215) de vanne comprend un cadre (215_F) rigide sur lequel est sur-injecté ledit élément de joint (220).

5. Lave-linge (100) selon la revendication 3 ou 4, dans lequel ledit élément de vanne (205) est articulé pivotant sur ledit siège (215) de vanne par une liaison élastique comprenant ledit élément de joint (220), une couche de matière élastique au moins partiellement sur-injectée sur l'âme (205_C) rigide dudit élément de vanne (205) et au moins un élément de raccordement (220_{P1}, 220_{P2}) flexible réalisé en une structure monobloc avec ledit élément de joint (220) et ladite couche de matière élastique.

6. Lave-linge (100) selon la revendication 3 ou 4, dans

lequel ledit élément de vanne (205) est fait d'une matière élastique et est articulé pivotant sur ledit siège (215) de vanne par une liaison élastique comprenant ledit élément de vanne (205), ledit élément de joint (220) et au moins un élément de raccordement (220_{P1}, 220_{P2}) flexible réalisé en une structure monobloc avec ledit élément de joint (220) et ledit élément de vanne (205).

7. Lave-linge (100) selon l'une quelconque des revendications 1 à 4, dans lequel le siège (215) de vanne comprend au moins un élément en saillie (220_{P1}, 220_{P2}) apte à être associé amovible à au moins un logement (205_{H1}, 205_{H2}) correspondant dudit élément de vanne (205) pour articuler pivotant ledit élément de vanne (205) audit siège (215) de vanne de manière amovible.

8. Lave-linge (100) selon la revendication 7 quand elle est subordonnée à la revendication 2 ou 4, dans lequel ledit élément en saillie (220_{P1}, 4220_{P2}) est réalisé en une structure monobloc avec l'élément de joint (220).

9. Lave-linge (100) selon l'une quelconque des revendications précédentes, dans lequel ledit ensemble vanne/filtre (145) comprend au moins un élément de fixation (210_{L1}, 210_{L2}) apte à fixer de façon amovible à la fois ledit récipient (210_R) audit siège (215) de vanne et ledit ensemble vanne/filtre (145) audit siège (150) de filtre.

10. Lave-linge (100) selon la revendication 9, dans lequel ledit élément de fixation (210_{L1}, 210_{L2}) est accouplé mécaniquement audit récipient (210_R) et est déformable élastiquement, la déformation élastique dudit élément de fixation (210_{L1}, 210_{L2}) permettant l'introduction et la fixation par encliquetage dudit récipient (210_R) dans ledit siège (150) de filtre.

11. Lave-linge (100) selon la revendication 9 ou 10, dans lequel ledit siège (215) de vanne comprend en outre au moins une fente (215_{S1}, 215_{S2}) pour permettre audit élément de fixation (210_{L1}, 210_{L2}) de le traverser pendant la fixation dudit siège (215) de vanne audit récipient (210_R).

12. Lave-linge (100) selon l'une quelconque des revendications 9 à 11, dans lequel au moins une partie du siège (215) de vanne est apte à reposer, lorsqu'on met en place ledit ensemble vanne/filtre (145) dans ledit siège (150) de filtre, sur un rebord intérieur (150_F) disposé dans le puisard (120) et délimitant l'entrée dudit siège (150) de filtre, dans lequel, quand ledit ensemble vanne/filtre (145) est mis en place dans ledit siège (150) de filtre, ledit élément de fixation (210_{L1}, 210_{L2}) entre en prise avec ledit rebord intérieur (150_F) pour fixer ledit ensemble vanne/filtre (145) dans ledit siège (150) de filtre.

13. Lave-linge (100) selon l'une quelconque des revendications précédentes, dans lequel ledit ensemble vanne/filtre (145) comprend un élément de verrouillage (225) apte à prendre une position de verrouillage dans laquelle il empêche de retirer la fixation dudit récipient (210_R) audit siège (215) de vanne et la fixation dudit ensemble vanne/filtre (145) audit siège (150) de filtre.

14. Lave-linge (100) selon la revendication 13, dans lequel l'élément de verrouillage (225) comprend au moins un élément de capuchon (225_{C1}, 225_{C2}) pouvant être fixé amovible audit siège (215) de vanne.

15. Lave-linge (100) selon la revendication 14 quand elle est subordonnée à la revendication 11, dans lequel ledit élément de capuchon (225_{C1}, 225_{C2}), dans ladite position de verrouillage, couvre ladite fente (215_{S1}, 215_{S2}) et ledit élément de fixation (210_{L1}, 210_{L2}) qui la traverse.

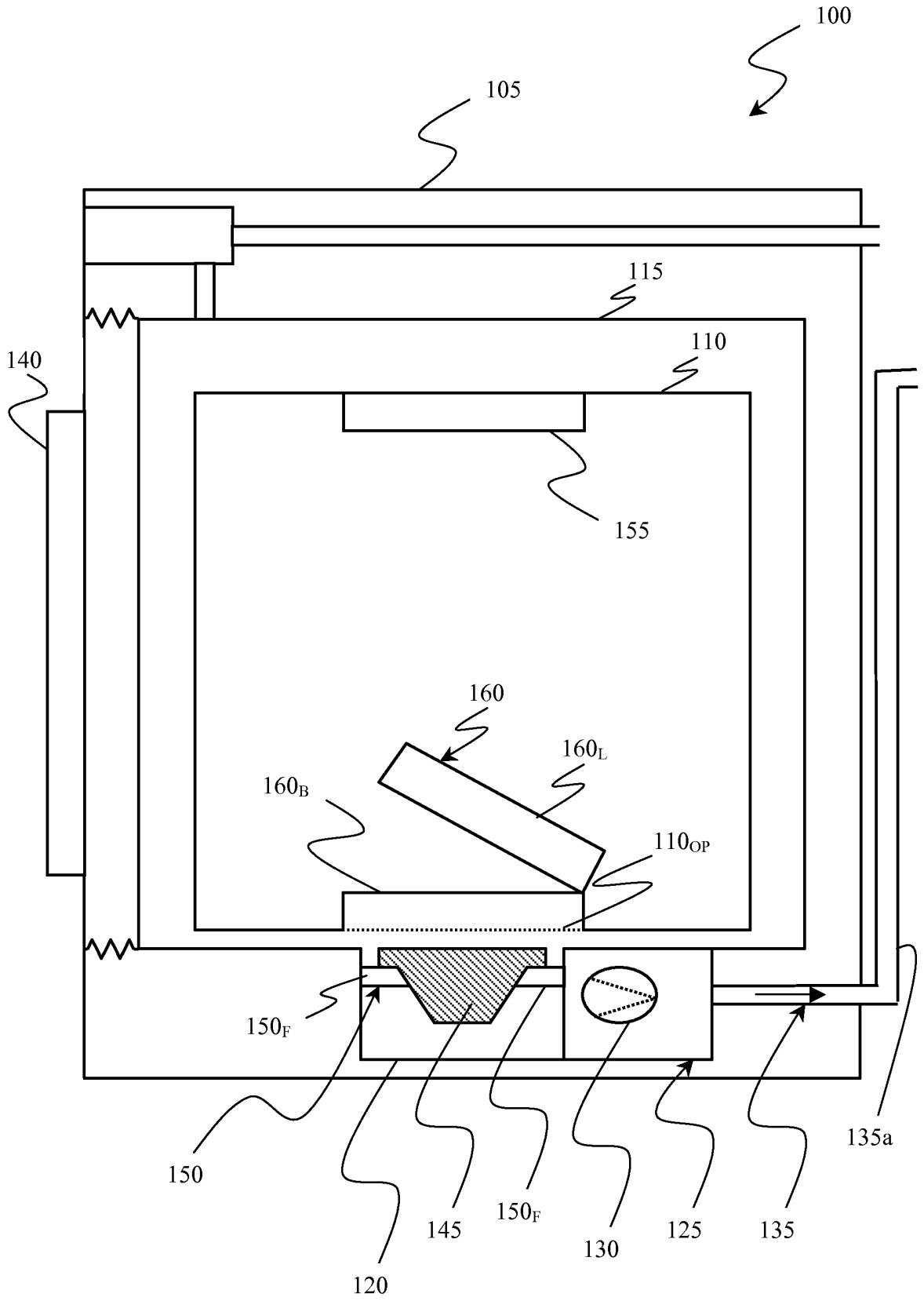
100
105
115
110
140
155
160
160_L
160_B
110_{OP}
150_F
150
145
150_F
130
125
135
135a
120

Figure 1

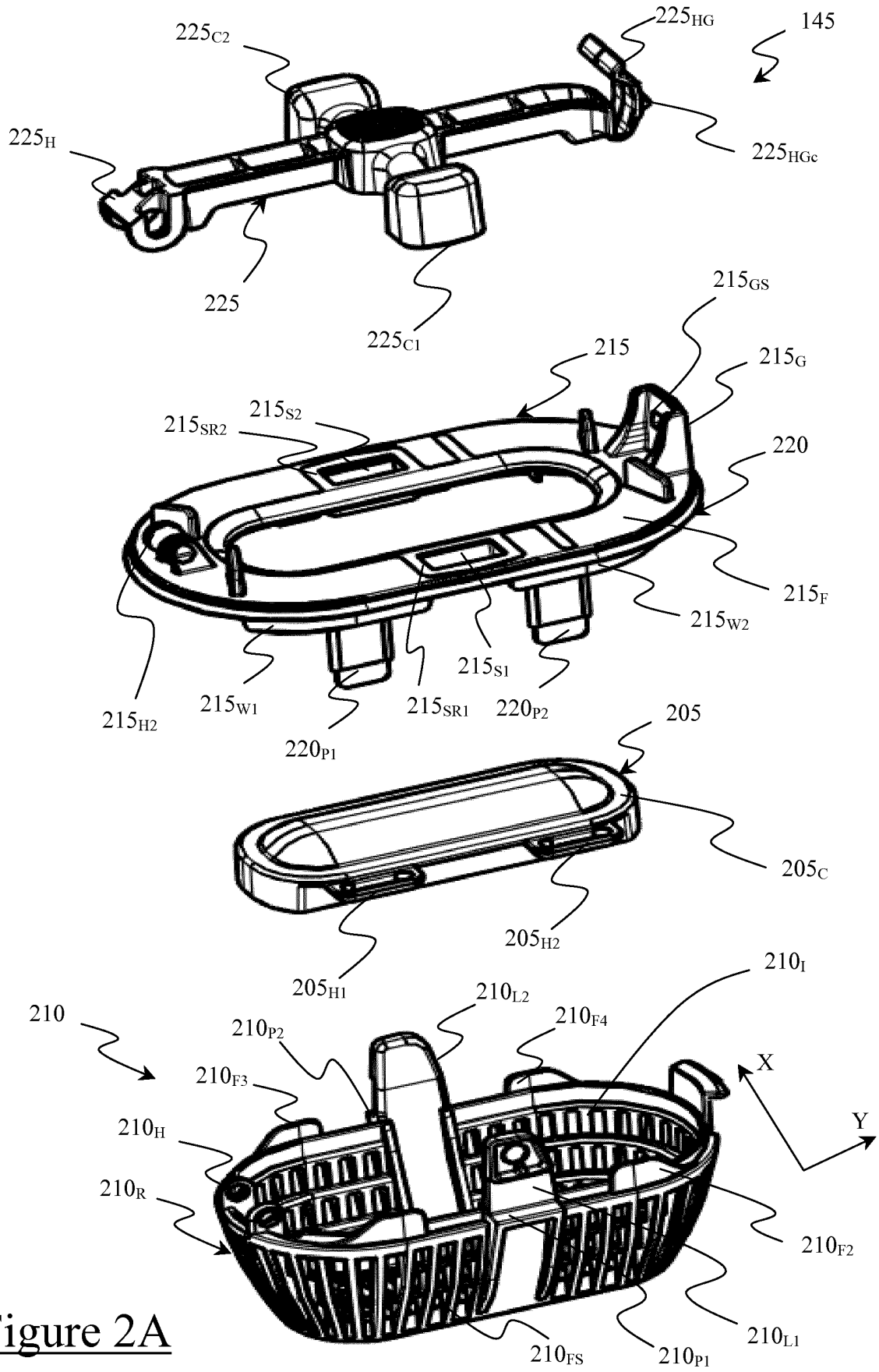
225C2
225HG
145
225H
225HGc
225
225C1
215GS
215
215G
215S2
215SR2
220
215F
215W2
215S1
215H2
215W1
215SR1
220P2
220P1
205
205C
205H2
205H1
210I
210L2
210
210P2
210F4
210F3
X
Y
210H
210R
210F2
210L1
210FS
210P1

Figure 2A

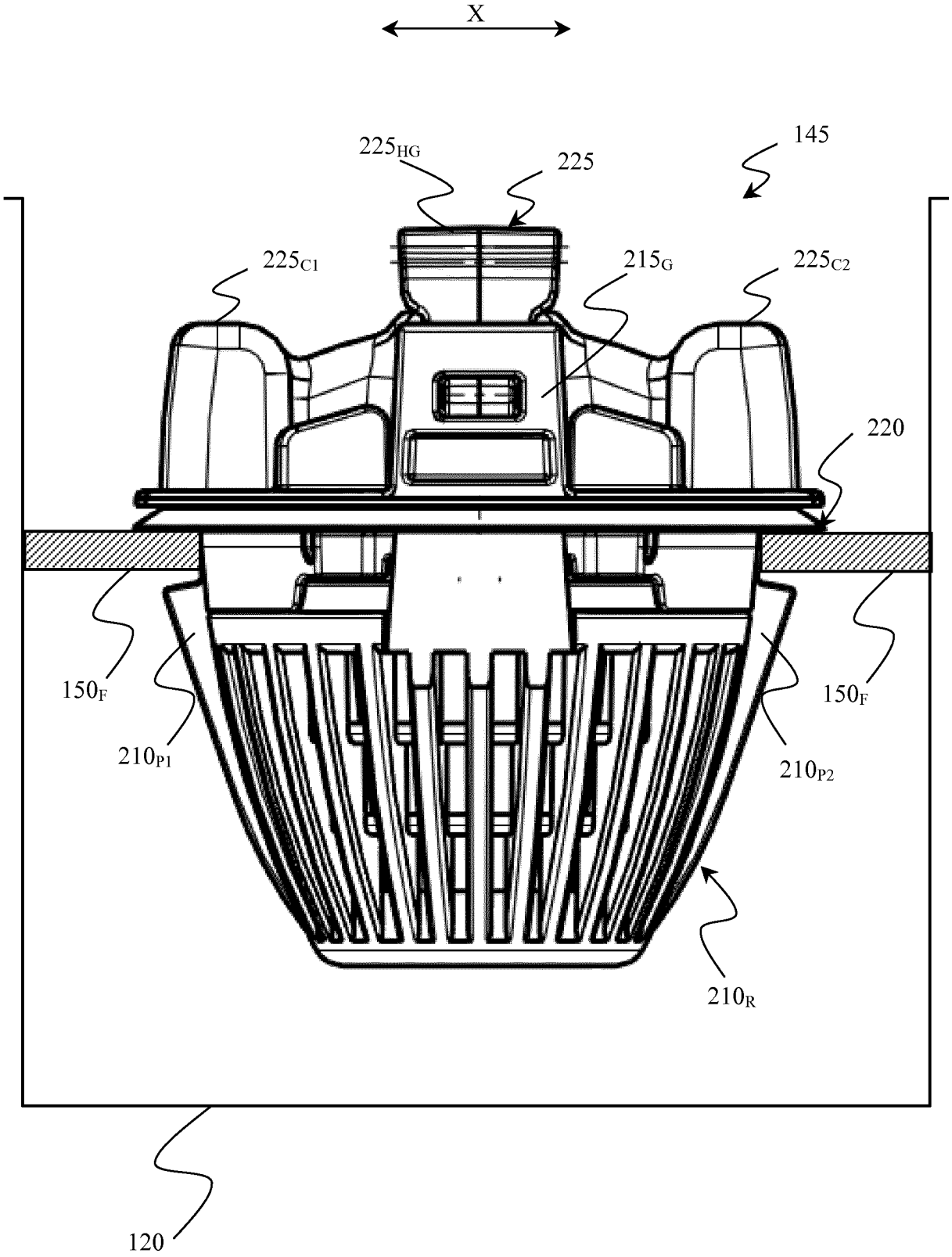
X
145
225HG
225
225C1
215G
225C2
220
150F
150F
210P1
210P2
210R
120

Figure 2B

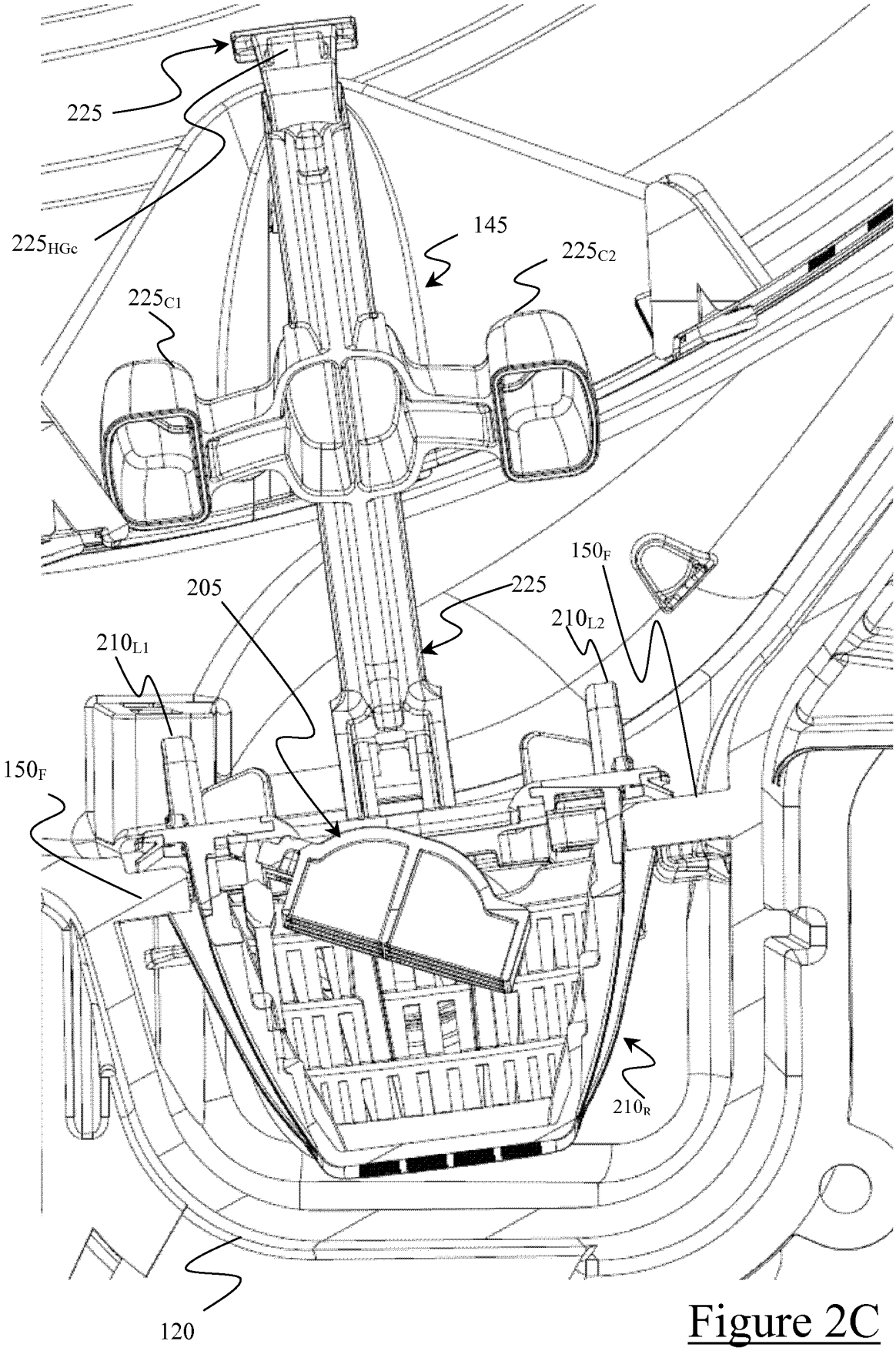
225
225HGc
145
225C2
225C1
150F
205
225
210L2
210L1
150F
210R
120

Figure 2C

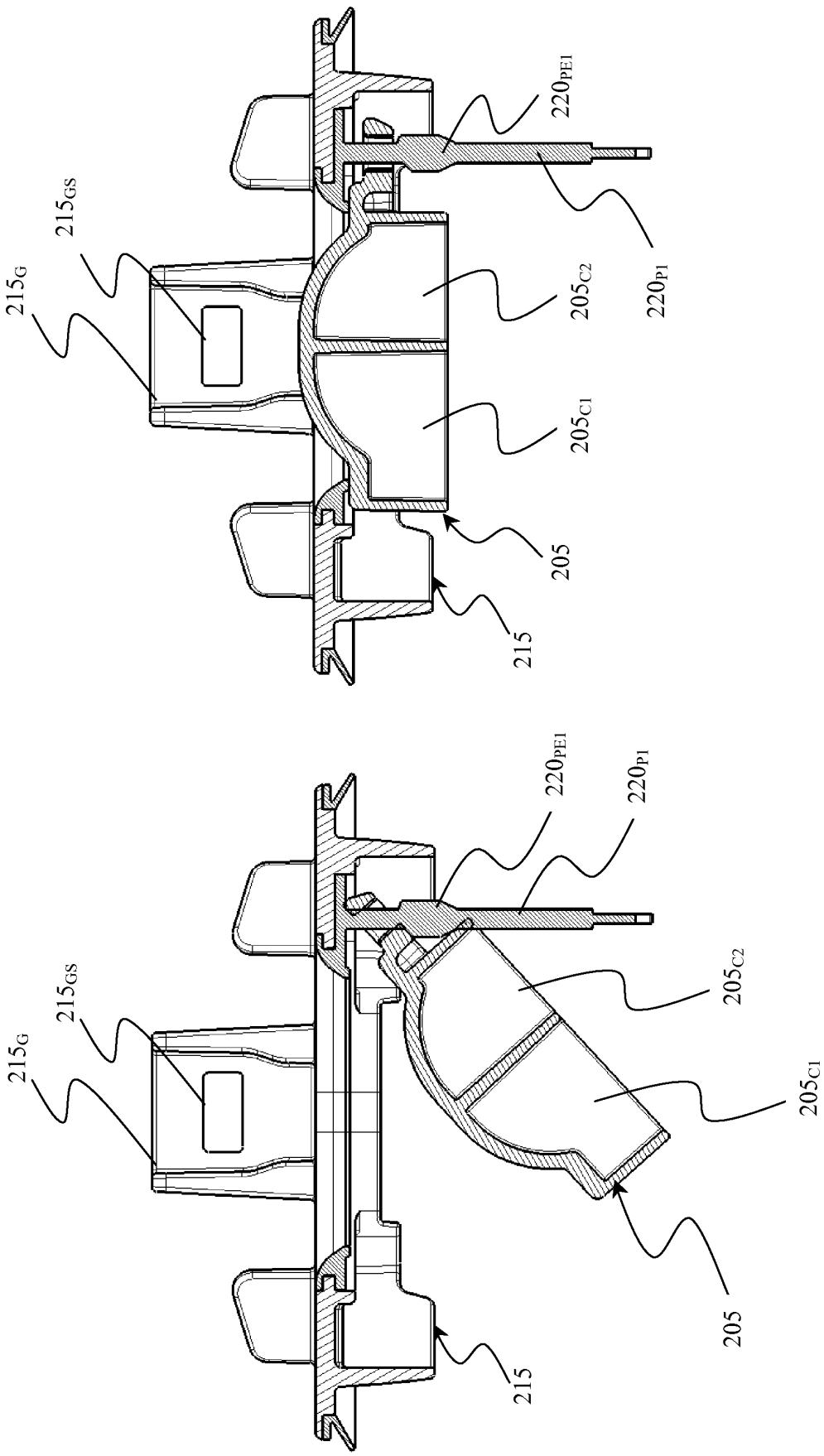
215G
215GS
220PE1
220P1
205C2
205C1
205
215
215G
215GS
220PE1
220P1
205C2
205C1
205
215

Figure 2D

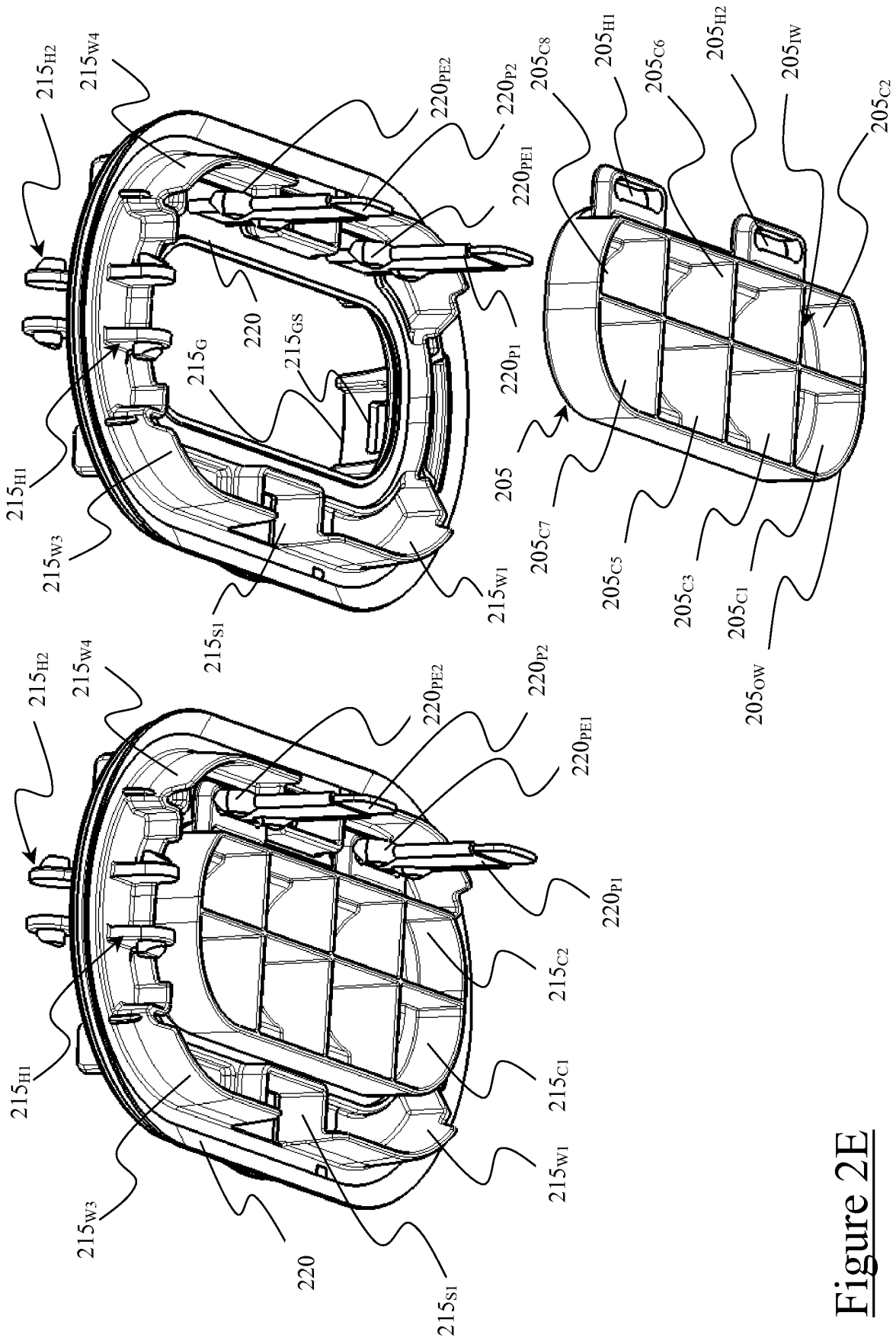
215H2
215W4
220PE2
220P2
205C8
205H1
205C6
205H2
205IW
205C2
220PE1
220
215G
215GS
220P1
205
215H1
215W3
215S1
215W1
205C7
205C5
205C3
205C1
205OW
215H2
215W4
220PE2
220P2
220PE1
220P1
215C2
215H1
215C1
215W1
215W3
220
215S1

Figure 2E

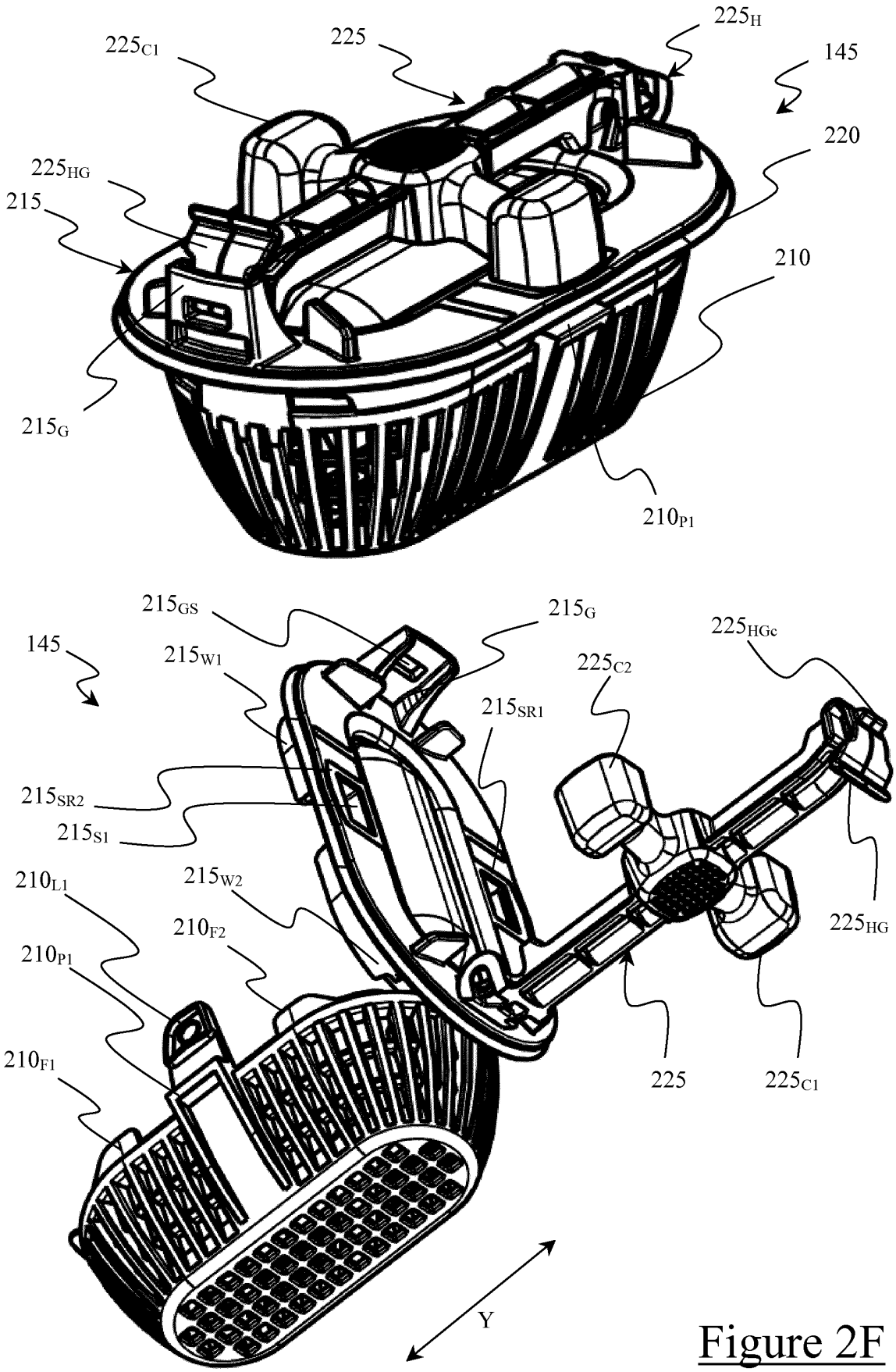
225H
225C1
225
145
220
225HG
215
210
215G
210P1
215GS
215G
225HGc
145
215W1
225C2
215SR1
215SR2
215S1
210L1
215W2
225HG
210F2
210P1
210F1
225
225C1
Y

Figure 2F

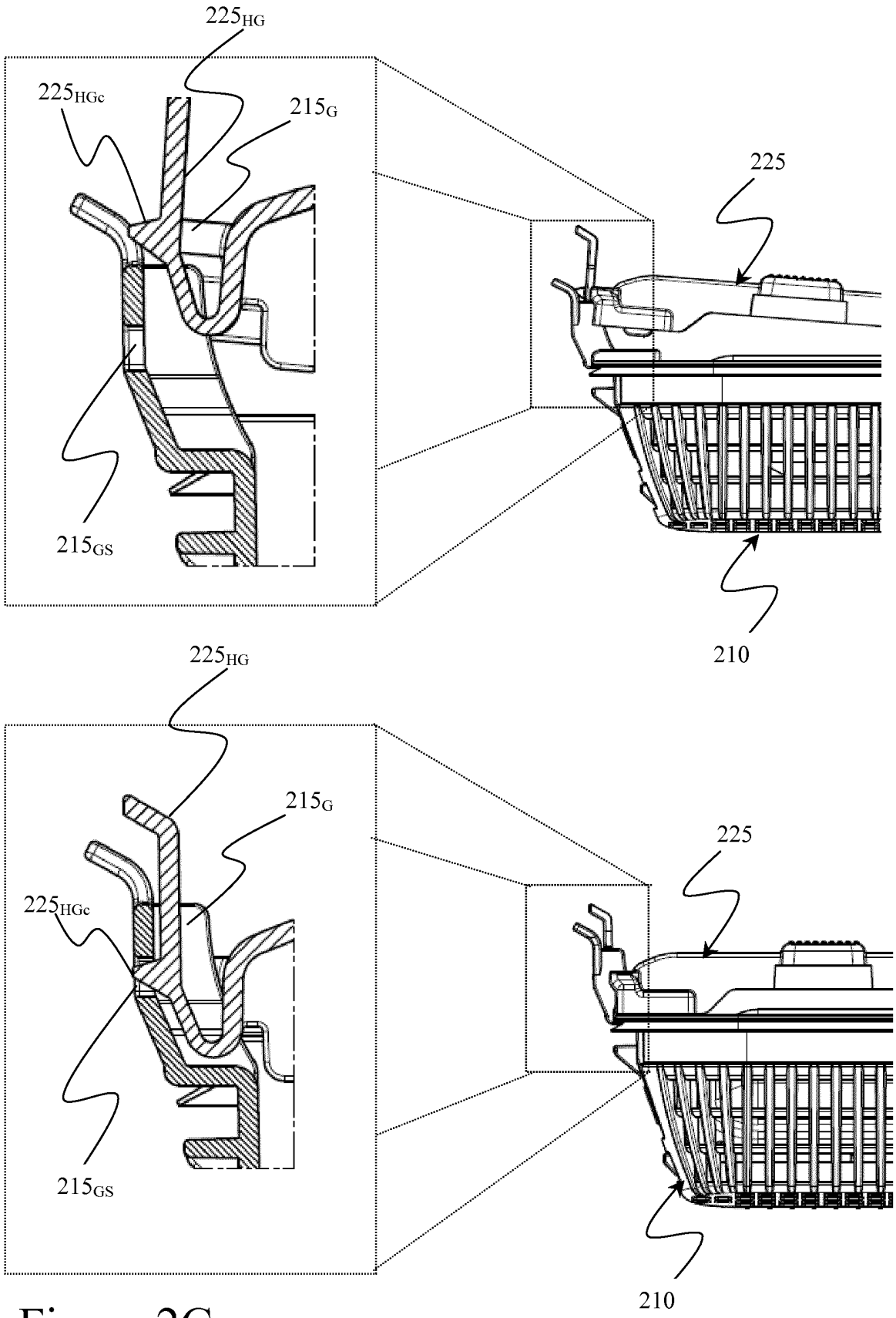
225HG
225HGc
215G
225
215GS
210
225HG
215G
225
225HGc
215GS
210

Figure 2G

REFERENCES CITED IN THE DESCRIPTION

This list of references cited by the applicant is for the reader's convenience only. It does not form part of the European patent document. Even though great care has been taken in compiling the references, errors or omissions cannot be excluded and the EPO disclaims all liability in this regard.

Patent documents cited in the description

- EP 1204792 A **[0002] [0006]**
- EP 2503050 A **[0004] [0006] [0008]**
- EP 2746448 A **[0005]**