(19) Europäisches Patentamt
European Patent Office
Office européen des brevets

(11) **EP 3 095 918 A1**

(12) **EUROPEAN PATENT APPLICATION**

(43) Date of publication:
23.11.2016 Bulletin 2016/47

(51) Int Cl.:
E01F 15/04 *(2006.01)*

(21) Application number: **16001113.6**

(22) Date of filing: **17.05.2016**

(84) Designated Contracting States:
AL AT BE BG CH CY CZ DE DK EE ES FI FR GB GR HR HU IE IS IT LI LT LU LV MC MK MT NL NO PL PT RO RS SE SI SK SM TR
Designated Extension States:
BA ME
Designated Validation States:
MA MD

(30) Priority: **21.05.2015 PL 41241815**

(71) Applicant: **Stalprodukt S.A.**
32-700 Bochnia (PL)

(72) Inventors:
- **Palkowski, Dawid**
  32-700 Bochnia (PL)
- **Piechnik, Marcin**
  32-742 Sobolów (PL)

(74) Representative: **Lukaszyk, Szymon**
Kancelaria Patentowa Lukaszyk
ul. Glowackiego 8/6
40-052 Katowice (PL)

(54) **AN ABSORBING ELEMENT OF A SAFETY TRAFFIC BARRIER AND A SAFETY TRAFFIC BARRIER COMPRISING SUCH AN ABSORBING ELEMENT**

(57) The present invention relates to an absorbing element (3) of a safety traffic barrier (1) having a form of a metal, bended thin-walled shape having a first mounting wall (31) provided with connecting means (311, 312) apt to be mounted to a guardrail (4) of a barrier (1), a second mounting wall (34a, 34b) being substantially parallel with respect to the first mounting wall (31) and having connecting means (341) apt to be mounted to a post (2) of a barrier (1), and two deformation walls (32, 33) connecting the first mounting wall (31) with the second mounting wall (34a, 34b). In order to enable for constructing safety traffic barriers of an improved shock-absorption capability each of the deformation walls (32, 33) is inclined at an acute inclination angle in the vertical plane, wherein the orientation of said acute inclination angle (α) is the same for the both deformation walls (32, 33), and furthermore the preferable inclination angle (α) of at least one of the deformation walls (32, 33) is within the range from 4 to 20°, preferably within the range from 5 to 10°, more preferably within the range from 6 to 8°, and particularly preferably amounts about 7°. The absorbing elements (3) of the present invention feature a simple and economical construction and ensure a simple and fast installation of safety traffic barriers (1). The present invention relates also to a safety traffic barrier (1) comprising such absorbing elements (3).

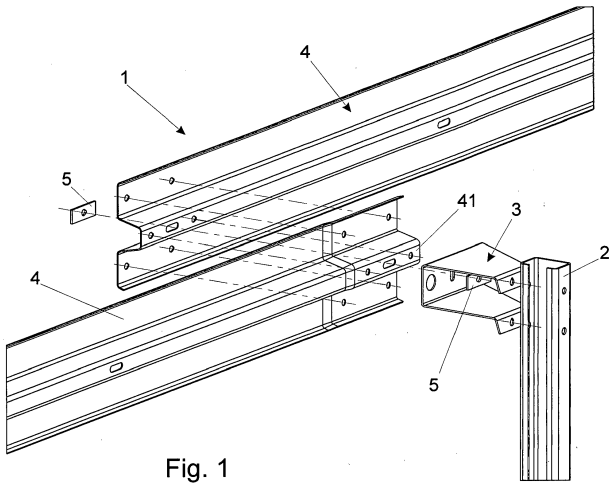

Fig. 1

EP 3 095 918 A1

Description

[0001] The present invention relates to an absorbing element of a safety traffic barrier having a form of a metal bended thin-walled shape having a first mounting wall provided with connecting means apt to be mounted to a guardrail of a barrier, a second mounting wall being substantially parallel with respect to the first mounting wall and having connecting means apt to be mounted to a post of a barrier, and two deformation walls connecting the first mounting wall with the second mounting wall. The present invention also relates to a safety traffic barrier comprising a number of substantially vertical posts fixed in a substructure, a number of substantially horizontal shaped guardrails, and a number of such absorbing elements connecting the posts with the guardrails.

[0002] A safety traffic barrier is a safety device for traffic that is commonly disposed in dangerous locations for an absorption of an energy of a possible collision of a vehicle driving a road. Such a barrier constitutes also a physical obstacle that in a case of striking it by a vehicle may make a threat for health or life of traffic participants. The fundamental object of a safety traffic barrier is thus to provide a protection of health and life of traffic participants and providing safety for persons and buildings located in road surroundings.

[0003] Exemplary safety traffic barriers comprising various absorbing elements are disclosed inter alia in the following patent publications: DE4425182A1, EP1876301A1 or DE3640821C1.

[0004] The object of the present invention has been to provide an absorbing element of a safety traffic barrier that would enable for constructing safety traffic barriers of an improved shock-absorption capability, and additionally would feature a simple and economical construction and ensure a fast installation of safety traffic barriers.

[0005] In order to accomplish the aforementioned and other objects, according to the present invention it is provided an absorbing element of a safety traffic barrier as defined in the outset which is characterized in that each of the deformation walls is inclined at an acute inclination angle in the vertical plane, wherein the orientation of said acute inclination angle is the same for the both deformation walls.

[0006] The deformation walls are preferably inclined upward in the direction toward the first mounting wall, and said inclination angle is substantially the same for the both deformation walls.

[0007] In some preferred embodiments of the present invention, said inclination angle of at least one of the deformation walls is within the range from 4 to 20°, preferably within the range from 5 to 10°, more preferably within the range from 6 to 8°, and particularly preferably amounts about 7°.

[0008] Preferably at least one of the deformation walls has a substantially trapezoid shape, wherein the base angle of the trapezoid shape in the horizontal plane is within the range from 50 to 85°, preferably within the range from 60 to 80°, more preferably within the range from 69 to 73°, and particularly preferably amounts about 71°.

[0009] The proportion of the width of the first mounting wall along the edge of a transformation into the deformation wall to the length of the deformation walls in the horizontal plane is preferably within the range from 1.4 to 1.6, and the proportion of the height of the first mounting wall to the length of the deformation walls in the horizontal plane is preferably within the range from 0.5 to 0.7.

[0010] The radius of a curvature of the transition areas between the walls preferably corresponds to the thickness of the absorbing element. Thanks to that, in a case of forming the absorbing element from zinc-plated sheet metal, a probability of peeling off of zinc in bending areas is decreased.

[0011] According to the present invention it is also provided a safety traffic barrier which is characterized in that it comprises the above-defined absorbing elements.

[0012] The safety traffic barrier of the present invention preferably comprises at least one absorbing element, and preferably a number of absorbing elements having substantially trapezoid deformation walls, the longer edges of which are located at the guardrails.

[0013] Safety traffic barriers according to the present invention comprising absorbing elements according to the present invention feature a very good energy absorption level and yet providing a decrease of a working width (according to the standard PN-EN 1317).

[0014] The exemplary embodiment of the present invention is presented below in connection with the attached drawings on which

Fig. 1 presents an exploded view of an embodiment of a safety traffic barrier of the present invention depicting a connection of shape guardrails, an absorbing element and a post;
Fig. 2 presents the absorbing element in an axonometric view from the front side (Fig. 2a) and from the back side (Fig. 2b) respectively,
Fig. 3 presents the absorbing element respectively in a top view (Fig. 3a), in a back view (Fig. 3b), in a side view (Fig. 3c) and in a front view (Fig. 3d),
Fig. 4 presents the absorbing element in an unfolded state before press forming thereof in a top view, and
Fig. 5 presents the safety traffic barrier together with the absorbing element in a side view.

[0015] A safety traffic barrier 1, the fragment of which is schematically depicted in Figs. 1 and 5, comprises a number of substantially vertical posts 2 fixed in a substructure and projecting above the substructure at a height of about 60 cm. Absorbing elements 3 are mounted to the posts 2, wherein substantially horizontal shaped guardrails 4 are in turn mounted to the absorbing elements 3 such that the end sections of the adjoining guardrails 4 are inserted into each other. Particular elements of the barrier 1 are fastened by means of appropriate screws with nuts (that are not shown in Fig. 1) and additional washers 5.

[0016] As shown in Figs. 2 and 3, the absorbing element 3 has a form of a metal shape having a first mounting wall 31, from which are projected the upper deformation wall 32 and the lower deformation wall 33 substantially parallel to each other, from which in turn two coplanar walls 34a and 34b project, thus defining a second mounting wall. Alternatively the mounting walls 34a and 34b may be obviously projected facing against each other. Furthermore these mounting walls 34a and 34b may concreate a single second mounting wall, wherein the first mounting wall may be comprised of two separate mounting walls.

[0017] A longitudinal mounting opening 311 and two compensation openings 312 are formed in the first mounting wall 31, wherein in these openings may be situated heads of screws or nuts connecting the guardrails 4 with each other after an assembly of the barrier 1. Thanks to that the first mounting wall 31 completely adheres to the longitudinal mounting wall 41 of the guardrail 4 providing an increased surface of the contact with the guardrails in a moment of a collision impact. Similarly, the walls 34a and 34b of the second mounting wall have mounting openings 341 enabling for mounting the absorbing element 3 to the post 2 of the barrier 1. The longitudinal shape of certain chosen mounting openings compensates for thermal expansion of guardrails 4 and increases a tolerance of mounting of the barrier 1 elements.

[0018] The deformation walls 32 and 33 have substantially trapezoid shape, wherein the base angle β of the legs of the trapezoid shape in the horizontal plane amounts about 71°. Wherein the longer bases of the trapezoid deformation walls 32 and 33 adjoin with the first mounting wall 31 and are located at the guardrail 4.

[0019] As illustrated in Fig. 3c, the deformation walls 32 and 33 are inclined upward in the direction toward the first mounting wall 31 at an acute inclination angle α of about 7°. It is also visible that in the presented embodiment the absorbing element 3 features a symmetry with respect to the vertical plane crossing the center of the first mounting wall 31.

[0020] In the presented embodiment, the absorbing element 3 has the following dimensions:

- the width S_1 of the first mounting wall 31: 290 $\pm$ 2 mm;
- the height H of the first mounting wall 31: 119 $\pm$ 2 mm;
- the width S_2 of the first mounting wall 34a and 34b 115 $\pm$ 5 mm;
- the length D of the first mounting wall 32 i 33 in the horizontal plane: 198.5 $\pm$ 5 mm;
- the radius R of the bend of the walls 31, 32, 33 i 34 5 $\pm$ 1 mm;
- the thickness G of the walls 31, 32, 33 i 34 4 mm.

[0021] The proportion of the width S_1 of the first mounting wall 31 along the edge of a transition into the deformation wall 32, 33 to the length D of the deformation walls 32, 33 in the horizontal plane is within the range from 1.4 to 1.6, whereas the proportion of the height H of the first mounting wall 31 to the length D of the deformation walls 32, 33 in the horizontal plane is within the range from 0.5 to 0.7.

[0022] In the presented embodiment, the absorbing elements 3 according to the present invention are made of low-alloy steel S355J2 of an increased durability according to the standard EN 10025 and are fire-zinc-plated by a submersion method according to the standard EN ISO 1461.

[0023] As illustrated in Fig. 4, before subjected a press forming operation, the absorbing element 3 has an exceptionally simple shape that additionally ensures a minimization of a surface of post-production cutaway residues from a process of cutting out the absorbing elements 3 from a steel sheet.

[0024] For the safety traffic barrier according to the present invention as presented in Fig. 1, simulation tests and a practical crash test have been carried out.

[0025] The simulation tests have been carried out using a finite element method (FEM) by means of numerical tools indicated in the Table 1 and the numerical models indicated in the Tables 2 and 3. The practical crash test has been performed in the accredited laboratory facility Aisico (http://www.aisico.it). The test results are listed in the Table 4.

Table 1 – numerical tools

Hardware	Supercomputer HPC CRAY XC-30 provided with 24 calculation nodes each of which comprising 16 calculation cores Intel E5 2670 and 768 GB Ram	
Software	Pre-processing	Altair HyperMesh version 11.0
		LS-PREPOST 4.0
	Solver	LS-DYNA mpp s R7.1.1 hybrid; Revision:88541; Precision: Single precision (I4R4)
		PBS PRO (a queuing system)
	Post processing	Altair HyperView version 11.0
		LS-PREPOST 4.0

Table 2 - The FEM model of the bus vehicle

Name:	Unit	Value
A number of elements		53689
A number of nodes		54458
The vehicle mass	[kg]	12869
Dimensions on the axes		
X	[mm]	12688
Y	[mm]	2569
Z	[mm]	3175
The wheel base X	[mm]	6506
The wheel base Y	[mm]	1856
The vehicle velocity	[km/h]	70.0
The accelerometer	[node index]	700002

Table 3 - The FEM model of a safety traffic barrier system (a safety traffic barrier, driven, single)

Name	Unit	Value
A number of elements		80184
A number of nodes		86590
The length of an installation	[m]	60
Ending		Boundary condition

Table 4 - Test results

Test No.		**11/2015**	**12/2015**	**10/2015**	**1222-TB51**
Test type		numerical simulation test			practical crash test
The inclination angle of deformation walls	[°]	0	20	7	7
The mass of a system	[kg/m]	28.4			
SIMULATION CONDITIONS					
The mass of a vehicle	[kg] [km/h]	12869			12702
The velocity of a vehicle		70			70.5
The angle of an impact	[°]	20			
SIMULATION RESULTS					
Maximal dynamic deformation	[m]	-	1.2	1.2	1.1
Maximal stable deformation	[m]	-	1.0	1.1	1.0
Normalized working width level		-	W5	W4	W4
BEHAVIOUR OF A SYSTEM					
A system restrained and gave direction to a vehicle		NO	YES		
An important part has been detached from a system or has been damaged		YES	NO		
A fixation in the ground fulfills constructional requirements		YES			
BEHAVIOUR OF A VEHICLE					
A vehicle has breached a barrier		YES	NO		
A vehicle has passed over a barrier		NO			
A vehicle has overpassed the exit box line		NO			
A vehicle leans over laterally in a test area		NO			
A sizable vehicle part has been torn away		NO			

[0026] The test results obtained indicate that an employment of the absorbing element according to the present invention in road and bridge safety traffic barrier systems makes the barrier systems unexpectedly featuring exceptionally preferable collision shock-absorption parameters.

[0027] As it turned out, the inclination angle α of the deformation walls of an absorbing element had a critical effect on the obtained results. The conducted simulation tests have confirmed that the inclination angle α of the deformation walls of an absorbing element amounting about 7° (the test 10/2015) ensured the best results in respect of a working width level that in accordance with the standard EN 1317 corresponded to the level W4 (1.2 m). For the inclination angle α amounting 0° (the test 11/2015) the barrier was not capable of holding down the vehicle. While an increase of the inclination angle α to a value of about 20° (the test 12/2015) has indeed enabled for holding down the vehicle, nonetheless it resulted in a significant deterioration of the working width that has reached the level W5 according to the standard EN 1317.

[0028] The results of the simulation test (the test 10/2015) for the inclination angle α of the deformation walls of an absorbing element amounting 7° have been verified and confirmed in a practical crash test (the test 1222-TB51).

[0029] The presented embodiment is not to be considered as limiting the intended scope of invention protection that is defined in the appended patent Claims.

[0030] The above described embodiment of the present invention is merely exemplary. The figures are not necessarily to scale, and some features may be exaggerated or minimized. These and other factors however should not be considered as limiting the spirit of the invention, the intended scope of protection of which is indicated in the appended patent Claims.

Claims

1. An absorbing element (3) of a safety traffic barrier (1) having a form of a metal, bended thin-walled shape having

a first mounting wall (31) provided with connecting means (311, 312) apt to be mounted to a guardrail (4) of a barrier (1),
a second mounting wall (34a, 34b) being substantially parallel with respect to the first mounting wall (31) and having connecting means (341) apt to be mounted to a post (2) of a barrier (1), and

two deformation walls (32, 33) connecting the first mounting wall (31) with the second mounting wall (34a, 34b),
characterized in that
each of the deformation walls (32, 33) is inclined at an acute inclination angle in the vertical plane, wherein the orientation of said acute inclination angle (α) is the same for the both deformation walls (32, 33).

2. The absorbing element according to Claim 1, **characterized in that** the deformation walls (32, 33) are inclined upward in the direction toward the first mounting wall (31).

3. The absorbing element according to Claim 1 or 2, **characterized in that** said inclination angle (α) is substantially equal for the both deformation walls (32, 33).

4. The absorbing element according to Claim 1 or 2 or 3, **characterized in that** said inclination angle (α) of at least one of the deformation walls (32, 33) is within the range from 4 to 20°, preferably within the range from 5 to 10°, more preferably within the range from 6 to 8°, and particularly preferably amounts about 7°.

5. The absorbing element according to any one of Claims 1-4, **characterized in that** at least one of the deformation walls (32, 33) has a substantially trapezoid shape, wherein the base angle (β) of the trapezoid shape in the horizontal plane is within the range from 50 to 85°, preferably within the range from 60 to 80°, more preferably within the range from 69 to 73°, and particularly preferably amounts about 71°.

6. The absorbing element according to any one of the preceding Claims,
characterized in that the proportion of the width (S_1) of the first mounting wall (31) along the edge of a transformation into the deformation wall (32, 33) to the length (D) of the deformation walls (32, 33) in the horizontal plane is within the range from 1.4 to 1.6.

7. The absorbing element according to any one of the preceding Claims,
characterized in that the proportion of the height (H) of the first mounting wall (31) to the length (D) of the deformation walls (32, 33) in the horizontal plane is within the range from 0.5 to 0.7.

8. The absorbing element according to any one of the preceding Claims,
characterized in that the radius (R) of a curvature of the transition areas between the walls (31, 32, 33 and 34) corresponds to the thickness (G) of the absorbing element (3).

9. A safety traffic barrier (1) comprising

a number of substantially vertical posts (2) fixed in a substructure,
a number of substantially horizontal shaped guardrails (4), and
a number of absorbing elements (3) connecting the posts (2) with the guardrails (4),

characterized in that it comprises the absorbing element (3) according to any one of Claims 1-8.

10. The safety traffic barrier according to Claim 9, **characterized in that** it comprises the absorbing elements (3) according to Claim 5 having the longer edges of the trapezoid deformation walls (32, 33) located at the guardrails (4).

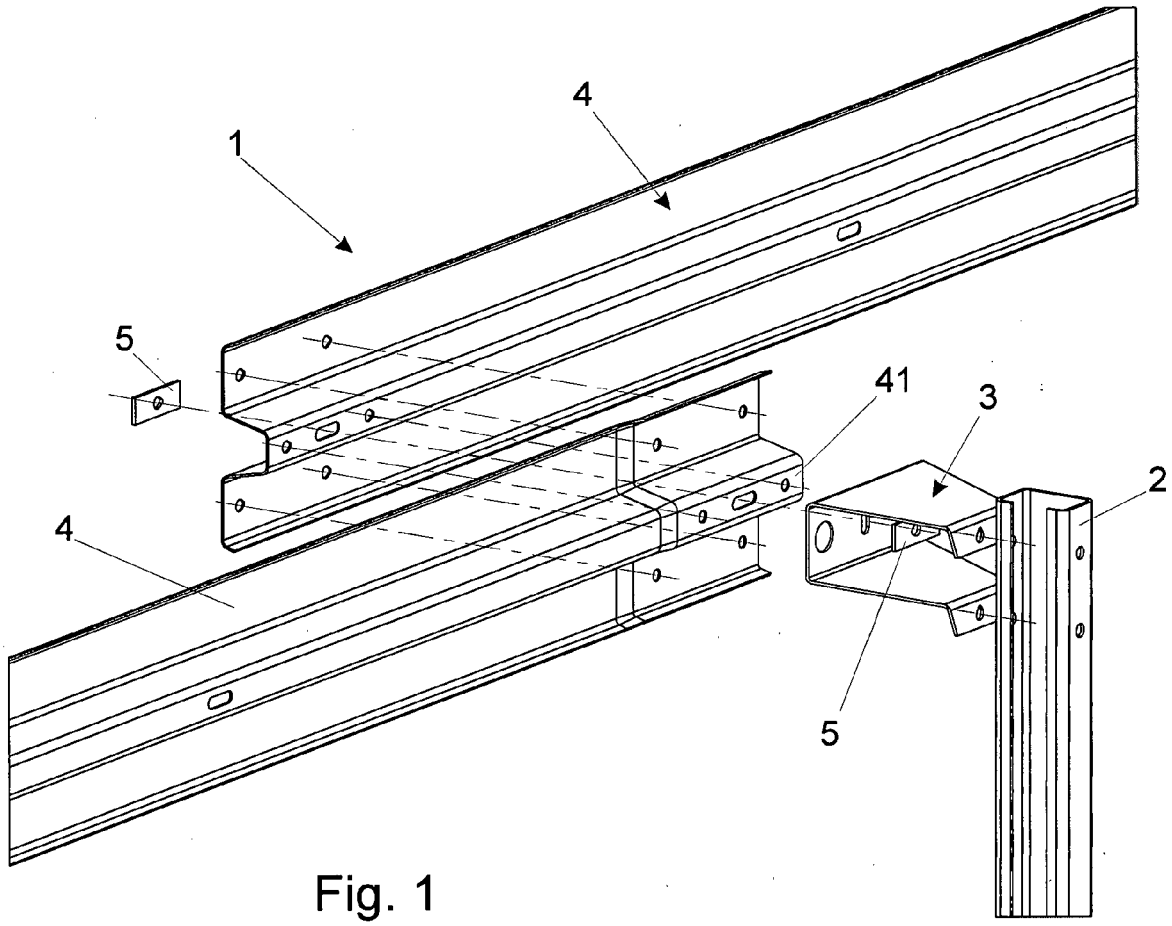

Fig. 1

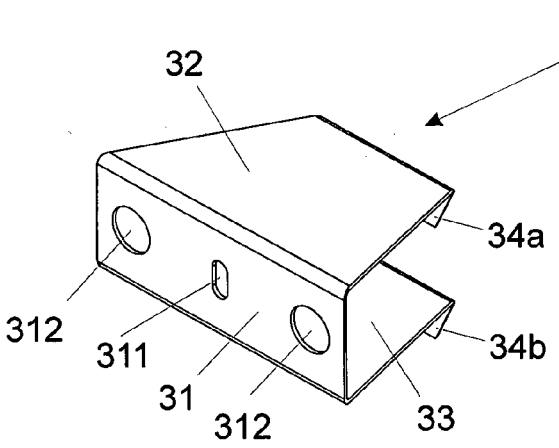

Fig. 2a

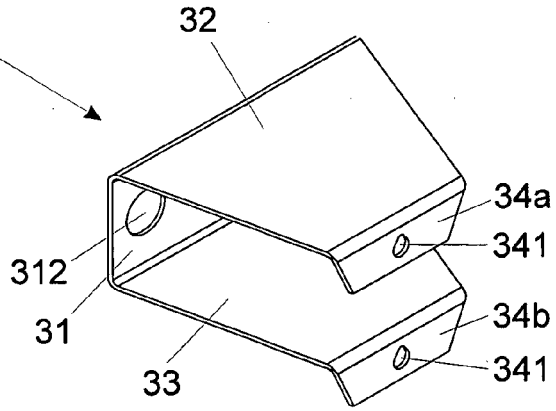

Fig. 2b

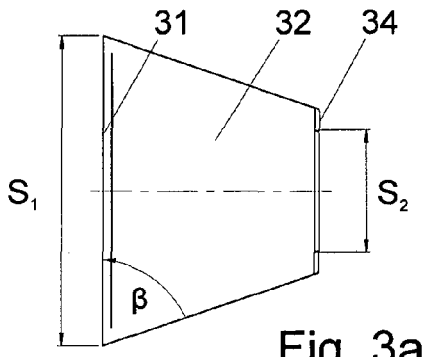

Fig. 3a

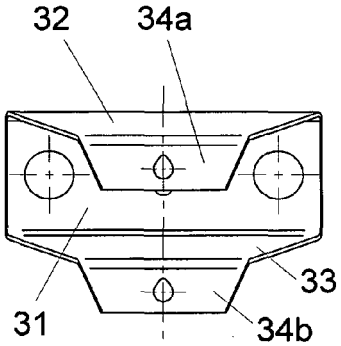

Fig. 3b

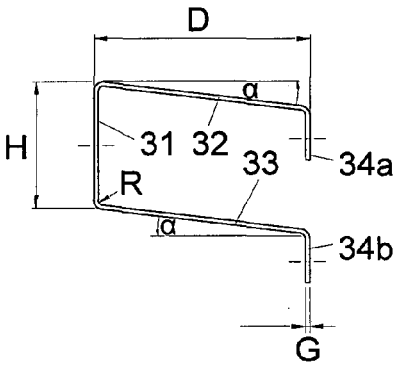

Fig. 3c

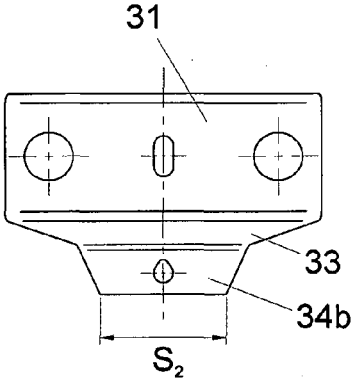

Fig. 3d

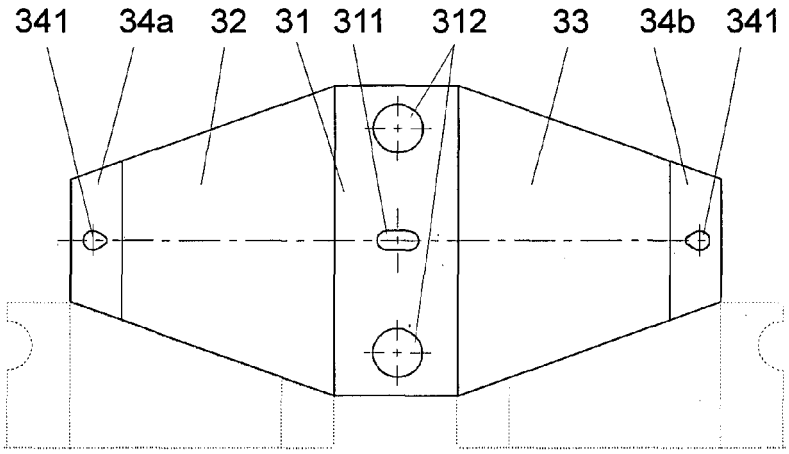

Fig. 4

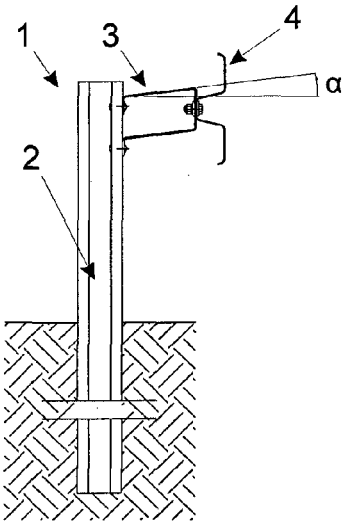

Fig. 5

Europäisches Patentamt
European Patent Office
Office européen des brevets

EUROPEAN SEARCH REPORT

Application Number
EP 16 00 1113

DOCUMENTS CONSIDERED TO BE RELEVANT

Category	Citation of document with indication, where appropriate, of relevant passages	Relevant to claim	CLASSIFICATION OF THE APPLICATION (IPC)
X	EP 2 584 096 A1 (FRACASSO S P A [IT]) 24 April 2013 (2013-04-24) * the whole document *	1-4,9	INV. E01F15/04
X	AT 11 255 U1 (ASA PROTECT ENTWICKLUNGS GMBH [AT]) 15 July 2010 (2010-07-15) * the whole document *	1-4,9	
X	AT 320 711 B (BAUMANN ERNST) 25 February 1975 (1975-02-25) * page 2, lines 40-51; figures 8,9 *	1-3,9	
A	US 5 069 576 A (POMERO CLAUDE [FR]) 3 December 1991 (1991-12-03) * column 4, lines 34-38; figures 1,2 *	1-10	

TECHNICAL FIELDS SEARCHED (IPC)
E01F

The present search report has been drawn up for all claims

Place of search	Date of completion of the search	Examiner
Munich	6 October 2016	Flores Hokkanen, P

CATEGORY OF CITED DOCUMENTS

X : particularly relevant if taken alone
Y : particularly relevant if combined with another document of the same category
A : technological background
O : non-written disclosure
P : intermediate document

T : theory or principle underlying the invention
E : earlier patent document, but published on, or after the filing date
D : document cited in the application
L : document cited for other reasons

& : member of the same patent family, corresponding document

EPO FORM 1503 03.82 (P04C01)

ANNEX TO THE EUROPEAN SEARCH REPORT ON EUROPEAN PATENT APPLICATION NO. EP 16 00 1113

This annex lists the patent family members relating to the patent documents cited in the above-mentioned European search report. The members are as contained in the European Patent Office EDP file on
The European Patent Office is in no way liable for these particulars which are merely given for the purpose of information.

06-10-2016

Patent document cited in search report	Publication date	Patent family member(s)	Publication date
EP 2584096 A1	24-04-2013	DE 202012010034 U1	04-03-2013
		EP 2584096 A1	24-04-2013
AT 11255 U1	15-07-2010	AT 11255 U1	15-07-2010
		EP 2218826 A2	18-08-2010
AT 320711 B	25-02-1975	NONE	
US 5069576 A	03-12-1991	EP 0379424 A2	25-07-1990
		FR 2641804 A1	20-07-1990
		PT 92870 A	31-07-1990
		US 5069576 A	03-12-1991

EPO FORM P0459

For more details about this annex : see Official Journal of the European Patent Office, No. 12/82

REFERENCES CITED IN THE DESCRIPTION

This list of references cited by the applicant is for the reader's convenience only. It does not form part of the European patent document. Even though great care has been taken in compiling the references, errors or omissions cannot be excluded and the EPO disclaims all liability in this regard.

Patent documents cited in the description

- DE 4425182 A1 **[0003]**
- EP 1876301 A1 **[0003]**
- DE 3640821 C1 **[0003]**