(19) Europäisches Patentamt
European Patent Office
Office européen des brevets

(11) **EP 3 208 748 A2**

(12) **EUROPEAN PATENT APPLICATION**

(43) Date of publication:
23.08.2017 Bulletin 2017/34

(51) Int Cl.:
G06K 19/07 *(2006.01)*

(21) Application number: **16163854.9**

(22) Date of filing: **05.04.2016**

(84) Designated Contracting States:
AL AT BE BG CH CY CZ DE DK EE ES FI FR GB GR HR HU IE IS IT LI LT LU LV MC MK MT NL NO PL PT RO RS SE SI SK SM TR
Designated Extension States:
BA ME
Designated Validation States:
MA MD

(30) Priority: **19.02.2016 IN 201611005879**

(71) Applicant: **NXP B.V.**
5656 AG Eindhoven (NL)

(72) Inventors:
- **RACHUPALLI, Guru**
  5656 AG Eindhoven (NL)
- **EVANI, Venkata Satya Sai**
  5656 AG Eindhoven (NL)
- **DALWADI, Jaydeep**
  5656 AG Eindhoven (NL)

(74) Representative: **Krott, Michel**
NXP Semiconductors
Intellectual Property & Licensing
High Tech Campus 60
5656 AG Eindhoven (NL)

(54) POWER SWITCHING CIRCUIT

(57) According to a first aspect of the present disclosure, a power switching circuit is provided, comprising: a bandgap reference circuit configured to receive an input voltage and to generate a reference voltage in response to receiving said input voltage; a supply selection circuit configured to receive at least two supply voltages, to select the highest voltage of said supply voltages and to provide said highest voltage to the bandgap reference circuit. According to a second aspect of the present disclosure, a corresponding method of operating a power switching circuit is conceived.

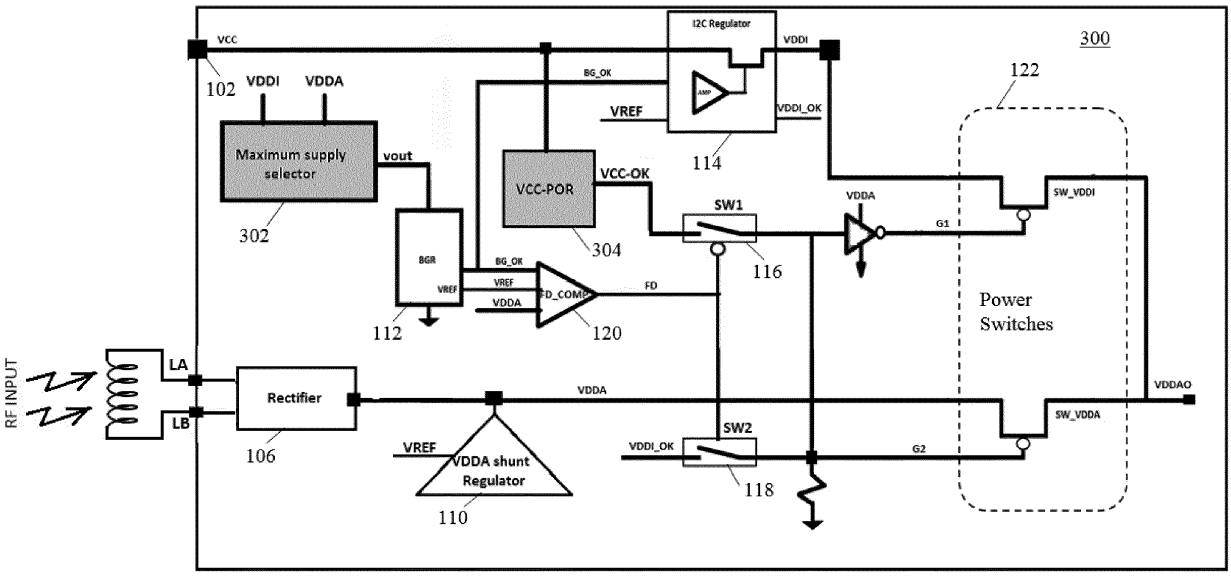

FIG. 3

EP 3 208 748 A2

Description

FIELD

[0001] The present disclosure relates to a power switching circuit. Furthermore, the present disclosure relates to a corresponding method of operating a power switching circuit.

BACKGROUND

[0002] Certain devices, such as NFC or RFID tags, may have two or more interfaces. In particular, in addition to an NFC of RFID interface (i.e., a contactless interface) these devices may have a contact interface. An example of such a device is a dual-interface NFC tag compliant with the NFC Forum standards.

SUMMARY

[0003] According to a first aspect of the present disclosure, a power switching circuit is provided, comprising: a bandgap reference circuit (BGR) configured to receive an input voltage and to generate a reference voltage in response to receiving said input voltage; a supply selection circuit configured to receive at least two supply voltages, to select the highest voltage of said supply voltages and to provide said highest voltage to the bandgap reference circuit.

[0004] In one or more embodiments, a first supply voltage is derived from an RF input of said power switching circuit.

[0005] In one or more embodiments, a second supply voltage is derived from a contact-interface input of said power switching circuit.

[0006] In one or more embodiments, the power switching circuit further comprises a voltage blocking circuit configured to block the second supply voltage if said second supply voltage is below a threshold.

[0007] In one or more embodiments, the power switching circuit further comprises a plurality of power switches for facilitating switching between the supply voltages, and the voltage blocking circuit is configured to prevent said power switches from receiving the second supply voltage if said second supply voltage is below the threshold.

[0008] In one or more embodiments, the voltage blocking circuit is a power-on reset circuit (POR).

[0009] In one or more embodiments, the supply selection circuit comprises a first stage and a second stage, the first stage is configured to create a differential voltage from input currents induced by the supply voltages, and the second stage is configured to amplify said differential voltage and to switch the maximum of the supply voltages to an output voltage.

[0010] In one or more embodiments, a NFC/RFID tag circuit comprises the power switching circuit of the kind set forth, a contactless interface and a contact interface, and the contactless interface and the contact interface are configured to provide the supply voltages to the power switching circuit.

[0011] In one or more embodiments, the NFC/RFID tag circuit further comprises an output interface, and the power switching circuit is configured to provide an output voltage to an external device through said output interface.

[0012] In one or more embodiments, the output interface is an I^2C interface.

[0013] According to a second aspect of the present disclosure, a method of operating a power switching circuit is conceived, comprising: a bandgap reference circuit of said power switching circuit receives an input voltage and generates a reference voltage in response to receiving said input voltage; a supply selection circuit of said power switching circuit receives at least two supply voltages, selects the highest voltage of said supply voltages and provides said highest voltage to the bandgap reference circuit.

[0014] In one or more embodiments, a first supply voltage is derived from an RF input of said power switching circuit.

[0015] In one or more embodiments, a second supply voltage is derived from a contact-interface input of said power switching circuit.

[0016] In one or more embodiments, a voltage blocking circuit of said power switching circuit blocks the second supply voltage if said second supply voltage is below a threshold.

[0017] In one or more embodiments, the voltage blocking circuit prevents power switches of said power switching circuit from receiving the second supply voltage if said second supply voltage is below the threshold.

DESCRIPTION OF DRAWINGS

[0018] Embodiments will be described in more detail with reference to the appended drawings, in which:

Fig. 1 shows an example of a power switching circuit;
Fig. 2 shows example waveforms for the power switching circuit of Fig. 1;
Fig. 3 shows an illustrative embodiment of a power switching circuit;
Fig. 4 shows example waveforms for the power switching circuit of Fig. 3;
Fig. 5 shows an illustrative embodiment of a supply selection circuit;
Fig. 6 shows an illustrative embodiment of a voltage blocking circuit.

DESCRIPTION OF EMBODIMENTS

[0019] **Fig. 1** shows an example of a power switching circuit 100. The power switching circuit 100 comprises a power switching circuit 100, a VCC pin 102, a VOUT pin 104, a rectifier 106, a coil voltage limiter 108, a VDDA shunt regulator 110, a bandgap reference circuit 112, an

I^2C regulator 114, an FD comparator 120, power switches 122, and control gates 116, 118 of the power switches 122. A power switching circuit 100 of this kind is often used in dual-interface NFC or RFID tag circuit. In particular, dual-interface NFC or RFID tags may be supplied with power through both interfaces, and a power switching circuit may be configured to switch between the different power sources.

[0020] Tag circuits with a dual power supply, i.e. a contactless (RF) power supply and contact-based power supply (VCC) may contain a complex power switching mechanism for choosing one of these supplies for the system. Tag circuits of this kind may provide the energy received from the contactless or contact-based power supply to an external device (e.g., a microcontroller) through an output interface (e.g., an I^2C interface). Examples of such tag circuits are the "NTAG I^2C" and "NTAG I^2C Plus" devices manufactured by NXP Semiconductors. NTAG devices may operate in a so-called energy-harvesting mode in which the VCC pin can be powered from the RF field, as shown in Fig. 1.

[0021] In operation, the VOUT pin 104 sources constant current from a regulated supply voltage derived from the RF input. In the energy-harvesting mode, the VCC pin 102 is shorted to the VOUT pin 104. Both the I^2C regulator 114 and the VDDA shunt regulator 110 have threshold-voltage (VTH) based, crude pre-regulators which can bring their output voltages to a value where the bandgap reference circuit 112 can be operational, once the respective input supply is turned ON. Once reference voltage builds up, the main loop in the regulators brings the output voltage (VDDAO) of the power switching circuit to a final regulated voltage. Note that VDDA is the regulated supply voltage derived from the RF input and VDDI is the regulated supply voltage derived from the contact-based power supply.

[0022] Furthermore, the signal FD (field detect) will be high if BG_OK is high and VDDA rises above a certain threshold voltage level. FD high indicates that the RF field is ON and that VDDA is ready to supply the load. Signal VDDI_OK will be high if BG_OK is high and VDDI rises above a certain threshold voltage level. VDDI_OK high indicates that VCC is ON and that VDDI is ready to supply the load. If FD is low (i.e., in the absence of an RF field), the gate SW1 116 will be turned ON and the gate SW2 118 will be turned OFF. VDDI passes through gate SW1 116 pulling net G1 to low. As a result, switch SW_VDDI will be turned ON making VDDAO=VDDI. If FD is high gate SW1 116 will be turned OFF and gate SW2 118 will be turned ON. As a result, VDDI_OK passes to net G2. Depending on the state of VDDI_OK, the signal VDDAO is now defined as follows: if VDDI_OK is high, net G1 will be low making VDDAO=VDDI, otherwise if VDDI_OK is low, net G2 will be low making VDDAO=VDDA.

[0023] During short RF resets, VCC (VOUT) can discharge to any value depending on the RF reset duration and the current flowing through VCC. The circuit condition when there is no RF input and at lower VCC voltage may be as follows:

- VDDA ~ 0V
- FD ~ 0V
- VDDI ~ VCC
- G1 ~ 0V
- G2 ~ VDDI
- VDDAO ~ VDDI

[0024] At above VDDAO voltage, the bandgap reference circuit 112 might not work properly and the BG_OK signal might be low. When the system is in the above condition and RF turns ON, VDDA rises partially as defined by a pre-regulator. The voltage VDDA is blocked by VDDI (net G2) so as to not pass to VDDAO. A further increase in the voltage VDDA needs a reference voltage to come up, which indeed needs the voltage VDDAO to come up. Ultimately, the system may remain in this state indefinitely.

[0025] **Fig. 2** shows example waveforms for the power switching circuit of Fig. 1. In particular, it shows that after a short RF reset VDDAO doesn't rise and follows VDDI. Furthermore, FD and BG_OK remain in a logic low state. Furthermore, VDDA rises partially and remains there. Thus, as mentioned above, the system may remain indefinitely in a certain state.

[0026] Therefore, according to a first aspect of the present disclosure, a power switching circuit is provided, comprising: a bandgap reference circuit configured to receive an input voltage and to generate a reference voltage in response to receiving said input voltage, and a supply selection circuit configured to receive at least two supply voltages, to select the highest voltage of said supply voltages and to provide said highest voltage to the bandgap reference circuit. In this way, it may be prevented that the system is trapped in a certain state. In particular, it allows the bandgap reference circuit to start up immediately in the sense that any of the supply voltages is promptly available to it. In particular, a first supply voltage may be derived from an RF input of said power switching circuit. Furthermore, a second supply voltage may be derived from a contact-interface input of said power switching circuit. Thus, a practical and efficient implementation of a power switching circuit for use in a dual-interface tag may be realized, while avoiding that the power switching circuit is trapped in a certain state. Furthermore, in one or more embodiments, the power switching circuit includes a voltage blocking circuit configured to block the second supply voltage if said second supply voltage is below a threshold. This may also contribute to preventing that the power switching circuit is trapped in a certain state. In a practical and efficient im-

plementation, the voltage blocking circuit is a power-on reset (POR) circuit.

[0027] **Fig. 3** shows an illustrative embodiment of a power switching circuit 300. The power switching circuit 300 comprises, in addition to components shown in Fig. 1, a maximum supply selector 302 (i.e., a supply selection circuit) and a VCC-POR circuit 304 (i.e., a voltage blocking circuit implemented as a power-on reset circuit). The maximum supply selector 302 is operatively coupled to the bandgap reference circuit 112. In operation, the maximum supply selector 302 receives VDDI and VDDA, selects the maximum of VDDI and VDDA, and provides said maximum to the bandgap reference circuit 112. Thus, the bandgap reference circuit 112 is effectively powered by the maximum of the supply voltages VDDI and VDDA, thus allowing the bandgap reference circuit 112 to start up immediately in the sense that any of the supply voltages VDDI and VDDA is promptly available to it. Furthermore, the VCC-POR circuit 304 blocks the voltage VCC if VCC is below a predefined threshold. For example, 1.2V is a suitable threshold. In a practical and efficient implementation, the VCC-POR circuit 304 prevents the power switches 122 from receiving VCC if VCC is below said threshold. Thus, the VCC-POR circuit 304 effectively blocks lower VCC voltages so that they do not enter into the power switches 122, thus making net G2 low at lower VCC voltages. This allows VDDA to pass to VDDAO upon card entering into RF field.

[0028] **Fig. 4** shows example waveforms for the power switching circuit of Fig. 3. As shown, once RF turns ON after a reset VDDA starts rising by pre-regulator. The maximum supply selector switches to VDDA from VDDI once VDDA rises above the VDDI voltage. As the supply to the bandgap reference circuit rises, BG_OK is asserted HIGH (meaning that the bandgap reference circuit has started up and that the reference voltages generated by it are stable) causing VDDA to reach the state of a final regulated voltage. It is also shown that if VCC voltage is low VCC_OK will be low, causing voltage at net G2 to be low. This allows VDDA to pass to VDDAO.

[0029] **Fig. 5** shows an illustrative embodiment of a supply selection circuit 500. The supply selection circuit 500 includes a first stage 502 (i.e., an input stage or comparator) and a second stage 504. The size of the input transistors of the comparator 502 may be properly chosen, so as to limit the current induced by the voltage VDDA. Also, in order to ensure proper operation, the minimum voltage required for the comparator 502 to operate with sufficient gain may be Vov [Overdrive voltage of Input Transistors, Minp] + VTH [Threshold of Load Transistors, Mload] ~ 0.8 V. The input stage 502 is a common-gate stage which senses voltages VDDI and VDDA and converts them to a proportional current. The first stage load is a hysteresis-generating cross-coupled architecture which creates a differential voltage from input currents. This differential voltage is proportional to the voltage difference between the power supplies. The second stage 504 amplifies this differential voltage and switches the maximum of two input voltage to VOUT. A break-before-make configuration may be implemented in the second stage 504 so as to avoid a shoot-through current while switching.

[0030] **Fig. 6** shows an illustrative embodiment of a voltage blocking circuit 600. The voltage blocking circuit 600 comprises a comparator 602. Resistors R1 and R2 define the trip voltage of the voltage blocking circuit 600 for a given size of transistor MN1 and resistor R4. The type of resistor R4 may be chosen carefully to counter VT variation of transistor MN1 with temperature. Transistor MN2 and resistor R3 introduce hysteresis. In order to increase the reliability of the circuit, the output may be level shifted to VMAX.

[0031] The presently disclosed power switching circuit may be used to advantage in NFC or RFID tag circuits, in particular in dual-interface NFC or RFID tag circuits. In that case, the first supply voltage may be provided by a so-called contactless interface, for example as defined in the standard ISO/IEC 14443, and the second supply voltage may be provided by a so-called contact interface, for example as defined in the standard ISO/IEC 7816. Furthermore, the tag circuit may include an output interface, for example an I^2C interface for coupling the tag circuit to an external device (e.g., a microcontroller). In that case, the presently disclosed power switching circuit may be configured to provide an output voltage to this external device through said output interface.

[0032] It is noted that the embodiments above have been described with reference to different subject-matters. In particular, some embodiments may have been described with reference to method-type claims whereas other embodiments may have been described with reference to apparatus-type claims. However, a person skilled in the art will gather from the above that, unless otherwise indicated, in addition to any combination of features belonging to one type of subject-matter also any combination of features relating to different subject-matters, in particular a combination of features of the method-type claims and features of the apparatus-type claims, is considered to be disclosed with this document.

[0033] Furthermore, it is noted that the drawings are schematic. In different drawings, similar or identical elements are provided with the same reference signs. Furthermore, it is noted that in an effort to provide a concise description of the illustrative embodiments, implementation details which fall into the customary practice of the skilled person may not have been described. It should be appreciated that in the development of any such implementation, as in any engineering or design project, numerous implementation-specific decisions must be made in order to achieve the developers' specific goals, such as compliance with system-related and business-related constraints, which may vary from one implementation to another. Moreover, it should be appreciated that such a development effort might be complex and time consuming, but would nevertheless be a routine undertaking of design, fabrication, and manufacture for those

of ordinary skill.

[0034] Finally, it is noted that the skilled person will be able to design many alternative embodiments without departing from the scope of the appended claims. In the claims, any reference sign placed between parentheses shall not be construed as limiting the claim. The word "comprise(s)" or "comprising" does not exclude the presence of elements or steps other than those listed in a claim. The word "a" or "an" preceding an element does not exclude the presence of a plurality of such elements. Measures recited in the claims may be implemented by means of hardware comprising several distinct elements and/or by means of a suitably programmed processor. In a device claim enumerating several means, several of these means may be embodied by one and the same item of hardware. The mere fact that certain measures are recited in mutually different dependent claims does not indicate that a combination of these measures cannot be used to advantage.

LIST OF REFERENCE SIGNS

[0035]

100	power switching circuit
102	VCC pin
104	VOUT pin
106	rectifier
108	coil voltage limiter
110	VDDA shunt regulator
112	bandgap reference circuit
114	I^2C regulator
116	control gate
118	control gate
120	FD comparator
122	power switches
300	power switching circuit
302	maximum supply selector
304	VCC-POR circuit
500	maximum supply selector
502	first stage (comparator)
504	second stage
600	VCC-POR circuit
602	comparator

Claims

1. A power switching circuit, comprising:

a bandgap reference circuit configured to receive an input voltage and to generate a reference voltage in response to receiving said input voltage;

a supply selection circuit configured to receive at least two supply voltages, to select the highest voltage of said supply voltages and to provide said highest voltage to the bandgap reference circuit.

2. The power switching circuit of claim 1, wherein a first supply voltage is derived from an RF input of said power switching circuit.

3. The power switching circuit of claim 1 or 2, wherein a second supply voltage is derived from a contact-interface input of said power switching circuit.

4. The power switching circuit of claim 3, further comprising a voltage blocking circuit configured to block the second supply voltage if said second supply voltage is below a threshold.

5. The power switching circuit of claim 4, further comprising a plurality of power switches for facilitating switching between the supply voltages, wherein the voltage blocking circuit is configured to prevent said power switches from receiving the second supply voltage if said second supply voltage is below the threshold.

6. The power switching circuit of claim 4 or 5, wherein the voltage blocking circuit is a power-on reset circuit.

7. The power switching circuit of any preceding claim, wherein the supply selection circuit comprises a first stage and a second stage, wherein the first stage is configured to create a differential voltage from input currents induced by the supply voltages, and wherein the second stage is configured to amplify said differential voltage and to switch the maximum of the supply voltages to an output voltage.

8. An NFC/RFID tag circuit comprising the power switching circuit of any preceding claim, a contactless interface and a contact interface, wherein the contactless interface and the contact interface are configured to provide the supply voltages to the power switching circuit.

9. The NFC/RFID tag circuit of claim 8, further comprising an output interface, wherein the power switching circuit is configured to provide an output voltage to an external device through said output interface.

10. The NFC/RFID tag circuit of claim 9, wherein the output interface is an I^2C interface.

11. A method of operating a power switching circuit, comprising:

a bandgap reference circuit of said power switching circuit receives an input voltage and generates a reference voltage in response to receiving said input voltage;

a supply selection circuit of said power switching circuit receives at least two supply voltages, selects the highest voltage of said supply voltages and provides said highest voltage to the bandgap reference circuit.

12. The method of claim 11, wherein a first supply voltage is derived from an RF input of said power switching circuit.

13. The method of claim 12, wherein a second supply voltage is derived from a contact-interface input of said power switching circuit.

14. The method of claim 13, wherein a voltage blocking circuit of said power switching circuit blocks the second supply voltage if said second supply voltage is below a threshold.

15. The method of claim 14, wherein the voltage blocking circuit prevents power switches of said power switching circuit from receiving the second supply voltage if said second supply voltage is below the threshold.

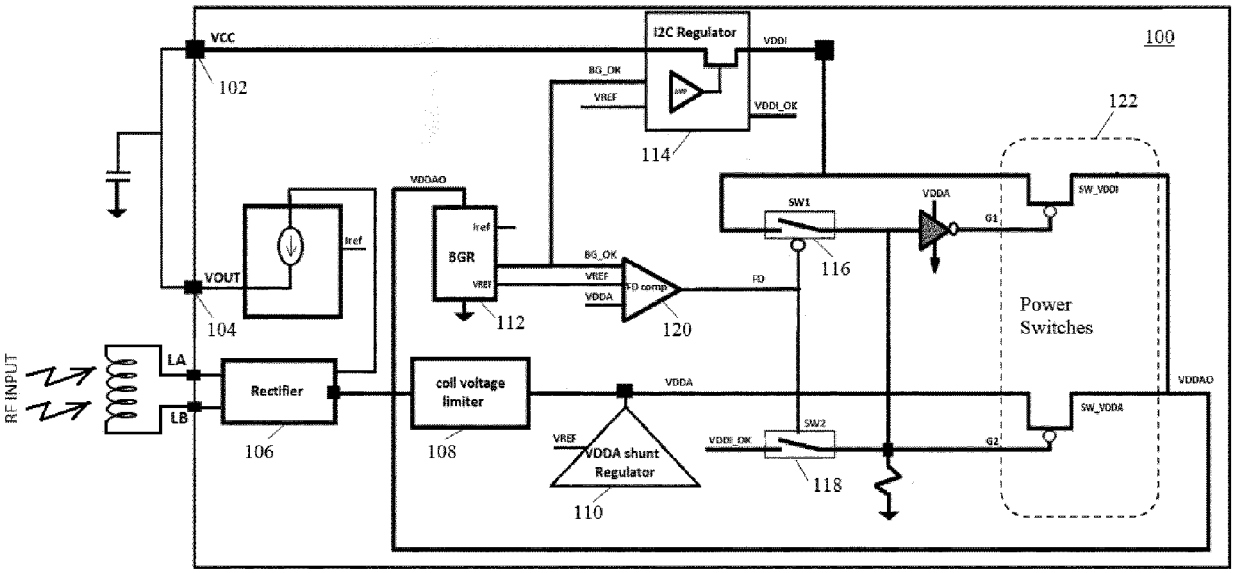
VCC
102
I2C Regulator
VDDI
100
BG_OK
VREF
VDDI_OK
114
122
VDDAO
SW1
VDDA
SW_VDDI
G1
Iref
BGR
Iref
VREF
BG_OK
VREF
VDDA
FD comp
FD
116
VOUT
104
112
120
Power
Switches
RF INPUT
LA
LB
Rectifier
106
coil voltage
limiter
108
VDDA
VDDAO
SW_VDDA
VREF
VDDA shunt
Regulator
110
VDDI_OK
SW2
G2
118

FIG. 1

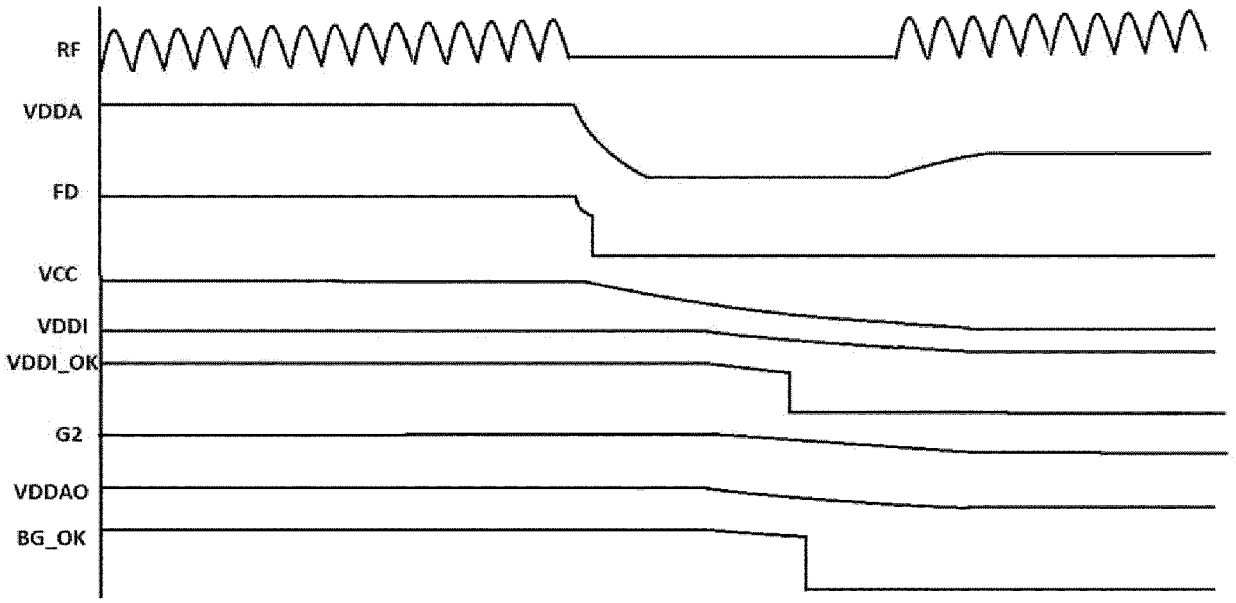

FIG. 2

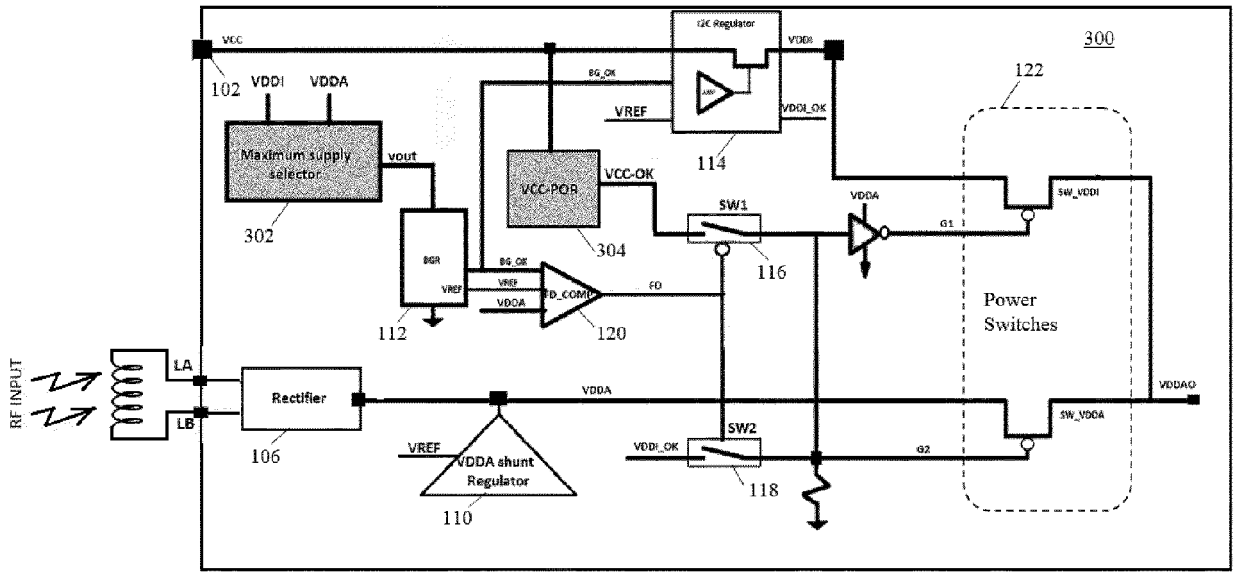
VCC
102
VDDI
VDDA
Maximum supply selector
302
vout
BGR
VREF
112
BG_OK
VREF
VDDA
FD_COMP
120
FD
I2C Regulator
VDDI
VDDI_OK
114
VREF
BG_OK
VCC-POR
304
VCC-OK
SW1
116
VDDA
G1
SW_VDDI
300
122
Power Switches
VDDAO
SW_VDDA
SW2
VDDI_OK
G2
118
VDDA shunt Regulator
110
VREF
Rectifier
106
VDDA
LA
LB
RF INPUT

FIG. 3

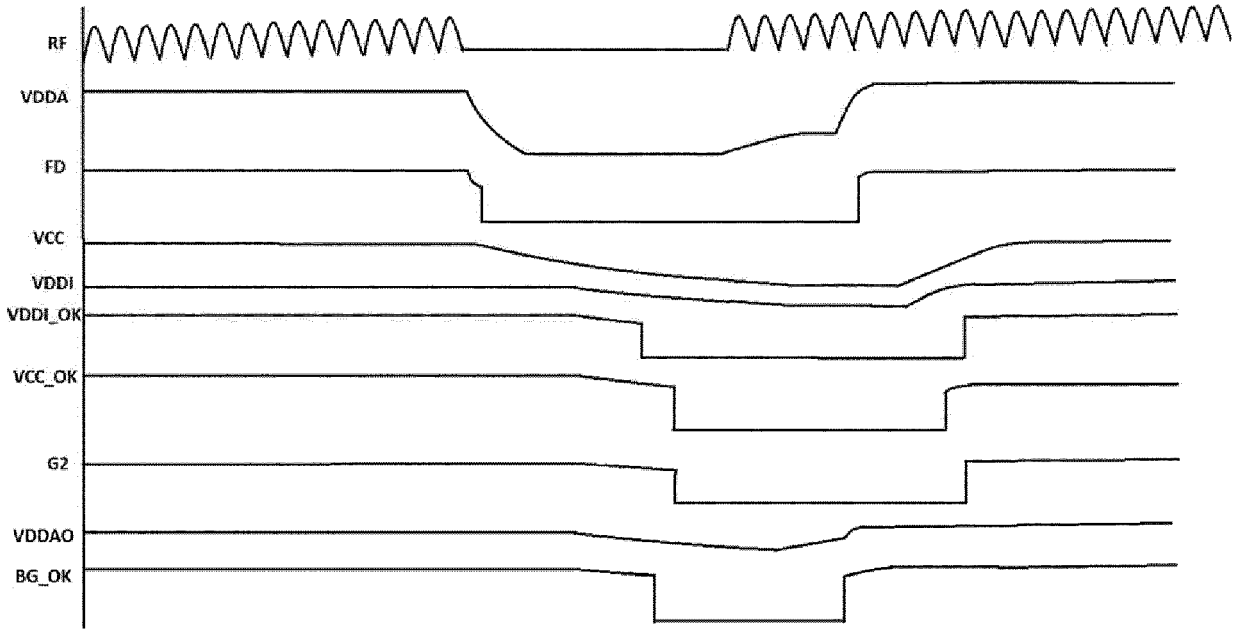

FIG. 4

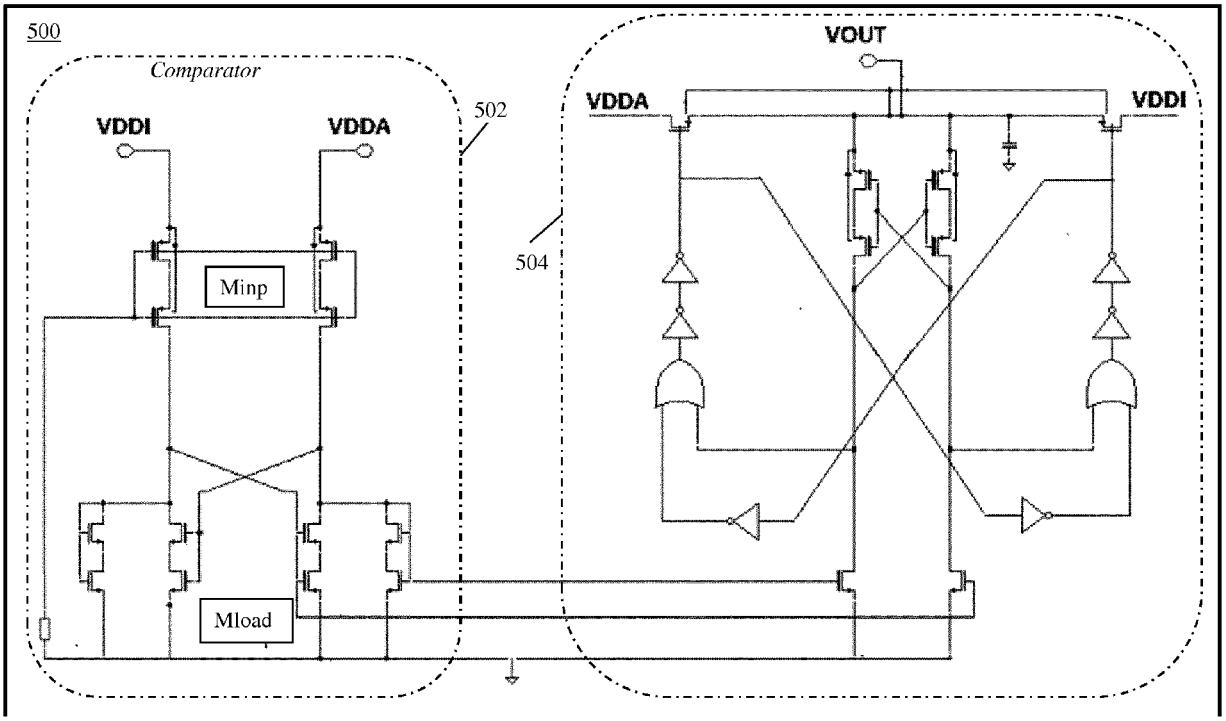

FIG. 5

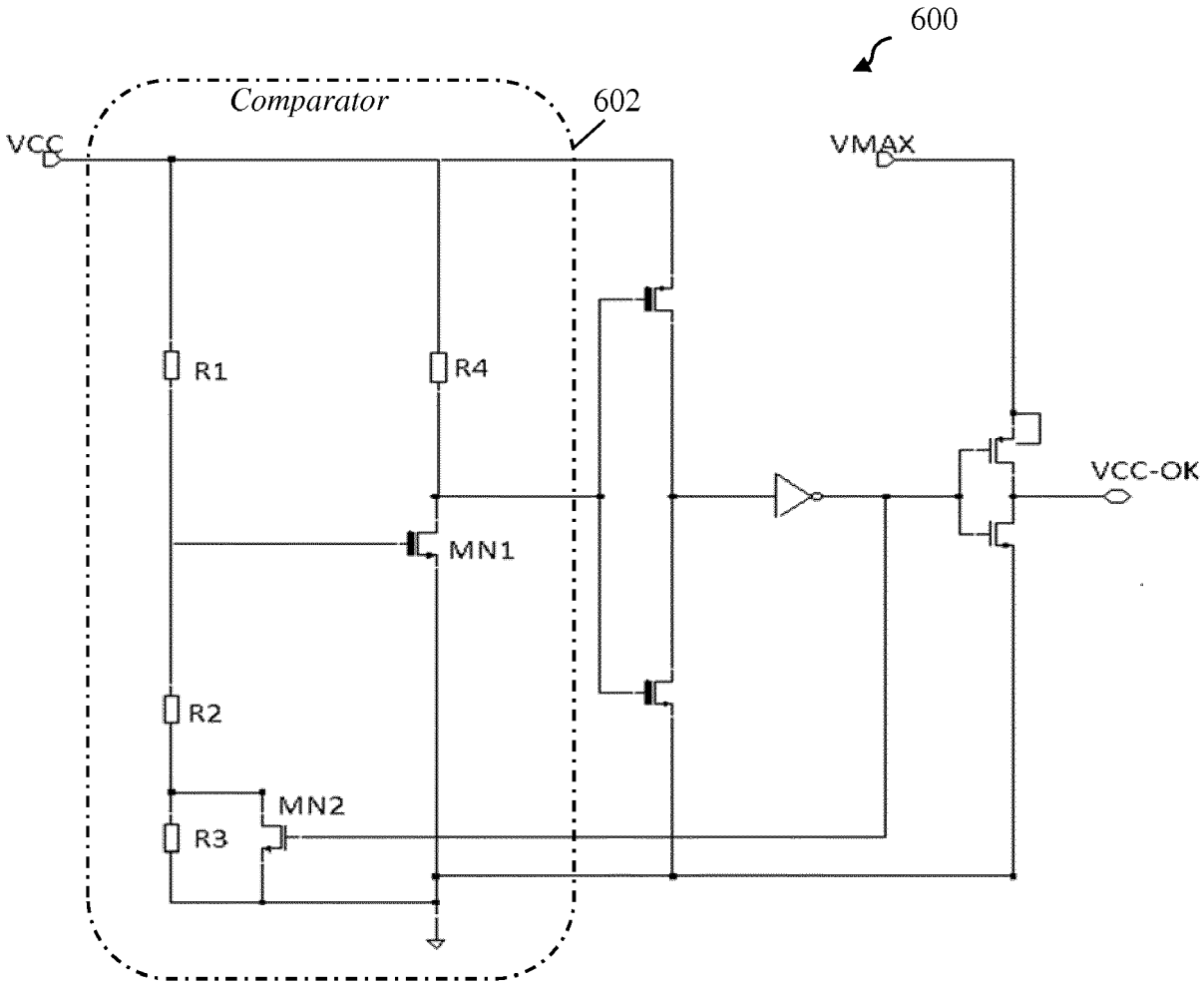

FIG. 6