(19) Europäisches Patentamt
European Patent Office
Office européen des brevets

(11) EP 3 336 043 A1

(12) EUROPEAN PATENT APPLICATION

(43) Date of publication:
20.06.2018 Bulletin 2018/25

(51) Int Cl.:
B66C 23/68 *(2006.01)*

(21) Application number: **16204799.7**

(22) Date of filing: **16.12.2016**

(84) Designated Contracting States:
AL AT BE BG CH CY CZ DE DK EE ES FI FR GB GR HR HU IE IS IT LI LT LU LV MC MK MT NL NO PL PT RO RS SE SI SK SM TR
Designated Extension States:
BA ME
Designated Validation States:
MA MD

(71) Applicant: **Cargotec Patenter AB**
341-81 Ljungby (SE)

(72) Inventor: **SKAGERSTEN, Jon**
824 43 Hudiksvall (SE)

(74) Representative: **Bjerkéns Patentbyrå KB (Gävle)**
Box 1274
801 37 Gävle (SE)

(54) **HYDRAULIC CRANE**

(57) A hydraulic crane comprising:
- a first crane boom (15) pivotable in relation to a column (13) by a first hydraulic cylinder (16);
- a second crane boom (17) pivotable in relation to the first crane boom by a second hydraulic cylinder (18);
- a first link (24) articulately connected to an upper end of the first hydraulic cylinder by a first joint (J1), to the first crane boom by a second joint (J2) and to an inner end of the second hydraulic cylinder by a third joint (J3); and
- a second link (25), which forms a connection between the upper end of the first hydraulic cylinder and the column or between the first link and the column.

The first link (24) guides the third joint (J3) in an arcuate path about the second joint (J2) when the first crane boom is pivoted in relation to the column.

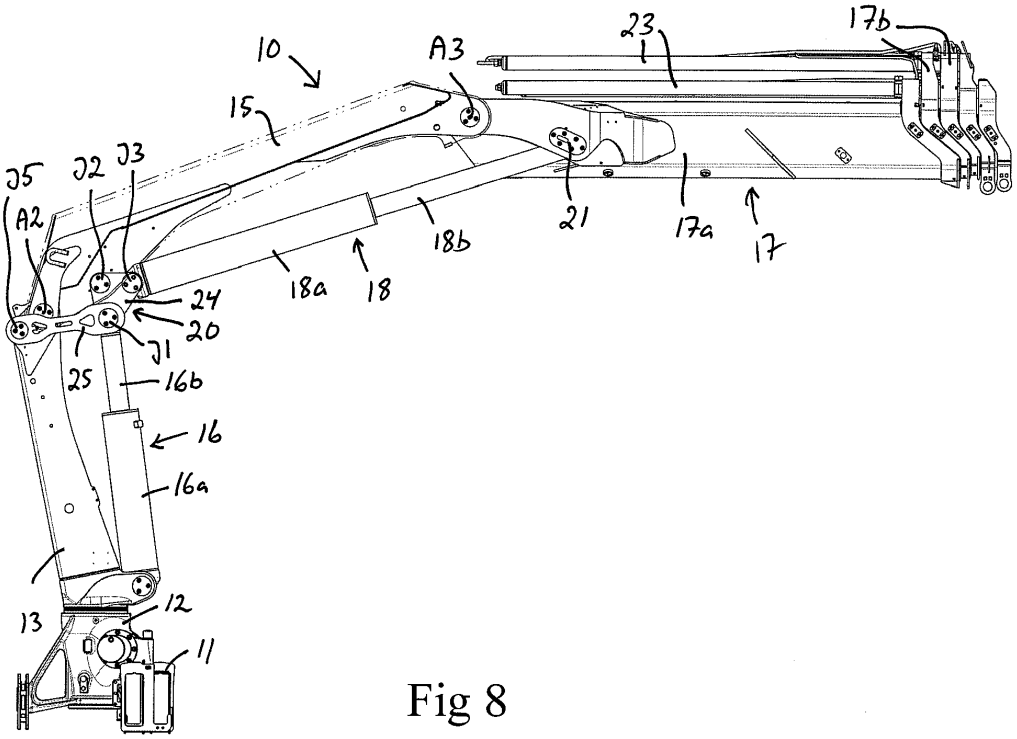

Fig 8

EP 3 336 043 A1

Description

FIELD OF THE INVENTION AND PRIOR ART

[0001] The present invention relates to a hydraulic crane according to the preamble of claim 1.

[0002] A hydraulic crane, for instance in the form of a lorry crane or forestry crane, often comprises a column, which is rotatable about a vertical axis of rotation, and a crane boom system, which is mounted to the column and which is intended to carry a load in a load suspension point at an outer end of the crane boom system, wherein the crane boom system comprises two or more liftable and lowerable crane booms which form a connection between the load suspension point and the column and which are articulately connected to each other.

[0003] In this description and the subsequent claims, the expression "liftable and lowerable crane boom" refers to a crane boom which can be pivoted in a vertical plane so as to thereby perform liftings and lowerings of a load carried by the crane. The expression "hydraulic cylinder for lifting and lowering the crane boom" here refers to the hydraulic cylinder which is associated with the liftable and lowerable crane boom and which carries out the pivoting thereof in a vertical plane.

[0004] A previously known hydraulic crane according to the preamble of claim 1 is illustrated in Figs 1-4. This crane comprises a first crane boom 1 in the form of a so-called inner boom, which is articulately connected to a rotatable column 2, and a second crane boom 3 in the form of a so-called outer boom, which is telescopically extensible and articulately connected to the inner boom 1, wherein the inner boom is 1 pivotable in relation to the column 2 by means of a first hydraulic cylinder 4 in the form of a so-called lifting cylinder and the outer boom 3 is pivotable in relation to the inner boom 1 by means of a second hydraulic cylinder 5 in the form of a so-called outer boom cylinder. In order to increase the angular range of the inner boom 1 and make the lifting moment of the crane more uniform throughout the angular range of the inner boom 1, the upper end of the lifting cylinder 4 of the crane illustrated in Figs 1-4 is connected to the inner boom 1 through a first link 6 and to the column 2 through a second link 7, wherein each one of these links 6, 7 comprises two arms arranged in parallel with each other. The first and second links 6, 7 effect an automatic modification of the point of application of the lifting force exerted by the lifting cylinder 4 as the piston rod of the lifting cylinder is extended and they thereby influence the lever arm of the lifting force exerted by the lifting cylinder 4 in such a manner that the lifting moment of the crane becomes more uniform throughout the angular range of the inner boom 1.

[0005] The previously known crane illustrated in Figs 1-4 is a foldable knuckle boom crane where the inner and outer booms 1, 3 are foldable into a compact parking position when the crane is to be transported or stored, as illustrated in Fig 1. When a hydraulic crane of this type is to be moved from an erected working position to the parking position, the outer boom 3 is first pivoted downwards in relation to the inner boom 1 in order to reduce the angle between the outer and inner booms as much as possible (see Fig 4), whereupon the inner boom 1 is pivoted downwards in relation to the column 2 in order to reduce the angle between the inner boom 1 and the column 2 as much as possible and make the crane assume its final parking position (see Fig 1) with the outer boom 3 in an upwardly inclined position at the side of the column 2. The crane may subsequently be moved from the parking position to the working position by performing these movements of the inner and outer booms 1, 3 in the opposite order.

[0006] A hydraulic crane according to the preamble of claim 1 is also previously known from EP 1 580 159 A1.

SUMMARY OF THE INVENTION

[0007] The object of the present invention is to achieve a further development of a hydraulic crane of the above-mentioned type so as to provide a hydraulic crane that is improved in at least some aspect.

[0008] According to the invention, this object is achieved by means of a hydraulic crane having the features defined in claim 1.

[0009] The hydraulic crane of the present invention comprises:

- a crane base;
- a column, which is rotatably mounted to the crane base so as to be rotatable in relation to the crane base about an essentially vertical first axis of rotation;
- a liftable and lowerable first crane boom, which is articulately connected to the column so as to be pivotable in relation to the column about an essentially horizontal second axis of rotation;
- a first hydraulic cylinder for lifting and lowering the first crane boom in relation to the column, the first hydraulic cylinder having a lower end and an opposite upper end, wherein the first hydraulic cylinder at its lower end is articulately connected to the column;
- a liftable and lowerable second crane boom, which is articulately connected to the first crane boom so as to be pivotable in relation to the first crane boom about an essentially horizontal third axis of rotation;
- a second hydraulic cylinder for lifting and lowering the second crane boom in relation to the first crane boom, the second hydraulic cylinder having an inner end facing the column and an opposite outer end facing the second crane boom;
- a first link, through which the upper end of the first hydraulic cylinder is connected to the first crane boom, wherein the first link is articulately connected to the upper end of the first hydraulic cylinder by a first joint and articulately connected to the first crane boom by a second joint; and

- a second link, which forms a connection between the upper end of the first hydraulic cylinder and the column or between the first link and the column.

[0010] According to the invention, the inner end of the second hydraulic cylinder is connected to the first crane boom through the above-mentioned first link, wherein the first link is articulately connected to the inner end of the second hydraulic cylinder by a third joint. The first link is configured to mechanically guide the third joint in an arcuate path about the second joint when the first crane boom is pivoted about said second axis of rotation under the effect of the first hydraulic cylinder. The first link will consequently effect an automatic movement of the inner end of the second hydraulic cylinder in relation to the first crane boom when the first crane boom is pivoted in relation to the column, which will give certain advantages as explained in closer detail in the description following below.

[0011] Further advantageous features of the hydraulic crane according to the present invention will appear from the description following below and the dependent claims.

BRIEF DESCRIPTION OF THE DRAWINGS

[0012] With reference to the appended drawings, a specific description of embodiments of the invention cited as examples follows below. In the drawings:

Fig 1 is a frontal view of a hydraulic crane according to prior art, as seen in a compact parking position,

Fig 2 is a lateral view of the hydraulic crane of Fig 1, as seen in an erected working position with the outer boom cylinder fully extended,

Fig 3 is a lateral view of the hydraulic crane of Fig 1, as seen in another erected working position,

Fig 4 is a frontal view of the hydraulic crane of Fig 1, as seen in an intermediate position between the parking position illustrated in Fig 1 and the working position illustrated in Fig 2,

Fig 5 is a frontal view of a hydraulic crane according to a first embodiment of the present invention, as seen in a compact parking position,

Fig 6 is a lateral view of the hydraulic crane of Fig 5, as seen in an erected working position with the outer boom cylinder fully extended,

Fig 7 is a planar view from above of the hydraulic crane of Fig 5, as seen in the erected working position illustrated in Fig 6,

Fig 8 is a lateral view of the hydraulic crane of Fig 5, as seen in another erected working position,

Fig 9 is a frontal view of the hydraulic crane of Fig 5, as seen in an intermediate position between the parking position illustrated in Fig 5 and the working position illustrated in Fig 6,

Fig 10 is a detail enlargement of a section from Fig 5,

Fig 11 is a detail enlargement of a section from Fig 9,

Fig 12 is a frontal view of a hydraulic crane according to a second embodiment of the invention, as seen in a compact parking position,

Fig 13 is a lateral view of the hydraulic crane of Fig 12, as seen in an erected working position,

Fig 14 is a frontal view of the hydraulic crane of Fig 12, as seen in an intermediate position between the parking position and the working position,

Fig 15 is a lateral view of a hydraulic crane according to a third embodiment of the invention, as seen in an erected working position, and

Fig 16 is a lateral view of a hydraulic crane according to a fourth embodiment of the invention, as seen in an erected working position.

DETAILED DESCRIPTION OF EMBODIMENTS OF THE INVENTION

[0013] A hydraulic crane 10 according to different embodiments of the present invention is illustrated in Figs 5-16. The crane 10 is for instance a lorry crane or forestry crane. The crane 10 is mounted on a frame 11, which for instance may be connected to the chassis of a lorry or a forestry vehicle. The frame 11 may be provided with adjustable support legs (not shown) for supporting the crane 10.

[0014] The crane 10 comprises:

- a crane base 12, which is fixed to the frame 11;
- a column 13, which is rotatably mounted to the crane base 12 so as to be rotatable in relation to the crane base about an essentially vertical axis of rotation A1 by means of an actuating device 14;
- a liftable and lowerable first crane boom 15, in the following denominated inner boom, which is articulately connected to the column 13 in such a manner that it is pivotable in relation to the column about an essentially horizontal axis of rotation A2;
- a first hydraulic cylinder 16, in the following denominated lifting cylinder, for lifting and lowering the inner

boom 15 in relation to the column 13;

- a liftable and lowerable second crane boom 17, in the following denominated outer boom, which is articulately connected to the inner boom 15 in such a manner that it is pivotable in relation to the inner boom about an essentially horizontal axis of rotation A3; and
- a second hydraulic cylinder 18, in the following denominated outer boom cylinder, for lifting and lowering the outer boom 17 in relation to the inner boom 15.

[0015] In the illustrated examples, the lifting cylinder 16 comprises a cylinder part 16a which is articulately connected to the column 13, and a piston which is received in the cylinder part 16a and displaceable in relation to it, wherein the piston is fixed to a piston rod 16b which is articulately connected to the inner boom 15 through a link system 20. The outer boom cylinder 18 has an inner end facing the column 13 and an opposite outer end facing the outer boom 17. In the illustrated examples, the outer boom cylinder 18 comprises a cylinder part 18a which is articulately connected to the inner boom 15 through the link system 20, and a piston which is received in the cylinder part 18a and displaceable in relation to it, wherein the piston is fixed to a piston rod 18b which is articulately connected to the outer boom 17. In the embodiments illustrated in Figs 5-14 and 16, the piston rod 18b of the outer boom cylinder is articulately connected directly to the outer boom 17 by a joint 21 provided on the outer boom. As an alternative, the piston rod 18b of the outer boom cylinder may be articulately connected to the outer boom 17 through a link system 22 of conventional type, as illustrated in Fig 15.

[0016] The outer boom 17 is telescopically extensible to enable an adjustment of the extension length thereof. The outer boom 17 comprises a base section 17a, through which the outer boom 17 is articulately connected to the inner boom 15, and several telescopic crane boom sections 17b which are carried by the base section 17a and displaceable in the longitudinal direction of the base section by means of hydraulic cylinders 23 for adjustment of the extension length of the outer boom 17. A load handling tool (not shown) is to be mounted to the outer end of the outer boom 17.

[0017] The above-mentioned link system 20 at the upper end of the lifting cylinder 16 comprises a first link 24, through which the upper end of the lifting cylinder 16, i. e. in the illustrated example the upper end of the piston rod 16b, is connected to the inner boom 15. The first link 24 is articulately connected to the upper end of the lifting cylinder 16 by a first joint J1, which forms an essentially horizontal axis of rotation, and articulately connected to the inner boom 15 by a second joint J2, which forms another essentially horizontal axis of rotation that extends in parallel with the axis of rotation formed by said first joint J1. Furthermore, the first link 24 is articulately connected to the inner end of the outer boom cylinder 18, i.e. in the illustrated example the inner end of the cylinder part 18a, by a third joint J3, which forms another essentially horizontal axis of rotation that extends in parallel with the axis of rotation formed by said first joint J1. Thus, the first link 24 is arranged to form a connection between the upper end of the lifting cylinder 16, the inner end of the outer boom cylinder 18 and the inner boom 15.

[0018] For the sake of clarity, the lateral walls of the inner boom 15 are illustrated in broken lines in Figs 5-16. The inner boom 15 has a U-shaped cross-sectional shape with a downwardly facing opening. An upper end of the first link 24 is received in an inner space of the inner boom 15 between the opposite lateral walls of the inner boom, wherein the first link 24 extends through a downwardly facing opening between these lateral walls.

[0019] The link system 20 also comprises a second link 25, which is arranged to form a connection between the upper end of the first hydraulic cylinder 16 and the column 13 or between the first link 24 and the column 13. In the embodiments illustrated in Figs 5-15, the second link 25 forms a connection between the upper end of the lifting cylinder 16 and the column 13. In this case, the second link 25 is at a first end articulately connected to the upper end of the lifting cylinder 16 by the above-mentioned first joint J1 and at an opposite second end articulately connected to the column 13 by another joint J5, which forms an essentially horizontal axis of rotation that extends in parallel with the axis of rotation formed by the first joint J1.

[0020] In the embodiment illustrated in Fig 16, the second link 25 forms a connection between the first link 24 and the column 13. In this case, the second link 25 is at a first end articulately connected to the first link 24 by a fourth joint J4, which forms an essentially horizontal axis of rotation that extends in parallel with the axis of rotation formed by the first joint J1, and at an opposite second end articulately connected to the column 13 by another joint J5, which forms an essentially horizontal axis of rotation that extends in parallel with the axis of rotation formed by the fourth joint J4. The fourth joint J4 is located on the first link 24 between the first and second joints J1, J2.

[0021] In the illustrated embodiments, the second link 25 comprises two link elements which are arranged in parallel with each other on opposite sides of the column 13.

[0022] The first link 24 is configured to mechanically guide the third joint J3 in an arcuate path 26 (see Figs 10 and 11) about the second joint J2 when the inner boom 15 is pivoted in relation to the column 13 about the second axis of rotation A2 under the effect of the lifting cylinder 16. Hereby, the distance between the second axis or rotation A2 and the third joint J3, and thereby also the distance between the second axis or rotation A2 and the inner end of the outer boom cylinder 18, will vary when the piston rod 16b of the lifting cylinder 16 is extended in order to pivot the inner boom 15 upwards in relation to the column 13 and when the piston rod 16b of the lifting

cylinder is retracted in order to pivot the inner boom 15 downwards in relation to the column 13. The movement of the inner end of the outer boom cylinder 18 in relation to the second axis of rotation A2 caused by the pivoting movement of the first link 24 will in its turn result in a pivoting movement of the outer boom 17 in relation to the inner boom 15 about the third axis of rotation A3, as clearly shown in Figs 5 and 9 and in Figs 12 and 14.

[0023] The crane 10 is a foldable knuckle boom crane, wherein the inner and outer booms 15, 17 of the crane are foldable into a compact parking position when the crane is to be transported or stored, as illustrated in Figs 5 and 12. The telescopic crane boom sections 17b of the outer boom 17 are laterally offset in relation to the inner boom 15 and arranged to extend in parallel with and at the side of the inner boom 15, as illustrated in Fig 7. When the inner and outer booms 15, 17 are to be folded into the parking position from an erected working position, the telescopic crane boom sections 17b of the outer boom 17 are first retracted into the base section 17a of the outer boom in order to make the outer boom as short as possible, whereupon the outer boom 17 is folded downwards towards the inner boom 15 by retracting the piston rod 18b of the outer boom cylinder 18 as far as possible into the cylinder part 18a of the outer boom cylinder and thereby reducing the angle between the inner and outer booms 15, 17, as illustrated in Figs 9 and 14. Thereafter, the inner boom 15 is folded downwards together with the outer boom 17 towards the frame 11 from the intermediate position illustrated in Figs 9 and 14 to the final parking position illustrated in Figs 5 and 12 by retracting the piston rod 16b of the lifting cylinder 16 as far as possible into the cylinder part 16a of the lifting cylinder and thereby reducing the angle between the inner boom 15 and the column 13 as much as possible. The inner and outer booms 15, 17 are moved in the opposite manner when they are to be moved from the parking position to the erected working position. Thus, when the hydraulic crane 10 is moved from the parking position to a working position, the inner boom 15 is first pivoted upwards in relation to the column 13 about the second axis of rotation A2 by extending the piston rod 16b of the lifting cylinder 16, whereupon the outer boom 17 is pivoted upwards in relation to the inner boom 15 about the third axis of rotation A3 by extending the piston rod 18b of the outer boom cylinder 18.

[0024] When the inner boom 15 is pivoted in a first rotary direction about the second axis of rotation A2 from the folded parking position illustrated in Figs 5 and 12 to the essential horizontal position illustrated in Figs 9 and 14, the piston rod 16b of the lifting cylinder 16 will act on the first link 24 in such a manner that the first link is forced to rotate in relation to the inner boom 15 about the second joint J2 in an opposite second rotary direction. By this rotation of the first link 24, the third joint J3 is moved downwards and forwards in relation to the inner boom 15, whereby the distance between the second axis of rotation A2 and the third joint J3, and thereby the distance between the second axis of rotation A2 and the inner end of the outer boom cylinder 18, is increased, which in its turn implies that the outer boom 17 is automatically made to pivot somewhat upwards in relation to the inner boom 15 about the third axis of rotation A3. This automatic pivoting movement of the outer boom 17 is achieved without any extension of the piston rod 18b of the outer boom cylinder 18, which consequently will increase the angular range that can be achieved between the inner and outer booms 15, 17 by means of an outer boom cylinder 18 having a given length of stroke.

[0025] Except for the connection of the inner end of the outer boom cylinder 18 to the first link 24, the crane 10 according to the first embodiment of the invention illustrated in Figs 5-11 has exactly the same design as the prior art crane illustrated in Figs 1-4. Thus, in the embodiment illustrated in Figs 5-11, the outer boom cylinder 18 has the same length of stroke as the outer boom cylinder 5 included in the prior art crane shown in Figs 1-4, the inner end of the outer boom cylinder 18 has the same position in relation to the column 13 and the inner boom 15 in the parking position of the crane as the inner end of the outer boom cylinder 5 included in the prior art crane shown in Figs 1-4, and the joint 21 between the outer end of the outer boom cylinder 18 and the outer boom 17 has the same position on the outer boom as the corresponding joint of the prior art crane shown in Figs 1-4. In the embodiment illustrated in Figs 5-11, the above-mentioned movement of the inner end of the outer boom cylinder 18 in relation to the second axis of rotation A2 and in relation to the inner boom 15 has been utilized in order to increase the maximum angle between the inner and outer booms 15, 17 in the fully extended position of outer boom cylinder 18 and to increase the lifting capacity of the joint between the inner boom 15 and the outer boom 17 within the normal working region of the inner boom 15.

[0026] Fig 2 illustrates the prior art crane with the outer boom cylinder 5 fully extended and Fig 6 illustrates the crane 10 according to the first embodiment of the invention with the outer boom cylinder 18 fully extended. At the corresponding positions illustrated in Figs 2 and 6, the outer boom 3 of the prior art crane is essentially in line with the inner boom 1, whereas the outer boom 17 of the crane 10 according to the first embodiment of the invention is inclined slightly upwards in relation to the inner boom 15.

[0027] Figs 3 and 8 illustrate the prior art crane and the crane 10 according to the first embodiment of the invention in one and the same working position, i.e. with the inner boom 15 of the crane 10 in the same inclination in relation to the column 13 as the inner boom 1 of the prior art crane and with the outer boom 17 or the crane 10 in the same inclination in relation to the inner boom 15 as the outer boom 3 of the prior art crane. At the corresponding working positions illustrated in Figs 3 and 8, the moment arm of the force acting on the third axis of rotation A3, i.e. the moment arm of the force exerted by

the outer boom cylinder 5, 18, is somewhat longer in the crane 10 according to the first embodiment of the invention illustrated in Fig 8 as compared to the prior art crane illustrated in Fig 3, which implies that the joint between the inner boom 15 and the outer boom 17 of the crane 10 according to the first embodiment of the invention has a higher lifting capacity at this working position as compared to the prior art crane.

[0028] In the second embodiment of the invention illustrated in Figs 12-14, the position of the joint 21 between the outer end of the outer boom cylinder 18 and the outer boom 17 has been slightly altered as compared to the prior art crane illustrated in Figs 1-4 and as compared to the crane 10 according to the first embodiment illustrated in Figs 5-11. Except for the connection of the inner end of the outer boom cylinder 18 to the first link 24 and the altered position of said joint 21, the crane 10 according to the second embodiment of the invention illustrated in Figs 12-14 has exactly the same design as the prior art crane illustrated in Figs 1-4. Thus, in the embodiment illustrated in Figs 12-14, the outer boom cylinder 18 has the same length of stroke as the outer boom cylinder 5 included in the prior art crane shown in Figs 1-4, and the inner end of the outer boom cylinder 18 has the same position in relation to the column 13 and the inner boom 15 in the parking position of the crane 10 as the inner end of the outer boom cylinder 5 included in the prior art crane shown in Figs 1-4. In the embodiment illustrated in Figs 12-14, the above-mentioned movement of the inner end of the outer boom cylinder 18 in relation to the second axis of rotation A2 and in relation to the inner boom 15 has been utilized in order to reduce the angle between the inner and outer booms 15, 17 in the parking position of the crane 10 and thereby reduce the width required for the outer boom 17 in the parking position, as appears from a comparison of Figs 1 and 12. This reduced space requirement for the outer boom 17 in the parking position makes it possible to increase the length of the outer boom 17 without exceeding the maximum allowed width of the crane 10 in the parking position, which in its turn implies that the length of the outer boom 17 in its fully extended state, and thereby the range of the crane, can be increased by increasing the length of the base section 17a and the telescopic crane boom sections 17b and/or by increasing the number of telescopic crane boom sections 17b.

[0029] It will be apparent to a person skilled in the art that the movement of the inner end of the outer boom cylinder 18 in relation to the second axis of rotation A2 and in relation to the inner boom 15 achieved by means of the first link 24 also can be utilized in order to alter the characteristics of the crane in other desired and favourable manners.

[0030] The invention is of course not in any way restricted to the embodiments described above. On the contrary, many possibilities to modifications thereof will be apparent to a person with ordinary skill in the art without departing from the basic idea of the invention such as defined in the appended claims.

Claims

1. A hydraulic crane comprising:

- a crane base (12);
- a column (13), which is rotatably mounted to the crane base (12) so as to be rotatable in relation to the crane base about an essentially vertical first axis of rotation (A1);
- a liftable and lowerable first crane boom (15), which is articulately connected to the column (13) so as to be pivotable in relation to the column about an essentially horizontal second axis of rotation (A2);
- a first hydraulic cylinder (16) for lifting and lowering the first crane boom (15) in relation to the column (13), the first hydraulic cylinder (16) having a lower end and an opposite upper end, wherein the first hydraulic cylinder (16) at its lower end is articulately connected to the column (13);
- a liftable and lowerable second crane boom (17), which is articulately connected to the first crane boom (15) so as to be pivotable in relation to the first crane boom about an essentially horizontal third axis of rotation (A3);
- a second hydraulic cylinder (18) for lifting and lowering the second crane boom (17) in relation to the first crane boom (15), the second hydraulic cylinder (18) having an inner end facing the column (13) and an opposite outer end facing the second crane boom (17);
- a first link (24), through which the upper end of the first hydraulic cylinder (16) is connected to the first crane boom (15), wherein the first link (24) is articulately connected to the upper end of the first hydraulic cylinder (16) by a first joint (J1) and articulately connected to the first crane boom (15) by a second joint (J2); and
- a second link (25), which forms a connection between the upper end of the first hydraulic cylinder (16) and the column (13) or between the first link (24) and the column (13),

characterized in that the inner end of the second hydraulic cylinder (18) is connected to the first crane boom (15) through the first link (24), wherein the first link (24) is articulately connected to the inner end of the second hydraulic cylinder (18) by a third joint (J3), and wherein the first link (24) is configured to mechanically guide the third joint (J3) in an arcuate path (26) about the second joint (J2) when the first crane boom (15) is pivoted in relation to the column (13) about said second axis of rotation (A2) under the effect of the first hydraulic cylinder (16).

2. A hydraulic crane according to claim 1 **characterized in that** the second link (25) at a first end is articulately connected to the upper end of the first hydraulic cylinder (16) by the first joint (J1) and at an opposite second end is articulately connected to the column (13) by another joint (J5).

3. A hydraulic crane according to claim 1 **characterized in that** the second link (25) at a first end is articulately connected to the first link (24) by a fourth joint (J4) located between the first and second joints (J1, J2) and at an opposite second end is articulately connected to the column (13) by another joint (J5).

4. A hydraulic crane according to any of claims 1-3 **characterized in that** the hydraulic crane (10) is a foldable knuckle boom crane which is moveable between a compact parking position and an erected working position, wherein the first crane boom (15) is configured to be pivoted upwards in relation to the column (13) about said second axis of rotation (A2), whereupon the second crane boom (17) is configured to be pivoted upwards in relation to the first crane boom (15) about said third axis of rotation (A3), when the hydraulic crane (10) is moved from the parking position to the working position.

5. A hydraulic crane according to any of claims 1-4 **characterized in that** the second link (25) comprises two link elements which are arranged in parallel with each other on opposite sides of the column (13).

6. A hydraulic crane according to any of claims 1-5 **characterized in that** the second hydraulic cylinder (18) at its outer end is articulately connected to the second crane boom (17) through a joint (21).

7. A hydraulic crane according to any of claims 1-5 **characterized in that** the second hydraulic cylinder (18) at its outer end is articulately connected to the second crane boom (17) through a link system (22).

8. A hydraulic crane according to any of claims 1-7, **characterized in that** the second crane boom (17) is telescopically extensible so as to enable an adjustment of the extension length thereof.

9. A hydraulic crane according to any of claims 1-8, **characterized in that** the hydraulic crane (10) is a lorry crane or forestry crane.

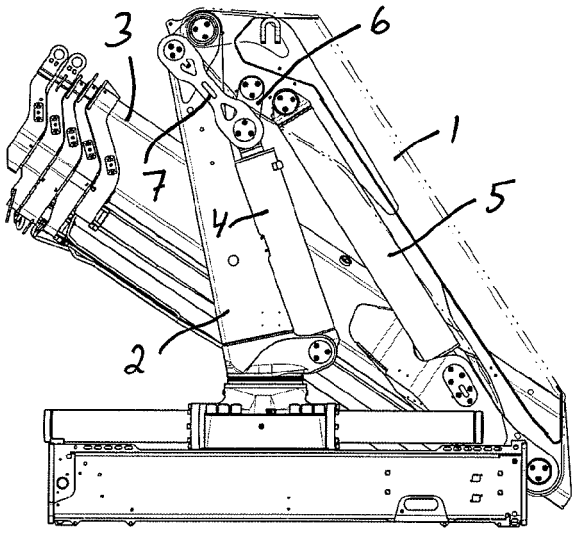

Fig 1

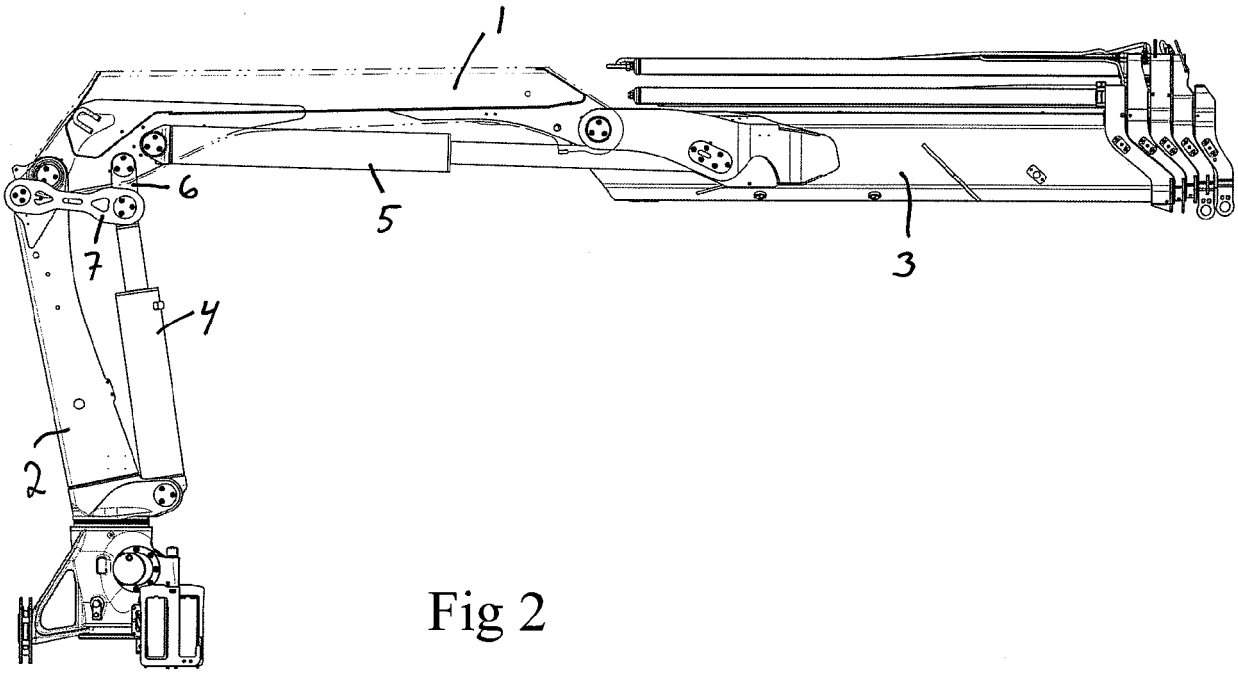

Fig 2

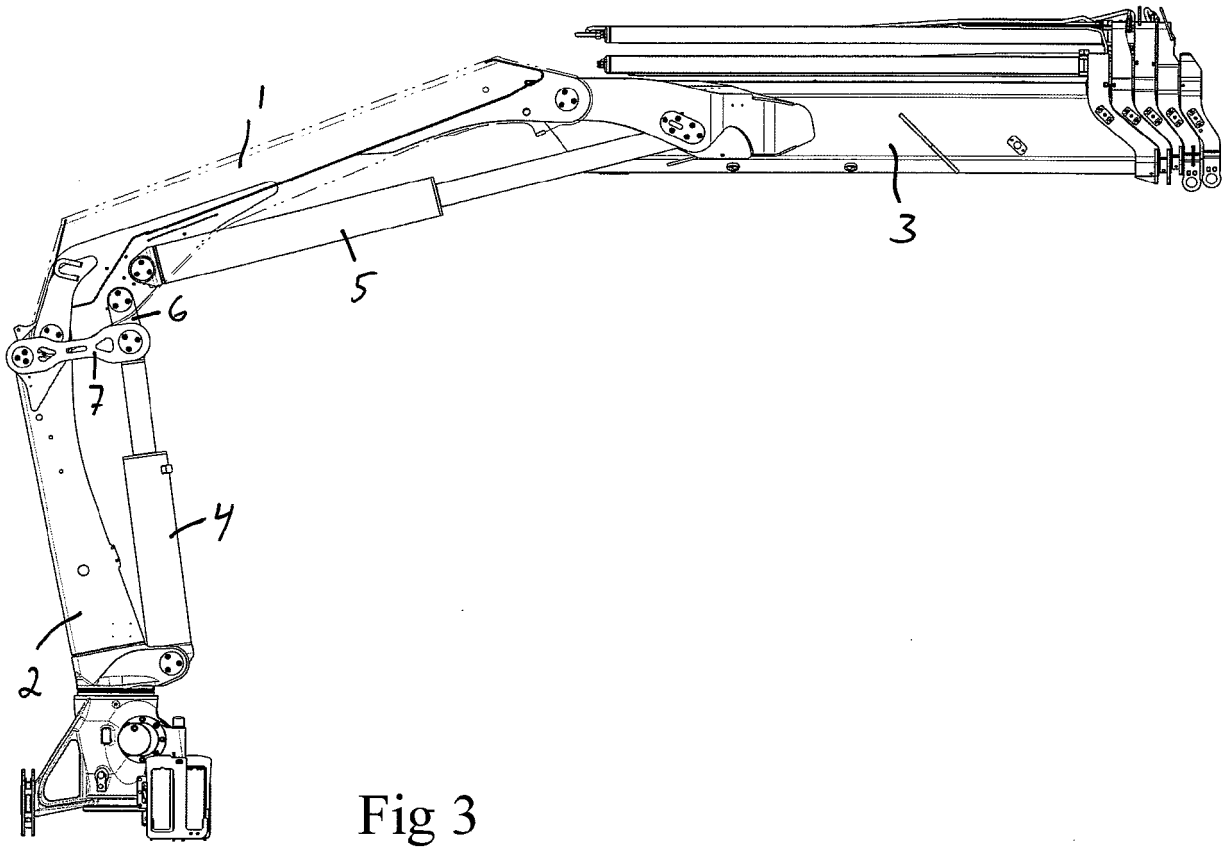

Fig 3

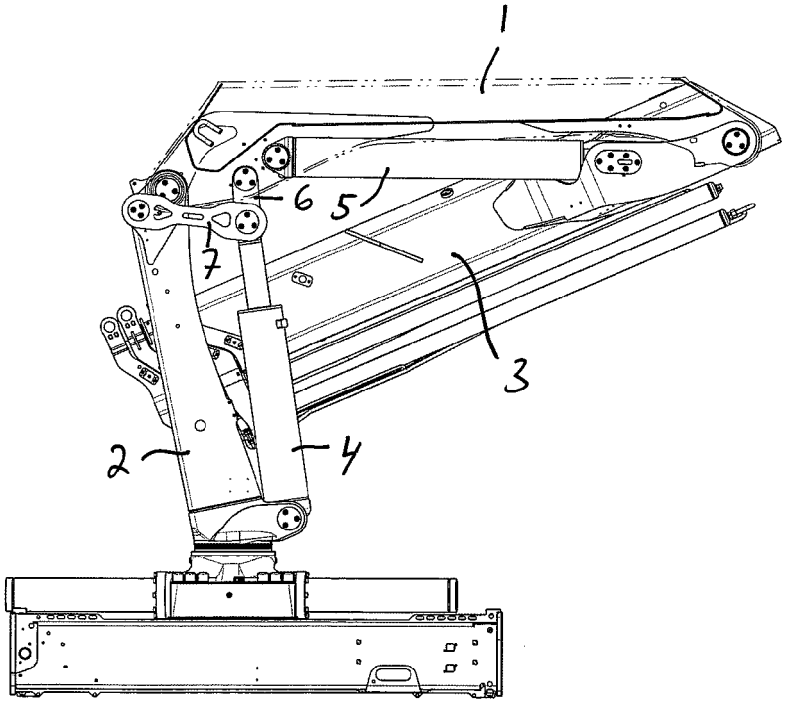

Fig 4

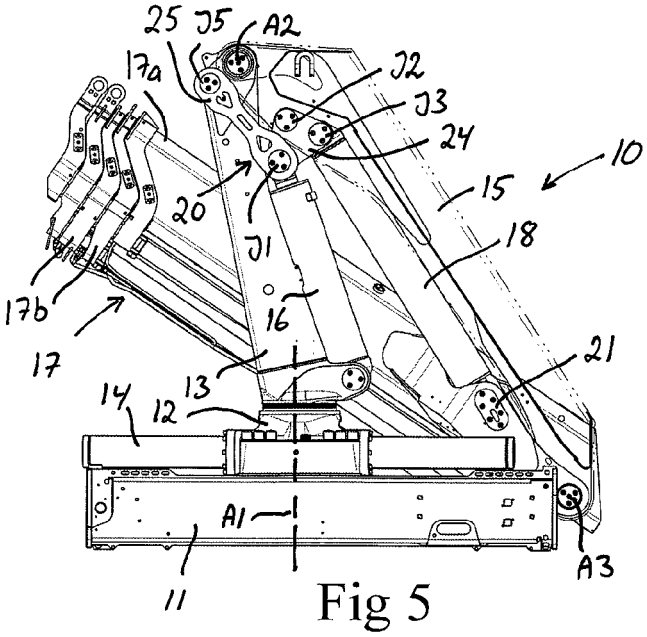

Fig 5

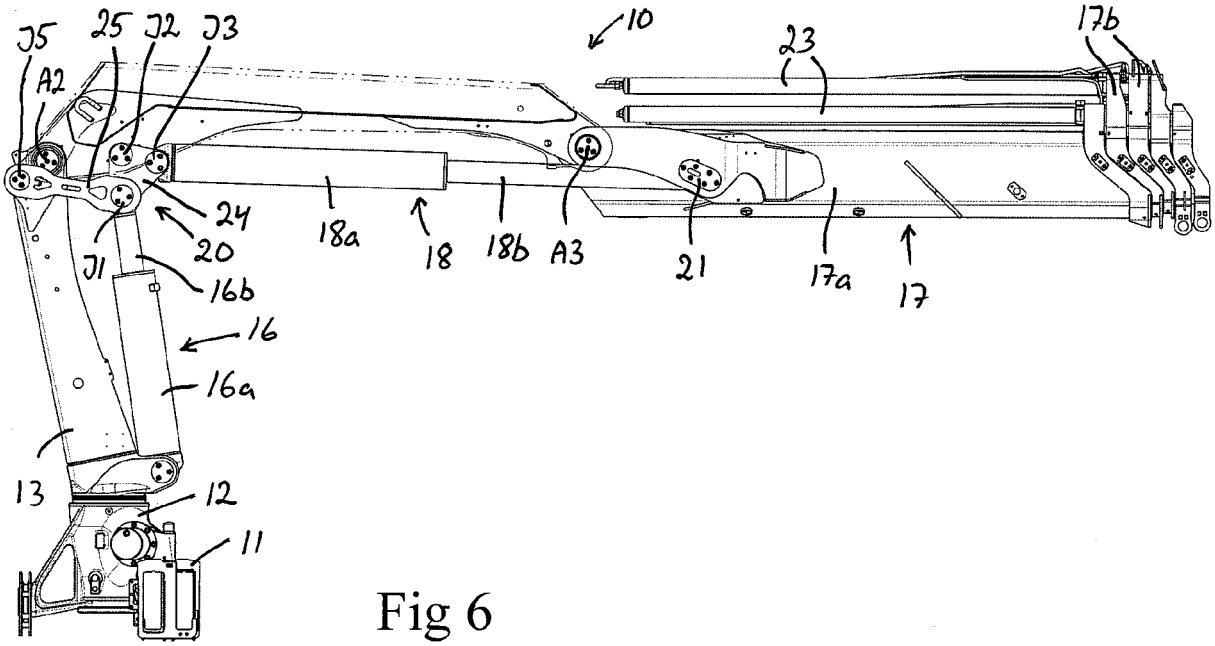

Fig 6

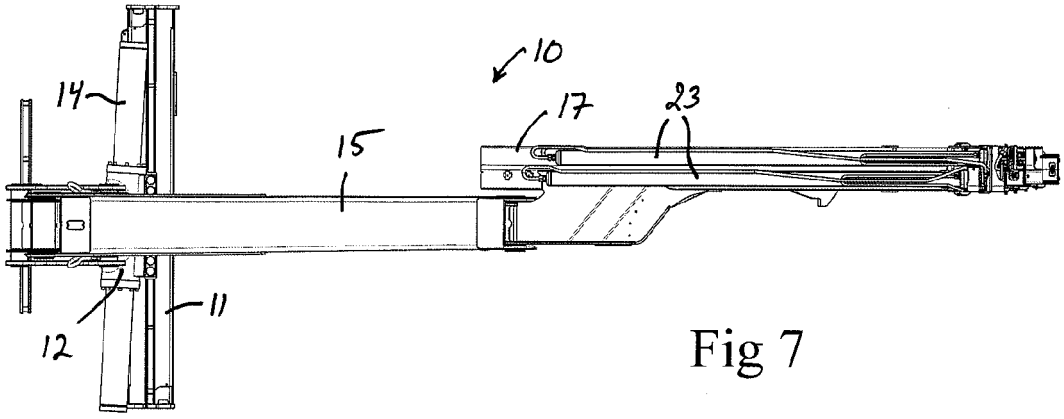

Fig 7

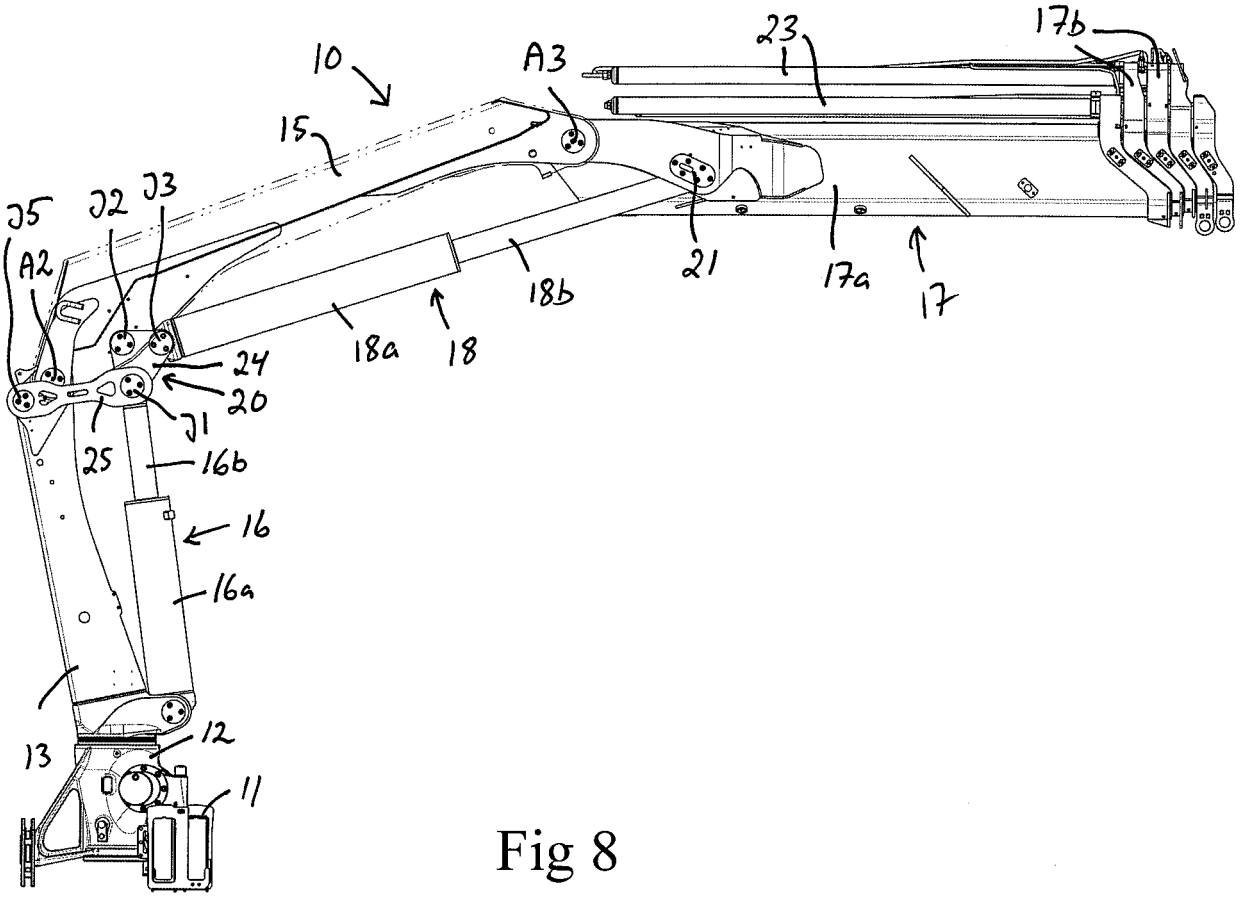
10
A3
23
17b
15
J5
J2
J3
A2
21
17a
17
18b
18a
18
24
20
J1
25
16b
16
16a
13
12
11

Fig 8

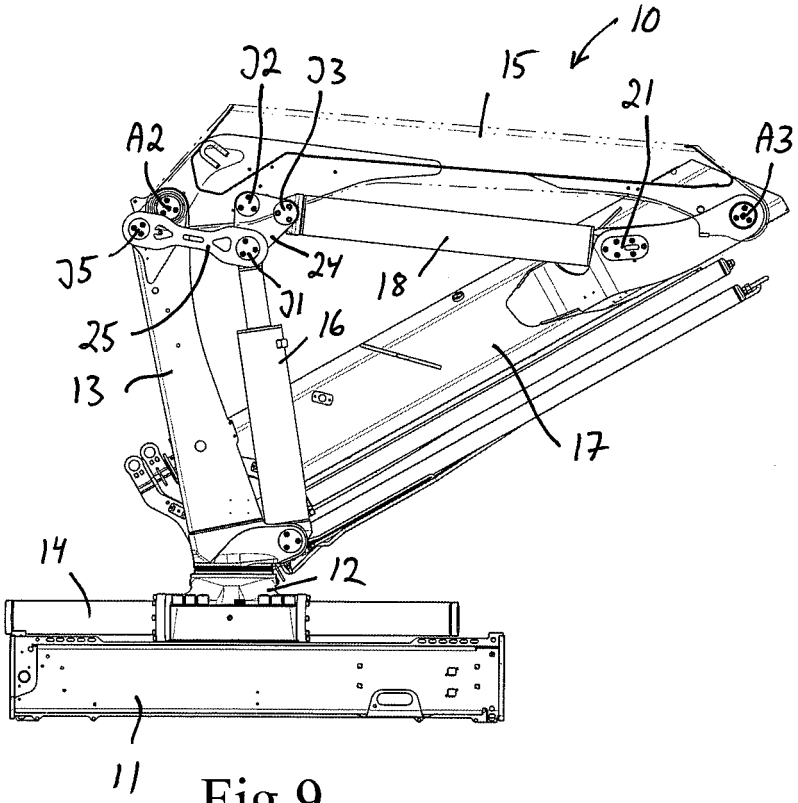
10
J2
J3
15
21
A2
A3
J5
24
18
J1
25
16
13
17
14
12
11

Fig 9

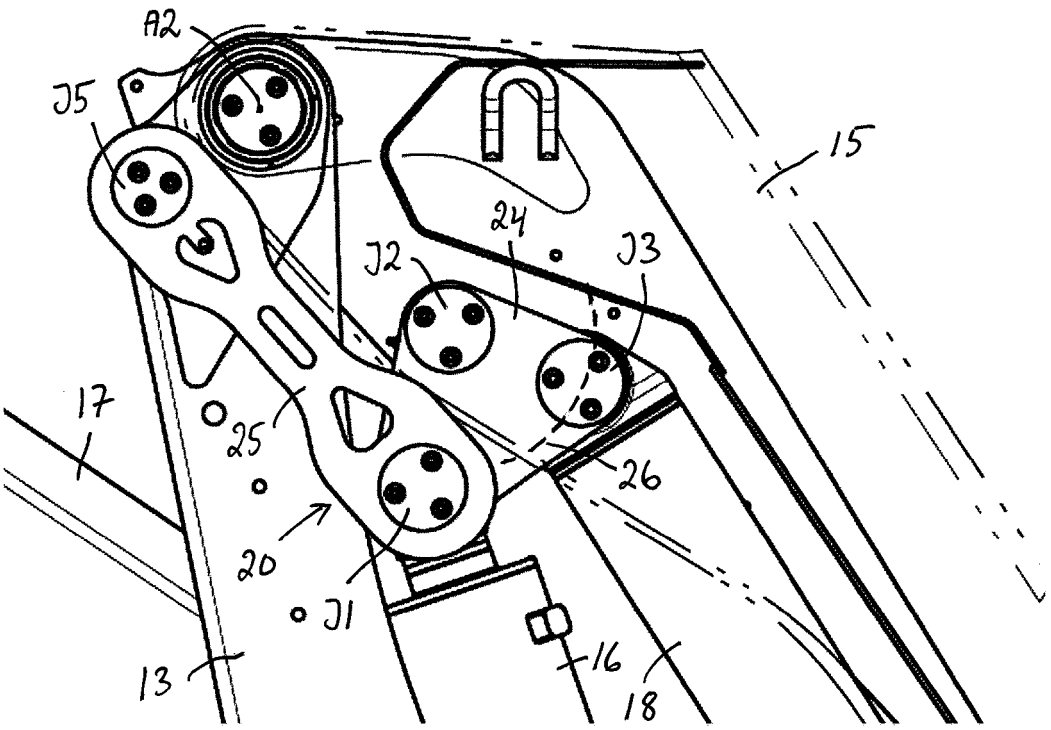
A2
J5
15
24
J2
J3
17
25
26
20
J1
16
13
18

Fig 10

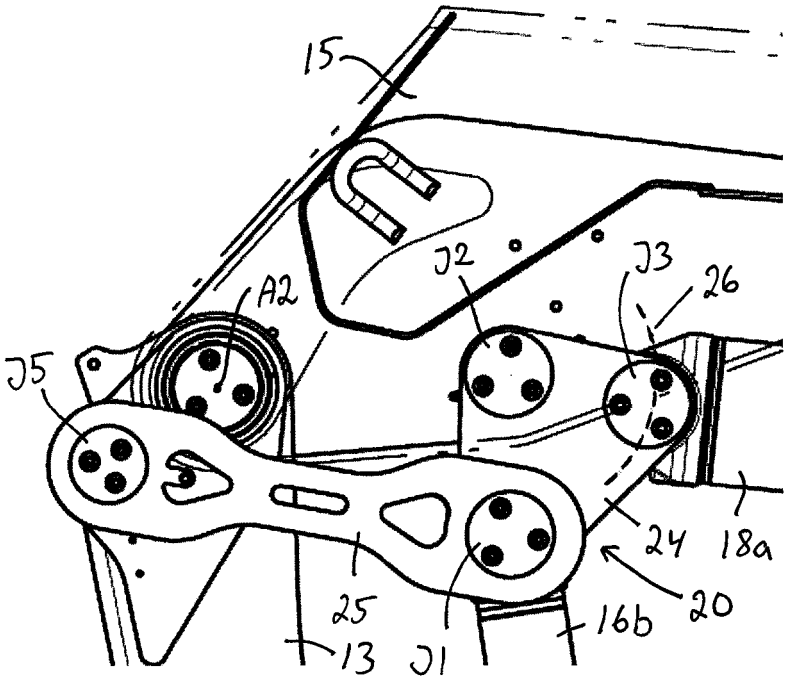
15
J2
J3
26
A2
J5
24
18a
25
20
16b
13
J1

Fig 11

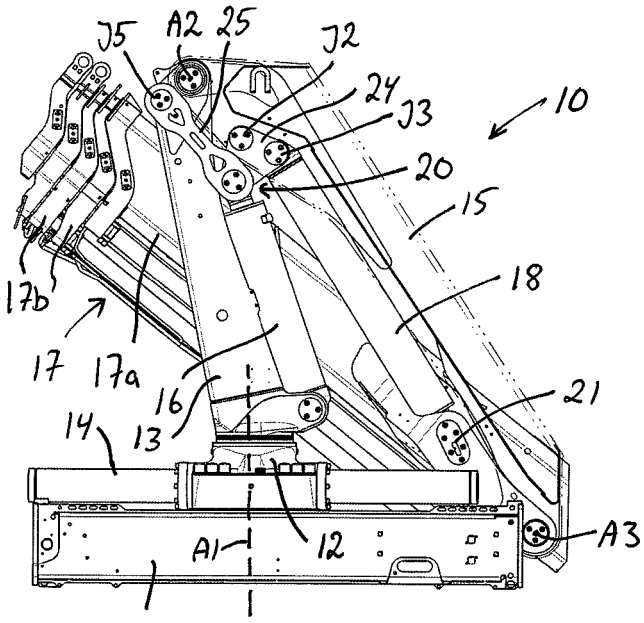
J5
A2
25
J2
24
J3
10
20
15
18
17b
17
17a
16
21
14
13
A1
12
A3
11

Fig 12

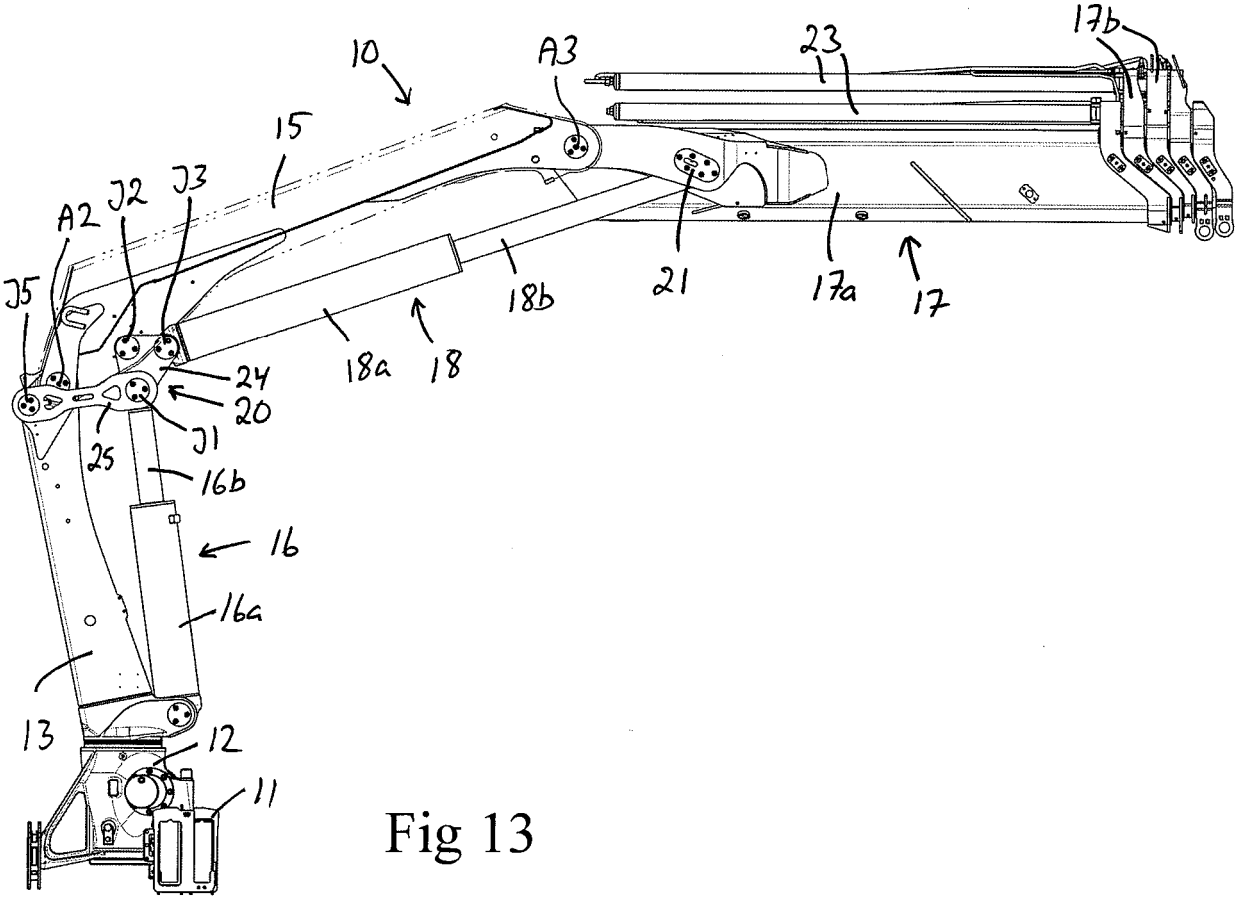
10
A3
23
17b
15
A2
J2
J3
J5
21
17a
17
18b
18a
18
24
20
J1
25
16b
16
16a
13
12
11

Fig 13

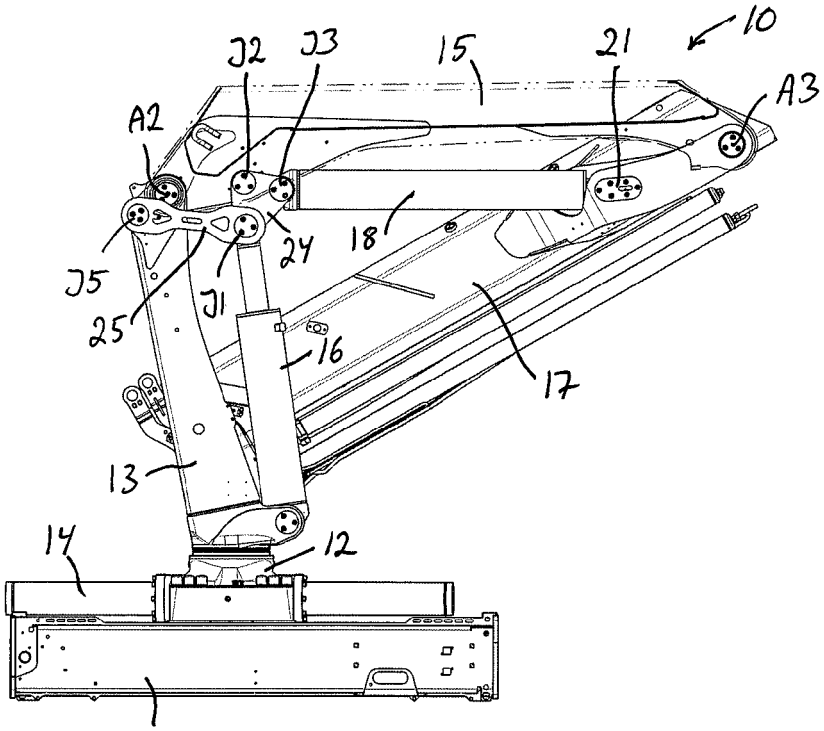
10
J2
J3
15
21
A3
A2
J5
24
18
25
J1
16
17
13
14
12
11

Fig 14

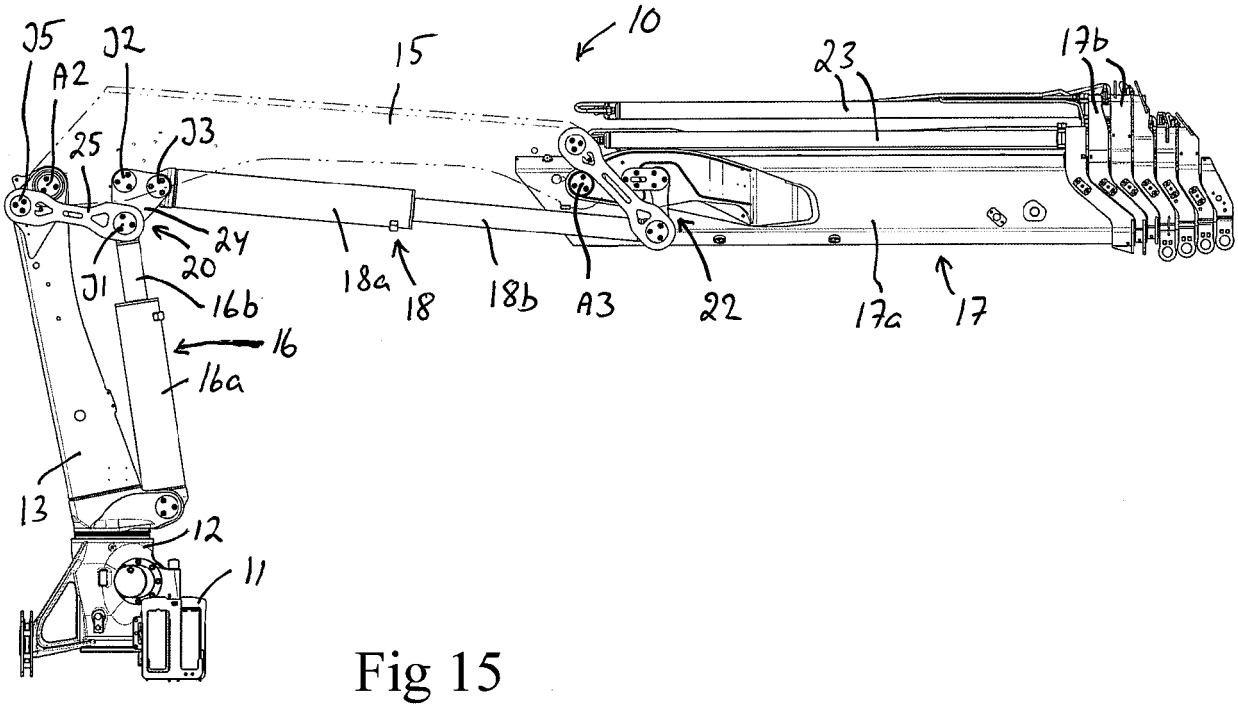
J5
J2
A2
15
10
23
17b
25
J3
24
20
J1
16b
18a
18
18b
A3
22
17a
17
16
16a
13
12
11

Fig 15

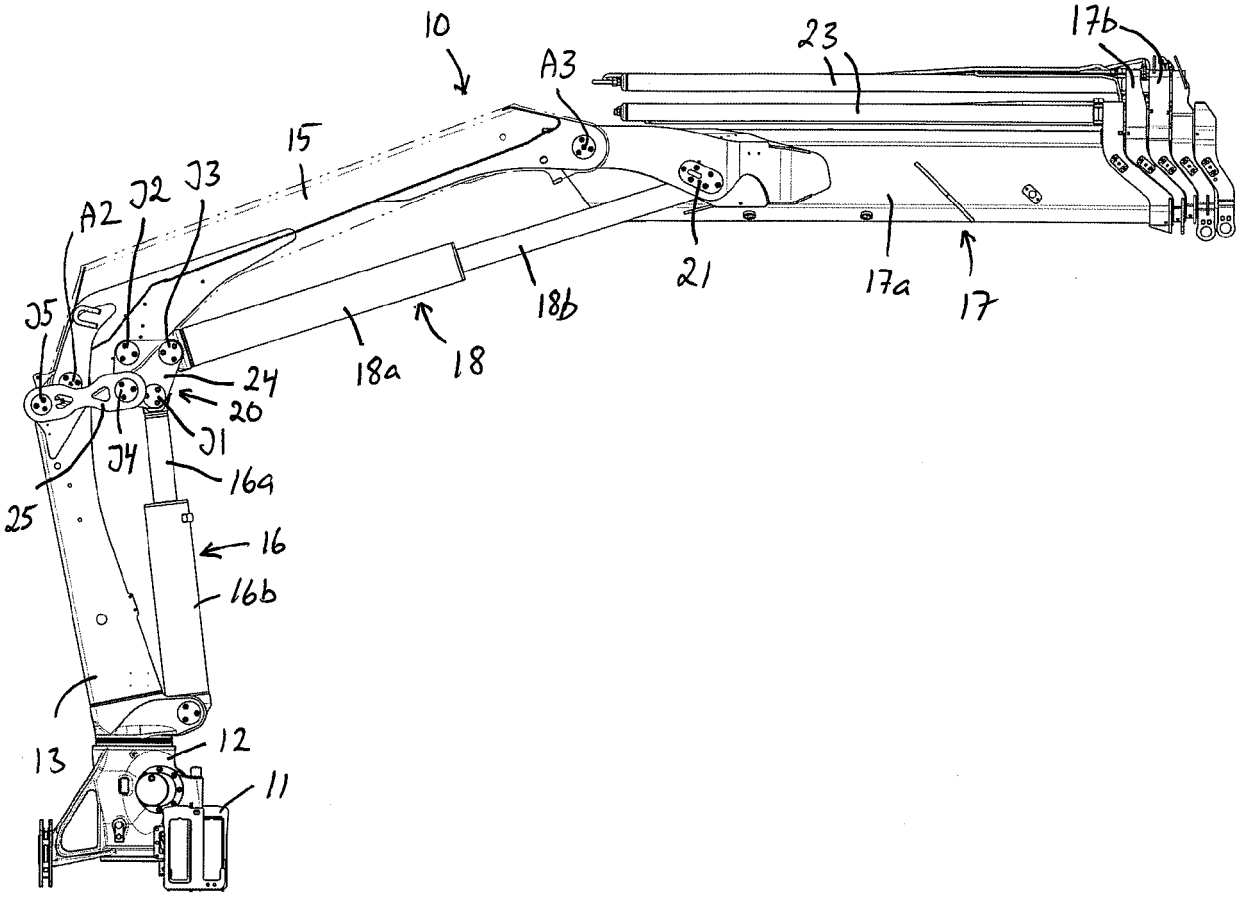
10
A3
23
17b
15
A2
J2
J3
J5
21
17a
17
18b
18a
18
24
20
J1
J4
16a
25
16
16b
13
12
11

Fig 16

Europäisches Patentamt
European Patent Office
Office européen des brevets

EUROPEAN SEARCH REPORT

Application Number
EP 16 20 4799

DOCUMENTS CONSIDERED TO BE RELEVANT

Category	Citation of document with indication, where appropriate, of relevant passages	Relevant to claim	CLASSIFICATION OF THE APPLICATION (IPC)
A,D	EP 1 580 159 A1 (HIAB AB [SE]) 28 September 2005 (2005-09-28) * the whole document * -----	1	INV. B66C23/68
A	FR 2 261 969 A1 (FISKARS AB OY [FI]) 19 September 1975 (1975-09-19) * figure 1 * -----	1	
A	EP 0 360 071 A1 (GUIDETTI LUIGI) 28 March 1990 (1990-03-28) * abstract * * figures * -----	1	

TECHNICAL FIELDS SEARCHED (IPC)

B66C
B60P

The present search report has been drawn up for all claims

Place of search	Date of completion of the search	Examiner
The Hague	12 June 2017	Sheppard, Bruce

CATEGORY OF CITED DOCUMENTS

X : particularly relevant if taken alone
Y : particularly relevant if combined with another document of the same category
A : technological background
O : non-written disclosure
P : intermediate document

T : theory or principle underlying the invention
E : earlier patent document, but published on, or after the filing date
D : document cited in the application
L : document cited for other reasons
.....
& : member of the same patent family, corresponding document

1

EPO FORM 1503 03.82 (P04C01)

ANNEX TO THE EUROPEAN SEARCH REPORT ON EUROPEAN PATENT APPLICATION NO. EP 16 20 4799

This annex lists the patent family members relating to the patent documents cited in the above-mentioned European search report.
The members are as contained in the European Patent Office EDP file on
The European Patent Office is in no way liable for these particulars which are merely given for the purpose of information.

12-06-2017

Patent document cited in search report	Publication date	Patent family member(s)	Publication date
EP 1580159 A1	28-09-2005	AT 340146 T	15-10-2006
		DE 602004002453 T2	19-04-2007
		EP 1580159 A1	28-09-2005
FR 2261969 A1	19-09-1975	DE 2505521 A1	28-08-1975
		FR 2261969 A1	19-09-1975
EP 0360071 A1	28-03-1990	EP 0360071 A1	28-03-1990
		IT 1225186 B	02-11-1990

EPO FORM P0459

For more details about this annex : see Official Journal of the European Patent Office, No. 12/82

REFERENCES CITED IN THE DESCRIPTION

This list of references cited by the applicant is for the reader's convenience only. It does not form part of the European patent document. Even though great care has been taken in compiling the references, errors or omissions cannot be excluded and the EPO disclaims all liability in this regard.

Patent documents cited in the description

- EP 1580159 A1 **[0006]**