(19) Europäisches Patentamt
European Patent Office
Office européen des brevets

(11) EP 3 421 318 A1

(12) EUROPEAN PATENT APPLICATION

(43) Date of publication:
02.01.2019 Bulletin 2019/01

(51) Int Cl.:
B61D 17/10 *(2006.01)*

(21) Application number: **18180975.7**

(22) Date of filing: **12.09.2013**

(84) Designated Contracting States:
AL AT BE BG CH CY CZ DE DK EE ES FI FR GB GR HR HU IE IS IT LI LT LU LV MC MK MT NL NO PL PT RO RS SE SI SK SM TR

(62) Document number(s) of the earlier application(s) in accordance with Art. 76 EPC:
13893466.6 / 3 045 371

(71) Applicant: **Hitachi, Ltd.**
Chiyoda-ku
Tokyo 100-8280 (JP)

(72) Inventors:
- **YOSHIZAWA, Takashi**
  Chiyoda-ku, Tokyo 100-8280 (JP)
- **MIYAMOTO, Toshiharu**
  Chiyoda-ku, Tokyo 100-8280 (JP)
- **MOCHIDA, Toshihiko**
  Chiyoda-ku, Tokyo 100-8280 (JP)
- **YAMAMOTO, Takahisa**
  Chiyoda-ku, Tokyo 100-8280 (JP)
- **OHBA, Hideshi**
  Chiyoda-ku, Tokyo 100-8280 (JP)

(74) Representative: **Gill, Stephen Charles**
Mewburn Ellis LLP
City Tower
40 Basinghall Street
London EC2V 5DE (GB)

Remarks:
This application was filed on 29.06.2018 as a divisional application to the application mentioned under INID code 62.

(54) RAILWAY VEHICLE

(57) [P roblem]

A railway vehicle whose upper floor can be effectively prevented from floating upward when a large impact acts on the railway vehicle, without obstructing elastic support of the upper floor, is to be provided.

[Solution]

A railway vehicle in which an upper floor forming a floor is laid down on a top surface side of an underframe includes: a protruding part provided along a longitudinal direction of the underframe, on the top surface of the underframe; an elastic member arranged along the longitudinal direction of the underframe and having a bottom surface fixed to the top surface of the underframe or a top surface of a horizontal piece of the protruding part; and a support member fixed to a top surface of the elastic member and fixed to a bottom surface of the upper floor; wherein the protruding part and the support member are formed in such a way that the protruding part locks movement of the support member into a direction away from the top surface of the underframe.

FIG.6

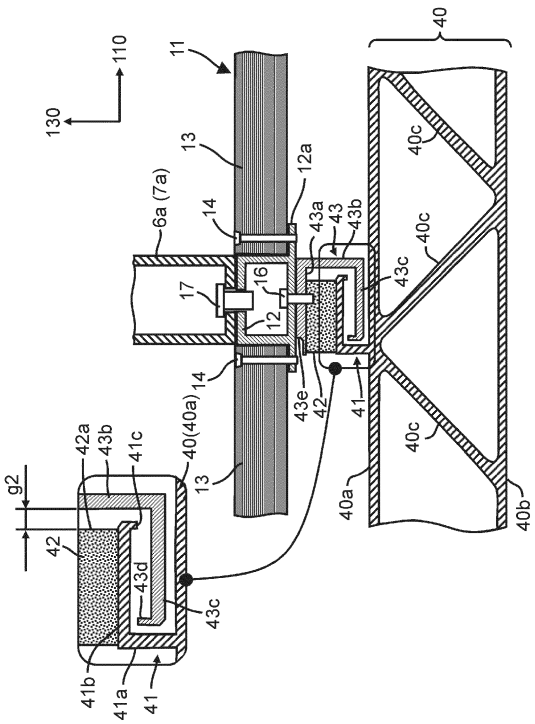

Printed by Jouve, 75001 PARIS (FR)

Description

Technical Field

[0001] The preset invention relates to a railway vehicle and particularly relates to a railway vehicle having a floor structure that restrain separation of an upper floor from an underframe when the railway vehicle collides or the like.

Background Art

[0002] A background art in this technical field is PTL 1, for example. This publication describes that "a plurality of floor supports is fixed on a top surface of an underframe made up of a hollow extruded material having a closed cross section, and a floor board is supported via an elastic member provided with the floor supports."

[0003] Also, PTL 2 describes that "a locking step part is formed on both side surfaces of a vibration-proof member which supports an interior floor board, and a housing groove opening on the top side is formed in a floor bearing member provided on a structure floor board. On the inner surface of one sidewall of the housing groove, a protruding part which engages with the top surface of the locking step part on one side surface of the vibration-proof member is provided and a support part extending outward in the horizontal direction, continuing from the top part of the other sidewall of the housing groove, is provided. A holding plate having a protruding part which engages with the top surface of the locking step part on the other side surface of the vibration-proof member is attached to the support part."

[0004] Also, PTL 3 describes that "the mounting has a first C-shaped profiled part (1), with inward facing projections (5), and a second profiled part (2) with upper and low, both parts of plastic or aluminum. Elastic bearing supporting it on the first profile when not under load, or under small load only. The elastic bearing part is glued to the second profile, and another bearing part (12) is glued to the first profile."

Citation List

Patent Literature

[0005]

PTL 1: JP-A-9-150738
PTL 2: JP-A-2001-48017
PTL 3: Specification of European Patent Application Publication No.1,193,165

Summary of Invention

Technical Problem

[0006] According to the related-art techniques, since the direction of a load acting on the vibration-proof rubber due to the weight of the seats fixed to the top surface of the upper floor, and the upper floor, is basically downward in the vertical direction, it is assumed that only a load in the direction of compression acts on the vibration-proof. However, if the railway vehicle collides with an obstacle at a railway crossing or another railway vehicle, a force in the direction of travel of the railway vehicle is applied to the centers of gravity of the seats fixed to the upper floor. At the same time, a moment formed by the above force acting on the centers of gravity of the seats, the height dimension from the centers of gravity to the upper floor, and the arm dimension, acts on the seat. Then, this moment causes an impact load which acts to tear off the upper floor from the underframe of the railway vehicle.

[0007] Conventionally, if the impact load as described above, which is not considered for the vibration-proof rubber, acts, the bonding surface between the top surface of the vibration-proof rubber and the upper floor, the vibration-proof rubber itself, or the bonding surface between the bottom surface of the vibration-proof rubber and a vibration-proof bearing provided on the underframe breaks, posing the risk of the upper floor being torn off upward and floating up.

[0008] Therefore, it is desired that, in a railway vehicle with its upper floor supported in a vibration-proof manner, an elastic support structure for the upper floor which stops the upper floor with seats, tables and the like fixed thereto from floating up, without obstructing elastic support of the upper floor by an ordinary elastic member such as a vibration-proof rubber when a large impact acts on the railway vehicle, should be achieved.

[0009] In view of the foregoing circumstances, the invention is to propose a railway vehicle whose upper floor can be effectively prevented from floating upward when a large impact acts on the railway vehicle, without obstructing elastic support of the upper floor.

Solution to Problem

[0010] To solve the foregoing problems, according to the invention, a railway vehicle in which an upper floor forming a floor is laid down on a top surface side of an underframe includes: a protruding part provided along a longitudinal direction of the underframe, on the top surface of the underframe; an elastic member arranged along the longitudinal direction of the underframe, and having a bottom surface fixed to the top surface of the underframe or a top surface of a horizontal piece of the protruding part; and a support member fixed to a top surface of the elastic member and fixed to a bottom surface of the upper floor. The protruding part and the support member are formed in such a way that the protruding part locks movement of the support member into a direction away from the top surface of the underframe.

[0011] According to this railway vehicle, even if a load in the direction of lifting (tearing off) the upper floor acts on the upper floor as an impact of collision or the like

occurs, the protruding part locks the movement of the support member and therefore the upward and downward movement of the upper floor is restrained as well. In this case, the protruding part and the support member do not affect the elastic support of the upper floor by the elastic member.

Advantageous Effect of Invention

[0012] According to the invention, a railway vehicle whose upper floor can be effectively prevented from floating upward when a large impact acts on the railway vehicle, without obstructing elastic support of the upper floor, can be achieved.

Brief Description of Drawings

[0013]

[FIG. 1] FIG. 1 is a vertical cross-sectional view in the longitudinal direction of a railway vehicle.
[FIG. 2] FIG. 2 is a cross-sectional view showing a vibration-proof support structure according to a first embodiment.
[FIG. 3] FIG. 3 is a cross-sectional view showing another configuration example of the vibration-proof support structure according to the first embodiment.
[FIG. 4] FIG. 4 is a cross-sectional view showing the cross-sectional configuration in a direction along the longitudinal direction of a railway vehicle having the vibration-proof support structure according to the first embodiment.
[FIG. 5] FIG. 5 is a cross-sectional view showing another configuration example of the vibration-proof support structure according to the first embodiment.
[FIG. 6] FIG. 6 is a cross-sectional view showing a vibration-proof support structure according to a second embodiment.
[FIG. 7] FIG. 7 is a cross-sectional view showing a configuration example of an upper floor support structure according to the second embodiment.
[FIG. 8] FIG. 8 is a cross-sectional view showing a configuration example of the vibration-proof support structure according to the second embodiment.
[FIG. 9] FIG. 9 is a cross-sectional view showing a configuration example of the upper floor support structure according to the second embodiment.
[FIG. 10] FIG. 10 is a perspective view showing an application example of the vibration-proof support structure according to the second embodiment.

Description of Embodiments

[0014] Hereinafter, an embodiment of the invention will be described with reference to the drawings.

(1) First Embodiment

[0015] FIG. 1 is a vertical cross-sectional view in the longitudinal direction of a railway vehicle according to the first embodiment. FIG. 2 is a detailed view in which the part A in FIG. 1 is enlarged.

[0016] Typically, a railway vehicle structure 1 is made up of an underframe 2 forming a floor, side structures 3 provided upright at the ends in the width direction of the underframe 2, end structures 4 provided upright at the ends in the longitudinal direction of the underframe 2 (see FIG. 4), and a roof structure 5 placed on top of the side structures 3 and the end structures 4.

[0017] Particularly, each of the underframe 2, the side structures 3 and the roof structure 5 is made up of a member formed by coupling two face plates facing each other into one body with ribs. These members are manufactured by extruding an aluminum alloy and are called double-skin members. These double-skin members used for the railway vehicle structure 1 are often extruded along the longitudinal direction of the railway vehicle.

[0018] On the top surface of the underframe 2 inside the railway vehicle structure 1, an upper floor 11 is laid down via a vibration-proof rubber 10 (FIG. 2), and seats 6 and tables 7 or the like are fixed to the upper floor 11.

[0019] As shown in FIG. 2, the upper floor 11 is made up of a fixture rail 12 used when fixing the seats 6 and the tables 7 or the like to the upper floor 11, and a floor member 13 connected to the fixture rail 12 and thus forming the floor. The fixture rail 12 is a channel member with a C-cross section opening upward. The floor member 13 is fastened with screws 14 to edge parts 12a protruding in the width direction (sleeper direction) indicated by an arrow 120, from side bottom end parts of the fixture rail 12. The floor member 13 is formed of, for example, a wood member or aluminum honeycomb member as a core member, with thin face plates of an aluminum alloy or the like bonded to both sides of the core member. The fixture rail 12 is produced by extrusion of an aluminum alloy, similarly to the underframe 2.

[0020] The upper floor 11 is carried into the railway vehicle structure 1 and positioned at a predetermined position, and subsequently placed on a support member 15 fixed to the top surface of the vibration-proof rubber 10 fixed in advance at a predetermined position on the top surface of the underframe 2. Then, both end parts in the width direction (sleeper direction) of the upper floor 11 are screwed to support parts, not shown, provided on bottom end parts of the side structures 3, and the fixture rail 12 situated at a center part in the width direction of the upper floor 11 is fastened to the support member 15 on the vibration-proof rubber 10 with screws 16.

[0021] Subsequently, bottom end parts of legs 6a of the seats 6 and legs 7a of the tables 7 are fixed with bolts 17 to a top part of the fixture rail 12 forming the upper floor 11. In the space between the underframe 2 and the upper floor 11, a predetermined plate-like member 18 such as a sound absorbing member or heat insulation

member is arranged according to need. Also, as a support structure in which the bottom end parts of the side structures 3 support both end parts in the width direction of the upper floor 11, a vibration-proof support structure according to this embodiment made up of a protruding part 20 on the underframe 2, described later, the support member 15 and the vibration-proof rubber 10 may be employed.

[0022] Next, the attachment structure of the upper floor 11 to the underframe 2 is described. In the case of this embodiment, on the side of the top surface of the underframe 2 (the surface of a face plate 2a on the inside of the vehicle, of face plates 2a, 2b of the underframe 2), a protruding part 20 with an inverted L-shaped cross section is integrally extruded with the underframe 2, along the longitudinal direction (rail direction) of the underframe 2 indicated by an arrow 110 in FIG. 4 (see FIG. 4). The protruding part 20 includes a vertical piece 20a extending in a vertical direction from the face plate 2a, a horizontal piece 20b extending in a horizontal direction of a top end part of the vertical piece 20a, and a protrusion 20c protruding downward from a horizontal end part of the horizontal piece 20b (protruding toward a second horizontal piece 15c of the support member 15, described later). The vertical piece 20a is provided near the connecting part between the face plate 2a of the underframe 2 and a slant rib 2c.

[0023] On the top surface of the face plate 2a which is degreased, the vibration-proof rubber 10 is fixed with an adhesive along the longitudinal direction (rail direction) of the face plate 2a and subsequently the support member 15 is fixed to the top part of the vibration-proof rubber 10 with an adhesive. This support member 15 includes a first horizontal piece 15a, a vertical piece 15b extending downward from one end part in the width direction of the first horizontal piece 15a, a second horizontal piece 15c extending in a horizontal direction from a bottom end part of the vertical piece 15b, and a protrusion 15d protruding upward from a horizontal end part of the second horizontal piece 15c (protruding toward the horizontal piece 20b of the protruding part 20).

[0024] The support member 15 has the second horizontal piece 15c inserted between the horizontal piece 20b of the protruding part 20 of the underframe 2 and the top face plate 2a of the underframe 2 and is bonded onto the vibration-proof rubber 10 in such a way that the second horizontal piece 15c and the horizontal piece 20b of the protruding part 20 spatially overlap in a direction perpendicular to the top surface of the underframe 2 (arrow 130).

[0025] In this case, a gap (space) is provided between the horizontal piece 20b of the protruding part 20 and the second horizontal piece 15c of the support member 15, between a horizontal end part of the horizontal piece 20b of the protruding part 20 and the vertical piece 15b of the support member 15, between a horizontal end part of the second horizontal piece 15c of the support member 15 and the vertical piece 20a of the protruding part 20, between the protrusion 20c of the protruding part 20 and the protrusion 15d of the support member 15, between the protrusion 20c of the protruding part 20 and the second horizontal piece 15c of the support member 15, and between the protrusion 15d of the support member 15 and the horizontal piece 20b of the protruding part 20. Thus, a configuration which can elastically support the upper floor 11 without obstructing the deformation of the vibration-proof rubber 10 at the time of normal use of the railway vehicle is provided. When the railway vehicle is operated, even if a vertical load acts on the vibration-proof rubber 10 and causes compressive deformation or a horizontal load is applied to cause shear deformation, these gaps (spaces) are secured and therefore the upper floor 11 is elastically supported by the vibration-proof rubber 10.

[0026] The configuration of the protruding part 20 (vertical piece 20a, horizontal piece 20b, protrusion 20c) of the underframe 2 and the configuration of the support member 15 (first horizontal piece 15a, vertical piece 15b, second horizontal piece 15c, protrusion 17d) are arranged with plane symmetry about a vertical cross section in the center part of the railway vehicle structure 1 (cross section taken along B-B in FIG. 1).

[0027] A gap g1 (see FIG. 2) is provided between the vertical piece 15b of the support member 15 and a side surface 10a of the vibration-proof rubber 10, thus forming a configuration which does not prevent deformation of the vibration-proof rubber 10 elastically supporting the upper floor 11 when a load is applied thereto. Moreover, since the gap g1 is provided to the side surface 10a of the vibration-proof rubber 10, a configuration which can use a rubber with a small spring constant and a high vibration insulation effect (soft rubber with a low rubber hardness) as the vibration-proof rubber 10 is formed. A cut-out 15e is provided at an open end part in the width direction of the first horizontal piece 15a of the support member 15, thus achieving lighter weight of the support member 15.

[0028] Next, an example of a method for fixing the upper floor 11 to the top surface of the underframe 2 will be described. First, the floor member 13 is fixed to the edge parts 12a of the fixture rail 12 with the screws 14, thus producing the upper floor 11 made up of the fixture rail 12 and the floor member 13 formed as one body. The dimension in the width direction (sleeper direction) of the upper floor 11 is substantially the same as the dimension in the width direction (sleeper direction) of the inside of the railway vehicle structure 1. As the dimension in the longitudinal direction (rail direction) of the upper floor 11, a length that allows easy handling of the upper floor 11 carried into the vehicle (for example, approximately 2 [m]) is chosen.

[0029] Subsequently, the vibration-proof rubber 10 is fixed with an adhesive at a predetermined position on the top surface of the underframe 2 (surface of the face plate 2a), and then the first horizontal piece 15a of the support member 15 is fixed with an adhesive to the top

surface of the vibration-proof rubber 10 while the support member 15 is being positioned so as to satisfy the above positional relations between the vertical piece 20a, the horizontal piece 20b and the protrusion 20c of the protruding part 20, and the vertical piece 15b, the second horizontal piece 15c and the protrusion 15d of the support member 15.

[0030] After this, the upper floor 11 is positioned and placed on the top surface of the first horizontal piece 15a of the support member 15. Moreover, the screw 16 is inserted into the fixture rail 12 from the upward opening part of the fixture rail 12, and this screw 16 is screwed into the support member 15 via the fixture rail 12, thus fixing the fixture rail 12 to the support member 15. As this work is repeated, the upper floors 11 are connected in series to each other along their longitudinal direction, forming a continuous single-body floor with less visible joints. The form or the like of the joint parts of the upper floors 11 in order to connect the upper floors 11 in series to each other along the longitudinal direction (rail direction) of the railway vehicle structure 1 will be described later.

[0031] FIG. 3, in which the parts corresponding to those in FIG. 2 are denoted by the same reference signs, shows a configuration example in the case where the above vibration-proof support structure providing vibration-proof support of the upper floor 11 is employed in a railway vehicle in which the top surface of the underframe 2 and the bottom surface of the floor have smaller dimensions. This vibration-proof support structure has a structure similar to the vibration-proof support structure according to this embodiment described above with reference to FIG. 2, except that the thickness of a vibration-proof rubber 21 is smaller and that the height dimension of a vertical piece 22b of a support member 22 is shorter. In FIG. 3, 22a denotes a first horizontal piece of the support member 22, 22c denotes a second horizontal piece of the support member 22, and 22d denotes a protrusion of the support member 22.

[0032] Here, a railway train set made up of a plurality of railway vehicles includes a railway vehicle having a truck equipped with a main motor, a railway vehicle which is not equipped with a main motor, and a railway vehicle equipped with a current collector on its roof in order to supply electric power from overhead lines to the railway vehicle, or the like.

[0033] In the railway vehicle having the truck equipped with the main motor, the vibration of the main motor installed on the truck and the vibration generated in a traction device which gives the railway vehicle structure 1 a tractive force and a braking force of the truck, or the like, tend to be transmitted to the underframe 2. Therefore, in the railway vehicle having the truck equipped with the main motor, it is desirable that vibration-proof capability should be enhanced by increasing the thickness (height dimension) of the vibration-proof rubber or by reducing its rubber hardness, so that the vibration of the underframe 2 will not be transmitted to the upper floor 11. Meanwhile, in the railway vehicle having the truck which is not equipped with a main motor, since the vibration levels of the foregoing vibrations transmitted to the underframe 2 are lower and high vibration-proof capability for the upper floor 11 is not required, there is no need to achieve a large thickness of the vibration-proof rubber.

[0034] Also, in the railway vehicle equipped with the current collector, since the height of the roof structure 5 is lowered, the height of a ceiling 8 (FIG. 1) is lowered as well. Therefore, in some cases, measures of reducing a height dimension H1 (FIG. 2) from the top surface of the underframe 2 (surface of the face plate 2a) to the bottom surface of the upper floor 11 and thus increasing the height dimension from the top surface of the upper floor 11 to the bottom surface of the ceiling 8 may be taken. In such cases, a height dimension H2 (FIG. 3) from the top surface of the underframe 2 to the bottom surface of the upper floor 11 can be reduced simply by reducing the height dimension of the vertical piece 22b of the support member 22 and the height dimension of the vibration-proof rubber 21, as shown in FIG. 3.

[0035] The railway vehicle in which the dimension from the top surface of the underframe 2 to the bottom surface of the upper floor 11 is smaller can be dealt with by employing the support member 22 in which the height dimension of the vertical piece 22b is smaller and by using the vibration-proof rubber 21 with a smaller thickness. Therefore, there is no need to change the dimension of the vertical piece 20a (horizontal piece 20b, protrusion 20c) or the like extruded integrally with the underframe 2, according to the height dimension from the top surface of the underframe 2 to the bottom surface of the upper floor 11. Thus, there is no increase in the types of the underframe 2 or no preparation of a plurality of dies (molds used for extrusion) for the extruded members forming the underframe 2, and increase in the manufacturing cost can be restrained.

[0036] FIG. 4 is a cross-sectional view in a direction along the longitudinal direction of the railway vehicle having the above vibration-proof support structure according to the embodiment (cross-sectional view taken along C-C in FIG. 2). The railway vehicle has vestibule sections D at the ends in the longitudinal direction (rail direction) and has a passenger cabin section P in the middle in its longitudinal direction. Generally, the vestibule section D is a space situated above a truck 30 and has doorways in the side structures 3 (FIG. 1) which passengers use for boarding and alighting. The vestibule section D and the passenger cabin section P are partitioned by a partition board 31, and the partition board 31 is provided with a door (not shown) communicating from the vestibule section D to the passenger cabin section P.

[0037] Under the floor of the railway vehicle, the truck 30 and underfloor equipment 32, 33 are provided. For example, the underfloor equipment 32 is a power pack having an internal combustion engine and a power generator. The underfloor equipment 33 is a control device which controls a brake provided on the truck 30. The

underfloor equipment 32 has a movable part and therefore is highly likely to apply vibration to the underframe 2. The underfloor equipment 33 has no movable part and therefore less likely to apply vibration to the underframe 2. If the truck 30 is equipped with a main motor, vibration due to the rotation of the main motor is transmitted to the underframe 2. Even if the truck 30 is not equipped with a main motor, vibration tends to be transmitted from the truck 30 to the underframe 2 because of joints of tracks 34 and misalignment of the tracks 34 or the like.

[0038] The upper floor 11 provided at a position P1 above the underfloor equipment 32 applying vibration to the underframe 2 is fixed to the top surface of the underframe 2 via the vibration-proof rubber 10 (vibration-proof support). The upper floor 11 provided at a position P2 above the underfloor equipment 33 not applying vibration to the underframe 2 is directly fixed to the horizontal piece 20b of the protruding part 20 provided on the underframe 2 without using the vibration-proof rubber 10 arranged on the top surface of the underframe 2 (no vibration-proof support, see FIG. 9).

[0039] The upper floors 11 are connected in series along the longitudinal direction (rail direction) of the railway vehicle structure 1 and arranged on the underframe 2. A male contact part 11b is provided at one end in the longitudinal direction (rail direction) of the upper floor 11, and a female contact part 11a is provided at the other end in the longitudinal direction of the upper floor 11. When placing and positioning the upper floor 11 on the top surface of the underframe 2, the upper floor 11 is laid down while the male contact parts 11b and the female contact parts 11a of the upper floors 11 arranged in series are placed opposite each other and meshed with each other.

[0040] In the case of this embodiment, as clear from FIG. 4, the vibration-proof rubber 10 is continuously arranged along the longitudinal direction (rail direction) of the underframe 2, whereas the protruding part 20 of the underframe 2 and the support member 15 are dispersedly arranged along the longitudinal direction of the underframe 2. This is a measure for achieving a lighter weight of the railway vehicle structure 1. To this end, redundant parts of protruding bodies (having the same cross-sectional shape as the protruding part 20) extruded integrally with the underframe 2 and continuously along the longitudinal direction (rail direction) of the underframe 2 are cut off with grinder or the like, thus forming the individual protruding parts 20. If the requirement of lighter weight is not strict, the protruding parts 20 need not be provided dispersedly and those protruding bodies may be directly used as the protruding parts 20.

[0041] In the railway vehicle according to the embodiment having the foregoing configuration, if the railway vehicle collides with an obstacle or the like at a railway crossing or the like, an inertial force in the direction of travel (rail direction) of the railway vehicle acts on the upper floor 11, the seats 6 and the tables 7 or the like and therefore a force in the direction of travel occurs in these components. However, since the support member 15 with the upper floor 11 mechanically fastened with the screw 16 is bonded to the top surface of the vibration-proof rubber 10, the movement of the upper floor 11 into the direction of travel is restrained by the shear force of the adhesive.

[0042] Similarly, since the legs 6a of the seats 6 and the legs 7a of the tables 7, on which the force in the direction of travel acts, are fixed to the fixture rail 12 forming the upper floor 11, the movement in the direction of travel, of the legs 6a and the legs 7a fastened to the upper floor 11, is restrained, similarly to the upper floor 11. However, the seat surfaces, backrests and the like of the seats 6 will move in the direction of travel of the railway vehicle. Therefore, a moment formed by the inertial force in the direction of travel acting on the centers of gravity of the seats 6 and the tables 7, the height dimension from these centers of gravity to the upper floor 11, and the arm length, acts on the fastening parts between the upper floor 11 and the legs 6a (legs 7a).

[0043] Even if a force to lift the upper floor 11 upward acts because of this moment, and the above bonding surface is torn off, the horizontal piece 20b of the protruding part 20 provided on the underframe 2 locks the second horizontal piece 15c of the support member 15 fixed to the upper floor 11 from moving in the direction away from the top surface of the underframe 2 and therefore the upper floor 11 can be restrained from floating up from the underframe 2.

[0044] Also, the impact acting on the railway vehicle is not necessarily limited only to the direction along the direction of travel. For example, cases where an automobile collides with the lateral side of the railway vehicle at a railway crossing or the like are conceivable. Even in such cases, since the configuration of the vertical piece 20a and the like of the protruding part 20 provided on the underframe 2 and the configuration of the vertical piece 15b and the like of the support member 15 are arranged with plane symmetry about the vertical cross section in the center part of the railway vehicle structure 1, even if the upper floor 11 receives repetitive forces in the direction intersecting with the direction of travel, the vertical piece 20a of the protruding part 20 of the underframe 2 locks the movement in the width direction (sleeper direction) of the vertical piece 15b of the support member 15, and even if the upper floor 11 is about to be lifted upward by a force in the horizontal direction, the horizontal piece 20b of the protruding part 20 of the underframe 2 locks the upward movement of the second horizontal piece 15c of the support member 15.

[0045] Moreover, since the protrusion 20c is provided on the protruding part 20 of the underframe 2 and similarly the protrusion 15d is provided on the support member 15 so that the protrusion 20c and the protrusion 15d engage with each other when the upper floor 11 is about to be lifted upward, the separation of the upper floor 11 from the underframe 2 can be effectively restrained. Therefore, even if an impact in a horizontal plane (impact in

the width direction or in a slant direction) acts on the railway vehicle, the separation of the upper floor 11 from the underframe 2 can be effectively restrained.

[0046] Also, these protrusion 20c and protrusion 15d contribute to enhance the strengths and rigidities of the horizontal piece 20b of the corresponding protruding part 20 and the second horizontal piece 15c of the support member 15 and can effectively prevent these horizontal pieces 20b, 15c frombeing damaged even if an impact acts on the upper floor 11.

[0047] Moreover, in the railway vehicle according to this embodiment, the second horizontal piece 15c of the support member 15 is inserted between the horizontal piece 20b of the protruding part 20 provided on the underframe 2 and the top face plate 2a of the underframe 2, and the support member 15 is fixed on top of the vibration-proof rubber 10 with a configuration in which the horizontal piece 20b of the protruding part 20 and the second horizontal piece 15c of the support member 15 spatially overlap with each other in the direction perpendicular to the top surface of the underframe 2 (arrow 130 in FIG. 2), as described above.

[0048] In this case, the gap (space) is provided between the horizontal piece 20b of the protruding part 20 and the second horizontal piece 15c of the support member 15, between the horizontal end part of the horizontal piece 20b of the protruding part 20 and the vertical piece 15b of the support member 15, between the horizontal end part of the second horizontal piece 15c of the support member 15 and the vertical piece 20a of the protruding part 20, between the protrusion 20c of the protruding part 20 and the protrusion 15d of the support member 15, between the protrusion 20c of the protruding part 20 and the second horizontal piece 15c of the support member 15, and between the protrusion 15d of the support member 15 and the horizontal piece 20b of the protruding part 20. With this configuration, the deformation of the vibration-proof rubber 10 due to the vibration of the railway vehicle is not obstructed and therefore a sufficient vibration-proof support (vibration insulation) effect can be achieved. Moreover, since the gaps between the horizontal piece 20b of the protruding part 20 and the second horizontal piece 15c of the support member 15 and the like are maintained as described above, the occurrence of noises caused by collisions between these members can be restrained as well.

[0049] In addition, in the railway vehicle according to this embodiment, since the protruding part 20 of the underframe 2 is provided with plane symmetry about the vertical cross section in the center part of the railway vehicle structure 1, the types of component members of the underframe 2 extruded integrally with the protruding part 20 can be reduced. That is, for example, the extruded member (double-skin member) in the right-hand-side half in the width direction (sleeper direction) of the underframe 2 is extruded from the front toward the back, and the extruded member (double-skin member) in the left-hand-side half is extruded from the back toward the front, and these are placed opposite each other in the width direction and joined together to form the underframe 2. With this configuration (structure with plane symmetry about the vertical cross section in the center part), the number of types of component members of the underframe 2 can be reduced and therefore design cost and manufacturing cost can be reduced.

[0050] Also, in the railway vehicle according to this embodiment, since the vertical piece 20a of the protruding part 20 of the underframe 2 is provided near the connecting part between the face plate 2a forming the top surface of the underframe 2 and the slant rib 2c connecting both face plates 2a, 2b, the strength and rigidity of the protruding part 20 can be enhanced. That is, when an impact occurs on the railway vehicle and the upper floor 11 is about to move upward, the second horizontal piece 15c of the support member 15 fixed to the upper floor 11 is locked by the horizontal piece 20b of the protruding part 20 provided on the underframe 2. At this time, a large force acts on the horizontal piece 20b, the vertical piece 20a supporting the horizontal piece 20b, and the face plate 2a to which the vertical piece 20a is connected. However, since the railway vehicle according to this embodiment has the above configuration, even if an impact force acts in the direction in which the vertical piece 20a of the protruding part 20 is pulled upward in the process of restraining the upward movement of the upper floor 11, the vertical piece 20a can sufficiently endure the impact.

[0051] Meanwhile, depending on the positional relations with the legs 6a of the seats 6 and the legs 7a of the tables 7, it may be difficult in some cases to provide the protruding part 20 near the connecting part between the face plate 2a and the slant rib 2c of the underframe 2. In such cases, a vertical rib 2d connecting the face plate 2a and the face plate 2b below the vertical piece 20a of the protruding part 20 may be provided so as to secure the strength and rigidity of the vertical piece 20a, as shown in FIG. 5.

[0052] Moreover, generally, in the high frequency range of 160 [Hz] and above, where in-vehicle noises pose problems, the upper floor 11 presents vibration in a local deformation mode which is partial, and the upper floor 11 shows behavior as an object with a plurality of degrees of freedom, having with a plurality of masses and a spring, instead of a single mass. With respect to this point, in the railway vehicle according to this embodiment, since the legs 6a of the seats 6 and the legs 7a of the tables 7 are fixed directly above the vibration-proof rubber 10, when the weight of the seats 6 and the weight of passengers seated there act on the vibration-proof rubber 10 via the fixture rail 12, the natural vibration frequency of a spring mass system using the vibration-proof rubber 10 as a spring and the upper floor 11 as a mass is smaller than in the case where the seats 6 are fixed to the upper floor 11 in areas other than directly above the vibration-proof rubber 10. Therefore, the frequency range where a vibration-proof effect can be expected is

enlarged toward lower frequencies and therefore a high vibration-proof effect can be achieved. This has the effect of further reducing in-vehicle noises.

[0053] Also, since the highly rigid fixture rail 12 tends to be a node of vibration and the upper floor 11 is supported by the vibration-proof rubber 10 at the position of the node, a structure in which the vibration of the underframe 2 is less likely to be propagated to the upper floor 11 is provided. Moreover, since the legs 6a of the seats 6 are fixed by the highly rigid fixture rail 12, durability against an upward impact load which acts to tear off the legs 6a of the seats 6 from the upper floor 11 at the time of impact is improved, compared with the case where the fixture rail 12 is not provided. Furthermore, since the support member 15 can be bonded and fixed to the top surface of the vibration-proof rubber 10 in advance and the upper floor 11 can be fixed there, the positioning of the support member 15 is easy and the ease of assembly is improved.

(2) Second Embodiment

[0054] FIG. 6, in which the parts corresponding to those in FIG. 2 are denoted by the same reference signs, shows the vibration-proof support structure of the upper floor 11 according to the second embodiment. In the case of this embodiment, on the side of the top surface of an underframe 40 (the side of a face plate 40a on the inside of the vehicle), a protruding part 41 with an inverted L-shaped cross section is integrally extruded with the underframe 40, along the longitudinal direction (rail direction) of the underframe 40.

[0055] The protruding part 41 includes a vertical piece 41a extending in a vertical direction from the face plate 40a, a horizontal piece 41b extending in a horizontal direction of a top end part of the vertical piece 41a, and a protrusion 41c protruding downward from a horizontal end part of the horizontal piece 41b (protruding toward a second horizontal piece 43c of a support member 43, described later), and is formed continuously or dispersedly along the longitudinal direction of the underframe 40. The horizontal piece 41b of the protruding part 41 is formed with a broader width in the width direction (sleeper direction) than the horizontal piece 20b of the protruding part 20 in the first embodiment (FIG. 2). Also, the vertical piece 41a is provided near the connecting part between the face plate 40a forming the top surface of the underframe 40 and a slant rib 40c connecting the face plate 40a and a face plate 40b.

[0056] On the top surface of the protruding part 41 which is degreased, a vibration-proof rubber 42 having substantially the same width as the horizontal piece 41b of the protruding part 41 and having the same length as the support member 43, described below, in the longitudinal direction (rail direction), is fixed with an adhesive, and the support member 43 is fixed to the top part of the vibration-proof rubber 42. This support member 43 has a substantially C-shaped cross section and includes a first horizontal piece 43a, a vertical piece 43b extending downward from one end part in the width direction of the first horizontal piece 43a, a second horizontal piece 43c extending in a horizontal direction from a bottom end part of the vertical piece 43b so as to face the first horizontal piece 43a, and a protrusion 43d protruding upward from a horizontal end part of the second horizontal piece 43c (protruding toward the horizontal piece 41b of the protruding part 41).

[0057] The support member 43 has the second horizontal piece 43c inserted between the horizontal piece 41b of the protruding part 41 and the top face plate 40a of the underframe 40, and the surface facing the second horizontal piece 43c, of the first horizontal piece 43a, is fixed with an adhesive to the top surface of the vibration-proof rubber 42 in such a way that the horizontal piece 41b of the protruding part 41 and the second horizontal piece 43c of the support member 43 spatially overlap in a direction perpendicular to the top surface of the underframe 40 (arrow 130).

[0058] In this case, a gap (space) is provided between the horizontal piece 41b of the protruding part 41 and the second horizontal piece 43c of the support member 43, between a horizontal end part of the horizontal piece 41b of the protruding part 41 and the vertical piece 43b of the support member 43, between the protrusion 41c of the protruding part 41 and the second horizontal piece 43c of the support member 43, between a horizontal end part of the second horizontal piece 43c of the support member 43 and the vertical piece 41a of the protruding part 41, and between the protrusion 43d of the support member 43 and the horizontal piece 41b of the protruding part 41. Thus, a configuration which can elastically support the upper floor 11 without obstructing the deformation of the vibration-proof rubber 42 at the time of normal use of the railway vehicle is provided. When the railway vehicle is operated, even if a vertical load acts on the vibration-proof rubber 42 and causes compressive deformation or a horizontal load is applied to cause shear deformation, these gaps (spaces) are secured and therefore the upper floor 11 is elastically supported by the vibration-proof rubber 42.

[0059] The configuration of the protruding part 41 (vertical piece 41a, horizontal piece 41b, protrusion 41c) of the underframe 40 and the configuration of the support member 43 (first horizontal piece 43a, vertical piece 43b, second horizontal piece 43c, protrusion 43d) are arranged with plane symmetry about a vertical cross section in the center part of the railway vehicle structure 1 (cross section taken along B-B in FIG. 1).

[0060] A gap g2 is also provided between the vertical piece 43b of the support member 43 and a side surface 42a of the vibration-proof rubber 42, thus forming a configuration which does not prevent deformation of the vibration-proof rubber 10 elastically supporting the upper floor 11 when a load acts thereon. Moreover, since the gap g2 is provided to the side surface 42a of the vibration-proof rubber 42, a configuration in which a rubber with a

small spring constant and a high vibration insulation effect (soft rubber with a low rubber hardness) can be selected as the vibration-proof rubber 42 is formed. A cutout 43e is provided at an open end part in the width direction of the first horizontal piece 43a of the support member 43, thus achieving lighter weight of the support member 43.

[0061] Next, an example of a method for fixing the upper floor 11 to the top surface of the underframe 40 will be described. First, the upper floor 11 made up of the fixture rail 12 and the floor member 13 formed as one body is produced by the technique described above in the first embodiment.

[0062] Subsequently, the vibration-proof rubber 42 is fixed with an adhesive onto the horizontal piece 41b of each protruding part 41 of the underframe 40, and then the surface facing the second horizontal piece 43c, of the first horizontal piece 43a of the support member 43, is fixed with an adhesive to the top surface of the vibration-proof rubber 42 while the support member 43 is being positioned so as to satisfy the above positional relations between the vertical piece 41a, the horizontal piece 41b and the protrusion 41c of the protruding part 41 of the underframe 40, and the first horizontal piece 43a, the vertical piece 43b, the second horizontal piece 43c and the protrusion 43d of the support member 43.

[0063] After this, the upper floor 11 is positioned and placed on the top surface of the first horizontal piece 43a of the support member 43. Moreover, the screw 16 is inserted into the fixture rail 12 from the upward opening part of the fixture rail 12, and this screw 16 is screwed into the support member 43 via the fixture rail 12, thus fixing the fixture rail 12 to the support member 43. As this work is repeated, the upper floors 11 are connected in series to each other along their longitudinal direction, forming a continuous single-body floor with less visible joints.

[0064] Also in this embodiment, as described in the first embodiment, against an impact load which causes the above adhesive to be torn off and causes the upper floor 11 to move upward when the railway vehicle collides, the second horizontal piece 43c of the support member 43 strikes the horizontal piece 41b of the protruding part 41, and the upward movement of the upper floor 11 is thus restrained. Thus, the effect of achieving both the effect similar to the first embodiment, that is, the vibration-proof capability of the upper floor 11, and safety at the time of collision, can be achieved. Also, in this embodiment, the gap is present between the horizontal piece 41b of the protruding part 41 and the second horizontal piece 43c of the support member 43, and a vibration-proof rubber similar to the vibration-proof rubber 42 may be provided in this gap as well.

[0065] Also, for sections where the need for the vibration proof property is low, such as the floors of general sections that are not above the truck, inside the railway vehicle structure 1, the vibration-proof support structure according to this embodiment described above with reference FIG. 6 and a rigid support structure as shown in FIG. 7 may be used together. This rigid support structure is formed by a protruding part 44 with a F-shaped cross section extruded integrally with the underframe 40 along the longitudinal direction of the underframe 40, on the top surface side of the underframe 40 (the side of the face plate 40a on the inner side of the vehicle) .

[0066] The protruding part 44 includes a vertical piece 44a extending in a vertical direction from the face plate 40a, a first horizontal piece 44b extending in a horizontal direction from a top end part of the vertical piece 44a, a second horizontal piece 44c extending in a horizontal direction from a middle stage position of the vertical piece 44a so as to face the first horizontal piece 44b, and a protrusion 44d protruding downward from the end of the second horizontal piece 44c. The vertical piece 44a is provided near the connecting part between the face plate 40a of the underframe 40 and the slant rib 40c connected aslant to the face plate 40a.

[0067] Also, in the protruding part 44, the height from the face plate 40a to the top surface of the first horizontal piece 44b is formed to be the same as the height to the top surface of the first horizontal piece 43a of the support member 43 in the vibration-proof support structure described above with reference to FIG. 6, and the height from the face plate 40a to the second horizontal piece 44c is formed to be the same as the height to the top surface of the horizontal piece 41b of the protruding part 41 in the vibration-proof support structure described above with reference to FIG. 6.

[0068] Then, the upper floor 11 is positioned and placed on the top surface of the first horizontal piece 44b of the protruding part 44 and is fixed to the protruding part 44 (and hence the underframe 40) by having the screw 16 inserted into the fixture rail 12 from the site opening upward of the fixture rail 12 and then screwing this screw 16 into the first horizontal piece 44b of the protruding part 44 via the fixture rail 12.

[0069] Therefore, for example, in FIG. 4, if the vibration-proof support structure described above with reference to FIG. 6 is provided at the position P1 above the underfloor equipment 32 made up of the power pack having the internal combustion engine and the power generator, and the rigid support structure described above with reference to FIG. 7 is provided at the position P2 above the underfloor equipment 33 made up of the control device, the rigid support structure and the vibration-proof support structure can be used together.

[0070] In this case, in providing the vibration-proof support structure, since the protruding part 41 (FIG. 6) of the vibration-proof support structure can be prepared by eliminating the part above the second horizontal piece 44c of the protruding part 44, there is no need to change the shape of the underframe 40 for different sites, and a common shape of the underframe 40 can be used regardless of whether the support mechanism of the upper floor 11 is the rigid support structure or the vibration-proof support structure.

[0071] Meanwhile, at sites where the thickness of the vibration-proof rubber 42 should be greater than in the vibration-proof support structure according to this embodiment described above with reference to FIG. 6 so as to enhance vibration-proof capability, it is possible to eliminate the entirety of the protruding part 44 (FIG. 7), screw the fixture rail 12 on top of a vibration-proof rubber 45 fixed to the underframe 40 by a method such as bonding, and thus fix the upper floor 11 to the underframe 40, as shown in FIG. 8. In this case, this part itself does not have the function of restraining the upward displacement of the upper floor 11 when the vehicle collides. However, since the upper floors 11 are fastened to each other in the longitudinal direction (rail direction) of the railway vehicle as described above with reference to FIG. 4, if upward displacement is restrained in the upper floors 11 in front of and behind one upper floor 11, this upper floor 11 will not be displaced upward alone.

[0072] Also, for example, in the railway vehicle equipped with the current collector on the roof, if the floor needs to be lowered as the height of the roof structure 5 (FIG. 1) is lowered, and if there is no need for vibration-proof support of the floor, the height of the upper floor 11 can be lowered by eliminating the part above the second horizontal piece 44c of the above protruding part 44 so as to form the protruding part 41 of FIG. 6 and then directly fixing the fixture rail 12 to the horizontal piece 41b of this protruding part 41 with the screw 16, as shown in FIG. 9. In this way, according to the invention, in response to different demands for vibration-proof capability and floor height, configurations with different floor heights for different railway vehicles can be easily achieved and a broad range of vehicles types can be dealt with.

[0073] In the railway vehicle, if the movement in the longitudinal direction (rail direction) of the upper floor 11 needs to be partially restrained rigidly, the protruding part 41 may be provided continuously along the longitudinal direction (rail direction) of the underframe 40, then an anchor hole 41ba may be provided in the horizontal piece 41b of the protruding part 41, and an anchor pin 46 may be inserted in the anchor hole 41ba, as shown in FIG. 10. In this case, the anchor pin 46 and the anchor hole 41ba do not contact each other, but the anchor pin 46 is fixed in a hole 12b provided in the fixture rail 12. Thus, in normal time, the anchor pin 46 and the anchor hole 41ba do not contact each other, whereas when the upper floor 11 is about to move in the longitudinal direction (rail direction) at the time of collision, the anchor pin 46 strikes the anchor hole 41ba, restraining the movement of the upper floor 11. The anchor pin 46 may also be used as the bolt 17 (FIG. 6) fixing the legs 6a of the seats 6.

(3) Other Embodiments

[0074] The above embodiments are examples and the configurations of the invention are not limited to these. For example, in the above first and second embodiments, the cases where the horizontal pieces 15a, 22a, 43a of the support members 15, 22, 43 are bonded to the top surfaces of the vibration-proof rubbers 10, 21, 42 are described. However, the invention is not limited to these. The horizontal pieces 15a, 22a, 43a of the support members 15, 22, 43 may be fixed to the bottom surface of the upper floor 11, and the positional relations between the protruding parts 20, 41 of the underframe 2, 40 and the support members 15, 22, 43 may be formed as described above. In the case where the support members 15, 22, 43 and the vibration-proof rubbers 10, 21, 42 are thus separated, the seats 6 may be directly fixed to the upper floor 11 without providing the fixture rail 12. Even in the case where the support members 15, 22, 42 and the vibration-proof rubbers 10, 21, 42 are separated and where the legs 6a of the seats 6 are not fixed above the vibration-proof rubbers 10, 21, 42, the vibration-proof capability and the movement restraining effect for the upper floor 11 similar to those in the above first and second embodiments can be achieved.

[0075] Also, in the above first and second embodiments, the cases where the vibration-proof rubbers 10, 21, 42, 45 are used as elastic members which elastically support the upper floor 11 are described. However, the invention is not limited to these, and elastic members other than rubber, such as a spring or hard sponge, for example, can be broadly used as such elastic members.

[0076] Moreover, in the above first and second embodiments, the cases where the protruding parts 15d, 20c, 22d, 41c, 43d, 44d are extruded integrally with the underframes 2, 40 are described. However, the invention is not limited to these. The protruding parts 15d, 20c, 22d, 41c, 43d, 44d may be formed separately from the underframes 2, 40 and the protruding parts 15d, 20c, 22d, 41c, 43d, 44d may be fixed to the underframes 2, 40 by screwing or welding, or the like. However, extruding the protruding parts 15d, 20c, 22d, 41c, 43d, 44d integrally with the underframes 2, 40 can increase the strength of the protruding parts 15d, 20c, 22d, 41c, 43d, 44d in the direction of tension (upward direction).

[0077] Furthermore, in the above first and second embodiments, the protruding parts 20, 41, 44 and the support members 15, 22, 43 are configured as described above with reference to FIG. 2, FIG. 3 or FIG. 6 are described. However, the invention is not limited to these. In short, as long as the movement in the direction away from the top surfaces of the underframes 20, 40 fixedto the upper floor 11 can be locked by the protruding parts, various configurations other than the configurations described above with reference to FIG. 2, FIG. 3 or FIG. 6 can be broadly applied as the configurations of these support members and protruding parts.

[0078] Also, while the case where the vertical rib 2d connecting the face plate 2a and the face plate 2b below the vertical piece 20a of the protruding part 20 is provided on the underframe 2 is described in the above first embodiment, the invention is not limited to this. Also in the underframe 40 according to the second embodiment, a vertical rib connecting the face plate 40a and the face

plate 40b below the vertical piece 41a of the protruding part 41 may be similarly provided according to need.

[0079] Moreover, while the case where the structure for restraining the movement in the longitudinal direction of the upper floor 11 described above with reference to FIG. 10 is applied only to the vibration-proof support structure according to the second embodiment is described in the above second embodiment, the invention is not limited to this and such a structure for restraining the movement in the longitudinal direction of the upper floor 11 may also be applied to the vibration-proof support structure according to the first embodiment.

Industrial Applicability

[0080] The invention can be broadly applied to railway vehicles having various configurations in which an upper floor forming the floor is laid down on the top surface side of an underframe.

Reference Signs List

[0081] 1 ... railway vehicle structure, 2, 40 ... underframe, 2a, 2b, 40a, 40b ... face plate, 2c, 40c ... slant rib, 2d ... vertical rib, 6 ... seat, 6a, 7a ... leg, 7 ... table, 10, 21, 42, 45 ... vibration-proof rubber, 11 ... upper floor, 12 ... fixture rail, 12a ... edge part, 12b ... hole, 13 ... floor member, 14, 16 ... screw, 15, 22, 43 ... support member, 15a, 15c, 20b, 22c, 41b, 44b, 44d ... horizontal piece, 15b, 20a, 22b, 41a, 43b, 44a ... vertical piece, 15d, 20c, 22d, 41c, 43d, 44d ... protrusion, 15e ... cut-out, 17, 46 ... bolt, 20, 41, 44 ... protruding part, 30 ... truck, 33 ... underfloor equipment, 110 ... longitudinal direction (rail direction), 120 ... width direction (sleeper direction), 130 ... height direction.

NUMBERED CLAUSES RELATING TO THE INVENTION

[0082]

[Clause 1] A railway vehicle in which an upper floor forming a floor is laid down on a top surface side of an underframe, the railway vehicle comprising:

a protruding part provided along a longitudinal direction of the underframe, on the top surface of the underframe;
an elastic member arranged along the longitudinal direction of the underframe and having a bottom surface fixed to the top surface of the underframe or a top surface of a horizontal piece of the protruding part; and
a support member fixed to a top surface of the elastic member and fixed to a bottom surface of the upper floor;
wherein the protruding part and the support member are formed in such a way that the protruding part locks movement of the support member into a direction away from the top surface of the underframe.

[Clause 2] The railway vehicle according to clause 1, wherein
the protruding part includes:

a vertical piece extending in a vertical direction from the top surface of the underframe; and
a protruding portion having a horizontal piece extending in a horizontal direction from a top end part of the vertical piece,
the support member includes:

a first horizontal piece fixed to the top surface of the elastic member and fixed to the bottom surface side of upper floor;
a vertical piece extending in the direction of the top surface of the underframe from one end part in a width direction of the first horizontal piece; and
a second horizontal piece extending in a horizontal direction from a bottom end part of the vertical piece, and the support member

has the second horizontal piece inserted between the top source of the underframe and the horizontal piece of the protruding part and is arranged in such a way that the horizontal piece of the protruding part and the second horizontal piece of the support member spatially overlap with each other in a direction perpendicular to the top surface of the underframe.

[Clause 3] The railway vehicle according to clause 2, wherein
a protrusion protruding toward the second horizontal piece of the support member is provided at a horizontal end part of the horizontal piece of the protruding part, and
a protrusion protruding toward the horizontal piece of the protruding part is provided at a horizontal end part of the second horizontal piece of the support member.

[Clause 4] The railway vehicle according to clause 1, wherein
a configuration of the protruding part and a configuration of the support member are arranged with plane symmetry about a vertical cross section of a center part in the width direction of the underframe.

[Clause 5] The railway vehicle according to clause 2, wherein
a gap is provided between the horizontal piece of the protruding part and the second horizontal piece of the support member, between a horizontal end part of the horizontal piece of the protruding part and

the vertical piece of the support member, and between a horizontal end part of the second horizontal piece of the support member and the vertical piece of the protruding part.

[Clause 6] The railway vehicle according to clause 1, wherein

the underframe

is formed by extrusion and has a structure in which two face plates facing each other are connected together with a rib, and

the protruding part

is provided near a connecting part between the face plate forming the top surface of the underframe and the rib.

[Clause 7] The railway vehicle according to clause 1, comprising

a seat arranged on the upper floor,

wherein a leg of the seat is fixed at a position directly above the elastic member, on the upper floor.

Claims

1. A railway vehicle in which an upper floor (11) forming a floor is laid down on a top surface side of an underframe (40), the railway vehicle comprising:

a first protruding part (41) provided along a longitudinal direction of the underframe, on the top surface of the underframe;

an elastic member (42) arranged along the longitudinal direction of the underframe and having a bottom surface fixed to a top surface of a horizontal piece of the first protruding part; and

a support member (43) fixed to a top surface of the elastic member and fixed to a bottom surface of the upper floor;

wherein the first protruding part, the elastic member and the support member form a first vibration-proof support structure in a respective section of the vehicle,

wherein the first protruding part and the support member are formed in such a way that the first protruding part limits movement of the support member in a direction away from the top surface of the underframe,

wherein the first protruding part includes:

a vertical piece (41a) extending in a vertical direction from the top surface of the underframe; and

a protruding portion having the horizontal piece (41b) extending in a horizontal direction from a top end part of the vertical piece,

wherein the support member includes:

a first horizontal piece (43a) fixed to the top surface of the elastic member and fixed to the bottom surface side of upper floor;

a vertical piece (43b) extending in the direction of the top surface of the underframe from one end part in a width direction of the first horizontal piece; and

a second horizontal piece (43c) extending in a horizontal direction from a bottom end part of the vertical piece,

wherein the support member:

has the second horizontal piece inserted between the top surface of the underframe and the horizontal piece of the first protruding part and is arranged in such a way that the horizontal piece of the first protruding part and the second horizontal piece of the support member spatially overlap with each other in a direction perpendicular to the top surface of the underframe, and

wherein the elastic member has substantially the same width as the horizontal piece of the first protruding part.

2. The railway vehicle according to claim 1, wherein

a protrusion (41c) protruding toward the second horizontal piece of the support member is provided at a horizontal end part of the horizontal piece of the first protruding part, and

a protrusion (43d) protruding toward the horizontal piece of the first protruding part is provided at a horizontal end part of the second horizontal piece of the support member.

3. The railway vehicle according to claim 1, wherein

a configuration of the first protruding part and a configuration of the support member are arranged with plane symmetry about a vertical cross section of a center part in the width direction of the underframe.

4. The railway vehicle according to claim 1, wherein

a gap is provided between the horizontal piece of the first protruding part and the second horizontal piece of the support member, between a horizontal end part of the horizontal piece of the first protruding part and the vertical piece of the support member, and between a horizontal end part of the second horizontal piece of the support member and the vertical piece of the first protruding part.

5. The railway vehicle according to claim 1, wherein

the underframe

is formed by extrusion and has a structure in which two face plates (40a, 40b) facing each other are connected together with a rib (40c), and

the first protruding part

is provided near a connecting part between the face

plate forming the top surface of the underframe and the rib.

6. The railway vehicle according to claim 5, wherein the rib is a slant rib.

7. The railway vehicle according to claim 1, comprising a seat (6) arranged on the upper floor,
wherein a leg (6a) of the seat is fixed at a position directly above the elastic member, on the upper floor.

8. The railway vehicle according to any one of the previous claims, wherein the railway vehicle further has a first rigid support structure in a respective section of the vehicle, the first rigid support structure being a second protruding part (44) provided along a longitudinal direction of the underframe, on the top surface of the underframe, the second protruding part including a vertical piece (44a) extending in a vertical direction from the top surface of the underframe, a first horizontal piece (44b) extending in a horizontal direction from a top end part of the vertical piece and being fixed to the bottom surface of the upper floor, and a second horizontal piece (44c) extending in a horizontal direction from a middle stage position of the vertical piece so as to face the first horizontal piece, and
wherein the height from the top surface of the underframe to the top surface of the first horizontal piece of the second protruding part is formed to be the same as the height to the top surface of the first horizontal piece of the support member of the first vibration-proof support structure, and the height from the top surface of the underframe to the second horizontal piece of the second protruding part is formed to be the same as the height to the top surface of the horizontal piece of the first protruding part.

9. The railway vehicle according to any one of the previous claims, wherein the railway vehicle further has a second vibration-proof support structure in a respective section of the vehicle, the second vibration-proof support structure being a vibration-proof rubber (45) which is bonded at a bottom side to the top surface of the underframe and is fixed at a top side to the bottom surface of the upper floor.

10. The railway vehicle according to any one of the previous claims, wherein the railway vehicle further has a second rigid support structure in a respective section of the vehicle in which the floor is lowered relative to the section of the vehicle having the first vibration-proof support structure, the second rigid support structure being a third protruding part (41) provided along a longitudinal direction of the underframe, on the top surface of the underframe, the third protruding part including a vertical piece extending in a vertical direction from the top surface of the underframe, and a horizontal piece (41c) extending in a horizontal direction from a top end part of the vertical piece and being fixed to the bottom surface of the upper floor, and
wherein the height from the top surface of the underframe to the top surface of the horizontal piece of the third protruding part is formed to be the same as the height from the top surface of the underframe to the top surface of the horizontal piece of the first protruding part.

11. The railway vehicle according to any one of the previous claims, wherein an anchor hole (41ba) is provided in the horizontal piece of the first protruding part, and an anchor pin (46) is fixed to a fixture rail (12) of the upper floor, the anchor pin inserting into the anchor hole without contacting the side thereof such that the anchor pin can strike the side anchor hole to restrain movement of the upper floor in the longitudinal direction relative to the underframe in the event of a collision.

FIG.1

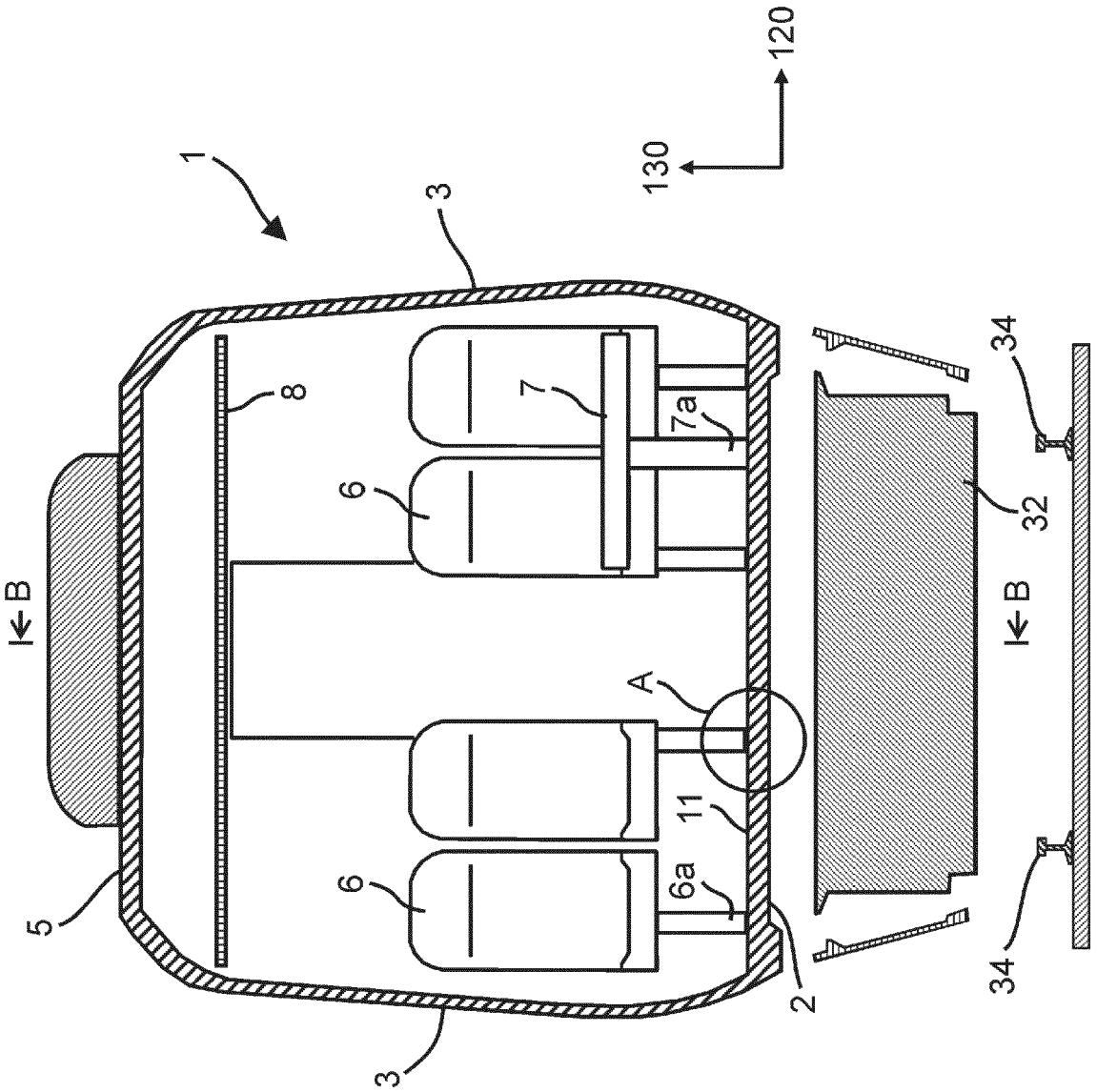

FIG.2

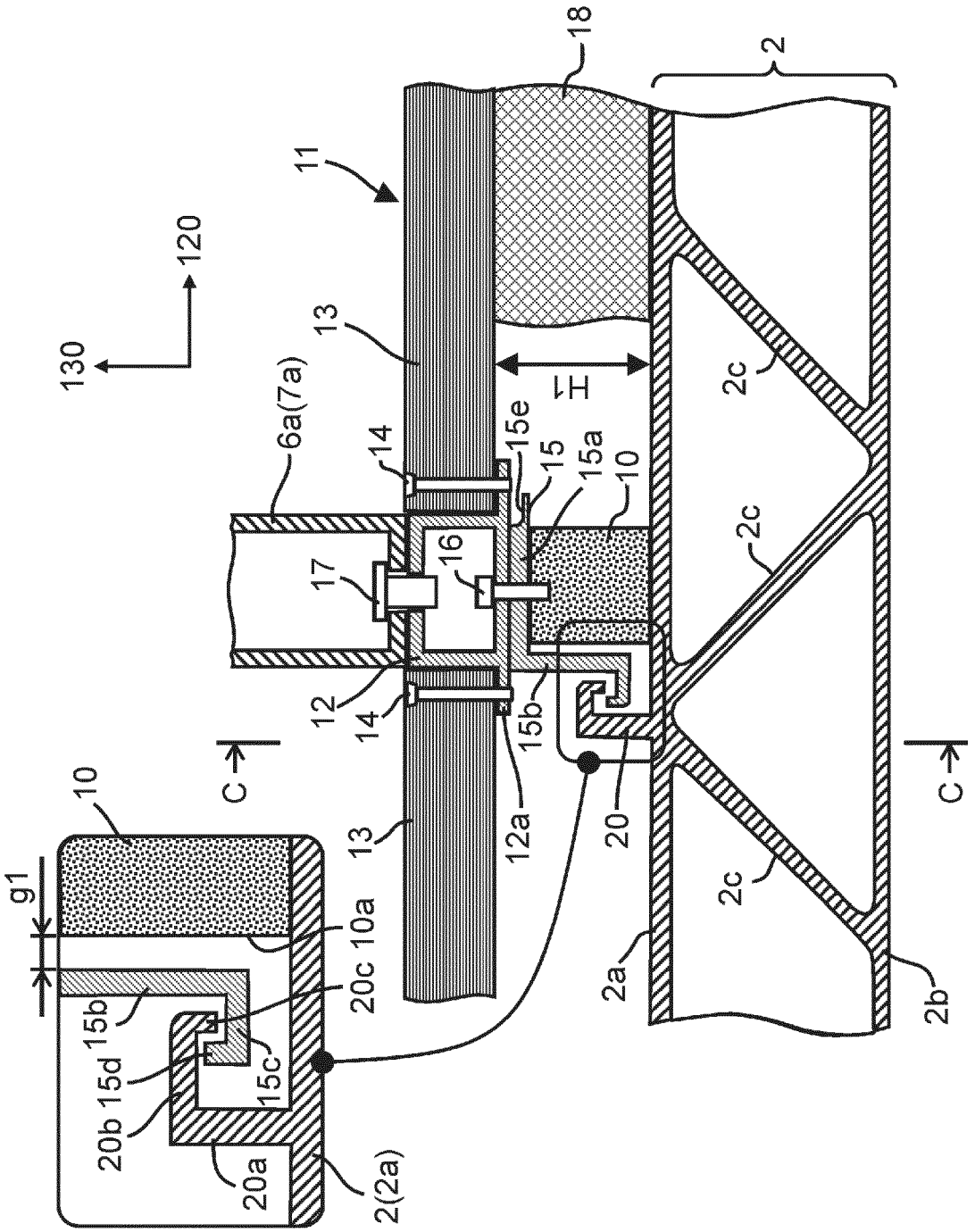
18
2
11
120
130
13
H1
2c
6a(7a)
14
15e
15
15a
10
2c
17
16
12
14
15b
C
C
10
13
12a
20
g1
10a
20c
2c
15b
15d
15c
2a
2b
20b
20a
2(2a)

FIG.3

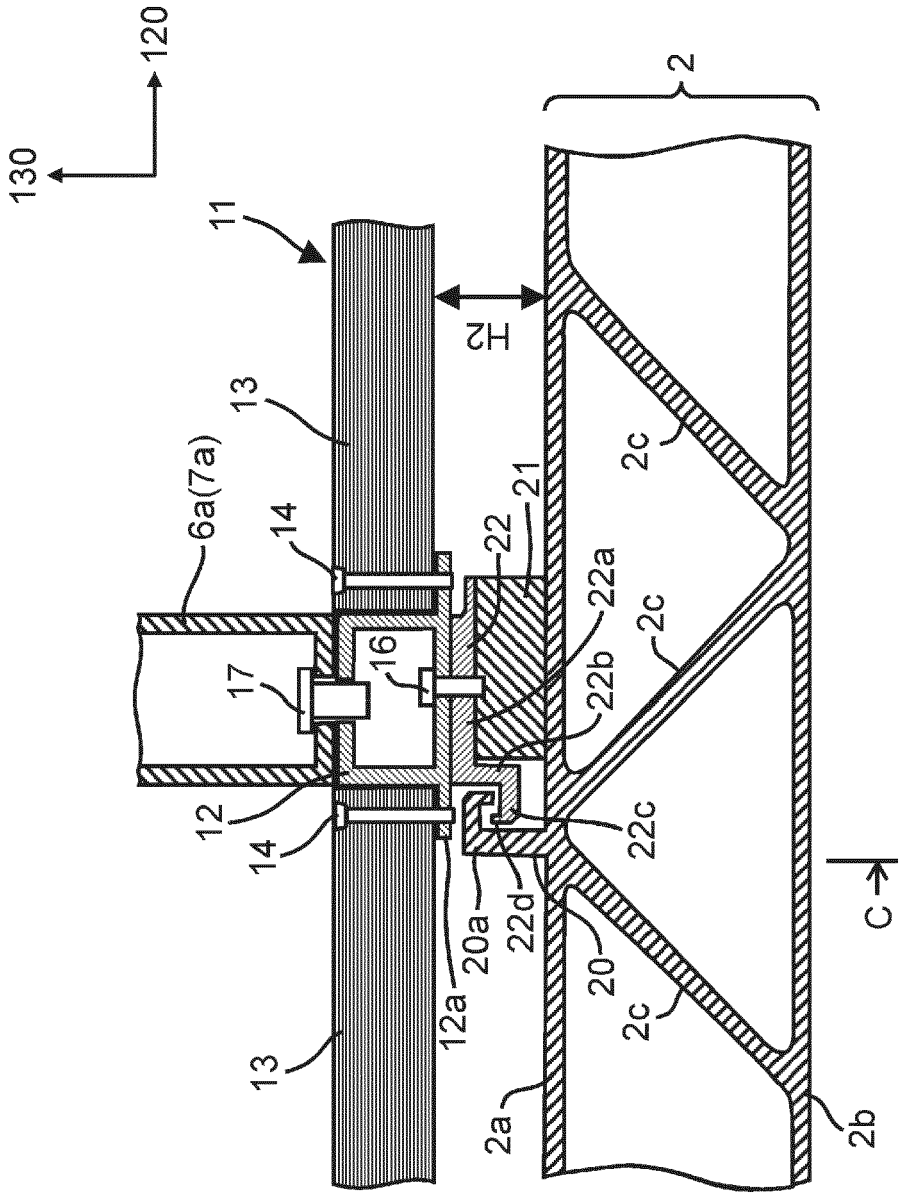
120
130
11
13
6a(7a)
14
17
16
12
14
13
12a
20a
22d
20
22c
22b
22a
22
21
2
H2
2c
2c
2c
2a
2b
C

FIG.4

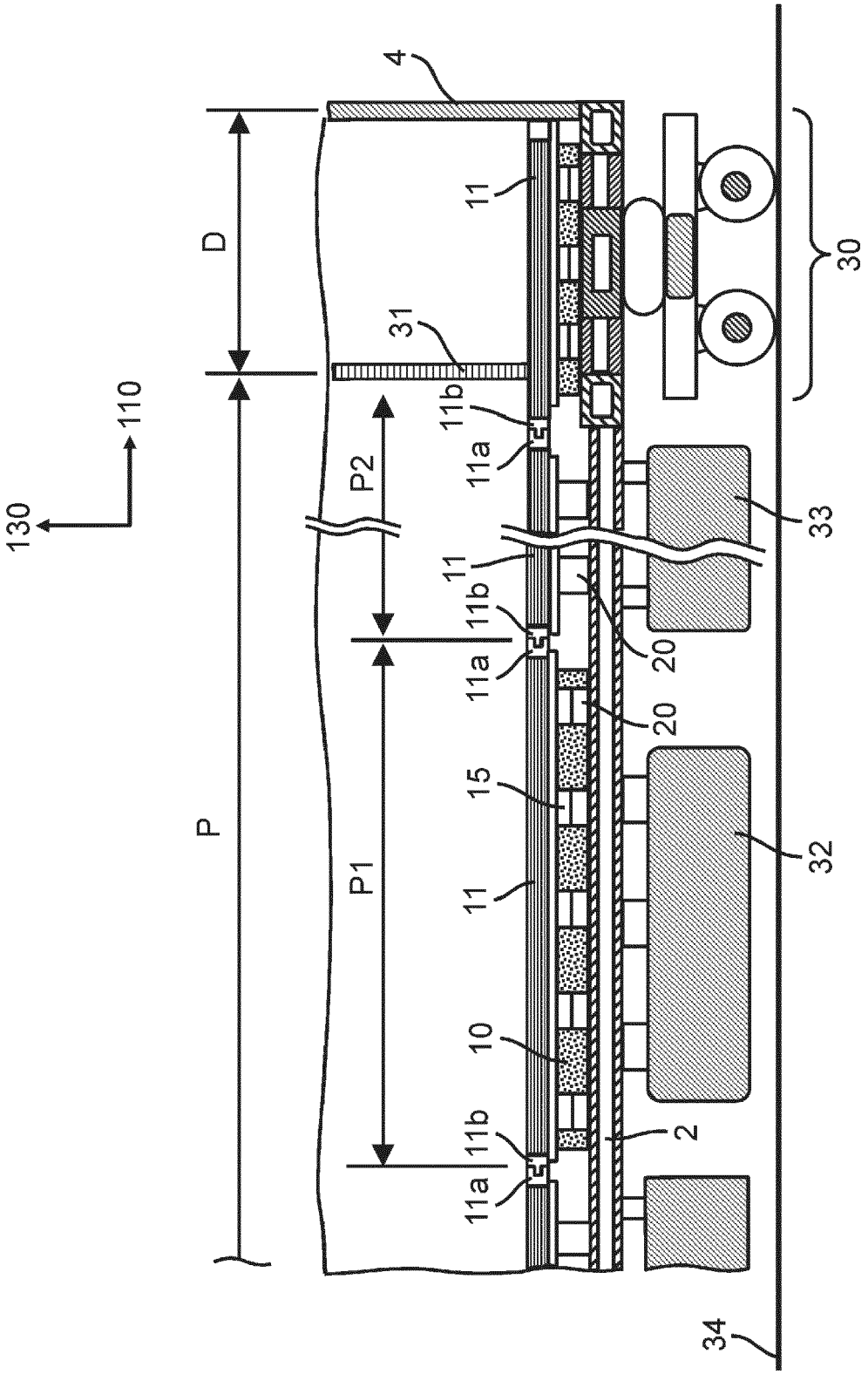

FIG.5

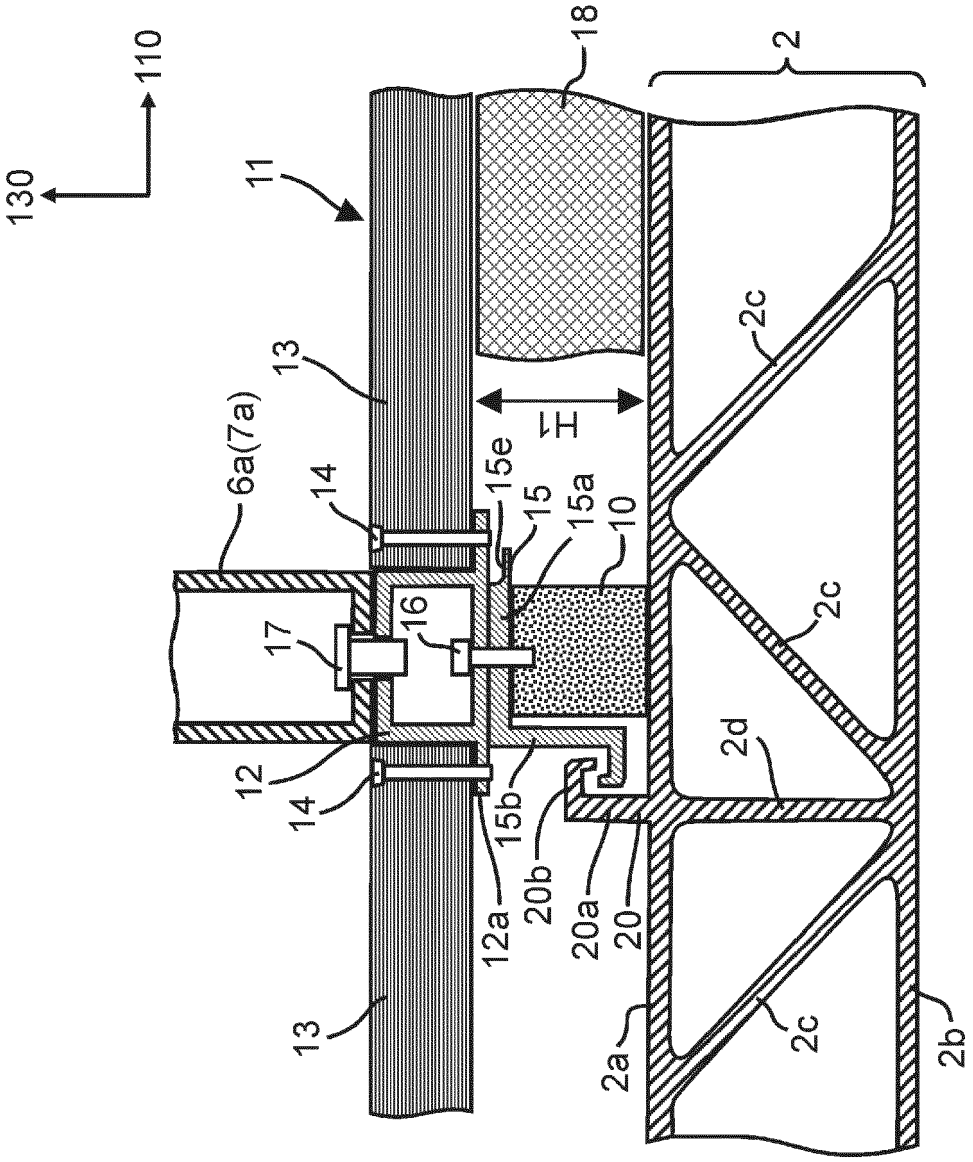
130
110
11
18
2
13
6a(7a)
14
15e
15
15a
10
H1
2c
17
16
2c
12
14
15b
2d
12a
20b
20a
20
13
2a
2c
2b

FIG.6

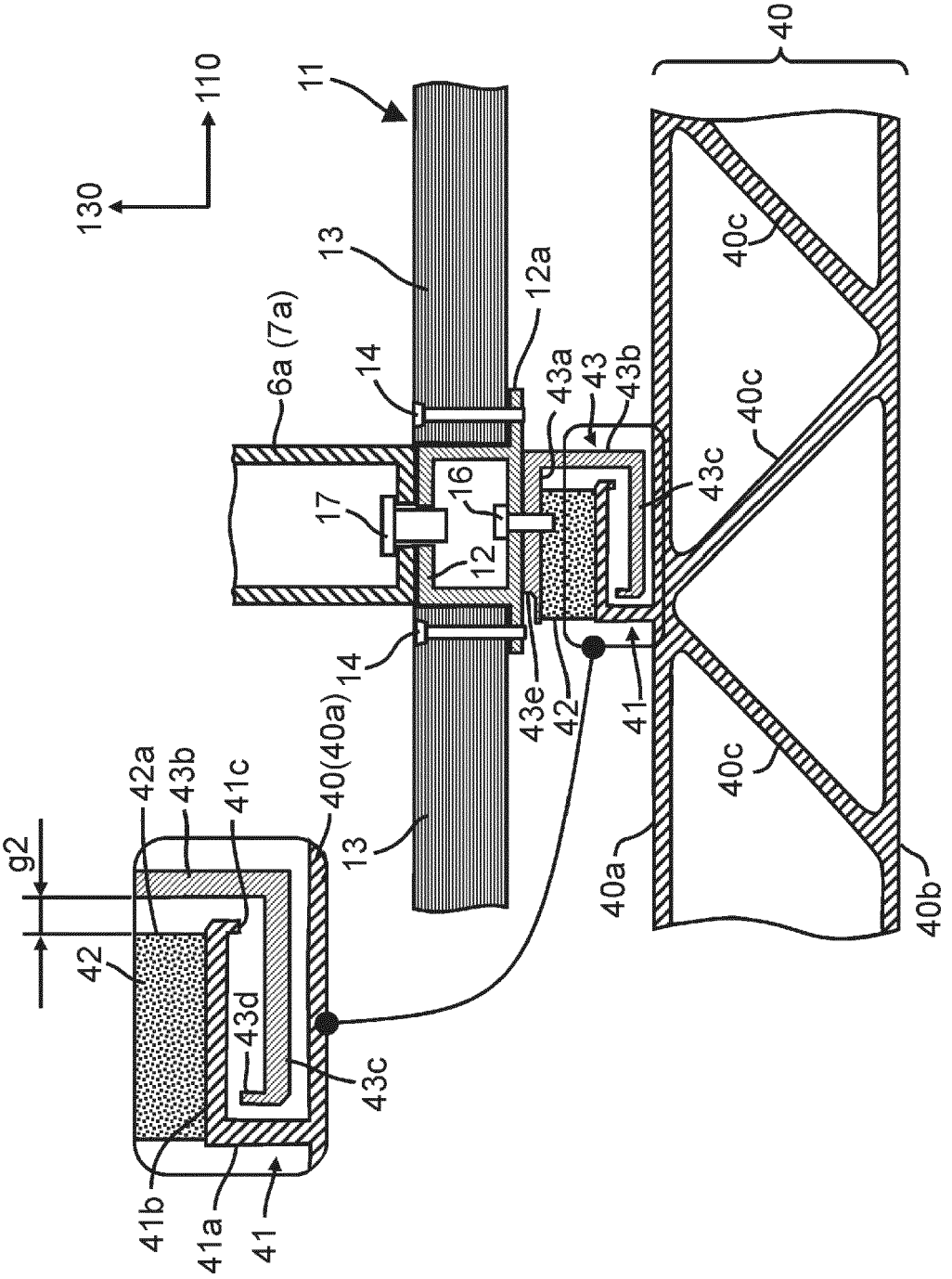
130
110
11
13
12a
6a (7a)
14
43a
43
43b
40
40c
40c
43c
16
17
12
14
43e
42
41
40(40a)
42a
43b
41c
g2
42
43d
43c
41b
41a
41
13
40a
40c
40b

FIG.7

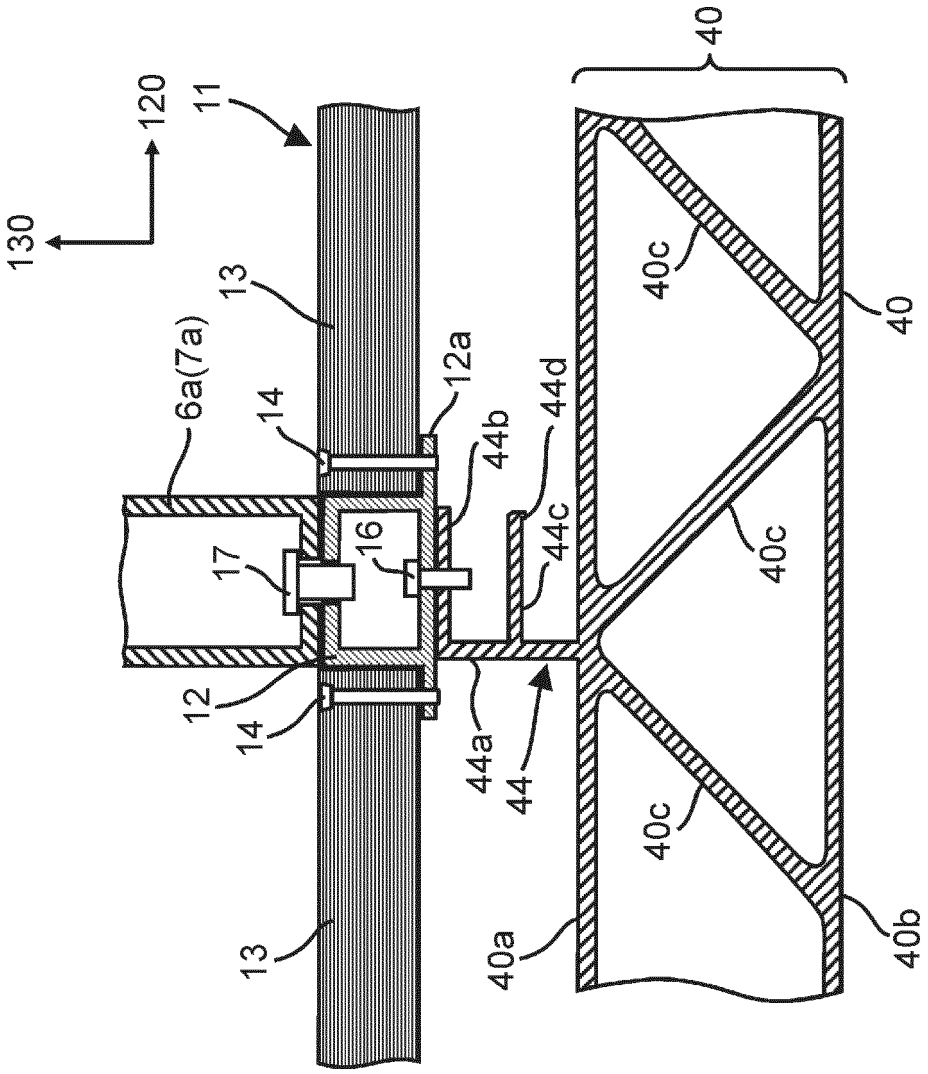
130
120
11
13
6a(7a)
14
17
16
12
14
13
12a
44b
44d
44c
44a
44
40
40c
40c
40c
40a
40b
40

FIG.8

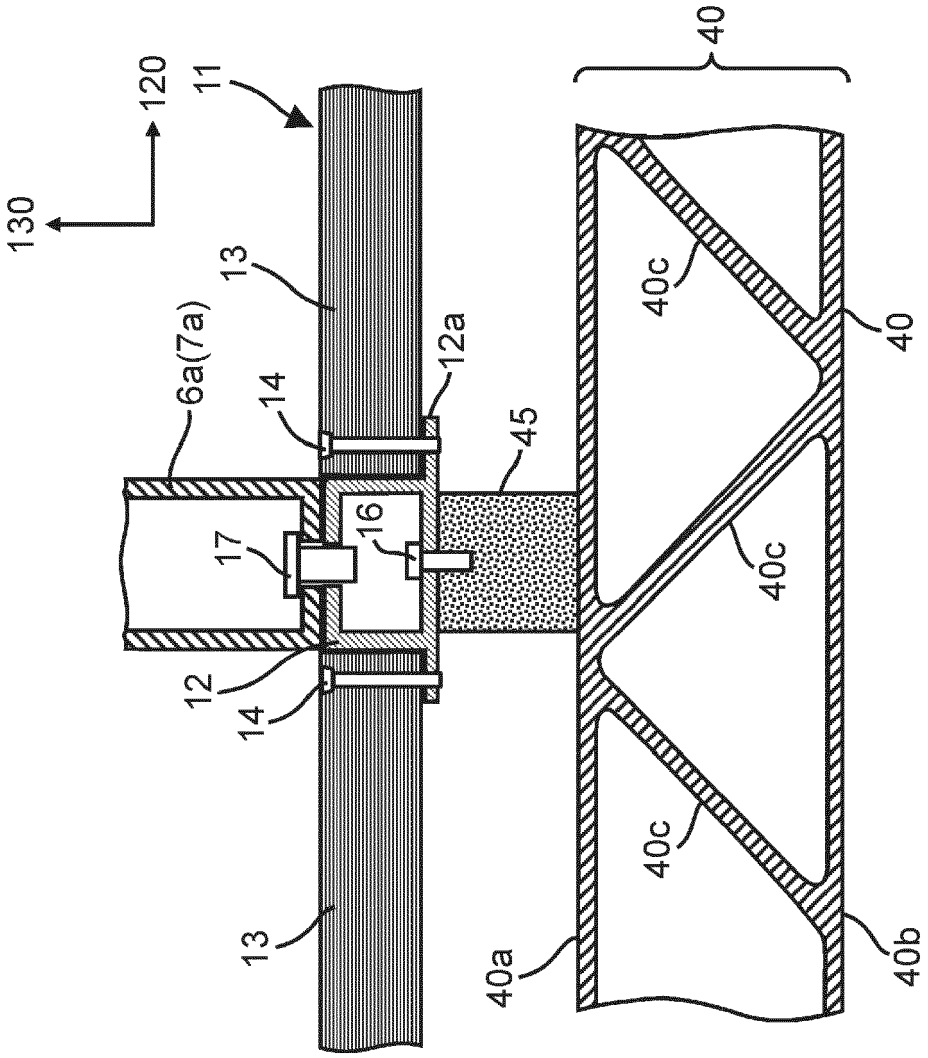
130
120
11
13
6a(7a)
14
17
12
14
13
12a
16
45
40
40c
40c
40c
40a
40
40b

FIG.9

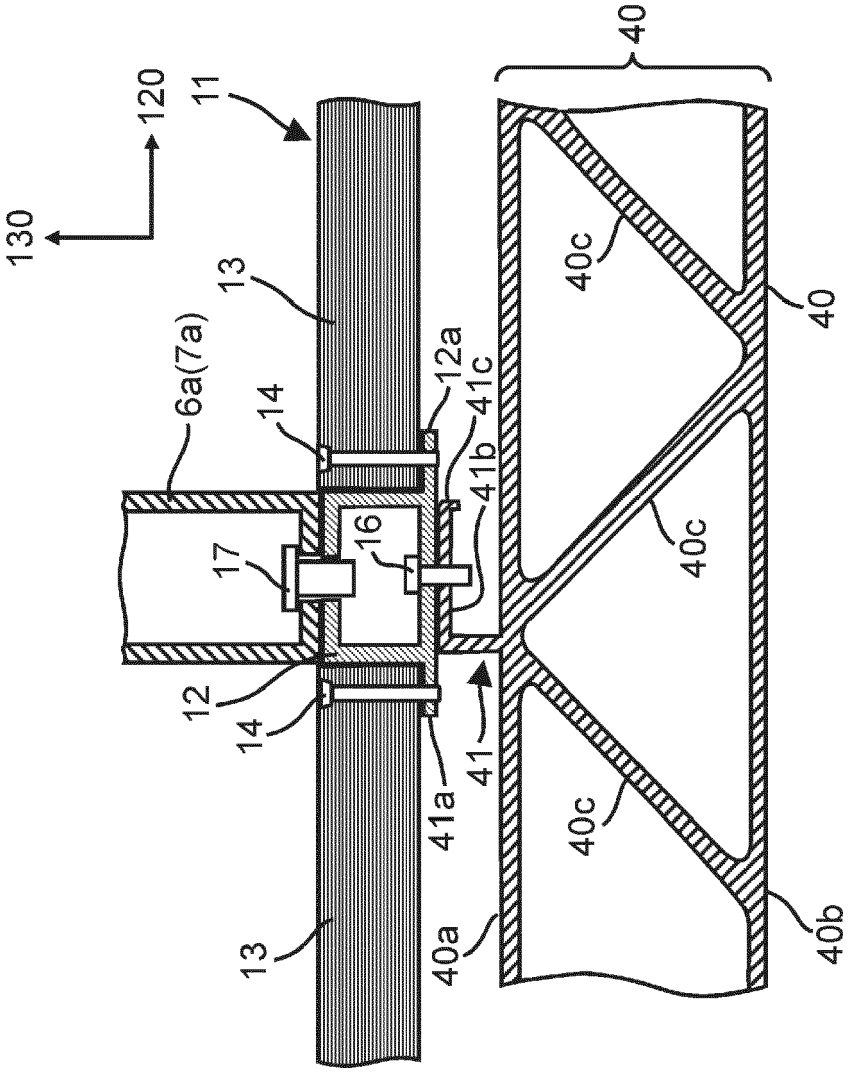
130
120
11
13
6a(7a)
14
17
16
12
14
13
12a
41c
41b
41
41a
40a
40
40c
40c
40c
40
40b

FIG.10

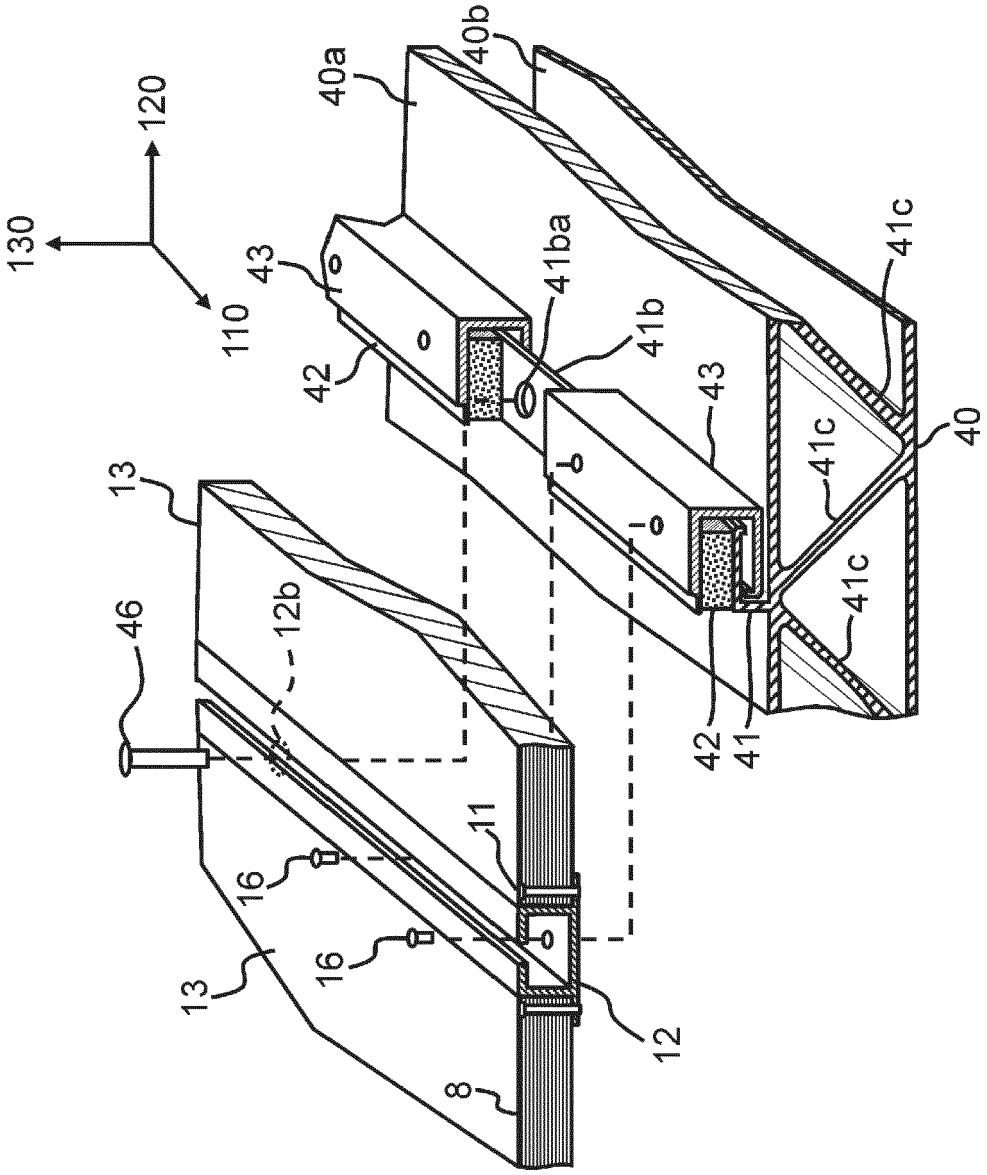
130
120
110
40a
40b
43
41ba
41b
42
43
41c
41c
40
41c
42
41
13
46
12b
11
16
16
13
12
8

Europäisches Patentamt
European Patent Office
Office européen des brevets

EUROPEAN SEARCH REPORT

Application Number
EP 18 18 0975

DOCUMENTS CONSIDERED TO BE RELEVANT

Category	Citation of document with indication, where appropriate, of relevant passages	Relevant to claim	CLASSIFICATION OF THE APPLICATION (IPC)
A	EP 1 508 489 A2 (SIEMENS AG [DE]) 23 February 2005 (2005-02-23) * figure 1 *	1-11	INV. B61D17/10
A	EP 1 193 165 A2 (GETZNER WERKSTOFFE GMBH [AT]) 3 April 2002 (2002-04-03) * figure 3 *	1-11	
A	DD 253 229 A1 (GOERLITZ WAGGONBAU VEB [DD]) 13 January 1988 (1988-01-13) * figure 1 *	1-11	
E	DE 10 2013 200628 A1 (SIEMENS AG [DE]) 17 July 2014 (2014-07-17) * figure 3 *	1	

TECHNICAL FIELDS SEARCHED (IPC)

B61D

The present search report has been drawn up for all claims

Place of search	Date of completion of the search	Examiner
Munich	11 October 2018	Lorandi, Lorenzo

CATEGORY OF CITED DOCUMENTS

X : particularly relevant if taken alone
Y : particularly relevant if combined with another document of the same category
A : technological background
O : non-written disclosure
P : intermediate document

T : theory or principle underlying the invention
E : earlier patent document, but published on, or after the filing date
D : document cited in the application
L : document cited for other reasons
& : member of the same patent family, corresponding document

EPO FORM 1503 03.82 (P04C01)

ANNEX TO THE EUROPEAN SEARCH REPORT ON EUROPEAN PATENT APPLICATION NO. EP 18 18 0975

This annex lists the patent family members relating to the patent documents cited in the above-mentioned European search report.
The members are as contained in the European Patent Office EDP file on
The European Patent Office is in no way liable for these particulars which are merely given for the purpose of information.

11-10-2018

Patent document cited in search report	Publication date	Patent family member(s)	Publication date
EP 1508489 A2	23-02-2005	DE 10337930 A1	17-03-2005
		EP 1508489 A2	23-02-2005
		ES 2426002 T3	18-10-2013
EP 1193165 A2	03-04-2002	AT 409751 B	25-11-2002
		DE 50100898 D1	11-12-2003
		DK 1193165 T3	16-02-2004
		EP 1193165 A2	03-04-2002
		ES 2210079 T3	01-07-2004
		PT 1193165 E	31-03-2004
		TR 200400200 T4	22-03-2004
DD 253229 A1	13-01-1988	NONE	
DE 102013200628 A1	17-07-2014	CA 2898247 A1	24-07-2014
		CN 205098203 U	23-03-2016
		DE 102013200628 A1	17-07-2014
		EP 2906455 A1	19-08-2015
		US 2015353103 A1	10-12-2015
		WO 2014111224 A1	24-07-2014

EPO FORM P0459

For more details about this annex : see Official Journal of the European Patent Office, No. 12/82

REFERENCES CITED IN THE DESCRIPTION

This list of references cited by the applicant is for the reader's convenience only. It does not form part of the European patent document. Even though great care has been taken in compiling the references, errors or omissions cannot be excluded and the EPO disclaims all liability in this regard.

Patent documents cited in the description

- JP 9150738 A **[0005]**
- JP 2001048017 A **[0005]**
- EP 1193165 A **[0005]**