(19) Europäisches Patentamt
European Patent Office
Office européen des brevets

(11) EP 3 495 297 A1

(12) **EUROPEAN PATENT APPLICATION**

(43) Date of publication:
12.06.2019 Bulletin 2019/24

(51) Int Cl.:
B65H 49/18 *(2006.01)*

(21) Application number: **18211504.8**

(22) Date of filing: **11.12.2018**

(84) Designated Contracting States:
AL AT BE BG CH CY CZ DE DK EE ES FI FR GB GR HR HU IE IS IT LI LT LU LV MC MK MT NL NO PL PT RO RS SE SI SK SM TR
Designated Extension States:
BA ME
Designated Validation States:
KH MA MD TN

(30) Priority: **11.12.2017 EP 17290159**

(71) Applicants:
- **Société de Trefilerie d'Alsace SAS**
  67110 Reichshoffen (FR)
- **Wolf, Daniel**
  33332 Gütersloh (DE)
- **Verace BVBA**
  1790 Essene (BE)
- **Gustav Wolf Polska Sp. z o.o.**
  44-100 Gliwice (PL)

(72) Inventors:
- **Van den Broecke, Hugo**
  1790 Essene (BE)
- **Wolf, Daniel**
  33332 Gütersloh (DE)

(74) Representative: **De Clercq & Partners**
Edgard Gevaertdreef 10a
9830 Sint-Martens-Latem (BE)

(54) **DEVICE AND METHOD FOR PROCESSING WIRES**

(57) Methods and devices for processing wires. One method comprises unwinding a spool (110) and concurrently counting the number of turns of wire which are unwound from the spool (110). This number and the total number of turns on the spool (110) are used for predicting when the spool (110) will be fully unwound.

EP 3 495 297 A1

Description

TECHNICAL FIELD

[0001] The present invention is in the field of wire processing, for example in the field of processing steel wires.

BACKGROUND

[0002] Production of wires on the one hand and subsequent processing steps on the wires are commonly performed at different locations. In order to transport wire efficiently from production sites to sites at which subsequent processing occurs, wires are commonly wound on spools. Several parameters of these wire spools are determined or calculated during the production process, e.g. the length of the wire on the spool and the weight of the wire spool. These parameters are subsequently used to determine, upon unwinding the spool, when the wire will be completely unwound. Several methods and devices exist for predicting at which point in time wire spools are completely unwound. These methods and devices either rely on calculations or measuring equipment to determine the length of wire that is rolled on a coil. Unfortunately, the methods relying on calculations are insufficiently accurate. On the other hand, existing measuring equipment configured for measuring the actual length of wire which is wound on or off the coil is either not sufficiently accurate either, or it is very expensive.

[0003] As existing high-accuracy measuring equipment is prohibitively expensive, less expensive measuring equipment or calculations are often used for determining when wire will be completely unwound from a spool. The resulting uncertainties result in process inefficiencies. In particular, when wire is unwound earlier than expected, loose wire ends may upset process lines and the process lines need to be reversed in order for an operator to be able to weld a subsequent wire to the end of the previous wire.

[0004] Thus there remains a need for methods and devices for accurately and cost-effectively predicting when wire will be unwound from a spool.

SUMMARY

[0005] The devices and methods according to the present disclosure meet the aforementioned needs.

[0006] The present invention provides in a method for unwinding a cold drawn steel wire from a spool comprising the steps:

- providing a spool, the spool carrying cold drawn steel wire, the wire having a weight of at least 100 kg;
- providing a total turn count indicative of a total number of turns of wire which are wound on the spool;
- unwinding the spool at a speed of at least 1.0 m/s;
- registering a number of turns of wire that are unwound from the spool; and,
- predicting when the spool will be fully unwound by means of the total turn count, and by means of the number of turns of wire that are unwound from the spool.

[0007] In particular, the method as disclosed here provides that the step of counting the number of turns of wire that are unwound from the spool includes the following sub-steps:

- registering a first turn count indicative of a first number of turns of wire unwound off the spool;
- registering a first timestamp indicative of when the first turn count was registered;
- registering a second turn count indicative of a second number of turns of wire unwound off the spool; and,
- registered a second timestamp indicative of when the second turn count was registered;

and wherein the step of predicting when the spool will be fully unwound takes into account the total turn count, the first timestamp, the second timestamp, the first turn count, and the second turn count.

[0008] In a particular embodiment the present invention provides in a system for determining when a cold drawn steel wire will be fully unwound comprising

- a mechanism for holding a spool, the spool carrying cold drawn steel wire, the wire having a weight of at least 100 kg;
- a memory unit configured to store a total turn count indicative of a total number of turns of wire which are wound on the spool;
- a mechanism for unwinding the spool at a speed of at least 1.0 m/s;
- a turn counting unit configured for counting a number of turns of wire that are unwound from the spool; and,
- a prediction unit configured for predicting when the spool will be fully unwound using the total turn count, and by means of the number of turns of wire unwound from the spool.

[0009] Preferably, the system as disclosed herein provides that the counting unit is configured to:

- register a first turn count indicative of a first number of turns of wire unwound off the spool; and,
- register a second turn count indicative of a second number of turns of wire unwound off the spool;

wherein the system further comprises a time-keeping unit configured to

- register a first timestamp indicative of when the first turn count was registered; and,
- register a second timestamp indicative of when the

second turn count was registered;

and wherein the prediction unit is configured to predict when the spool will be fully unwound based on the total turn count, the first timestamp, the second timestamp, the first turn count, and the second turn count.

[0010] In a particular embodiment the present invention provides in a wire processing plant for processing cold drawn steel wire comprising a plurality of wire processing lines (100) for cold drawn processing steel wire, each wire processing line (100) comprising a spool (110) carrying cold drawn steel wire having a weight of at least 100 kg, a wire processing station (130), and a system for determining when a cold drawn steel wire will be fully unwound as disclosed herein.

[0011] In a particular embodiment the wire processing plant as disclosed herein further comprises a comparator unit and a spool control unit, wherein

- the wire processing plant is configured to determine a first predicted unwinding time of a first spool and a second predicted unwinding time of a second spool;
- the comparator unit is configured for comparing the first predicted unwinding time and the second predicted unwinding time;
- the spool control unit is configured to
- slow down the first spool or slow down the second spool when the difference between the first predicted unwinding time and the second predicted unwinding time is smaller than a predetermined value; and/or,
- automatically stop the first spool when the first spool is fully unwound or when reaching a preset amount of turns and/or automatically stop the second spool when the second spool is fully unwound or when reaching a preset amount of turns.

[0012] In a particular embodiment the present invention provides in a method for handling a cold drawn steel wire comprising the steps:

- providing a spool;
- winding a cold drawn steel wire on the spool until at least 100 kg of cold drawn steel wire has been wound on the spool;
- counting the number of turns of wire being wound on the spool, thereby obtaining a total turn count;
- storing the spool;
- unwinding the spool at a speed of at least 1.0 m/s;
- counting the number of turns of wire being unwound from the spool, thereby obtaining a number of turns of wire unwound from the spool; and,
- predicting when the spool will be completely unwound by means of the total turn count, and by means of the number of turns of wire unwound from the spool.

[0013] In a particular the method as provided herein provides in a step of counting the number of turns of wire that are unwound from the spool includes the following sub-steps:

- registering a first turn count indicative of a first number of turns of wire unwound off the spool;
- registering a first timestamp indicative of when the first turn count was registered;
- registering a second turn count indicative of a second number of turns of wire unwound off the spool; and,
- registered a second timestamp indicative of when the second turn count was registered;

and wherein the step of predicting when the spool will be fully unwound takes into account the total turn count, the first timestamp, the second timestamp, the first turn count, and the second turn count.

[0014] In a particular embodiment the present invention provides in a method for predicting when a spool will be unwound, the method comprising the steps:

- receiving a total turn count indicating a total number of turns of a cold drawn steel wire wound on the spool, the spool carrying cold drawn steel wire, the wire having a weight of at least 100 kg;
- receiving a number of turns of wire unwound from the spool; and,
- calculating the point in time when the spool will be unwound, based on the total turn count, and the number of turns of wire unwound from the spool.

[0015] In a particular the method as provided herein provides in the steps:

- receiving a first turn count indicative of a first number of turns of the wire unwound off the spool;
- receiving a first timestamp indicative of when the first turn count was determined;
- receiving a second turn count indicative of a second number of turns of the wire unwound;
- receiving a second timestamp indicative of when the second turn count was determined; and,
- calculating the point in time when the spool will be unwound, based on the total turn count, the first timestamp, the second timestamp, the first turn count, and the second turn count.

[0016] In a particular embodiment the present invention provides in a computer program product configured for executing a methods as disclosed herein.

[0017] In a particular embodiment the present invention provides in the use of a turn counting device for predicting when a spool comprising cold drawn steel wire will be completely unwound.

DESCRIPTION OF THE FIGURES

[0018] The following description of the figures of spe-

cific embodiments of the invention is only given by way of example and is not intended to limit the present explanation, its application or use. In the drawings, identical reference numerals refer to the same or similar parts and features.

Fig. 1 shows a wire processing line (100).
Fig. 2 shows a wire production line (200).

[0019] The following reference numerals are used in the description and figures:
100 - wire processing line; 110 - spool; 120 - wire; 130 - processing station; 200 - wire production line; 210 - spool; 220 - wire; 230 - wire production station.

DESCRIPTION OF THE INVENTION

[0020] As used below in this text, the singular forms "a", "an", "the" include both the singular and the plural, unless the context clearly indicates otherwise.
The terms "comprise", "comprises" as used below are synonymous with "including", "include" or "contain", "contains" and are inclusive or open and do not exclude additional unmentioned parts, elements or method steps. Where this description refers to a product or process which "comprises" specific features, parts or steps, this refers to the possibility that other features, parts or steps may also be present, but may also refer to embodiments which only contain the listed features, parts or steps. The enumeration of numeric values by means of ranges of figures comprises all values and fractions in these ranges, as well as the cited end points.
[0021] The term "approximately" as used when referring to a measurable value, such as a parameter, an amount, a time period, and the like, is intended to include variations of +/- 10% or less, preferably +/-5% or less, more preferably +/-1% or less, and still more preferably +/-0.1 % or less, of and from the specified value, in so far as the variations apply to the invention disclosed herein. It should be understood that the value to which the term "approximately" refers per se has also been disclosed.
All references cited in this description are hereby deemed to be incorporated in their entirety by way of reference.
Unless defined otherwise, all terms disclosed in the invention, including technical and scientific terms, have the meaning which a person skilled in the art usually gives them. For further guidance, definitions are included to further explain terms which are used in the description of the invention.
[0022] Provided herein are devices and methods which allow accurately and cost effectively determining when a spool of wire is completely unwound. The present methods and devices are compatible with any type of wire. Steel wire is specifically preferred. Preferably, the steel wire is a cold-drawn steel wire. Preferably, the wire is a cold-drawn steel bead wire. Bead wires are used for reinforcing tire bead.
The term "spool" as used herein refers to a body on which wire can be wound, or is wound. Preferably, the spool is a low-flanged or unflanged cylinder but spools having a differently shaped body exist as well. Synonyms for the term "spool" are "bobbin" and "reel". Preferably, when fully wound, the spool carries cold drawn steel wire having a weight of at least 100 kg, optionally a weight between 200 kg and 2 metric tons, optionally a weight between 400 kg and 1 metric ton.
[0023] One of the methods provided herein is a method for unwinding a wire from a spool comprising the steps of providing a spool and a total turn count. The total turn count is a numerical value which is indicative of the total number of turns of wire which are wound on the spool. As the spool is unwound, the number of turns of wire which are unwound from the spool is registered. This registration may for instance be performed using a low cost hoigh sensor that detects metal/non metal, or a change in material. An excavation in the spool, or a metal piece mounted on the spool can therefore be detected by the sensor. Optionally, a timestamp is registered as well, the timestamp being indicative of the point in time at which the number of turns of wire which are unwound from the spool is registered. By means of the total turn count and the number of turns of wire that are unwound from the spool, and optionally by means of the timestamp, it is calculated when the spool will be fully unwound. The calculations can optionally be further based on parameters such as the width of the spool, the diameter of the smallest winding, the diameter of the largest winding, the actual turning speed of the coil during processing, as well as the wire speed or the default wire speed of the coil during processing. A calculating device can calculate the remaining time on the basis of these parameters. Upon unwinding the spool the accuracy of the calculation increases because less and less turns remain. On the basis of the amount of turns remaining, the length of the wire remaining can be calculated based on the internal diameter and interpolation for the largest remaining diameter, this combined with either the spool turning speed or the wire speed permits to calculate the time at which the spool will be completely unwound.
This method allows accurately and efficiently predicting when a spool will be fully unwound which enhances the efficiency of wire processing plants in which the method is used. It is noted that with the present methods, there is no need to know the length of wire on the spool, or the length of the wire unwound from the spool, in order to predict when the spool will be completely unwound. This is advantageous because it is generally challenging to pinpoint the precise length of wire wound on, or unwound from a spool. Conversely, determining the number of turns wound on or unwound from a spool is comparatively easy as this merely involves counting the number of revolutions of the spool.
The recitation "fully unwound" as used herein refers to the condition when all the wire which is normally usable in a process is unwound from the spool. Accordingly, the

precise meaning of the recitation "fully unwound" is readily apparent to the skilled person and depends on the process in which the spool is unwound. For example, the term "fully unwound" indicates that between 0 and 1 turns, between 0 and 2 turns, between 0 and 4 turns, between 1 and 6 turns, between 1 and 20 turns, or any preset amount of turns remain on the spool.

The recitation "turns of wire" refers to the number of revolutions of wire which are present on a spool. A reference to "an amount of turns of wire on a spool", to "an amount of turns", to "a number of turns", or to a like expression therefore refers to an indication of the number of complete revolutions of wire which are present on a spool. The expression "total turn count" refers to the total number of turns which are wound on a spool. In other words, the "total turn count" is the number of turns of wire on the spool once the spool is finished, and before the spool is unwound.

Preferably, the speed at which the wire is unwound from the spool is higher than 1.0 m/s, or higher than 5.0 m/s. Optionally, the speed at which the wire is unwound from the spool is between 6.0 and 10.0 m/s.

Typically, the diameter of steel wires ranges between 0.5 mm and 5 mm. The diameter of the spool is typically between 0.5 and 1.5m. The spool turning speed preferably ranges between 3 and 10 turns per second.

In some embodiments, the step of counting the number of turns of wire that are unwound from the spool includes a number of sub-steps. In particular, the sub-steps include registration of a first turn count and a second turn count. The first turn count is indicative of a first number of turns of wire unwound off the spool. The second turn count is indicative of a second number of turns of wire unwound off the spool. Also, and preferably concurrently, a first timestamp and a second timestamp are registered. The first timestamp is indicative of when the first turn count was registered. The second timestamp is indicative of when the second turn count was registered. Additionally, the step of predicting when the spool will be fully unwound takes into account the total turn count, the first timestamp, the second timestamp, the first turn count, and the second turn count.

Accordingly, the point in time when the spool is fully unwound can be more accurately determined.

Further provided herein is a system for determining when a wire will be fully unwound. Preferably, the system is configured for executing a method for unwinding a wire from a spool as described elsewhere in the present disclosure.

The system comprises a mechanism for holding a spool. The system further comprises a memory unit. The memory unit is configured to store a total turn count. The total turn count is indicative of the total number of turns of wire which are wound on the spool. The system further comprises a mechanism for unwinding the spool and a turn counting unit. The turn counting unit is configured for counting the number of turns of wire that are unwound from the spool. Optionally, the turn counting unit is further configured for registering a timestamp, the timestamp being indicative of the point in time at which the number of turns of wire which are unwound from the spool is registered. The system additionally comprises a prediction unit. The prediction unit is configured for predicting when the spool will be fully unwound using the total turn count, by means of the number of turns of wire unwound from the spool, and optionally by means of the timestamp. Such systems allow efficient and accurate determination of the point in time when a spool of wire will be fully unwound.

In some embodiments, the system is configured for unwinding the spool at a speed higher than 1.0 m/s, or higher than 5.0 m/s, optionally at a speed between 6.0 and 10.0 m/s.

[0024] In some embodiments, the counting unit is configured to register a first turn count and a second turn count. The first turn count is indicative of a first number of turns of wire unwound off the spool. The second turn count is indicative of a second number of turns of wire unwound off the spool. The system further comprises a time-keeping unit. The time-keeping unit is configured to register a first timestamp and to register a second timestamp. The first timestamp is indicative of when the first turn count was registered, and the second timestamp is indicative of when the second turn count was registered. In these embodiments, the system's prediction unit is configured to predict when the spool will be fully unwound based on the total turn count, the first timestamp, the second timestamp, the first turn count, and the second turn count.

This further enhances the accuracy of the prediction of the point in time when the spool will be fully unwound

Further provided herein is a wire processing plant, preferably a bead wire processing plant, a (bead) wire patenting line or a (bead) wire drawing line, that comprises a plurality of wire processing lines. Each wire processing line comprises a spool, a wire processing station, and a system for determining when a wire will be fully unwound. The wire processing station may be, for example, a wire coating unit. The system for determining when a wire will be fully unwound is described elsewhere in the present disclosure.

In such a wire processing plant, a line operator can accurately determine when different spools will be completely unwound. This in turn allows better planning the replacement of unwound spools such that the wire processing plant's efficiency is increased and less time is lost visually checking the state of the spools.

In some embodiments, the wire processing plant comprises from at least 5 to at most 40, from at least 10 to at most 30, or from at least 15 to at most 25 wire processing lines. Surprisingly, the efficiency enhancements brought to wire processing plants according to the present disclosure are especially pronounced for wire processing plants having these numbers of wire processing lines.

In some embodiments, the wire processing plant further

comprises a comparator unit and a spool control unit. The wire processing plant is configured to determine a first predicted unwinding time of a first spool and a second predicted unwinding time of a second spool. The comparator unit is configured for comparing the first predicted unwinding time and the second predicted unwinding time. The spool control unit is configured to slow down unwinding of the first spool or to slow down unwinding of the second spool when the difference between the first predicted unwinding time and the second predicted unwinding time is smaller than a predetermined value. Additionally or alternatively, the spool control unit is configured to speed up unwinding of the first spool or to speed up unwinding of the second pool when the difference between the first predicted unwinding time and the second predicted unwinding time is smaller than a predetermined value. Changing the unwinding speed in such a way ensures that no two spools become completely unwound at the same time. Accordingly, continuous operation of wire processing equipment can be ensured. Also, the work of line operators is streamlined because they do not need oversee two spool replacements at the same time.

In some embodiments, the time difference between the first and second predicted unwinding times below which the spool control unit is configured to slow down or speed up unwinding of the first or second spool is between 1 second and 1 hour, between 30 seconds and 30 minutes, between 1 minute and 10 minutes, or between 2 minutes and 5 minutes. Preferably, unwinding of the spool which is predicted to be fully unwound the latest is slowed down. Preferably, unwinding of the spool which is predicted to be fully unwound the earliest is sped up.

Instead of, or in addition to changing controlling the speed of unwinding, the spool control unit may be configured to automatically stop the first spool when the first spool is fully unwound and/or automatically stop the second spool when the second spool is fully unwound. Stopping the spools when they are fully unwound ensures that no loose wire ends travel through the wire processing equipment. Loose wire ends traveling through the wire processing equipment is disadvantageous because it commonly results in surplus downtime, thus reducing the operating efficiency of the wire processing equipment. Accordingly, by automatically stopping spools when they are fully unwound, the uptime of wire processing facilities is enhanced.

[0025] In the following paragraphs, the present methods are further explained in a context in which a wire is produced at one location, at one point in time, and in which the wire is processed at another location and/or at another point in time. For example, the wire may be produced in a wire production plant in location A at time a, and the wire may undergo additional process steps at a wire processing plant in a different location B at a different time b.

Accordingly, provided is a method for handling a wire. The method comprises the step of providing a spool and winding the wire on the spool. As the wire is wound on the spool, the number of turns of wire being wound on the spool is counted. The total number of turns of wire that are wound on the spool is named the total turn count. After the wire has been wound on the spool, the spool may be stored. The spool may be stored for e.g. 1-7 days, 1-4 weeks, 1-12 months, 1-10 years, or longer. Optionally, the spool is transported to a different facility. After storage and/or transport, the spool is unwound. As the spool is unwound, the number of turns of wire being unwound from the spool is counted. Optionally, a timestamp is registered as well, the timestamp being indicative of the point in time at which the number of turns of wire which are unwound from the spool is registered. The point in time at which the spool will be completely unwound is predicted by means of the total turn count, by means of the counted number of turns of wire which have been unwound from the spool, and optionally by means of the timestamp.

These methods have the advantage that the production of wire and the performance of additional processing steps performed on a wire can be done at completely different locations and at completely different times.

Preferably, the speed at which the wire is unwound from the spool is higher than 1.0 m/s, or higher than 5.0 m/s. Optionally, the speed at which the wire is unwound from the spool is between 6.0 and 10.0 m/s.

In some embodiments, the step of counting the number of turns of wire that are unwound from the spool includes a number of sub steps. In particular, a first turn count and a second turn count are registered. The first turn count is indicative of a first number of turns of wire unwound off the spool. The second turn count is indicative of a second number of turns of wire unwound off the spool. Also, a first timestamp and a second timestamp are registered. The first timestamp is indicative of when the first turn count was registered. The second timestamp is indicative of when the second turn count was registered. Preferably, the first and second turn count are registered at different times. In these embodiments, the step of predicting when the spool will be fully unwound takes into account the total turn count, the first timestamp, the second timestamp, the first turn count, and the second turn count. Accordingly, the accuracy of the prediction of the point in time at which the spool will be fully unwound is increased.

Further provided is a method for processing a wire. The method includes the steps of one or more of the following methods, all of which have been described above: the method for unwinding a wire from a spool, and the method for handling a wire. In addition, the method comprises the step of subjecting the wire to one or more process steps as long as the spool has not been fully unwound. The efficacy by which wire is processed is greatly enhanced by way of such methods.

Further provided is a method for predicting when a spool will be unwound. Preferably, the method is executed by a computer. The method comprises the step of receiving

a total turn count. The total turn count indicates the total number of turns of wire which are wound on the spool. In addition, the method comprises the step of receiving the number of turns of wire which are unwound from the spool. Based on the total turn count and based on the number of turns of wire unwound from the spool, the point in time when the spool will be unwound is calculated. Preferably, the calculation of the point in time when the spool will be unwound takes into account the point in time at which the number of turns of wire which are unwound from the spool was determined and/or received. This method allows accurately and efficiently predicting when a spool will be fully unwound which enhances the efficiency of wire processing plants in which the method is used.

Preferably, the speed at which the wire is unwound from the spool is higher than 1.0 m/s, or higher than 5.0 m/s. Optionally, the speed at which the wire is unwound from the spool is between 6.0 and 10.0 m/s.

In some embodiments, the method includes the steps of receiving a first turn count and receiving a second turn count. The first turn count is indicative of a first number of turns of wire unwound off the spool. The second turn count is indicative of a second number of turns of wire unwound off the spool. The method further includes the steps of receiving a first timestamp and a second timestamp. The first timestamp is indicative of when the first turn count was determined. The second timestamp is indicative of when the second turn count was determined. As an alternative to receiving a first timestamp and a second timestamp, the method may include the steps of generating a first time stamp based on the point in time when the first turn count is received, and generating a second time stamp based on the point in time when the second turn count is received. Based on the total turn count, the first timestamp, the second timestamp, the first turn count, and the second turn count, the point in time when the spool will be unwound is calculated. Executing the method according to this embodiment further enhances its accuracy.

Further provided is a computer program product configured for executing a method for predicting when a spool will be unwound as provided in the present disclosure. Computer implementations further enhance the accuracy and the efficiency of such methods.

Further provided is the use of a turn counting device for predicting when a spool of wire will be completely unwound. As explained above, the efficacy of wire processing plants is increased by using turn counting devices in such a way.

EXAMPLES

Example 1

[0026] Reference is made to Figs. 1 and 2. Fig 1 shows a wire processing line (100). The wire processing line (100) comprises a spool (110) from which a wire (120) is unwound. The wire is subsequently led through a processing station (130) in which the wire is processed. The processing station (130) may be, for example, a coating station. The wire processing line (100) is comprised in a wire processing plant. The wire processing plant also comprises additional wire processing lines (100). Each wire processing line comprises a system for determining when a wire will be fully unwound.

[0027] The system for determining when a wire will be fully unwound comprises a mechanism for holding a spool, a memory unit, a mechanism for unwinding the spool, a turn counting unit, and a prediction unit. During normal operation, the mechanism for holding a spool holds a spool and the memory unit stores a total turn count, which is a number indicative of a total number of turns of wire which are wound on the spool.

[0028] During normal operation, the mechanism for unwinding the spool unwinds the spool at a rate which is determined by the speed at which the wire is processed in the processing station (130). As the wire is unwound, the turn counting unit counts the number of turns of wire that are unwound from the spool. This number and the total turn count are used by the prediction unit to predict when the spool will be fully unwound.

[0029] Fig. 2 shows a wire production line (200). The wire production line (200) comprises a spool (210) and a wire production station (230). Wire (220) is produced in the wire production station (230). The wire (220) is wound on the spool (210) where it is stored. As the wire (220) is wound on the spool (210), the number of turns of wire which are wound on the spool (210) is counted. The total number of turns of wire which are wound on the spool is the total turn count, which is used in the wire processing line (100) of Fig. 1 to predict when the spool (110,210) will be fully unwound.

Example 2

[0030] In a further example, reference is made to a specific method for unwinding a cold drawn steel wire from a spool. The method comprises the step of providing a spool.

[0031] The spool carries 450 kg of cold drawn steel bead wire. Other common amounts of wire carried by the spool are metric 1 ton and 2 metric tons.

[0032] A turn count is provided which is indicative of the total number of turns of wire which are wound on the spool. The turn count corresponds to the number of turns it takes for the spool to become fully unwound.

[0033] Then, the spool is unwound at a speed between 5 and 10 m/s. As the spool is unwound, the number of turns of wire that are unwound from the spool are registered. The point in time when the spool will be fully unwound is predicted by means of the total turn count, and by means of the number of turns of wire that are unwound from the spool. The prediction yields an uncertainty of when the wire will be fully unwound from the spool that corresponds to the time it takes to unwind the last turn

on the spool.

[0034] The uncertainty of the point in time when the spool will be fully unwound is now estimated for a typical case. Commonly, the spool of wire has a supporting cylinder for supporting the wire which has a diameter of 0.5 m. The diameter of this supporting cylinder corresponds to the diameter of the last turn of wire which is unwound of the turn. Accordingly, the last turn of wire which is unwound from the spool has a length of ca. 1.5 m. At an unwinding speed of 7.0 m/s, the uncertainty on the exact point in time at which the wire will be fully unwound is well under one second.

Comparative example

[0035] Methods according to the present disclosure are now compared with prior art methods.

[0036] One prior art method involves calculating the length of wire based on the weight of wire on the spool, and on the dimensions of the wire and the spool. Such methods are cost-effective but not very accurate. Typically, the accuracy of the wire is calculated with an error of 2.5 to 5.0 %. When the calculated length is used to predict the time when the spool will be fully unwound, an error of up to 30 minutes on the predicted time when the spool will be fully unwound ensues. Such an error is large in practice and causes inefficiencies in wire processing facilities in which the method is used.

[0037] An alternative method of the prior art involves measuring the length of wire by means of a measuring wheel in contact with the wire as the wire is unwound from the spool. This allows measuring the wire's length with an accuracy of 1.0 to 1.5 %. When the measured value is used to predict the time when the spool will be fully unwound, an error of 7 to 10 minutes on the predicted time when the spool will be fully unwound ensues. Such an error remains unsatisfactory large. Also, a measuring wheel for measuring the wire's length, while being a cheap method, it is found to suffer considerably from wear as well as other errors that might occur (e.g. the wire has to be perfectly positioned on the measuring wheel or slips might occur as well). Another prior art method involves measuring the length of wire using a measuring laser. Such methods are accurate, having a measuring error of just 0.1 %. When such laser-measured lengths are used to predict the time when the spool will be fully unwound, an error of about 30 seconds on the predicted time when the spool will be fully unwound ensues. Such an error is generally acceptable in industrial practice, but unfortunately laser-based systems are prohibitively expensive and prone to errors due to pollution with the chemical agents used in the treatment processes of the wires as well as the dust.

[0038] Methods according to the present disclosure, which are based on counting turns of wire which are unwound from spools, yield an uncertainty of just 1 turn. Commonly, a spool has a diameter of 1 m. Accordingly, the last turn which is unwound from such a spool has a length of ca. 3 m. Wire is typically unwound at a speed of 7 m per second. Accordingly, the time it takes for the last turn to be unwound, which equals the uncertainty on when the wire will be fully unwound, is typically less than a second. Such an accuracy is an improvement of several orders of magnitude over the most accurate prior art methods. In addition, the counting-based methods of the present disclosure require only simple, low-cost equipment, making them highly cost-effective.

Claims

1. A method for unwinding a cold drawn steel wire from a spool comprising the steps:

- providing a spool, the spool carrying cold drawn steel wire, the wire having a weight of at least 100 kg;
- providing a total turn count indicative of a total number of turns of wire which are wound on the spool;
- unwinding the spool at a speed of at least 1.0 m/s;
- registering a number of turns of wire that are unwound from the spool; and,
- predicting when the spool will be fully unwound by means of the total turn count, and by means of the number of turns of wire that are unwound from the spool.

2. The method according to claim 1 wherein the step of counting the number of turns of wire that are unwound from the spool includes the following sub-steps:

- registering a first turn count indicative of a first number of turns of wire unwound off the spool;
- registering a first timestamp indicative of when the first turn count was registered;
- registering a second turn count indicative of a second number of turns of wire unwound off the spool; and,
- registered a second timestamp indicative of when the second turn count was registered;

and wherein the step of predicting when the spool will be fully unwound takes into account the total turn count, the first timestamp, the second timestamp, the first turn count, and the second turn count.

3. A system for determining when a cold drawn steel wire will be fully unwound comprising

- a mechanism for holding a spool, the spool carrying cold drawn steel wire, the wire having a weight of at least 100 kg;
- a memory unit configured to store a total turn

count indicative of a total number of turns of wire which are wound on the spool;
- a mechanism for unwinding the spool at a speed of at least 1.0 m/s;
- a turn counting unit configured for counting a number of turns of wire that are unwound from the spool; and,
- a prediction unit configured for predicting when the spool will be fully unwound using the total turn count, and by means of the number of turns of wire unwound from the spool.

4. The system according to claim 3 wherein the counting unit is configured to:

- register a first turn count indicative of a first number of turns of wire unwound off the spool; and,
- register a second turn count indicative of a second number of turns of wire unwound off the spool;

wherein the system further comprises a time-keeping unit configured to

- register a first timestamp indicative of when the first turn count was registered; and,
- register a second timestamp indicative of when the second turn count was registered;

and wherein the prediction unit is configured to predict when the spool will be fully unwound based on the total turn count, the first timestamp, the second timestamp, the first turn count, and the second turn count.

5. A wire processing plant for processing cold drawn steel wire comprising a plurality of wire processing lines (100) for cold drawn processing steel wire, each wire processing line (100) comprising a spool (110) carrying cold drawn steel wire having a weight of at least 100 kg, a wire processing station (130), and a system for determining when a cold drawn steel wire will be fully unwound according to claim 3 or 4.

6. The wire processing plant according to claim 5 further comprising a comparator unit and a spool control unit, wherein

- the wire processing plant is configured to determine a first predicted unwinding time of a first spool and a second predicted unwinding time of a second spool;
- the comparator unit is configured for comparing the first predicted unwinding time and the second predicted unwinding time;
- the spool control unit is configured to
- slow down the first spool or slow down the second spool when the difference between the first predicted unwinding time and the second predicted unwinding time is smaller than a predetermined value; and/or,
- automatically stop the first spool when the first spool is fully unwound or when reaching a preset amount of turns and/or automatically stop the second spool when the second spool is fully unwound or when reaching a preset amount of turns.

7. A method for handling a cold drawn steel wire comprising the steps:

- providing a spool;
- winding a cold drawn steel wire on the spool until at least 100 kg of cold drawn steel wire has been wound on the spool;
- counting the number of turns of wire being wound on the spool, thereby obtaining a total turn count;
- storing the spool;
- unwinding the spool at a speed of at least 1.0 m/s;
- counting the number of turns of wire being unwound from the spool, thereby obtaining a number of turns of wire unwound from the spool; and,
- predicting when the spool will be completely unwound by means of the total turn count, and by means of the number of turns of wire unwound from the spool.

8. The method according to claim 7 wherein the step of counting the number of turns of wire that are unwound from the spool includes the following substeps:

- registering a first turn count indicative of a first number of turns of wire unwound off the spool;
- registering a first timestamp indicative of when the first turn count was registered;
- registering a second turn count indicative of a second number of turns of wire unwound off the spool; and,
- registered a second timestamp indicative of when the second turn count was registered;

and wherein the step of predicting when the spool will be fully unwound takes into account the total turn count, the first timestamp, the second timestamp, the first turn count, and the second turn count.

9. Method for predicting when a spool will be unwound, the method comprising the steps:

- receiving a total turn count indicating a total

number of turns of a cold drawn steel wire wound on the spool, the spool carrying cold drawn steel wire, the wire having a weight of at least 100 kg;
- receiving a number of turns of wire unwound from the spool; and,
- calculating the point in time when the spool will be unwound, based on the total turn count, and the number of turns of wire unwound from the spool.

10. The method according to claim 9 comprising the steps:

- receiving a first turn count indicative of a first number of turns of the wire unwound off the spool;
- receiving a first timestamp indicative of when the first turn count was determined;
- receiving a second turn count indicative of a second number of turns of the wire unwound;
- receiving a second timestamp indicative of when the second turn count was determined; and,
- calculating the point in time when the spool will be unwound, based on the total turn count, the first timestamp, the second timestamp, the first turn count, and the second turn count.

11. A computer program product configured for executing a method according to claim 9 or 10.

12. Use of a turn counting device for predicting when a spool comprising cold drawn steel wire will be completely unwound.

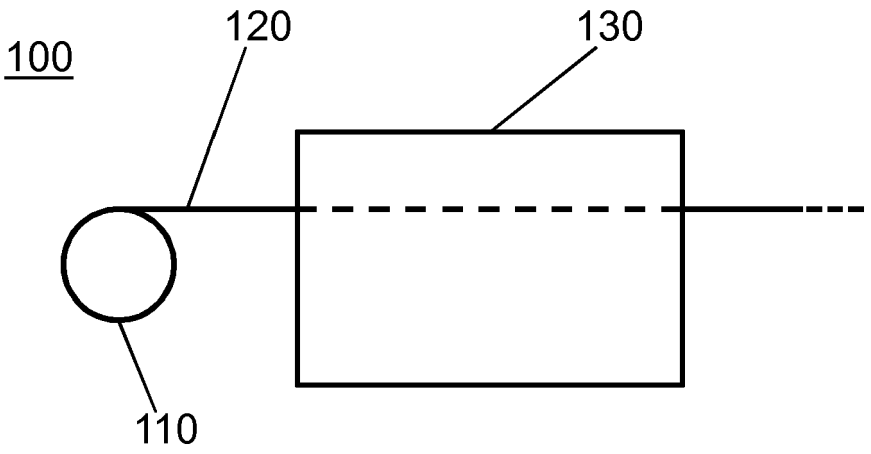

Fig. 1

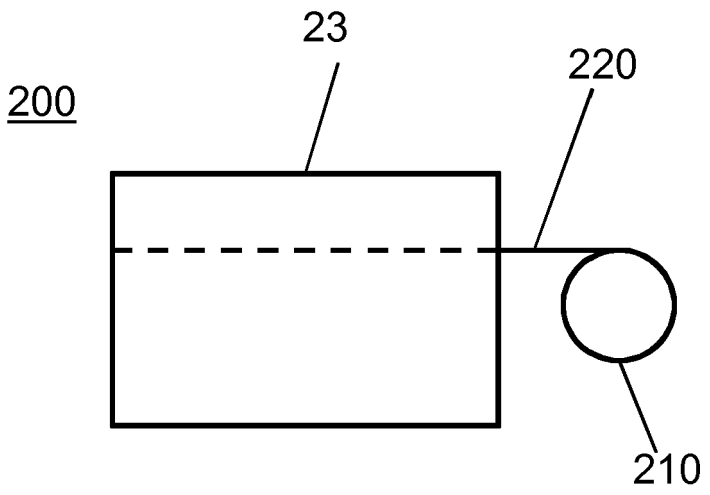

Fig. 2

Europäisches Patentamt
European Patent Office
Office européen des brevets

EUROPEAN SEARCH REPORT

Application Number
EP 18 21 1504

DOCUMENTS CONSIDERED TO BE RELEVANT

Category	Citation of document with indication, where appropriate, of relevant passages	Relevant to claim	CLASSIFICATION OF THE APPLICATION (IPC)
X A	US 2016/023863 A1 (MARTIN ERIC M [US] ET AL) 28 January 2016 (2016-01-28) * paragraph [0011] * * paragraph [0013] * * paragraph [0031] * -----	1,3,5,7, 9,11,12 2,4,6,8, 10	INV. B65H49/18
X A	FR 2 600 085 A1 (LEE COOPER FRANCE [FR]) 18 December 1987 (1987-12-18) * page 1, line 8 - line 10 * * page 1, line 29 - page 2, line 3 * * page 2, line 20 - page 3, line 15 * * page 5, line 5 - line 31 * -----	1,3,5,7, 9,11,12 2,4,6,8, 10	
			TECHNICAL FIELDS SEARCHED (IPC) B65H

The present search report has been drawn up for all claims

Place of search	Date of completion of the search	Examiner
The Hague	26 April 2019	Guisan, Thierry

CATEGORY OF CITED DOCUMENTS

X : particularly relevant if taken alone
Y : particularly relevant if combined with another document of the same category
A : technological background
O : non-written disclosure
P : intermediate document

T : theory or principle underlying the invention
E : earlier patent document, but published on, or after the filing date
D : document cited in the application
L : document cited for other reasons
.....
& : member of the same patent family, corresponding document

EPO FORM 1503 03.82 (P04C01)

ANNEX TO THE EUROPEAN SEARCH REPORT ON EUROPEAN PATENT APPLICATION NO. EP 18 21 1504

This annex lists the patent family members relating to the patent documents cited in the above-mentioned European search report.
The members are as contained in the European Patent Office EDP file on
The European Patent Office is in no way liable for these particulars which are merely given for the purpose of information.

26-04-2019

Patent document cited in search report	Publication date	Patent family member(s)	Publication date
US 2016023863 A1	28-01-2016	NONE	
FR 2600085 A1	18-12-1987	NONE	

EPO FORM P0459

For more details about this annex : see Official Journal of the European Patent Office, No. 12/82