(19) Europäisches Patentamt
European Patent Office
Office européen des brevets

(11) EP 3 636 585 A1

(12) EUROPEAN PATENT APPLICATION

(43) Date of publication:
15.04.2020 Bulletin 2020/16

(51) Int Cl.:
B66F 9/18 *(2006.01)*

(21) Application number: **19198997.9**

(22) Date of filing: **23.09.2019**

(84) Designated Contracting States:
AL AT BE BG CH CY CZ DE DK EE ES FI FR GB GR HR HU IE IS IT LI LT LU LV MC MK MT NL NO PL PT RO RS SE SI SK SM TR
Designated Extension States:
BA ME
Designated Validation States:
KH MA MD TN

(30) Priority: **08.10.2018 US 201816154338**
08.10.2018 US 201816154559

(71) Applicant: **Trinity Bay Equipment Holdings, LLC**
Houston, Texas 77002 (US)

(72) Inventor: **Reedy, Max**
Kemah, TX Texas 77002 (US)

(74) Representative: **Fuchs Patentanwälte Partnerschaft mbB**
Otto-von-Guericke-Ring 7
65205 Wiesbaden (DE)

(54) HALF-MOON LIFTING DEVICE

(57) A pipe coil lifting device (24) includes a superstructure having a pair of longitudinal channel portions (1) attached to and forming sides of an outermost portion of the superstructure, a longitudinal central member (5) extending between the channel portions having at least two supports perpendicular and attached to opposite sides of the longitudinal central member and channel portions, and wherein the top of the superstructure forms a convex upper surface (2) attached to the channel portions, central member and supports.

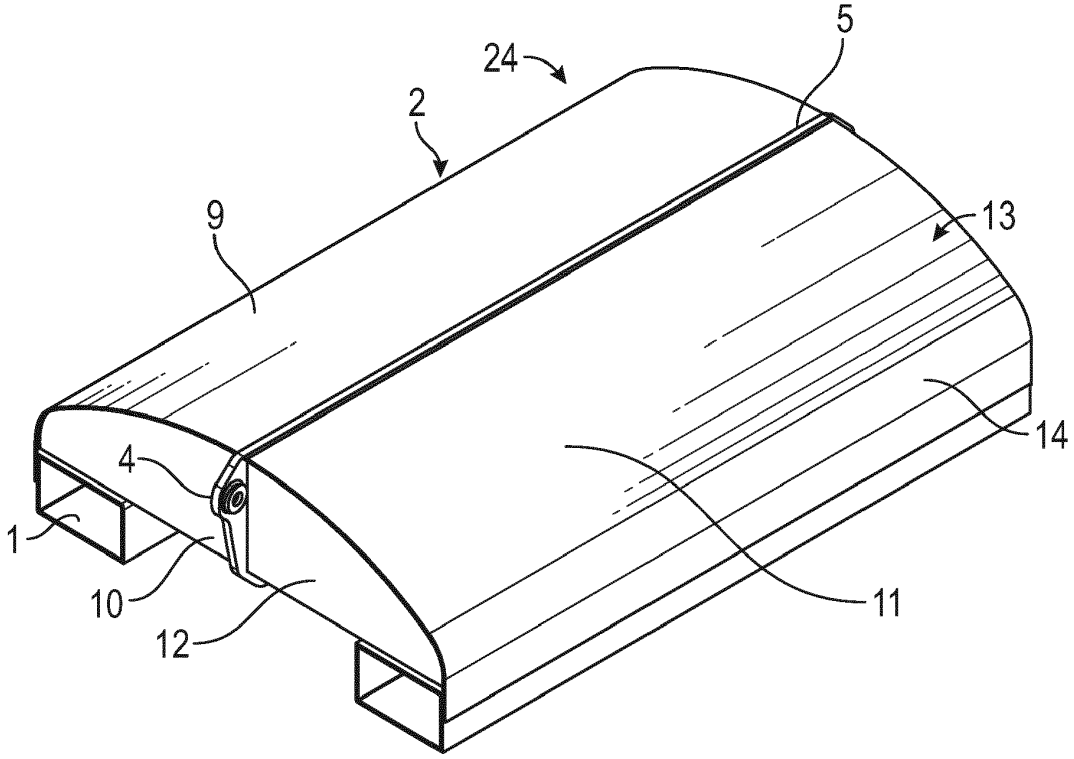

FIG. 17

EP 3 636 585 A1

Description

BACKGROUND

[0001] Flexible pipe is useful in a myriad of environments, including in the oil and gas industry. Flexible pipe may be durable and operational in harsh operating conditions and can accommodate high pressures and temperatures. Flexible pipe may be bundled and arranged into one or more coils to facilitate transporting and using the pipe.

[0002] The flexible pipe may be transported as coils to various sites for deployment (also referred to as uncoiling or unspooling). Different types of devices and vehicles are currently used for loading and transporting coils of pipe, but usually extra equipment and human manual labor is also involved in the process of loading or unloading such coils for transportation and/or deployment. Such coils of pipe are often quite large and heavy. Accordingly, there exists a need for an improved method and apparatus for loading and unloading coils of pipe.

SUMMARY

[0003] Various nonlimiting embodiments provide methods and apparatus for moving coils of flexible pipe. In one nonlimited embodiment, a pipe coil lifting device includes a superstructure with a central longitudinal member and at least two supports attached to opposite sides of the central longitudinal member, with two channels at the outside long-edges of the superstructure attached to the supports, with a convex upper surface attached to the supports of the superstructure.

[0004] In other nonlimiting embodiments, a pipe coil lifting device includes a superstructure having a pair of longitudinal channel portions attached to and forming sides of an outermost portion of the superstructure, a longitudinal central member extending between the channel portions having at least two supports perpendicular and attached to opposite sides of the longitudinal central member and channel portions, and wherein the top of the superstructure forms a convex upper surface attached to the channel portions, central member and supports.

[0005] In further nonlimiting embodiments, method for lifting a pipe coil includes lifting a coil of flexible pipe with a pipe coil lifting device, the pipe coil lifting device comprising a superstructure with a central member and at least two supports perpendicular and attached to opposite sides of the central member, with two channels at the outside long-edges of the superstructure, with a convex surface attached to the supports of the superstructure.

BRIEF DESCRIPTION OF THE DRAWINGS

[0006] A better understanding of the present invention can be obtained when the following detailed description of the preferred embodiment is considered in conjunction with the following drawings, in which:

FIG. 1 is a diagram of a pipe coil lifting device mounted on tines of a forklift according to embodiments of the present disclosure;

FIG. 2 is a diagram of a coil of pipe according to embodiments of the present disclosure;

FIG. 3 is a diagram of a coil of pipe lifted disposed on a pipe coil lifting device using a forklift according to embodiments of the present disclosure;

FIG. 4 illustrates a top view of a pipe coil lifting device according to embodiments of the present disclosure;

FIG. 5 illustrates a view from under a pipe coil lifting device according to embodiments of the present disclosure;

FIG. 6 illustrates a cross-sectional view a pipe coil lifting device according to embodiments of the present disclosure;

FIG. 7 illustrates a cross-sectional view of a pipe coil lifting device according to embodiments of the present disclosure;

FIG. 8 illustrates a cross-sectional view of a pipe coil lifting device according to embodiments of the present disclosure;

FIG. 9 illustrates an end member for a pipe coil lifting device according to embodiments of the present disclosure;

FIG. 10 illustrates a device member for a pipe coil lifting device according to embodiments of the present disclosure;

FIG. 11 illustrates the positions of an end-member attached to device-member that is attached to a central member according to embodiments of the present disclosure;

FIG. 12 illustrates a cross-member for a pipe coil lifting device according to embodiments of the present disclosure;

FIG. 13 illustrates an upper surface of a pipe coil lifting device according to embodiments of the present disclosure;

FIG. 14 illustrates a cross sectional view of the upper surface of a pipe coil lifting device according to embodiments of the present disclosure;

FIG. 15 illustrates the position of a bar at the end of the upper surface of a pipe coil lifting device according to embodiments of the present disclosure;

FIG. 16 illustrates the half pipe attached to the channel for a pipe coil lifting device according to embodiments of the present disclosure;

FIG. 17 illustrates a top view of a pipe coil lifting device according to embodiments of the present disclosure; and

FIG. 18 illustrates a view from under a pipe coil lifting device according to embodiments of the present disclosure.

DETAILED DESCRIPTION

[0007] Embodiments of the present disclosure relate generally to a pipe coil device for use in transporting and/or deploying coils of pipe using a forklift or a crane. Coils of pipe may be self supported, for example, using bands to hold coils together, or coils of pipe may be supported around a reel (which may be referred to as a reel of pipe). Coil lifting devices according to embodiments of the present disclosure for use lifting coils held together with using bands or straps may include a superstructure with a central longitudinal member and one or more cross-members, with two channels at the outside long-edges of the superstructure attached to the cross-members, with a convex upper surface attached to the cross-members of the superstructure.

[0008] Embodiments of the present disclosure will be described below with reference to the figures. In one aspect, embodiments disclosed herein relate to embodiments for aHalf-Moon Lifting Device configured to transport coils of flexible pipe.

[0009] **FIG. 1** shows a diagram of a Half-Moon Lifting Device 24 disposed on the tines **40** of a forklift **30** according to embodiments of the present disclosure. A forklift may be equipped with a hydraulic side-shift function for moving or adjusting the forks or tines.

[0010] Coil of pipe **102** may be formed by wrapping pipe into a coil with an interior channel **104** formed axially therethrough, where the coil of pipe **102** may be moved as a single package or bundle of coiled pipe, as shown in **FIG. 2.** In **FIG. 3** a coil of pipe **102** is illustrated disposed on the Half-Moon Lifting Device **24.** Each complete turn of coiled pipe may be referred to as a wrap of pipe. Multiple wraps of pipe in a coil of pipe may be configured in columns along an axial dimension of the coil of pipe and/or configured in layers along a radial dimension of the coil of pipe. For example, multiple columns of wraps may be formed along an axial direction of the coil of pipe, where the axial dimension of the coil of pipe is based on the diameter of the pipe and the number and axial position of wraps forming the coil of pipe **102.** Further, multiple layers of wraps may be formed along a radial direction of the coil of pipe, where the radial dimension of the coil of pipe is based on the diameter of the pipe and the number and radial position of the wraps forming the coil of pipe.

[0011] As shown in **FIG. 2,** coil of pipe **102** may be one or more layers (e.g., layers **108** and **110)** of pipe packaged or bundled into a larger coil. Coil of pipe **102** may include at least one or more layers of pipe that has been coiled into a particular shape or arrangement. As shown in **FIG. 2,** coil of pipe **102** is coiled into a substantially cylindrical shape having substantially circular bases **103** and **105** formed on each end of coil of pipe **102,** where the axial dimension of coil of pipe **102** is measured between the two bases **103,105.** In addition, the coil of pipe may be attached to a pipe coil skid **106.**

[0012] A pipe, as understood by those of ordinary skill, may be a tube to convey or transfer any water, gas, oil, or any type of fluid known to those skilled in the art. The pipe used to make up coil of pipe **102** may be made of any type of materials including without limitation plastics, metals, a combination thereof, composites (e.g., fiber reinforced composites), or other materials known in the art.

[0013] In one or more embodiments, the pipe used to make up coil of pipe **102** may be a flexible type of pipe. Flexible pipe is used frequently in many applications, including without limitation, both onshore and offshore oil and gas applications. Flexible pipe may include Flexible Composite Pipe (FCP) or Reinforced Thermoplastic Pipe (RTP). A FCP /RTP pipe may itself be generally composed of several layers. In one or more embodiments, a flexible pipe may include a high- density polyethylene ("HDPE") pipe having a reinforcement layer and an HDPE outer cover layer. Additionally, various types of polyethylene are available for flexible pipe composition. Other polymers may also be used such as nylon, PVDF, polypropylene and many others. Thus, flexible pipe may include different layers that may be made of a variety of materials and also may be treated for corrosion resistance. For example, in one or more embodiments, pipe used to make up a coil of pipe may have a corrosion protection shield layer that is disposed over another layer of steel reinforcement. In this steel reinforced layer, helically wound steel strips may be placed over a liner made of thermoplastic pipe. Flexible pipe may be designed to handle a variety of pressures. Further, flexible pipe may offer unique features and benefits versus steel/carbon steel pipe lines in the area of corrosion resistance, flexibility, installation speed andre-usability.

[0014] Coils of pipe may be made with coil having an outer diameter ranging, for example, from about 2 inches (5.1 cm) to about 10 inches (25.4 cm). However, pipe having other dimensions may be coiled to form a coil of pipe and loaded for transportation according to embodiments of the present disclosure. Accordingly, pipe that that may be spooled or coiled into coil of pipe **102** may be made to suit a number of dimensions and may have any diameter useful to a particular project.

[0015] As known to those of ordinary skill in the art,

pipe used to make up coil of pipe 102 may be coiled using spoolers or other coiler machines suited for such a function. Those of ordinary skill will recognize that the present disclosure is not limited to any particular form of coiler or other device that may be used to form pipe into a coil. Coiling pipe into a coil of pipe, such as **102,** assists when transporting pipe, which may be several hundred feet in length in one or more embodiments. Further, coil of pipe **102** may be assembled as a coil to facilitate deployment of the coil. Deployment, as described above and used herein, may refer to the action of unspooling or unwinding the pipe from coil of pipe **102.**

[0016] After being assembled into a coil, coil of pipe **102** may include an interior channel **104** formed axially through the coil of pipe **102.** Interior channel **104** is a bore disposed generally in the center of coil of pipe **102.** Interior channel **104** is substantially circular shaped. The coil of pipe **102** may have an outer diameter (OD) and an inner diameter (ID), where the inner diameter is defined by the interior channel.

[0017] In one or more embodiments, coil of pipe **102** may have an outer diameter ranging from about 60 inches (1.5 m), which may occur, for example, when coil of pipe **102** has at least two layers of 2 inch pipe, to about 192 inches (4.9 m). In one or more embodiments, a coil of pipe may have an inner diameter ranging, for example, from about 84 inches (2.1 m) to about 126 inches (3.2 m). Further, in one or more embodiments, a coil of pipe may have an axial dimension (width) ranging from about 5 inches (12.7 cm) to about 92 inches (2.3 m). However, these are merely exemplary measurements. Those of ordinary skill in the art will appreciate that any range of dimensions (inner and outer diameters and width) may be accommodated using one or more embodiments.

[0018] Skid **106** illustrated in **FIG. 2** may be a platform upon which coil of pipe **102** may be disposed to hold the coil of pipe **102** in a vertical orientation. In one or more embodiments, coil of pipe **102** may be loaded and unloaded for transportation while remaining on skid **106.**

[0019] Now turning to **FIG. 4** various illustrative embodiments of a pipe coil lifting device **24** ('Half-Moon Lifting Device') are illustrated. The device is used to access the interior diameter of a coil of pipe **102,** and used with a forklift to carry and move the pipe. Various aspects of a lifting device **24** suitable for moving a coil of pipe with a wide range of diameters are illustrated in **FIGS. 4** to **16.** It should be noted that various sizes of lifting devices are suitable for moving a coil of pipe.

[0020] As illustrated in **FIG. 5,** the device has a superstructure including a pair of channels (or channel portions) **1,** the channels or channel portions accommodating forks or tines of a forklift. In addition the channels may accommodate means for securing the lifting device to the tines of a forklift. An upper surface **2** of the device **24,** may be arched to attach to the top of cross-members **6,** of which there may be one or more, for example five cross-members **6** as illustrated in **FIG. 5.** The upper surface **2** may overlap onto the outside surface of the channels **1** (see also **FIG. 14** illustrating overlap portion to attach to channel). This overlap of surface **2** onto channels **1** as well as surface **2** attached to cross-member **6** helps provide stiffness to the lifting device **24.** The device **24** may include device member **3,** of which there may be two for the device **24,** (see also **FIG. 10**). End member **4** as illustrated, of which there may be two on either end of the device **24,** (see also **FIG. 9**) is suitable for attaching the device **24** to cables for use with a crane. Device member **3** and end member **4** are attached to a longitudinal central member **5.** Cross-members **6,** illustrated in **FIG. 8** and **FIG. 12,** of which there may be one or more, has an upper edge that meets upper surface **2.** A half-pipe 7, for example a schedule 40 pipe split lengthwise, may be attached to the outer surfaces of channels **1** to provide protection to the interior surfaces of coiled pipe so as to protect the pipe material from angled surfaces on the lifting device **24** (see also **FIG. 16**). Likewise, on one or either end of upper surface **2,** a round bar **8,** for example a 1/4 inch or similar appropriate size, may be attached along the arcuate edge that will also provide sharp-edge protection to the pipe material to be moved with the lifting device **24** and is further illustrated in **FIG 15.**

[0021] In certain illustrative embodiments, lifting device **24** can be formed of steel or other metal material. In certain illustrative embodiments the lifting devices are capable of a 20 ton rating, or for a rated load of 40,000 lbs.

[0022] Lifting device **24** supporting various diameter coils, is illustrated in cross-section with **FIG. 6. FIG. 7** illustrates another cross-sectional view showing the spacing between the cross-members **6. FIG. 8** illustrates still another cross-sectional view through lifting device **24** showing cross member **6,** central member **5** and channels **1. FIG. 9** illustrates two views of end-member **4. FIG. 10** illustrates further detail of device member **3. FIG. 11** illustrates the positions of end-member **4** attached to device-member **3** shown attached to central member **5. FIG. 12** illustrates a cross-member **6. FIG. 13** illustrates a side view of upper surface **2. FIG. 14** is cross section of upper surface **2.**

[0023] **FIG. 15** illustrates the round bar **8** may be attached along the arcuate edge and may extend at least partially over channels **1. FIG. 16** illustrates half-pipe **7,** which may be a schedule 40 pipe (for example split in two pieces along the central axis) for attachment to the channel **1** or the channel **1** and the overlap portion of upper surface **2.**

[0024] In general a lifting device **24** is capable of use with various diameter coils without damaging the outside surfaces of the coils of pipe contacted by the long-sides of the lifting device **24** during movement by a forklift.

[0025] **FIGS. 17** and **18** illustrate perspective views of another embodiment of the pipe coil lifting device **24,** which may capable of a 34 ton rating, or for a rated load of 68,000 lbs. Elements in common with those shown in previous figures are labeled with the same reference numerals. As shown in **FIGS. 17** and **18,** the upper surface **2** comprises a first upper surface section **9** attached to a

first support **10** coupled to a first side of the central member **5,** and a second upper surface section **11** attached to a second support **12** coupled to a second side of the central member **5.** In other embodiments, the upper surface **2** may be configured as a single section or divided into more than two sections. The first and second sides of the central member **5** may be opposite from one another. In certain embodiments, the central member **5** may be configured as a single plate of steel or similar material. In further embodiments, the lifting device **24** may include a plurality of first supports **10** and a plurality of second supports **12** spaced apart from one another to provide support along the length of the lifting device **24.** In the illustrated embodiment, the lifting device **24** includes eight (8) first supports **10** and eight (8) second supports **12** with the first and eighth supports **10** and **12** serving as ends of the lifting device **24.**

[0026] In certain embodiments, a coating **13** may be applied to an outer surface of the upper surface **2.** For example, the coating **13** may be a rubberized coating, polymer, paint, sheet, or layer applied to the upper surface **2** and configured to provide a surface that will reduce the likelihood of damaging the interior channel **104** of the coil of pipe **102.** In further embodiments, the upper surface **2** may include curves **14** near the channels **1** to also reduce the likelihood of damaging the coil of pipe **102.** In such embodiments, the half-pipes **7** may be omitted.

[0027] In the illustrated embodiment of **FIGS. 17** and **18,** the central member **5** includes end members **4** suitable for attaching the lifting device **24** to cables for use with a crane. The end members **4** may be attached to the central member **5** or may be an integral or formed part of the central member **5.** Further, the channels **1** may be attached to lower surfaces **15** of the supports **10** and **12.**

[0028] In one nonlimiting embodiment a pipe coil lifting device comprises a superstructure with a central longitudinal member and at least one cross-member, with two channels at the outside long-edges of the superstructure attached to the cross-members, and a convex upper surface is attached to the cross-members of the superstructure.

[0029] In other aspects, the pipe coil lifting device upper surface is attached to and overlaps upon the outside surface of the channels. Further, the pipe coil lifting device may have a device member attached to the central member and an end member attached to the central member. The central longitudinal member may extend beyond the upper surface and comprise an end member suitable for attaching cable fittings. Half-pipes may be attached to the lateral outside surfaces of the channels. A 1/4 inch round bar may be attached to the arcuate edge of the convex upper surface.

[0030] In another nonlimiting embodiment, a pipe coil lifting device comprises a superstructure having a pair of longitudinal channel portions attached to and forming sides of an outermost portion of the superstructure. A longitudinal central member extends between the channel portions with the superstructure having at least one cross-member perpendicular and attached to the central member and channel portions. The top of the superstructure forms a convex upper surface attached to the channel portions, central member and cross-members.

[0031] In other aspects, the upper surface of the pipe coil lifting device overlaps upon the outside surface of the channel portions. A device member may be attached to the central member and an end member attached to the central member. The longitudinal central member may extend beyond the upper surface and comprise an end member for attaching cable fittings. Half-pipes may be attached to the lateral outside surfaces of the channel portions. A 1/4 inch round bar attached to the arcuate edge of the convex upper surface.

[0032] In still another nonlimiting embodiment, a method is provided for lifting a pipe coil the method comprising lifting a coil of flexible pipe with a pipe coil lifting device disposed on a forklift, the pipe coil lifting device comprising a superstructure with a central member and at least one cross-member perpendicular to the cross member, with two channels at the outside long-edges of the superstructure, with a convex surface attached to the cross-members of the superstructure. When using the lifting device with a forklift, a hydraulic side-shift function of the forklift may be used to secure the lifting device to the tines of the forklift. Alternatively, the lifting device may be attached for moving a pipe coil with a crane using a cable or chain attached to end members of the central member of the device.

[0033] While the present disclosure has been described with respect to a limited number of embodiments, for example lifting devices for coils with inside diameters of seven and nine feet, those skilled in the art, having benefit of this disclosure, will appreciate that other embodiments may be devised which do not depart from the scope of the disclosure as described herein. Accordingly, the scope of the disclosure should be limited only by the attached claims.

Claims

1. A pipe coil lifting device comprising: a superstructure having a pair of longitudinal channel portions attached to and forming sides of an outermost portion of the superstructure, a longitudinal central member extending between the channel portions having at least two supports perpendicular and attached to opposite sides of the longitudinal central member and channel portions, and wherein the top of the superstructure forms a convex upper surface attached to the channel portions, central member and supports.

2. The pipe coil lifting device of claim 1, wherein the upper surface comprises:

   a first upper surface section attached to a first

support coupled to a first side of the central longitudinal member; and
a second upper surface section attached to a second support coupled to a second side of the central longitudinal member.

3. The pipe coil lifting device of claim 1 or 2, wherein the longitudinal central member comprises end members at opposite ends of the longitudinal central member.

4. The pipe coil lifting device of at least one of the preceding claims, wherein the upper surface overlaps upon the outside surface of the channel portions.

5. The pipe coil lifting device of at least one of the preceding claims, comprising a coating applied to an outer surface of the convex upper surface.

6. The pipe coil lifting device of at least one of the preceding claims, wherein the channel portions are coupled to lower surfaces of the at least two supports.

7. A method for lifting a pipe coil comprising: lifting a coil of flexible pipe with a pipe coil lifting device, the pipe coil lifting device comprising a superstructure having a pair of longitudinal channel portions attached to and forming sides of an outermost portion of the superstructure, a longitudinal central member extending between the channel portions having at least two supports perpendicular and attached to opposite sides of the longitudinal central member and channel portions, and wherein the top of the superstructure forms a convex upper surface attached to the channel portions, central member and supports.

8. The method of claim 7, wherein the convex surface comprises:

a first upper surface section attached to a first support coupled to a first side of the central member; and
a second upper surface section attached to a second support coupled to a second side of the central member.

9. The method of claim 7 or 8, wherein the longitudinal central member comprises end members at opposite ends of the longitudinal central member.

10. The method of claim 9, wherein the pipe coil lifting device is attached by a cable to the end members.

11. The method of claim 10, wherein the pipe coil lifting device is attached by the cable to a crane for moving the coil of flexible pipe.

12. The method of at least one of claims 7 to 11, wherein the pipe coil lifting device is mounted on a forklift.

13. The method of claim 12, wherein the pipe coil lifting device is secured to channels of the forklift by hydraulic force applied to forklift tines.

14. The method of at least one of claims 7 to 13, comprising a coating applied to an outer surface of the convex surface.

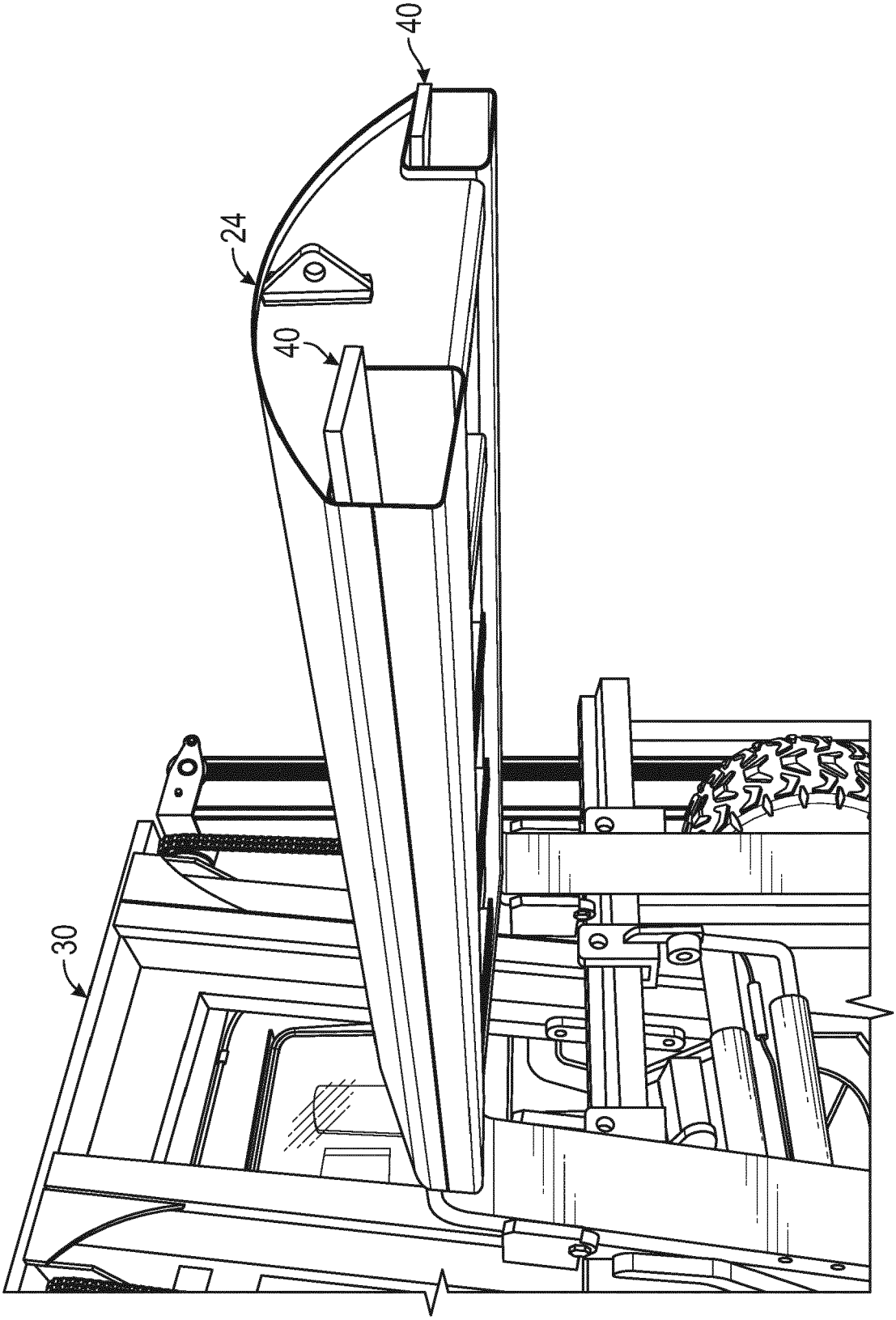

FIG. 1

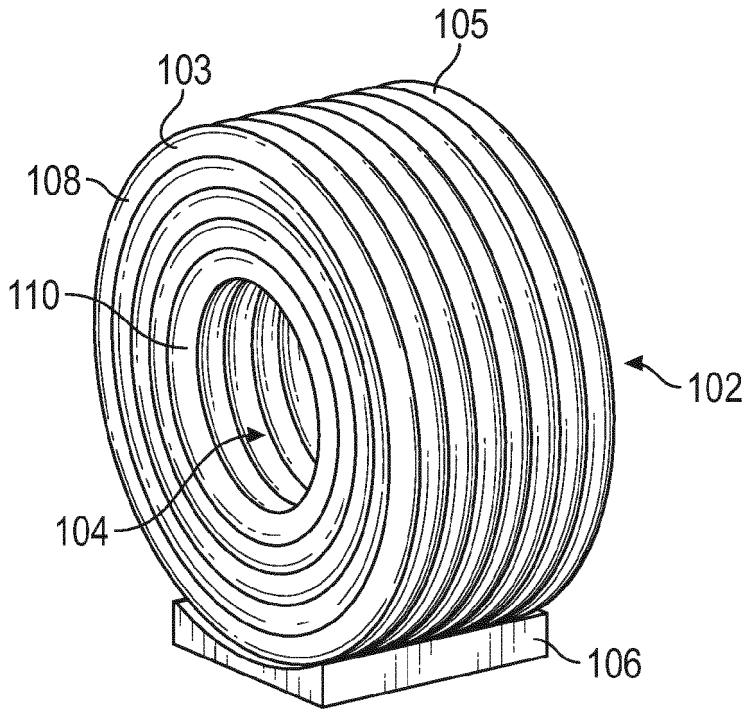

FIG. 2

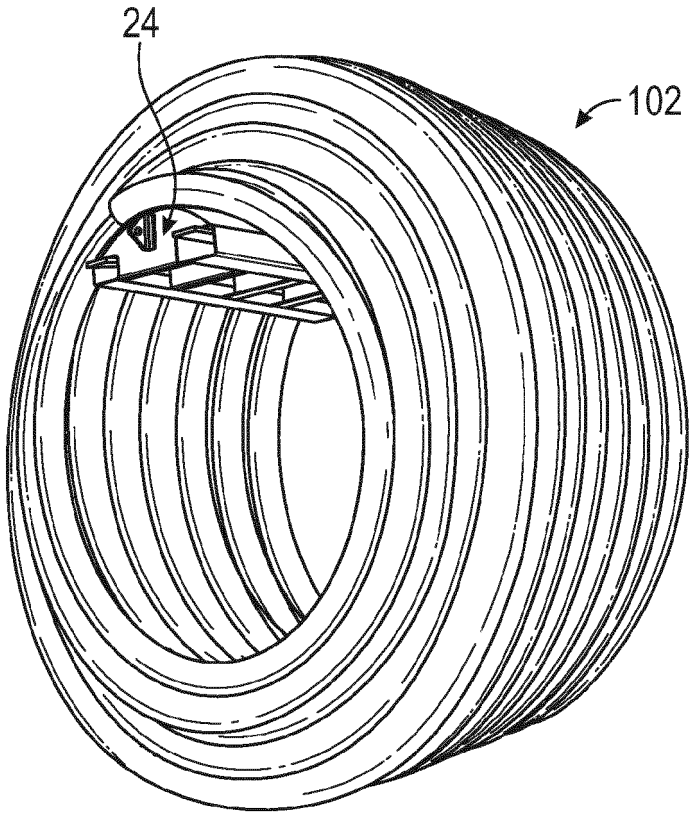

FIG. 3

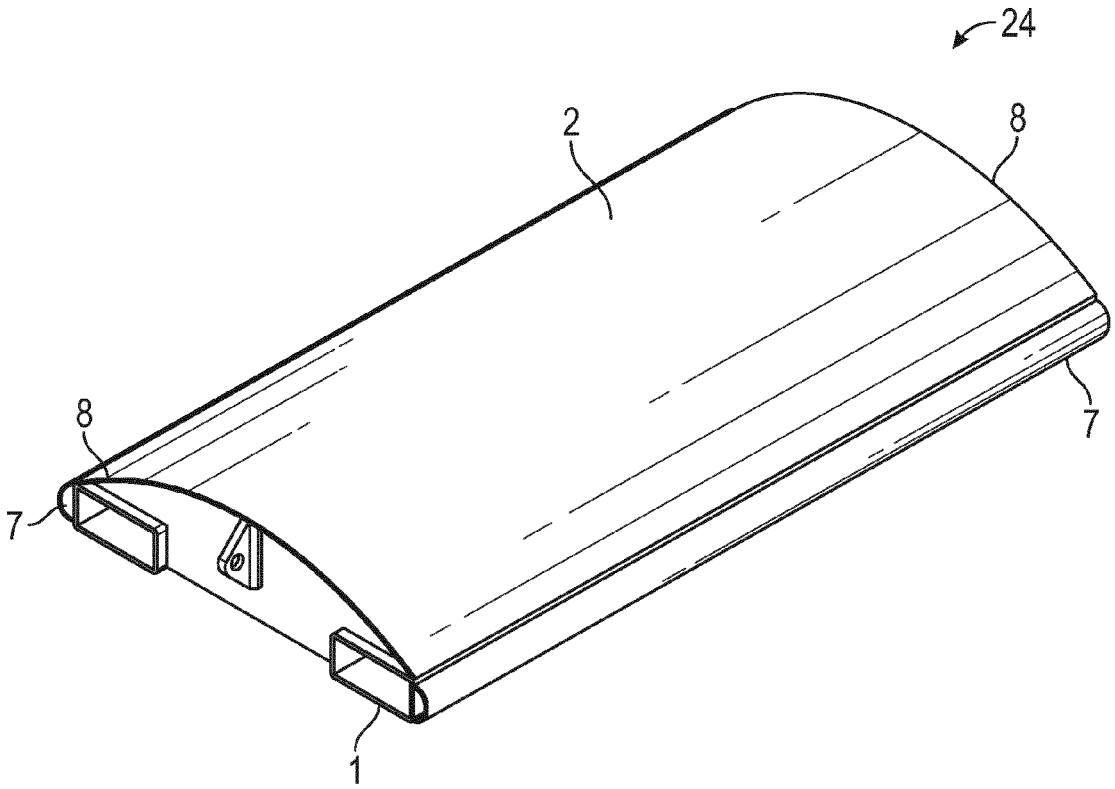

FIG. 4

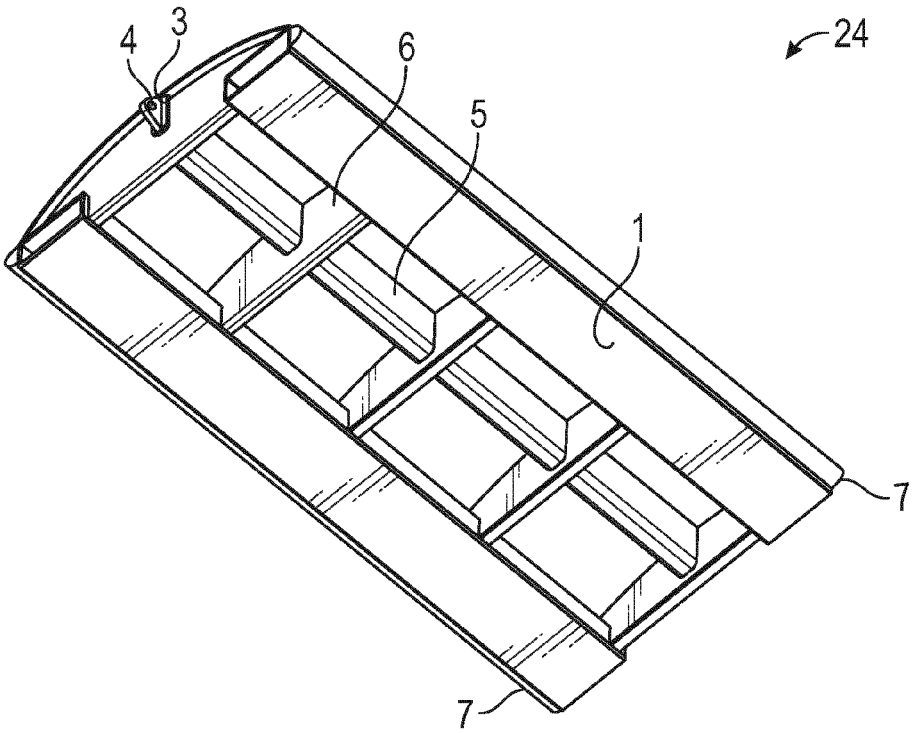

FIG. 5

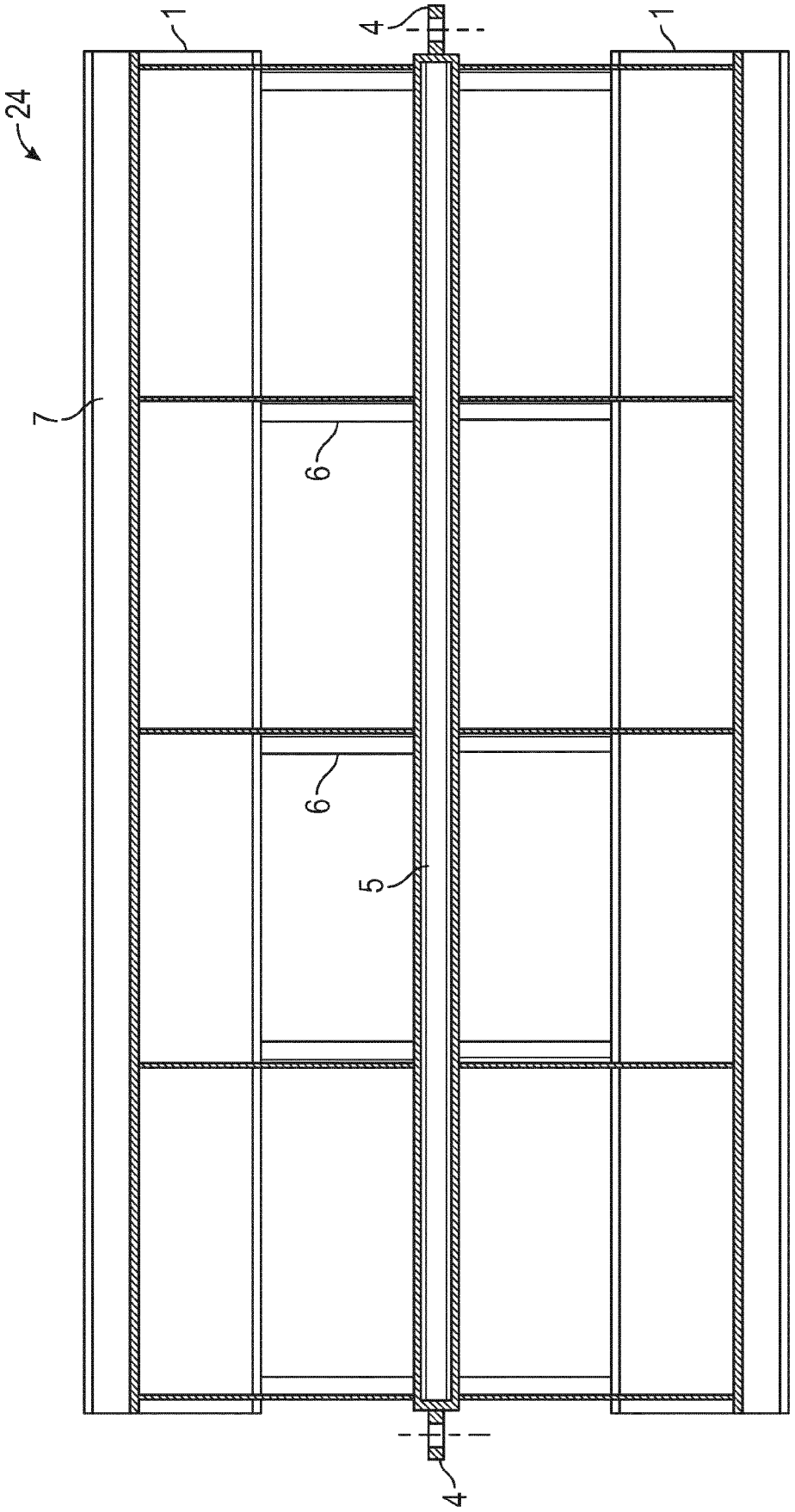

FIG. 6

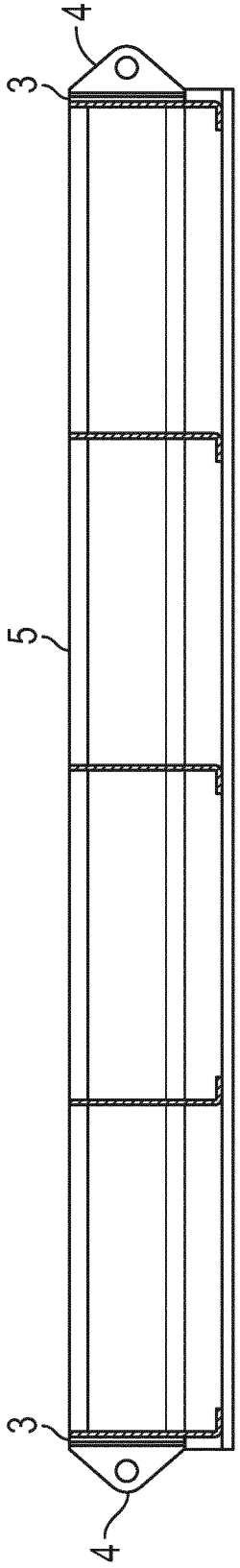

FIG. 7

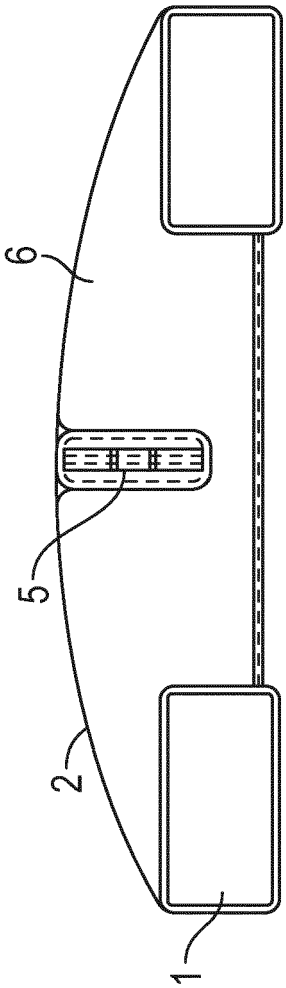

FIG. 8

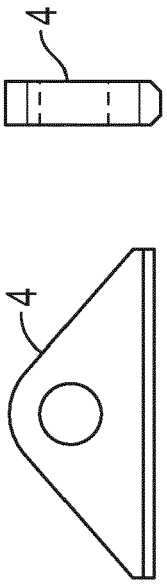

FIG. 9

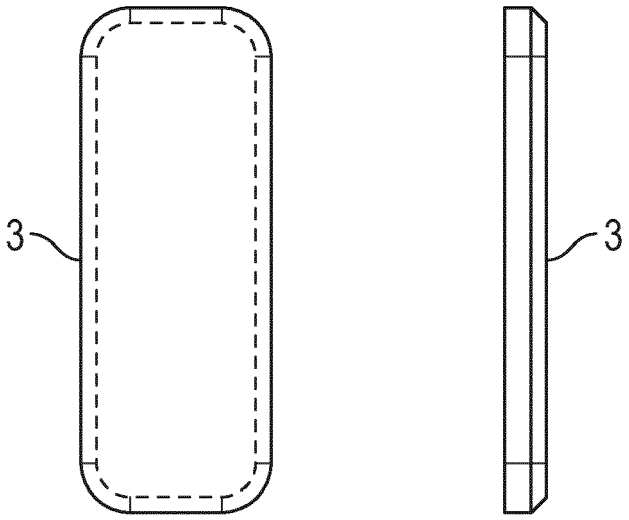

FIG. 10

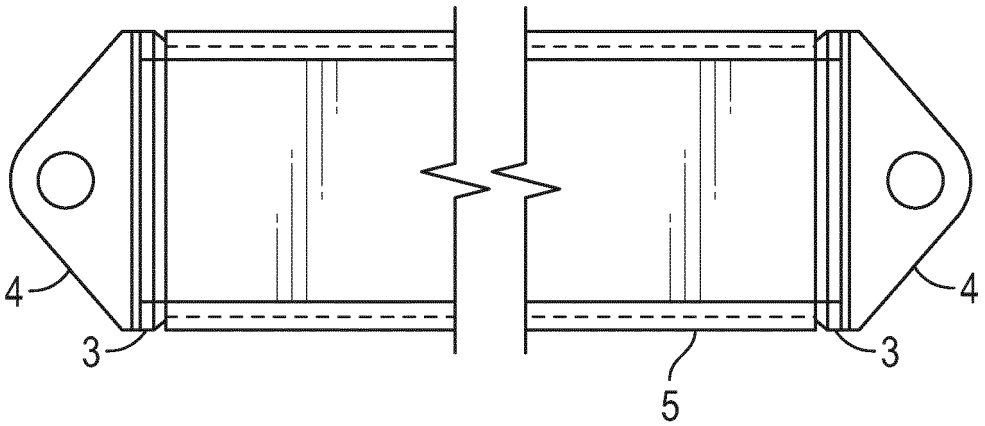

FIG. 11

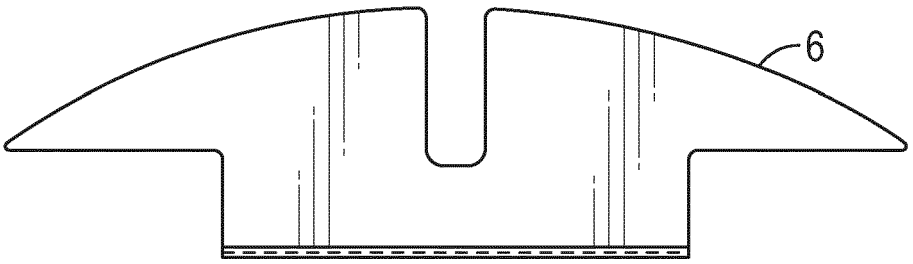

FIG. 12

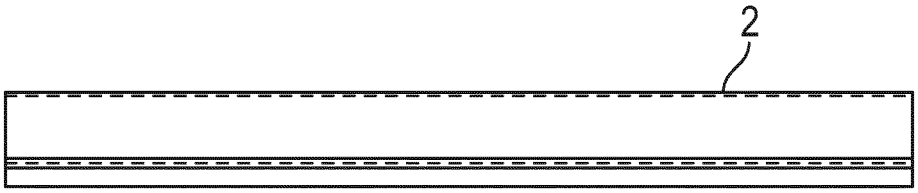

FIG. 13

FIG. 14

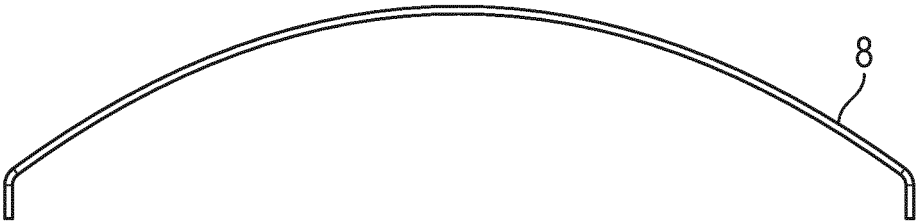

FIG. 15

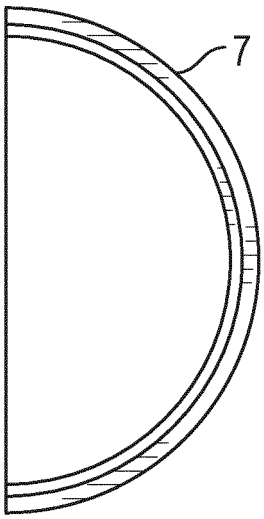

FIG. 16

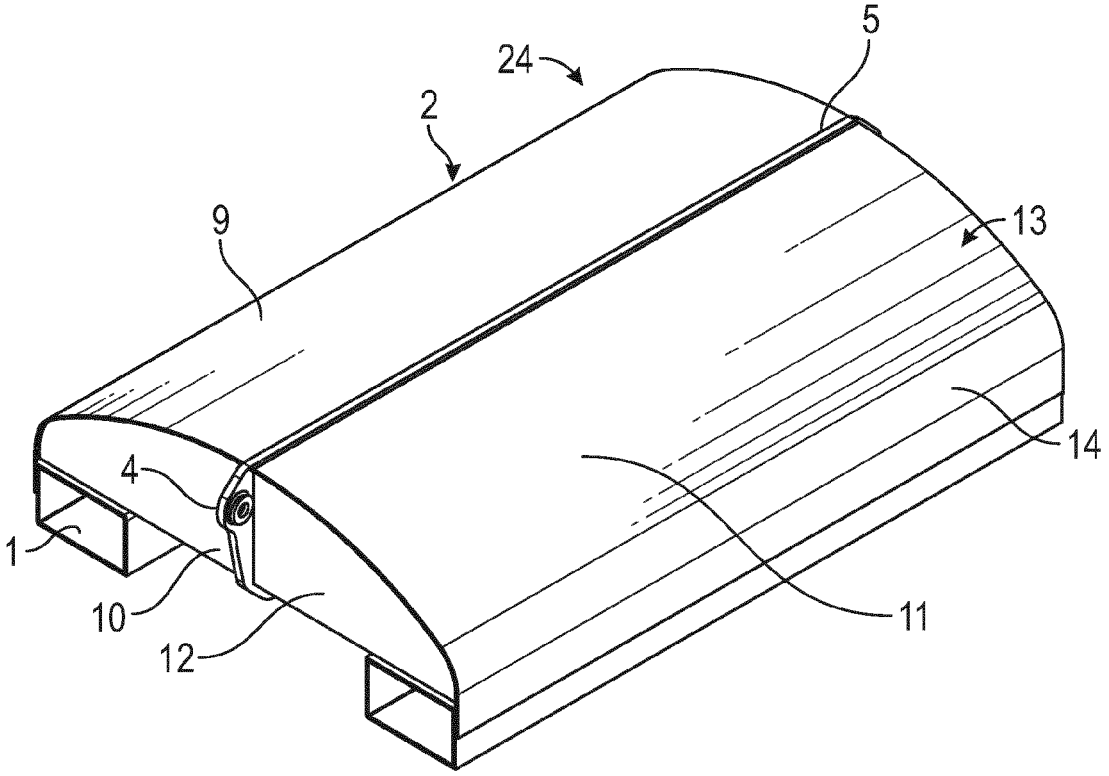

FIG. 17

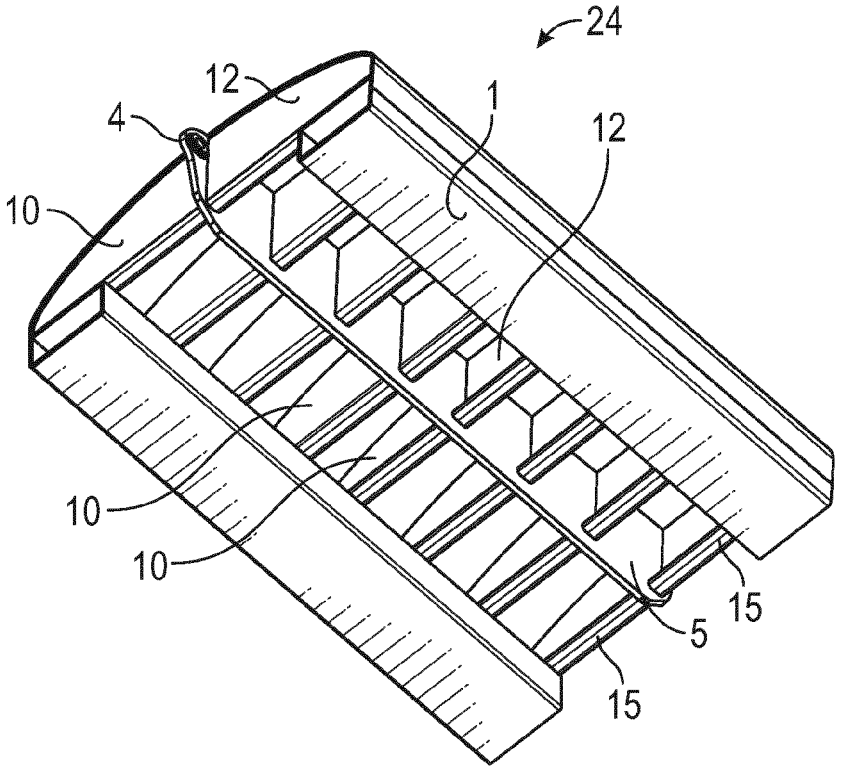

FIG. 18

Europäisches Patentamt
European Patent Office
Office européen des brevets

EUROPEAN SEARCH REPORT

Application Number
EP 19 19 8997

DOCUMENTS CONSIDERED TO BE RELEVANT

Category	Citation of document with indication, where appropriate, of relevant passages	Relevant to claim	CLASSIFICATION OF THE APPLICATION (IPC)
X Y	WO 2018/005296 A1 (FLEXSTEEL PIPELINE TECH INC [US]) 4 January 2018 (2018-01-04) * the whole document *	1-4,6-13 5,14	INV. B66F9/18
X	CN 204 237 520 U (ANHUI JINGCHENG COPPER CO LTD) 1 April 2015 (2015-04-01) * the whole document *	1,2,5,7, 8,14	
Y	CN 106 081 311 B (WANG MAO) 14 September 2018 (2018-09-14) * the whole document *	5,14	
A	US 5 809 907 A (BUMGARNER TIM [US]) 22 September 1998 (1998-09-22) * column 2, line 66 - line 67; figure 11 *	5,14	

TECHNICAL FIELDS SEARCHED (IPC)

B66F

The present search report has been drawn up for all claims

Place of search	Date of completion of the search	Examiner
The Hague	13 February 2020	Popescu, Alexandru

CATEGORY OF CITED DOCUMENTS

X : particularly relevant if taken alone
Y : particularly relevant if combined with another document of the same category
A : technological background
O : non-written disclosure
P : intermediate document

T : theory or principle underlying the invention
E : earlier patent document, but published on, or after the filing date
D : document cited in the application
L : document cited for other reasons
.....
& : member of the same patent family, corresponding document

1

EPO FORM 1503 03.82 (P04C01)

ANNEX TO THE EUROPEAN SEARCH REPORT ON EUROPEAN PATENT APPLICATION NO. EP 19 19 8997

This annex lists the patent family members relating to the patent documents cited in the above-mentioned European search report.
The members are as contained in the European Patent Office EDP file on
The European Patent Office is in no way liable for these particulars which are merely given for the purpose of information.

13-02-2020

Patent document cited in search report	Publication date	Patent family member(s)	Publication date
WO 2018005296 A1	04-01-2018	AU 2017288912 A1	03-01-2019
		BR 112018076786 A2	26-03-2019
		CA 3040742 A1	04-01-2018
		CN 109562424 A	02-04-2019
		CO 2019000685 A2	08-02-2019
		EA 201990121 A1	31-05-2019
		EP 3475006 A1	01-05-2019
		SG 11201811127T A	30-01-2019
		US 2018222733 A1	09-08-2018
		WO 2018005296 A1	04-01-2018
CN 204237520 U	01-04-2015	NONE	
CN 106081311 B	14-09-2018	NONE	
US 5809907 A	22-09-1998	NONE	

EPO FORM P0459

For more details about this annex : see Official Journal of the European Patent Office, No. 12/82