(19) Europäisches Patentamt
European Patent Office
Office européen des brevets

(11) EP 3 715 724 A1

(12) EUROPEAN PATENT APPLICATION

(43) Date of publication:
30.09.2020 Bulletin 2020/40

(51) Int Cl.:
F24C 15/00 (2006.01) *F24C 15/16* (2006.01)

(21) Application number: **20165400.1**

(22) Date of filing: **24.03.2020**

(84) Designated Contracting States:
AL AT BE BG CH CY CZ DE DK EE ES FI FR GB GR HR HU IE IS IT LI LT LU LV MC MK MT NL NO PL PT RO RS SE SI SK SM TR
Designated Extension States:
BA ME
Designated Validation States:
KH MA MD TN

(30) Priority: **25.03.2019 IT 201900004291**

(71) Applicant: **SMEG S.p.A.**
42016 Guastalla, RE (IT)

(72) Inventors:
- **DALL'OGLIO, Alberto**
46029 SUZZARA (MN) (IT)
- **MASTILOVIC, Nebojsa**
42023 CADELBOSCO DI SOPRA (RE) (IT)

(74) Representative: **Martini, Gabriele et al**
Studio Torta S.p.A.
Via Viotti, 9
10121 Torino (IT)

(54) **AN OVEN MUFFLE EQUIPPED WITH A LIGHTING DEVICE FOR ILLUMINATING THE COOKING CHAMBER**

(57) An oven muffle defining a cooking chamber, wherein the muffle comprises: a back wall, a roof wall, a floor wall and two lateral walls; at least one lighting device configured for illuminating the cooking chamber; supporting devices coupled to the lateral walls and configured for supporting oven shelves or lateral frames for supporting oven shelves for dividing the cooking chamber into sub-chambers; wherein the lighting device is positioned close to a supporting device, which is configured for partially shielding the lighting device.

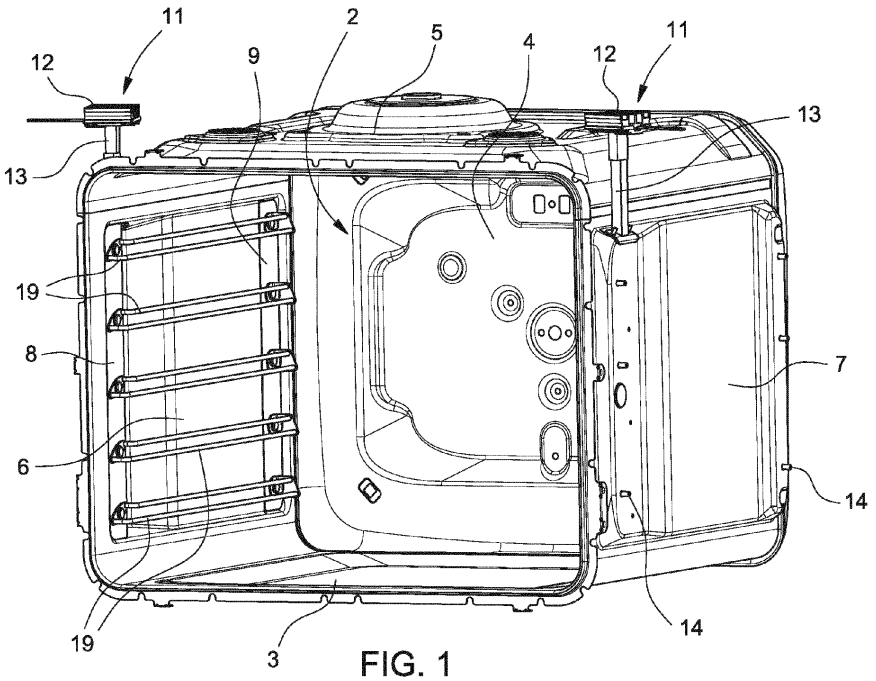

FIG. 1

EP 3 715 724 A1

Description

Cross-reference to related applications

[0001] This patent application claims priority from Italian patent application no. 102019000004291 filed on March 25, 2019.

Technical field

[0002] The present invention relates to an oven muffle. Therefore, the reference technical field of the present invention is that of ovens (domestic and industrial) for cooking or heating dishes. More specifically, the technical field of the present invention refers to oven muffles equipped with lighting devices capable of illuminating the cooking chamber so that a user can easily check the cooking or heating state of the dishes. The technical field of the present invention is not limited to a particular type of cooking of the dishes. In this sense, an oven according to the present invention can be an electric oven, a gas oven, a steam or humidified oven, a microwave oven, or a hybrid oven with various cooking modes.

State of the art

[0003] As is known, domestic or industrial ovens for cooking or heating dishes include a particular internal structure known in the sector as a muffle which defines the cooking chamber. Outside the muffle there is an external frame and between the muffle and this external frame there are all the devices designed for the correct operation of the oven. The muffle comprises a plurality of walls, which are interconnected to each other or made directly in one piece. In particular, the muffle comprises a back wall, a roof wall, a floor wall, two lateral walls and a front door. As is known, the door is movable (usually hinged to a lateral wall) between a first position, in which it closes the cooking chamber to reduce the dispersion of the cooking heat, and a second position in which it allows the user to access the cooking chamber. The lateral walls of the muffle include supports or guides configured to support at least one shelf for dividing the cooking chamber into sub-chambers. As is known, these shelves allow several dishes to be cooked at the same time or the dishes to be brought closer to the roof wall where, for example, there may be an electric resistance for particular types of cooking. The supporting devices for the shelves can be made in the form of protruding ribs or parallel grooves placed one above the other along the lateral walls from the floor to the roof of the cooking chamber.

[0004] Starting from this known structure, muffles equipped with lighting devices configured for illuminating the cooking chamber are now available on the market, so that a user can easily check the cooking or heating state of the dishes. A first example of these muffles provides for the presence of a light source in the area of the roof of the cooking chamber. However, this solution is not optimal because, if a shelf is present in the oven, it is not able to illuminate dishes placed under a shelf, for example on a lower shelf or on the floor wall of the muffle. Today there is therefore a need to equip the muffle with lighting devices configured so as to be able to illuminate the dishes regardless of the number of shelves in the oven and of the position of the shelf inside the cooking chamber.

[0005] A first available solution for this purpose, for example, is described in DE102006061793. In fact, this document describes a muffle wherein each shelf is provided with a dedicated light source in the form of a horizontal light guide supported on a special support coupled to the lateral wall of the cooking chamber. However, this solution is not particularly advantageous in view of the high number of components used for lighting.

[0006] A second example of a muffle with lighting devices configured to illuminate all the shelves is described in EP2746676. According to the teachings of this document, it is possible to provide a single vertical light guide coupled to a lateral wall of the muffle which extends from the floor to the roof wall of the cooking chamber. Advantageously, this vertical light guide extends over the entire height of the cooking chamber, and therefore with a single light source (for example, a LED) coupled to one of its ends it is possible to illuminate all the shelves in the oven. According to EP2746676, the vertical light guide is supported, in the area of the lateral walls, by a special support equipped with reflective elements or can be supported by a special vertical recess in the lateral wall of the muffle. EP2746676 also addresses the problem of correctly conveying the light emitted by the vertical light guide and preventing glare for the user. The solution proposed in this document is to make particular surface processing in some portions of the vertical light guide so as to allow the emission of light at these surface-processed portions. Even this solution described in EP2746676, although it actually reduces the devices in the muffle for lighting the cooking chamber, is not without drawbacks. In fact, on the one hand, the presence of special devices solely intended to support the vertical light guides are however additional elements to be provided in the cooking chamber, and on the other hand, the surface processing for partially shielding the light guides makes this solution not advantageous economically.

Description of the invention

[0007] Starting from this prior art, it is an object of the present invention to provide an oven muffle equipped with lighting devices for illuminating the cooking chamber, which is capable of overcoming the above-mentioned drawbacks of the prior art. In particular, the main object of the present invention is to provide a muffle equipped with lighting devices wherein all the shelves in the oven can be illuminated with a few simple components.

[0008] In accordance with these objects, the present invention relates to an innovative oven muffle, wherein this muffle defines a cooking chamber and comprises:

- a back wall, a roof wall, a floor wall, two lateral walls, and optionally a door hinged to a lateral wall;
- at least one lighting device configured for illuminating the cooking chamber;
- supporting devices coupled to the lateral walls and configured for supporting at least one oven shelf for dividing the cooking chamber into sub-chambers or special lateral frames which in turn support (and possibly also guide) the shelves. In the following, the term 'device for supporting the shelves' will therefore refer to both a device that directly supports the shelves and a device that supports the frames which in turn support the shelves.

[0009] Starting from this configuration, known per se, the main aspect of the present invention is the interaction between one of the devices for supporting the shelves and the lighting device, where interaction means their mutual positioning inside the cooking chamber, and preferably also particular profiles of some portions of these elements. In particular, according to the main aspect of the present invention, the lighting device is positioned close to a supporting device, which is configured for partially shielding the light emitted by the lighting device.

[0010] Advantageously, therefore, according to the present invention, two functions now delegated to two distinct components, namely the structural function of supporting the shelves and the optical function of partially shielding the light emitted by the lighting device, are synergistically combined in a single component.

[0011] According to the general aspect of the present invention, the supporting devices can be made in any shape as long as they are capable of performing the aforementioned dual function, and the lighting device can also be of any type. However, the attached figures will describe a particularly advantageous embodiment of the invention wherein the number of components used is reduced.

[0012] According to one embodiment of the invention, the device for supporting the shelves, which also houses the lighting device, is configured to shield the light emitted towards the muffle door, or generally towards a user who intends to observe the inside of the cooking chamber from the outside.

[0013] Advantageously, in this way, again with a single component, the glare for the user is prevented in a simple and inexpensive way without requiring particular surface processing of the lighting device.

[0014] Preferably, for each lateral wall, the muffle comprises a front supporting device opposite the back wall and close to the door, and a rear supporting device close to the back wall. In this embodiment, the support configured to shield the light emitted by the lighting device is one of the two front supporting devices.

[0015] Preferably, the muffle comprises two lighting devices, each of which is associated with a front supporting device in the manner provided according to the present invention. The rear supporting devices can be the same as or different from the front ones. In fact, for economy of scale, the rear supporting devices can be identical to the front ones. However, their retracted position would make it difficult to prevent glare for the user if the lighting devices were housed therein, and therefore usually the rear supporting devices only have the structural function of supporting the shelves.

[0016] According to a preferred embodiment, the devices for supporting the shelves are made in the form of uprights or vertical supports. Preferably, the uprights extend substantially over the entire height of the cooking chamber from the floor wall to the roof wall, so as to guarantee cooperation with lighting devices capable of illuminating all the shelves that may be present.

[0017] According to a preferred embodiment of the invention, the uprights supporting the shelves are a substantially cylindrical body made of an electrically insulating material.

[0018] According to one embodiment, the lighting device comprises a cylindrical light guide extending along the entire vertical length of the respective supporting device. For the purposes of the present invention, the term cylindrical refers to a body with surfaces defined by parallel generators regardless of the cross section of the body itself. For example, in this embodiment, the light emitted by the light guide is introduced into it by at least one LED located outside the muffle as described in EP2746676. This solution is extremely advantageous because it cuts down to one the number of lighting devices for illuminating all the shelves.

[0019] Preferably, each front supporting device comprises a cylindrical body with a first wall contacting the respective lateral wall of the muffle and a second wall opposite the first and configured to support shelves, or lateral frames for supporting shelves. In this case, the light guide (or the lighting device in general) is positioned in the cooking chamber at a distance from the lateral wall less than the distance from the second wall, so as to be entirely contained in the projection of the body of the front supporting device towards the back wall of the muffle.

[0020] Even more preferably, the front supporting device comprises a lip portion extending from the second wall towards the back wall beyond the body of the upright. In this case, the light guide (or the lighting device in general) is positioned in the cooking chamber so that the projection of the lip on the lateral wall of the muffle intersects at least part of said light guide.

[0021] Of course, this type of lighting device can also be independent of the section a of the upright, meaning that the upright can have other shapes (for example, it may have a real seat for housing different lighting devices), or vice versa, the lighting device can be a single vertical cylindrical light guide that cooperates with differently shaped supporting devices (provided they are al-

ways able to shield part of the light emitted).

[0022] As described above, according to the main aspect of the invention, the front supporting devices have not only a shielding function but also the (original) structural function of supporting the shelves or the shelf-supporting frames. According to the example which will be described in the part relating to the description of a preferred embodiment of the invention, in order to perform this structural function, the front uprights (as well as the rear ones) comprise, along their vertical length, a plurality of mushroom-shaped point protrusions configured to be coupled to one end of a shelf-supporting frame equipped with a corresponding slotted seat. In this way, the frames can be easily removed for cleaning reasons or in order to possibly equip the muffle with different frames, for example telescopic frames, if required.

[0023] Lastly, it is possible to provide a recess in the lateral walls of the muffle in the area of the supporting devices or in the whole wall, so that said supporting devices are flush with this recess and do not take up room in the cooking chamber.

Brief Description of the Drawings

[0024] Further features and advantages of the present invention will be apparent from the following description of a non-limiting embodiment thereof, with reference to the figures of the accompanying drawings, wherein:

- Figure 1 is a schematic view of an embodiment of a muffle according to the present invention;
- Figures 2 and 3 are perspective views of a component of the muffle in Figure 1, in particular of a device for supporting shelves or of frames for supporting shelves for dividing the cooking chamber into sub-chambers;
- Figure 4 is a sectional view of the supporting device in Figures 2 and 3;
- Figure 5 is a perspective view of an assembly according to the present invention formed by the supporting device of Figures 2 and 3 and a light guide;
- Figure 6 is a sectional view of the assembly in Figure 5.

Description of one embodiment of the invention

[0025] With reference to the accompanying figures, Figure 1 shows a schematic view of an embodiment of an oven muffle 1 according to the present invention. As is known, the muffle 1 defines a cooking chamber 2 and comprises a plurality of walls. In particular, Figure 1 shows a floor wall 3, a back wall 4, a roof wall 5 and two lateral walls 6 and 7. The muffle 1 also comprises a door (not shown and usually hinged to a lateral wall) to selectively close and open the cooking chamber 2 with respect to the surrounding environment. The oven incorporating the muffle 1 comprises, in a known manner, an external frame that encases the muffle 1, and the devices for the correct operation of the oven are housed in the cavity between the muffle 1 and the frame. Since the present invention is independent of the type of cooking offered by the oven, the heating devices and the external frame encasing the muffle 1 are not shown on purpose in Figure 1. As shown, each lateral wall 6 and 7 is equipped with two uprights 8, 9, a front upright 8 at the door (not shown) and a rear upright 9 at the back wall 4 of the muffle 1, respectively. Both the uprights 8 and 9 of each lateral wall 6 and 7 extend vertically along substantially the entire height of the lateral wall 6 and 7 and act as supporting devices for a plurality of parallel frames which, in turn, support shelves for dividing the cooking chamber 2 into sub-chambers. Alternatively, the uprights 8 and 9 can be configured to directly support the shelves that divide the cooking chamber 2 into sub-chambers. The uprights 8 and 9 are coupled to the lateral walls in a known manner, for example by means of rivets or threaded couplings. This coupling is schematized by reference number 14. The muffle 1 in Figure 1 comprises two lighting devices 11 wherein each of these devices 11 comprises a LED light source 12 and a cylindrical light guide 13 (i.e. in the form of a rectangular-section parallelepiped). As can be seen, the LEDs 12 are located outside the cooking chamber 2 at a first end of the light guide 13. According to the embodiment in Figure 1, the lateral walls 6 and 7 have a recess towards the outside with respect to the cooking chamber 2 and the roof 5 so that, in its vertical movement, the light guide 13 has a first section external to the cooking chamber 2 (where the LED 12 is present) and a section internal to the cooking chamber 2. As will become apparent from the subsequent figures, the main aspect of the present invention relates to the relative positioning of the light guide 13 with the respective front upright 8 inside the cooking chamber 2, as well as the particular profile of said front upright 8.

[0026] Figures 2 and 3 show perspective views of a front upright 8 supporting the front of the frames 19 for the shelves. As shown in these figures, the front upright 8 has a substantially constant section along its vertical length (i.e. from the floor to the roof of the muffle) and comprises a cylindrical body 21 provided with a first wall 15 for coupling to the respective lateral wall 6 of the muffle 1, and a second opposite wall 16 configured to (releasably) support the frames 19. As shown in Figure 3, the first wall 15 is equipped with a plurality of holes 17 arranged one after the other along the length of the upright 8 and configured to receive the above-mentioned rivets or threads 14 passing through the lateral walls of the muffle. As shown in Figure 2, the second wall 16 is a flat surface, in use parallel to the lateral wall 6, equipped with a plurality of mushroom-shaped point protrusions 18 arranged one after the other along the length of the upright 8. These protrusions 18 are configured to be coupled to respective slotted seats obtained in the front end of the frames 19. This coupling is known per se and occurs by providing an inverted U-shaped seat at the front end of

the frames 19 configured to be fitted by sliding on the respective protrusion 18 which, for this purpose, is in the shape of a mushroom.

[0027] Figure 4 shows a top view of the upright 8, i.e. a view along the arrow F of Figure 2. As shown in Figure 4, when the upright 8 is associated with the respective wall 6 of the muffle 1, the second wall 16 is parallel to the lateral wall 6 of the muffle 1 and is at a distance D from the wall 6 of the muffle at least equal to the thickness of the body 21 of the upright 8. Furthermore, Figure 4 shows that the second wall 16 has a lip extension 20 or a protruding portion with respect to the body 21 in the direction transverse to the length of the upright 8 towards the back wall 4 of the muffle 1. The following will show that the upright 8 and the aforementioned lip portion 20 collaborate with the light guide 13 in order to at least partially shield the light emitted by said light guide 13.

[0028] Figures 5 and 6 show the mutual positioning of the light guide 13 with respect to the upright 8 according to the present invention. In particular, Figures 5 and 6, respectively, show a perspective view and a sectional view of the mutual positioning of the light guide 13 with respect to the upright 8. This example clearly shows that, according to the present invention, the lighting device 11 is arranged close to the upright 8 which is configured to shield at least part of the light emitted by the light guide, in particular the light directed towards the opening of the muffle 1. According to the example shown in Figure 6, the light guide 13 is positioned in the cooking chamber 2 in a position such that it is located in a space between the lateral wall 6 and the extension of the second surface 16 of the upright 8 towards the back wall 4 of the muffle 1. In other words, the light guide 13 is at a distance from the lateral wall 6 of the muffle 1 less than the distance D which separates the same lateral wall 6 of the muffle 1 from the second wall 16 of the upright 8. Therefore, in this example, the light guide 13 is entirely inside the projection of the upright 8 on the back wall of the muffle. Furthermore, as mentioned in the general description of the invention, the lighting device 11 is close to the supporting device 8. According to the example shown, this close positioning means positioning the light guide 13 in a position such that the projection P of the lip 20 on the lateral wall 6 at least partially intersects the light guide 13. According to the example shown, the positioning of the light guide 13 in the space between the lateral wall 6 of the muffle 1 and the second surface 16 of the upright 8 and the proximity of the light guide to said upright 8 (with particular reference to the lip 20) allow the technical effect (anti-glare for the user) to be reached in a simple way, without adding other elements in the cooking chamber and even in the absence of surface processing on the light guide 13. Finally, according to the example shown, the light guide 13 has a rectangular section with a short side facing the upright. In this embodiment, the long side opposite to that facing the lateral wall of the muffle 1 is inclined relative to the lateral wall of the muffle 1 towards the back wall. This further prevents glare for the user. The present invention does not set particular limits to the materials that can be used. A preferred example provides that the uprights are made of an electrically insulating material (for example alumina oxide) so that the oven can be used in microwave mode without the risk of generating electric discharges.

[0029] It appears that the upright of the example shown solves the problems of the prior art underlying the present invention. In fact, a single component installed in the cooking chamber performs both the structural function of supporting the shelves and the function of housing the lighting devices. The particular shape of the upright shields the light along the direction of the door to prevent glare for a user and conveys the light optimally towards the inside of the cooking chamber. The single vertical light guide allows all the shelves in the oven to be illuminated with a single device.

[0030] Lastly, it is clear that modifications and variations may be made to the invention described herein without departing from the scope of the appended claims.

Claims

1. An oven muffle (1) defining a cooking chamber (2), wherein the muffle (1) comprises:

   - a back wall (4), a roof wall (5), a floor wall (3) and two lateral walls (6, 7);
   - at least one lighting device (11) configured for illuminating the cooking chamber (2);
   - supporting devices (8, 9) coupled to the lateral walls (6, 7) and configured for supporting oven shelves or lateral frames (19) for supporting oven shelves for dividing the cooking chamber (2) into sub-chambers;

   characterised in that
   the lighting device (11) is positioned close to a supporting device (8), which is configured for shielding, at least partially, the lighting device (11).

2. The muffle as claimed in claim 1, wherein, for each lateral wall (6, 7), the muffle (1) comprises a front supporting device (8) opposite the back wall (4) and a rear supporting device (9) close to the back wall (4), the lighting device (11) being positioned close to a front supporting device (8) configured for shielding the light emitted by the lighting device (11) towards the outside of the cooking chamber (2).

3. The muffle as claimed in claim 2, wherein the muffle (1) comprises two lighting devices (11) respectively close to the two front supporting devices (8).

4. The muffle as claimed in claim 3, wherein each front supporting device (8) is made in the form of an upright extending substantially from the floor wall (3)

to the roof wall (5).

5. The muffle as claimed in claim 4, wherein the lighting device (11) comprises a cylindrical light guide (13) extending in parallel along the entire front supporting device (8).

6. The muffle as claimed in claim 5, wherein each front supporting device (8) comprises a first wall in contact with the respective lateral wall (6, 7), a second wall opposite the first wall and configured for supporting oven shelves or lateral frames for supporting oven shelves; the light guide (13) being positioned at a distance from the lateral wall (6, 7) less than the distance from the second wall.

7. The muffle as claimed in claim 6, wherein each front supporting device (8) comprises a lip portion extending from the second wall towards the back wall (4); the cylindrical light guide (13) being positioned so that the projection of the lip on the lateral wall (6, 7) intersects at least part of the light guide (13).

8. The muffle as claimed in any one of the foregoing claims, wherein the supporting devices (8, 9) are made of an electrically insulating material.

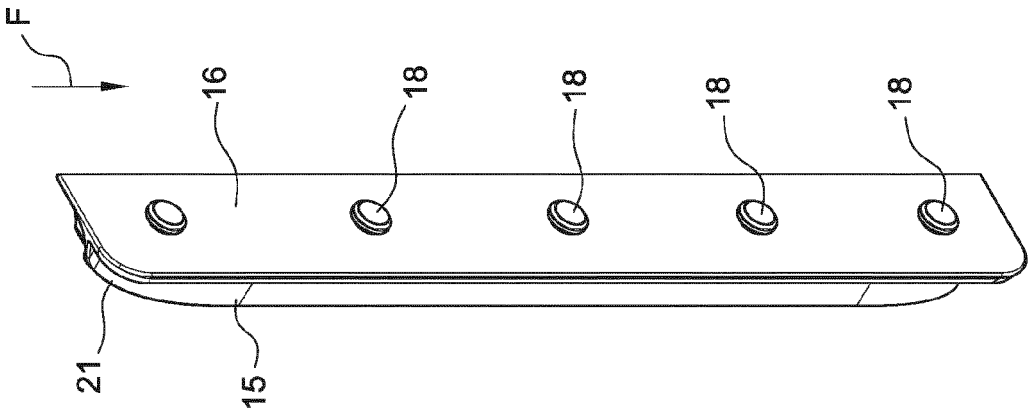

FIG. 2

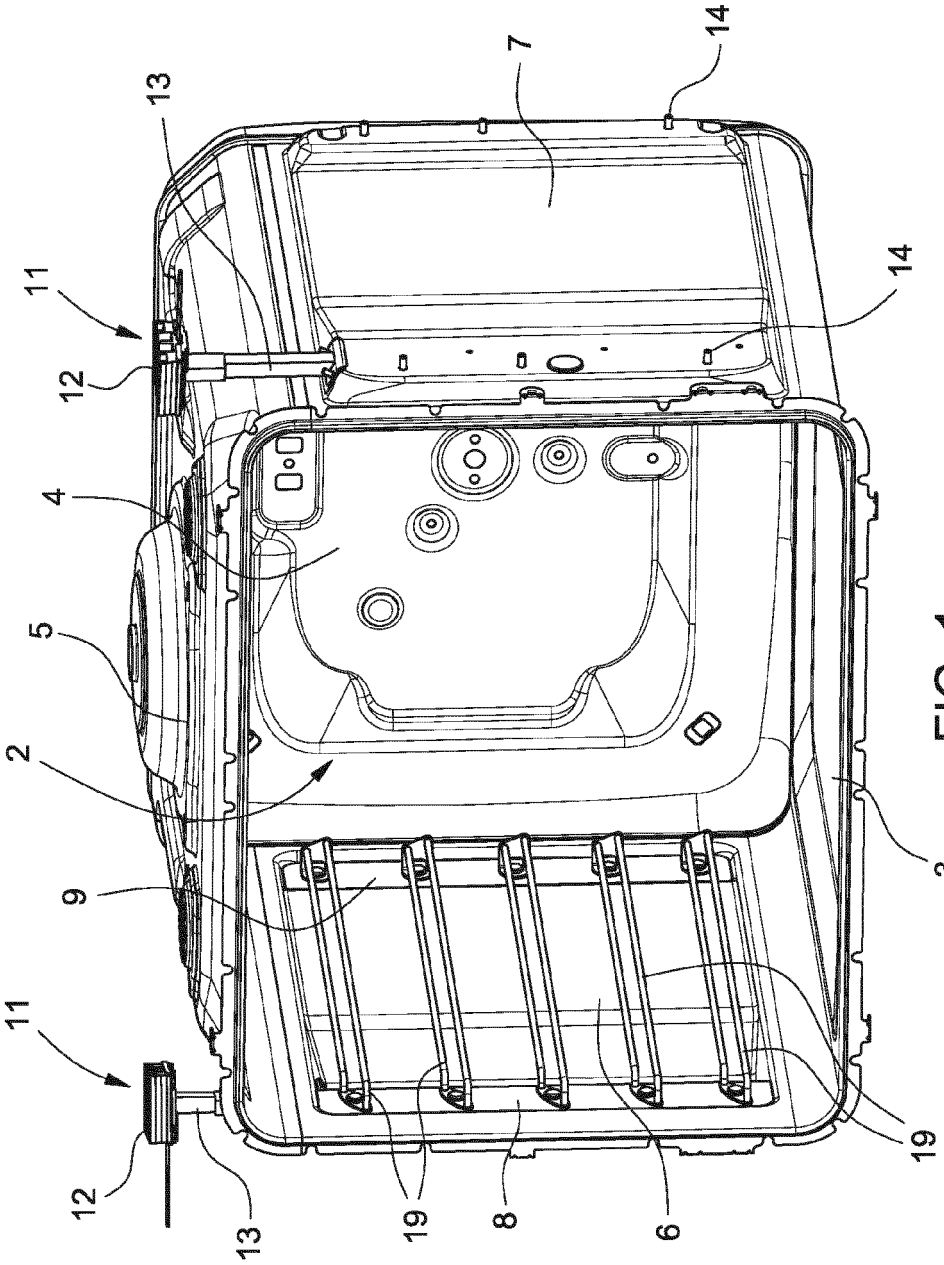

FIG. 1

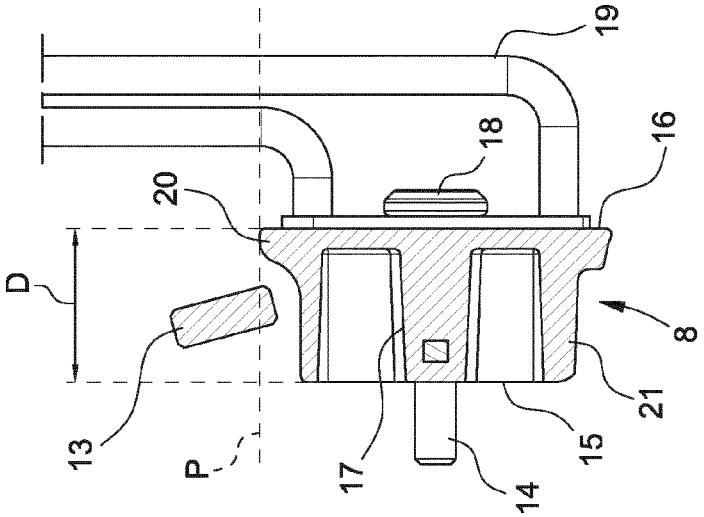

FIG. 6

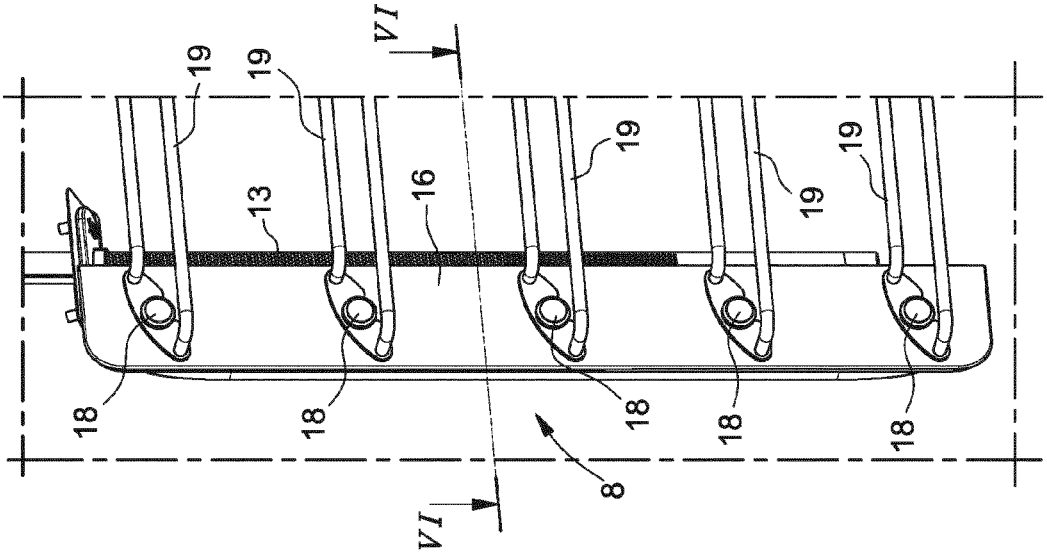

FIG. 5

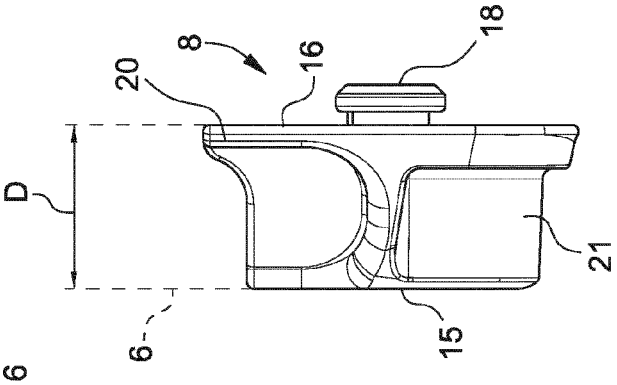

FIG. 4

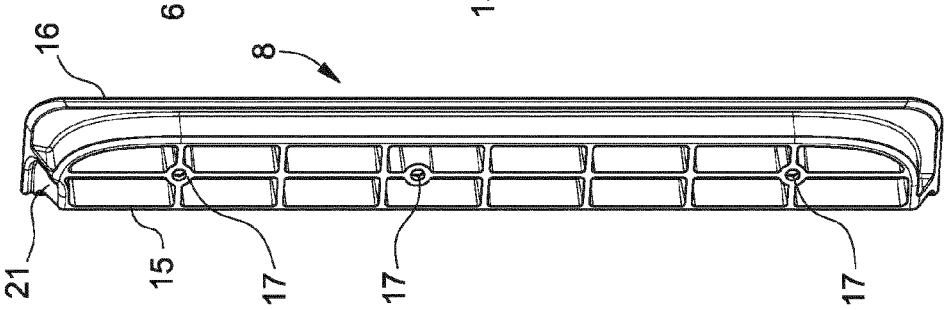

FIG. 3

Europäisches Patentamt
European Patent Office
Office européen des brevets

EUROPEAN SEARCH REPORT

Application Number
EP 20 16 5400

DOCUMENTS CONSIDERED TO BE RELEVANT

Category	Citation of document with indication, where appropriate, of relevant passages	Relevant to claim	CLASSIFICATION OF THE APPLICATION (IPC)
X	EP 3 153 780 A1 (MIELE & CIE [DE]) 12 April 2017 (2017-04-12) * paragraph [0036] - paragraph [0044]; figures *	1-8	INV. F24C15/00 F24C15/16
X	US 2016/320069 A1 (HETTINGER CHRISTOPHER LEE [US] ET AL) 3 November 2016 (2016-11-03) * paragraphs [0017] - [0032]; figures 1-4 *	1-8	
X	DE 10 2006 061739 A1 (BSH BOSCH SIEMENS HAUSGERAETE [DE]) 3 July 2008 (2008-07-03) * paragraph [0051]; figure 5 *	1-3	
X	EP 2 867 581 A1 (ILLINOIS TOOL WORKS [US]) 6 May 2015 (2015-05-06) * paragraphs [0010] - [0021]; figures *	1	
X	DE 10 2012 223465 A1 (BSH BOSCH UND SIEMENS HAUSGERÄTE GMBH [DE]) 18 June 2014 (2014-06-18) * paragraph [0029] - paragraph [0030]; figures 1,2 *	1	TECHNICAL FIELDS SEARCHED (IPC) F24C

The present search report has been drawn up for all claims

Place of search	Date of completion of the search	Examiner
The Hague	13 July 2020	Vigilante, Marco

CATEGORY OF CITED DOCUMENTS

X : particularly relevant if taken alone
Y : particularly relevant if combined with another document of the same category
A : technological background
O : non-written disclosure
P : intermediate document

T : theory or principle underlying the invention
E : earlier patent document, but published on, or after the filing date
D : document cited in the application
L : document cited for other reasons
& : member of the same patent family, corresponding document

EPO FORM 1503 03.82 (P04C01)

ANNEX TO THE EUROPEAN SEARCH REPORT ON EUROPEAN PATENT APPLICATION NO. EP 20 16 5400

This annex lists the patent family members relating to the patent documents cited in the above-mentioned European search report.
The members are as contained in the European Patent Office EDP file on
The European Patent Office is in no way liable for these particulars which are merely given for the purpose of information.

13-07-2020

Patent document cited in search report	Publication date	Patent family member(s)	Publication date
EP 3153780 A1	12-04-2017	DE 102015117192 A1	13-04-2017
		EP 3153780 A1	12-04-2017
		ES 2770715 T3	02-07-2020
US 2016320069 A1	03-11-2016	NONE	
DE 102006061739 A1	03-07-2008	NONE	
EP 2867581 A1	06-05-2015	EP 2867581 A1	06-05-2015
		ES 2614240 T3	30-05-2017
		PL 2867581 T3	30-06-2017
		WO 2014008265 A1	09-01-2014
DE 102012223465 A1	18-06-2014	NONE	

EPO FORM P0459

For more details about this annex : see Official Journal of the European Patent Office, No. 12/82

REFERENCES CITED IN THE DESCRIPTION

This list of references cited by the applicant is for the reader's convenience only. It does not form part of the European patent document. Even though great care has been taken in compiling the references, errors or omissions cannot be excluded and the EPO disclaims all liability in this regard.

Patent documents cited in the description

- IT 102019000004291 **[0001]**
- DE 102006061793 **[0005]**
- EP 2746676 A **[0006] [0018]**