(19) Europäisches Patentamt
European Patent Office
Office européen des brevets

(11) EP 3 783 162 B1

(12) **EUROPEAN PATENT SPECIFICATION**

(45) Date of publication and mention of the grant of the patent:
12.10.2022 Bulletin 2022/41

(21) Application number: **20155238.7**

(22) Date of filing: **03.02.2020**

(51) International Patent Classification (IPC):
E04D 13/03 *(2006.01)*

(52) Cooperative Patent Classification (CPC):
E04D 13/031; E04D 13/033

(54) **A SKYLIGHT WINDOW**

DACHFENSTER

LUCARNE DE TOIT

(84) Designated Contracting States:
AL AT BE BG CH CY CZ DE DK EE ES FI FR GB GR HR HU IE IS IT LI LT LU LV MC MK MT NL NO PL PT RO RS SE SI SK SM TR

(43) Date of publication of application:
24.02.2021 Bulletin 2021/08

(73) Proprietor: **VKR Holding A/S**
2970 Hørsholm (DK)

(72) Inventors:
- **Bertram, Jacob**
  2970 Hørsholm (DK)
- **Grønborg, Kristian Nitzsch**
  2970 Hørsholm (DK)
- **Kristensen, Lars**
  2970 Hørsholm (DK)
- **Østergaard, Iben Bjerre**
  2970 Hørsholm (DK)
- **Pedersen, Rasmus Klercke**
  2970 Hørsholm (DK)

(74) Representative: **AWA Denmark A/S**
Strandgade 56
1401 Copenhagen K (DK)

(56) References cited:
EP-A1- 3 101 195 **EP-A1- 3 199 718**
EP-A1- 3 396 100 **CN-U- 208 934 280**
US-A- 6 052 956 **US-B1- 6 202 373**
US-B2- 6 640 508

Note: Within nine months of the publication of the mention of the grant of the European patent in the European Patent Bulletin, any person may give notice to the European Patent Office of opposition to that patent, in accordance with the Implementing Regulations. Notice of opposition shall not be deemed to have been filed until the opposition fee has been paid. (Art. 99(1) European Patent Convention).

EP 3 783 162 B1

Description

[0001] The present invention relates to a skylight window for being installed in a roof of a building, the skylight window comprising:

a window frame having four frame side members,
a window sash having four sash side members supporting an insulating glazing unit (IGU) having multiple layers of glazing, said window sash being movable in relation to the window frame between an open and a closed position of the skylight window, and
a weather shield attached to the sash so as to protect a window portion of the skylight window, the window portion comprising the sash, frame and window pane,
a first of the frame side members being associated with a first of the sash side members, each of said first frame and sash side members extending in a respective longitudinal direction substantially in parallel with a first peripheral side of the IGU,
said IGU having an exposed interior major surface for facing an interior of said building in an installed position of the skylight window, said interior major surface extending in an outward direction away from a center of the IGU, an inward direction extending in a direction opposite to said outward direction,
said IGU further having an exposed exterior major surface for facing in an exterior direction which is opposite of said interior of said building in said installed position of the skylight window, said exterior major surface extending in the outward direction, an upward direction being defined as extending away from at a right angle to said exterior major surface of the IGU,
said first frame side member having a primary leg, which in said closed position of the skylight window is positioned next to and extends along an outwardly facing surface of said first peripheral side of the IGU, and a secondary leg, which in said closed position of the skylight window extends next to and along a part of said interior major surface of the IGU, a height direction extending from the exposed interior major surface towards the exposed exterior major surface, said secondary leg having a bottom surface facing in a direction away from the interior major surface of the IGU, which bottom surface comprises a lining panel protrusion (located lower than the exposed interior major surface of the IGU in the height direction, wherein the lining panel protrusion protrudes away from the IGU, the lining panel protrusion comprising a first surface for abutting an inwardly facing surface of said reveal panel or lining panel when received by said protrusion, such as is known from EP 3396100 A1.

Background

[0002] There is often a desire to position one or more skylight windows in a roof of a building in order to allow daylight to reach the interior of the building. This, however, may give rise to a variety of challenges.

[0003] Inclined skylight windows are typically built into an opening in an inclined roof structure with an angle above 15 degrees with a substantial part of the inclined skylight window is positioned within the inclined roof structure in an installed position. Flat-roof skylight windows are generally installed on top of the exterior side of flat roofs of buildings, where the inclination of the roof is less than 5 degrees with respect to a horizontal plane of the roof. In general, flat-roof skylight windows are installed to cover an opening in the roof, i.e. a substantial part of the flat-roof skylight window extends above an exterior side of the flat roof structure in an installed position.

[0004] Furthermore, skylight windows of this type often comprise a dome-shaped weather shield attached to the sash. During an opening movement, the weather shield typically follows the movement of the sash. The main purpose of the dome or weather shield is to protect the sash and frame from the weather and to avoid accumulation of precipitation and dirt on the IGU.

[0005] It is common today to use a skylight window in flat roofs and potentially cover the window portion with a dome-shaped weather shield. One example of this type of skylight window is disclosed in WO 2009/080026 A1. This roof window comprises a standard VELUX ® outwardly hung window, to the sash of which a dome-shaped weather shield is attached.

[0006] In general, skylight windows of the prior art may be associated with relatively poor insulating properties and/or limited entry of light into an interior of the building on which the flat-roof skylight window is installed, as well as limited visibility through the window from the interior of the building as well as limited compatibility with different roof angles. This may be attributed to the manner, in which flat-roof skylight windows are installed on a roof structure of a building which generally results in a larger proportion of the window portion structure being exposed to the surrounding environment. Furthermore, with a weather shield attached to the top of the skylight, there are more layers of glazing which may result in a long travel path for light entering the flat-roof skylight window into the interior of the building.

[0007] On this background it may be an object of the present invention to provide a skylight window according to the introduction in which the insulation properties are improved.

[0008] A further object of the invention may be to provide a skylight window with improved light entry and/or in which view through the window is improved.

[0009] According to the invention, these and further objects are met by a skylight window according to claim 1, in other words a skylight window according to the in-

troduction, where said first peripheral side of the IGU is located, in said outward direction, beyond said first surface of said lining panel protrusion.

[0010] As a result, the major surfaces of the IGU may be bigger in a skylight window according to the invention compared to prior art skylight windows of similar size, fitting a similarly sized skylight window aperture in the roof in which the skylight window is to be installed. Since the IGU more often than not insulates better than the sash and frame, this may provide improved overall insulation properties of the skylight window. Furthermore, the visible area of the total area of the skylight window, which can be seen through, may be increased, which provides improved view through the skylight window as well as increased inflow of daylight.

[0011] Furthermore, the positioning of the IGU may contribute to hiding parts of the window when seen through the IGU from an interior of a building in the installed position of the skylight window. E.g. positioning the IGU such that it is the only component extending into the opening in the roof structure visible from the interior of the buidling.

[0012] The term IGU is an abbreviation of "Insulating Glazing Unit" and is a concept well-known to the skilled person.

[0013] The IGU has multiple layers of glass or glazing, which layers may define a potentially sealed volume or spacing between them, the spacing potentially comprising an inert gas, an aerogel, or a vacuum. The IGU may in a conventional manner comprise two, three or more layers of glazing, i.e. layers of glass, polycarbonate or the like, or glass panels, which may be positioned at a distance from each other to form one or more spacings or cavities between them. This spacing may be filled with a gas or may hold a vacuum to improve insulation properties of the IGU. The exposed interior major surface of the IGU may be a lower major surface of a lowermost of the layers of glazing. Sealing and/or supporting members or spacers may be provided at one or more of four peripheral sides of the IGU between the layers of glazing and may form a so-called spacer frame. The sealing and/or supporting members may distance adjacent layers of glazing from each other and may together with lateral edges of the layers of glazing form respective side or lateral surfaces of the IGU. These side surfaces may be substantially plane and/or extend substantially in the height dimension as defined herein.

[0014] Said first surface of said protrusion may be adjacent/next to the window aperture. The first surface may be perpendicular to the exterior or interior major surface of the IGU. Said protrusion may extend and surround the entire window aperture.

[0015] The skylight window may comprise a removable lining panel protrusion and/or recess. The removable lining panel protrusion and/or recess may be separately affixed to the frame and may be a part that is separate from the frame i.e. not an integral part of the frame.

[0016] The skylight window may further comprise a second protrusion next to the first protrusion to create a lining panel recess for receiving a lining panel to be installed.

[0017] Said recess may comprise a second surface positioned opposite from said first surface for abutting an outwardly facing surface of said reveal panel or lining panel when received in said recess. A distance between these first and second surfaces defines a width of the recess, which width usually corresponds to a width of an upper part of said lining panel in order to accommodate the lining panel upper part suitably in the recess. Said first peripheral side of the IGU may extend a distance of at least 0.5, 1, 1.5, 2, 2.5 or 3 times said width of said recess beyond said first surface of said recess.

[0018] The width of the recess may correspond to the width of said lining panel width. The width may be between 1-15mm. Preferably the width is 12.5mm,

[0019] A slanted portion extending away from the inside of the bottom surface of the second leg may form part of said recess. The slanted portion facilitates use of tilted (45 degree) lining panels and easier panel insertion.

[0020] The first and/or second surface of the recess may extend substantially in the height dimension and may be substantially linear.

[0021] The reveal panel or lining panel may alternatively be denoted an aperture panel or a window opening panel. It may serve the purpose of providing improved sealing and insulation towards the interior of the building. It may act as a barrier. It may provide a aesthetically pleasing transition between the skylight window and the roof structure as well as the interior of the building.

[0022] In an embodiment, at least one of the sash side members or frame side members comprises a thermal break.

[0023] The thermal break may be made from a material of a lower thermal conductivity than other parts of the first sash side member. The thermal break may be a joint joining parts of the sash. This may have the advantage of improving the insulation properties of the skylight as a lower thermal conductivity through the supporting section or sash member may be achieved. Thermal breaks may also be used for interconnecting the window frame and the sash. The thermal break may be substantially made from or comprise a polymer or foam.

[0024] In an embodiment, a transparent central area of the IGU extends, in said outward direction, beyond said first surface of said protrusion.

[0025] As is known to the skilled person, IGUs typically comprise a transparent central area surrounded with non-transparent areas at peripheries of the IGU where the glazing panels are attached to each other using sealing members and/or supporting members that typically extend along each peripheral side of the IGU.

[0026] In an embodiment, said first peripheral side of the IGU is located at, and a transparent central area of the IGU potentially extends, a distance in said outward direction from said first surface of said protrusion equal to or above 5, 10, 15, 20, or 25 percent of an extent in

the outward direction of the secondary leg between said first surface of said protrusion and an outwardly outermost surface of said secondary leg.

[0027] This increases the relative area of IGU in regards to the skylight window. The IGU is typically the best insulating component of a skylight window, this improves the insulation properties of the skylight.

[0028] In an embodiment an upper part of a reveal panel or lining panel is received in said recess, said first surface of the protrusion abutting said inwardly facing surface of said reveal panel or lining panel.

[0029] This may have the advantage of improving insulation properties by providing another barrier of material. It may further provide a more aesthetically pleasing transition between the roof structure and the skylight window.

[0030] In an embodiment said first sash side member has a first leg, which extends substantially in the upward direction.

[0031] This may protect the IGU and provide potential surface for sealing elements to be placed and seal between the first sash and frame side member.

[0032] In an embodiment, said first leg extends next to said outwardly facing surface of said first peripheral side of the IGU, and wherein the primary leg in said closed position extends next to and along an outwardly facing surface of said first leg. Hereby, the first leg is positioned between the outwardly facing surface of said first peripheral side of the IGU and the primary leg.

[0033] This may have the effect of guiding the sash side member when closing the skylight window. It may further provide a surface for placing an abutment element for aiding in the positioning of the sash and IGU in the closed position to ensure they are properly positioned in said window in the closed position to ensure optimal sealing. It may also be possible to place sealing elements between the first and primary legs.

[0034] Said outwardly facing surface of said first peripheral side of the IGU may extend substantially in the upward direction.

[0035] In an embodiment, said first leg does not extend to cover any part of said exterior major surface of said IGU.

[0036] This has the advantage of not blocking light from entering through the exterior major surface of the IGU and into the interior of the building. It may thus improve the inflow of light into the interior of the building.

[0037] In an embodiment the weather shield is without a sealed gas-filled spacing between the weather shield pane and the IGU. The weather shield pane can be of glass, hardened glass, clear polymer or other transparent or translucent materials.

[0038] In an embodiment, the first sash side member further comprises a second leg, which may potentially project from a lower end of said first leg so as to extend along part of said interior major surface of the IGU to support the IGU, said second leg potentially resting on an upper abutment surface of said secondary leg in said closed position of said window. The secondary leg may in said closed position extend next to, on an inward side of, and along said second leg of said first sash side member.

[0039] This may have the effect of ensuring correct positioning of the sash and IGU in the closed position of the window. The second leg may further protect the IGU. It may also allow further placement of sealing elements to improve sealing and insulation properties.

[0040] In an embodiment, said first sash side member further has a third leg projecting from an upper end of said first leg and extending in said outward direction and, optionally, a fourth leg projecting from said third leg and extending substantially in said upward direction and, optionally, a fifth leg projecting from said fourth leg substantially in said outward direction.

[0041] The provision of additional legs may allow the physical properties of the different legs to be tailored to their specific purpose, which may be to support the IGU, provide an abutment surface, provide a mounting surface, support a weather shield etc. For example, if a leg is supporting the IGU it may be provided with a higher strength and/or stiffness and/or smaller or larger size compared to other legs. A leg provided to aid the sealing and/or positioning of the sash and IGU may be provided with grooves or the like adapted to accommodate sealing and/or abutment elements.

[0042] The weather shield may be attached to said fifth leg.

[0043] In an embodiment, said exterior major surface of the IGU is positioned at a distance of less than 80 % of a total height of the first leg from a lower end of said first leg.

[0044] This may allow the IGU to be positioned closer to one of the main areas of thermal energy transfer between the exterior and interior of the building i.e. the interface between the exterior and interior of the building. As the IGU is typically the best insulating component of a window, this may improve the insulation properties of the skylight window. By the IGU being positioned at the lower end of the first leg, it may also provide a more compact skylight window.

[0045] In an embodiment said frame and sash side members comprise or are made substantially of one or more plastic polymer materials, preferably said frame side members comprise or are made substantially of polyurethane, and/or preferably said sash side members comprise or are made from a thermoset plastic polymer material comprising fibers.

[0046] This may provide a skylight window that is more cost effective to manufacture.

[0047] In an embodiment the skylight window is installed potentially in or on a flat or inclined roof of a building to cover a roof opening of the roof, said interior major surface of the IGU facing an interior of the building.

[0048] This may improve the light inflow and/or insulation properties of the building.

[0049] Said first sash and frame side members may

form a first pair of side members, and the remaining three said sash and frame side members similarly may form respective pairs of side members, one or more of which being provided in a manner similar or identical to said first pair of side members as defined in any one of the embodiments disclosed herein. Hereby, the IGU may similarly be extended in one or more of the other three outward directions, which may further add to the above advantages of the invention.

[0050] It is preferred that all four sash side members have the structure as described for the first sash side member and that the corresponding or associated four frame side members are also adapted accordingly.

[0051] In general in this specification, in relation to the first sash side member, a length dimension may be defined as a dimension in which said longitudinal direction extends, a height dimension may be defined as a direction perpendicular to the length dimension and to major surfaces of the IGU, and a width dimension may be defined as a dimension perpendicular to the height and length dimensions. The width and length dimensions are thus parallel to the major surfaces of the IGU. Whereas the longitudinal direction extends in the length dimension, the width and height dimensions can be said to extend in transverse or lateral directions. The length dimension may also be denoted longitudinal direction. The width dimension may also be denoted width direction. The height dimension may also be denoted height direction.

[0052] Throughout this text the term "interior" is used to indicate that something is intended to face the interior of the building in which the skylight window is installed, in an installed position of the skylight window. The term "exterior" is used to indicate that something is intended to face in a direction opposite to the interior of the building in which the skylight window is installed, in an installed position of the skylight window. The terms "inner" and "outer" are used to indicate that something is intended for facing towards or away, respectively, from the opening in the frame of an assembled skylight window.

[0053] The terms "insulation", "insulating", "insulation properties" and "insulating properties" are to be understood in the sense of thermal insulation and thermal insulation properties and thermally insulating and insulating properties. However, other insulation may also be provided such as for example acoustic insulation.

[0054] As mentioned above, skylight windows for inclined roofs are typically built into the roof structure. This means that the frame and sash, i.e. most of the frame and sash structures, are embedded in the roof so that much, most or all of an outer surface of the frame facing away from the opening in the frame is positioned within the roof structure. The inventors of the present invention have realized that in inclined skylight windows installed in this way the insulation properties of the frame and sash are to a large extent not decisive for the total heat loss through the window. However, in skylight windows where the frame and sash are positioned higher than the level of the roof i.e. above the exterior surface of the roof, the typically inferior insulation properties of the frame and sash structures compared to those of the IGU are to a much lesser degree alleviated by the insulation properties of the roof structure. In prior art skylight windows of the above described type the IGU is typically the best insulated part of the window, i.e. having the lowest thermal conductivity or "U-factor", unit W/(m2K), especially compared to the thermal conductivity of the frame and sash. Thus, the inventors have realized that it is important to minimize the area of the sash and frame through which heat energy will escape.

[0055] The IGU may have multiple layers of glass which define a volume comprising an inert gas or aerogels or vacuum. The IGU may in a conventional manner comprise two, three or more layers of glazing, i.e. layers of glass, polycarbonate or the like or glass panels, positioned at a distance from each other to form one or more spacings or cavities between them. This spacing may be filled with a gas or may hold a vacuum to improve insulation. The exposed interior major surface of the IGU is in that case a lower major surface of a lowermost of the layers of glazing. Sealing and/or supporting members may be provided at one or more of four peripheral sides of the IGU between the layers of glazing. The sealing and/or supporting members may distance adjacent layers of glazing from each other and may together with lateral edges of the window glazing layers form respective side or lateral surfaces of the IGU. These side surfaces may be substantially plane and extend substantially in the height dimension as defined herein.

[0056] The sash may be made movable in relation to the window frame by the sash being outwardly hung, i.e. being rotatable about an axis extending along one of the sash side members. Generally by outwardly hung it is to be understood that the sash moves outwards from the frame during opening. This is contrary to pivot hung skylights which move both outwards and inwards during opening and employ a different design. The sash being outwardly hung may be achieved by using a rotary hinge positioned at this sash side member and connecting this sash side member with an associated, adjacent frame side member. Alternatively or additionally, the sash may be parallel-displaceable so that all four sash side members shift upwardly or downwardly between the open and closed positions of the window in which case further or other hinges or the like connect the sash with the frame. Hinges may be linear displacement mechanisms or multi-link mechanisms. The skylight window may be hinged to open in the exterior direction i.e. away from the interior of the building.The skylight window may be openable by a combination of a rotary movement and a shifting movement or other movement paths of the sash in relation to the frame.

[0057] The exposed interior major surface of the IGU may be a lower surface of the IGU and/or may face in a downwards direction towards an interior of the building in an installed position of the skylight window. The exposed interior major surface faces in a direction away

from the weather shield.

[0058] The IGU comprises an exposed exterior major surface positioned oppositely from the exposed interior major surface and facing towards the outside, in an installed position of the skylight window. The exterior major surface may be substantially parallel with and/or may have substantially the same or the same shape and size as the interior major surface of the IGU. A distance between the two major surfaces defines a thickness of the IGU, which distance may be measured in the height dimension.

[0059] The IGU may have a rectangular shape and may have further second to fourth peripheral sides that each extends linearly along, potentially along substantially a total extent of, a corresponding respective sash member. The peripheral sides may define a shape of the IGU.

[0060] The four frame side members may together form a substantially rectangular shape. Additionally or alternatively, the four sash side members may together form a substantially rectangular shape. A rectangular shape of the four sash side members may be smaller than a rectangular shape of the four frame sash side members, which may allow the sash to be embedded within the frame.

[0061] The weather shield may be provided as a unitary structure, which is detachably attached to the sash. The weather shield may be attached detachably to the sash, providing for access to clean the IGU; this may also be of advantage during mounting of the skylight window, e.g. when positioning or attaching the window portion or when attaching roofing felt to cover a potential gap between the frame and the roof structure.

[0062] The weather shield may be mounted on the window portion to protect it from the elements and preventing rain and other downfall from entering into gaps or slots in the roof or the window portion.

[0063] The weather shield comprises a weather shield pane positioned on an exterior side of the IGU.

[0064] The weather shield may comprise a weather shield pane that may be surrounded by a weather shield skirt that may extend on an outer side of all four sides of the frame, i.e. of the respective frame side members. The skirt may be manufactured from or include metal. The weather shield pane may curve upwardly in relation to the window portion or the IGU to allow for rain and snow to slide or flow off of the weather shield pane. Alternatively or additionally, the weather shield pane may be a transparent window pane that may be of glass or hardened glass. The weather shield pane may comprise only one single layer of glazing.

[0065] The frame may enclose the sash in the closed position of the skylight window.

[0066] Respectively associated frame and sash side members may be positioned to be substantially parallel to each other in both the open and closed positions of the skylight window.

[0067] The first sash and/or frame side member may extend substantially along an entire length of said first peripheral side or side surface of the IGU.

[0068] The first leg may have a height in the height dimension of at least 1.5, 1.8, 2 or 2.2 times a height or thickness of the IGU, where the height of the IGU as mentioned may be defined as a distance between its exposed exterior major surface and its exposed interior major surface. Additionally or alternatively, the first leg may have an inner side surface facing a side surface of the first peripheral side of the IGU, this inner side surface extending 1.3, 1.5, 1.8 or 2 times the height or thickness of the IGU.

[0069] The first sash side member may in general in all embodiments have a substantially uniform cross section along a length of the first sash side member in said longitudinal direction. Alternatively or additionally, the first frame side member may have a substantially uniform cross section along a length of the first frame side member in said longitudinal direction. One or more of the remaining sash and frame side members may similarly have substantially uniform cross sections in the same manner.

[0070] Generally, one or more of the frame and/or sash side members may comprise or be made substantially of polymer materials, such as plastic, specifically PVC (polyvinyl chloride), chlorinated PVC, PUR (polyurethane), fibre reinforced PUR such as glassfibre reinforced PUR, and/or wood and/or metal such as aluminium or composites or combinations thereof. The frame and/or sash may have a general hollow core structure with one or more hollows inside spacings or cavities surrounded by thin layers or plates of material, such as plastic or PVC, specifically fiber-reinforced PVC, which plates may extend in the longitudinal direction and may be connected to each other at corners thereof such as to form a shell structure surrounding the spacings. One or more spacings may comprise a filler and/or an insulating and/or stiffening material or member, which may for example comprise or consist of wood and/or a foamed polymer material. The plates of material may be extruded, and may optionally be extruded as one or more separate elements for each frame or sash side member, which are subsequently attached to each other, and a filler material potentially being positioned in the core spacings afterwards. As an alternative, the surrounding material may be moulded around a core of filler material. These structures may provide good strength and insulation properties and may be low-cost in manufacture. Alternatively, the surrounding material or plates may comprise or substantially consist of metal, such as steel and/or aluminium. It is noted that the skylight window according to the invention can be made stronger due to the third leg of the first sash side member, see further below, which may have the advantage that the sash and frame may be made of a less strong, but better insulating material, e.g. PVC instead of steel.

[0071] The first leg of the first sash side member may on a surface facing the IGU, which surface may substan-

tially extend in the height dimension, comprise two or more grooves, the first groove being positioned at a first distance from the interior major surface of the IGU, the second groove being positioned at a second distance from the interior major surface of the IGU, which is different from distance between the first groove and the interior major surface of the IGU, the first and second grooves being adapted for receiving a fixation member which can be attached to or snap-locked to either one of the two grooves, the fixation member abutting the exterior major surface of the IGU so as to hold the IGU along said first peripheral side thereof, especially in the upward direction. Hereby the IGU may be exchanged with an IGU of different thickness by switching the fixation member to the other of the two grooves. With the present invention the IGU can be positioned lower in the window structure, which means that more room may be available for including larger thicknesses of the IGU and more grooves and thus options for IGU thicknesses. The fixation member may be manufactured of or comprise a plastic and/or sealing material and may comprise one or more projections that are adapted to be in abutment with the upper or exterior major surface of the IGU such as to hold this in place against the upper resting surface of the second or third leg. The fixation member may extend substantially along an entire length (in the longitudinal direction) of the first sash side member and/or the first peripheral side of the IGU. Similar fixation members may be attached to similar grooves of the one, two or three of the other sash side members along the other three peripheral sides of the IGU.

[0072] The sash side members may be interconnected at the corners of the respective sash by corner keys. The corner keys may be attached to respective sash side members in hollows thereof. The corner keys may be made substantially of of a rigid and hard material such as metals like aluminium, steel or wood. The corner keys act to prevent sash members from moving out of alignment with interconnected sash members respectively.

[0073] A chain drive, hinge or the like may be provided connecting the sash and frame for assisting in opening and closing the skylight window.

[0074] In this specification, generally one or more or all individual ones of the legs mentioned herein of the sash and frame members may be provided separately from each other, each leg potentially being attached to adjacent legs. Alternatively, where a leg is described as being attached to another leg, these two legs may be provided integrally or in one piece with each other.

[0075] In an embodiment of the present invention, said second leg extends as far as or farther than said secondary leg in said inward direction.

[0076] This may improve or further contribute to hiding parts of or the entire window when seen through the IGU from an interior of a building in the installed position of the window.

[0077] In an embodiment, said primary leg of said first frame side member extends as far as or farther in said upward direction than the location of said exterior major surface of the IGU.

[0078] This allows for positioning the IGU deeper or lower in the window structure. This reduces the area of the sash and frame through which heat energy escapes (or enters) from the interior of the building. Furthermore, improved light inflow and view through the skylight window are achieved.

[0079] In an embodiment, said first sash side member further has a third leg projecting from an inner end of said second leg in a direction away from said interior major surface of the IGU to provide a lower supporting surface which in the closed position of the window rests on a corresponding upper resting surface of the first frame side member. The direction away from said interior major surface of the IGU, in which direction the third leg projects, may extend substantially in the height dimension and/or may extend downwards, i.e. towards an interior the building in an installed position of the skylight window.

[0080] Said inner end of the second leg may be positioned opposite from an outer end of the second leg, said outer end preferably being connected to the first leg at a position from which the second leg projects. Said inner end may be denoted a proximal end and said outer end a distal end with relation to the first leg.

[0081] The third leg of the first sash side member may provide additional support to the IGU, which is a typically relatively heavy component of the window. This means that it is possible to substantially reduce the strength and/or stiffness of the first and second legs of the first sash side member without compromising structural integrity of the first sash side member. As a consequence,, the first and second legs may be made of smaller size, which again allows for positioning the IGU lower in the window structure as well as to use an IGU with a larger planar area, i.e. it extends further to the sides and so increase the relative area of IGU compared to the skylight window. This reduces the area of the sash and frame through which heat energy escapes from (or enters) the interior of the building.

[0082] The third leg may be provided in the form of a stiffening and/or strengthening leg, which substantially improves stiffness, strength, structural integrity and/or the like of the first sash side member. Accordingly, the third leg may affect stiffness, strength, moment of inertia and/or like structural properties of the first sash side member, including providing greater resistance to bending. Improved structural properties mean that the sash can hold a larger IGU or an IGU having a plurality of glazing layers.

[0083] Thus, by improving the structural properties of the sash in this manner, it has been found that when holding IGUs of substantially the same size and weight as in the prior art, it is possible to decrease the size of other legs of the sash, specifically the first and second legs. The IGU can be placed lower in the skylight window construction, and as such will improve the insulating

properties of the skylight window.

[0084] Furthermore, due to the improved structural properties of the first sash side member the inventors have realized that inclusion of the third leg need not obstruct entry of light or the view through the IGU. On the contrary, since it is possible to position the IGU lower in the window structure, entry of light and view through the IGU may, in fact, be improved.

[0085] The third leg may comprise the only or substantially the only supporting surface or supporting point of the first sash side member resting on the frame in the closed position of the skylight window. Similarly, in one or more of the remaining three sash side members a corresponding third leg may comprise the only or substantially the only supporting surface or supporting point of the respective sash side member resting on the frame in the closed position of the skylight window. This may provide an improved ability to position and center the skylight window during closing thereof. Other contact points or contact surfaces between the sash and frame in the closed position of the skylight window, which contact surfaces are not carrying any substantial amount of the weight of the sash in the closed position of the skylight window, may include sealing members between associated sash and frame side members. An insignificant amount of a weight of the sash in the closed position of the window can be defined as less than 20, 10, 5, 3, 2 or 1 percent of a total weight of the sash the sash imposed by the first sash side member on the first frame side member. It is preferable that the only contact points between one, two, three or four of the sash side members to the associated frame side member are established by the abutment element(s) and potential sealing members, potentially a hinge and/or a chain drive for moving the sash. The abutment element (s) may be of or comprise an elastic material and/or a plastic material and/or a sealing material. The abutment element may be deformed in the closed position of the skylight window.

[0086] In case a rotary hinge and/or a chain drive is included in the skylight window, the rotary hinge and/or chain drive may also establish an indirect contact point between sash and frame, which may also carry part of the weight of the sash in both the closed and especially in the open position of the skylight window.

[0087] Alternatively, a lower supporting surface of the second leg may in the closed position of the window rest on a corresponding upper resting surface of the first frame side member. The first leg or the potential fourth leg mentioned further below may also or alternatively comprise a lower supporting surface that rests on a corresponding upper resting surface of the first frame side member in the closed position of the skylight window. An upper resting surface of the second or third leg on which the IGU rests may be provided as an upper resting surface in the form of one or more sealing members, which sealing members may be manufactured from a polymer material, may include glue and/or a sealing material and may extend in the longitudinal direction, potentially in substantially an entire length in the longitudinal direction of the first peripheral side of the IGU and/or of the second leg. The lower supporting surface of the first leg and/or of the second leg and/or of the third leg may be provided by one or more abutment elements attached to or forming part of one or both of the sash and frame. This abutment element(s) may be provided at a corner (corners) of the first sash and/or frame side member.

[0088] Said side surface extending along said first peripheral side may potentially have an angle to the interior major surface of the IGU of approximately 90 degrees. Generally, each of the first, second and/or third legs may be substantially plate-shaped and/or oblong and/or have a flat shape, potentially so that they together form a step where an upper surface of the second leg may be denoted a step surface.

[0089] Generally, the first leg may extend longer, e.g. at least 1.5, 2, 2.5 or 3 times longer, in the height dimension than in the width dimension. Similarly, the second leg may extend longer, e.g. at least 1.5, 2, 2.5 or 3 times longer, in the width dimension than in the height dimension. Similarly, the third leg may extend longer, e.g. at least 1.5, 2, 2.5 or 3 times longer, in the height dimension than in the width dimension. Alternatively or additionally, the second leg may extend longer, e.g. at least 1.5, 2, 2.5 or 3 times longer, in the width dimension than the first leg and/or than the third leg. As explained above, it is possible to increase these ratios of the first and second leg due to the improved structural properties gained by the provision of the third leg, which makes it possible to position the IGU lower in the window structure and to extend further sidewards than would otherwise be the case. The distance the legs extend in a dimension may in this context by an overall and/or total and/or largest extent of the relevant leg.

[0090] Alternatively or additionally, generally, the extent in the length dimension of the first, second and third legs may be substantially equal to or 1 to 1.3 times the extent of the first peripheral side of the IGU in the length dimension. The extents measured also in this context and in general throughout the present specification may be an overall and/or total and/or largest extent of the leg in question in the relevant direction. Alternatively or additionally, the second leg may be defined as projecting from a surface of the first leg, which surface extends substantially in the height dimension and faces the IGU, and/or the third leg may be defined as projecting from a surface of the second leg, which surface extends substantially in the height dimension and is substantially perpendicular to the IGU. These latter surfaces may be imaginary, i.e. the relevant portions may be integral with each other at said imaginary surfaces. If these surfaces are imaginary, the surfaces may be denoted planes.

[0091] Generally, an angle between the first and second legs and/or between the second and third legs may be 70 to 110 degrees or 80 to 100 degrees or substantially 90 degrees. This angle may be measured between a surface of one leg adjacent or contiguous to a surface of

the other leg and/or between a overall directions in which the respective legs extend.

[0092] Generally, the first leg may be attached to or formed integrally with the second leg, and/or the second leg may be attached to or formed integrally with the third leg.

[0093] Generally, the first and third legs may project in substantially opposite directions from the second leg, these opposite directions both preferably being substantially in the height dimension. The first leg may extend in an upwards direction, and/or the third leg may extend in a downwards direction.

[0094] The third leg may be positioned with a major part thereof being located beneath the first leg.

[0095] The lower supporting surface of the third leg may form part of the third leg and/or may be a lower surface of the third leg and/or may extend substantially in the width dimension.

[0096] The direction away from said exposed interior major surface of the IGU, in which direction the third leg projects, may extend substantially in the height dimension and/or may extend downwards, i.e. towards an interior the building in an installed position of the skylight window.

[0097] In general, in a cross section perpendicular to the length dimension or to the longitudinal direction the first leg and/or second leg and/or third leg may be substantually shaped as a rectangle, e.g. outer surfaces of the individual leg form an overall rectangular shape. However, the first leg may be substantially shaped as a trapezoid or a trapezium, an outer surface of the first leg extending substantially along a surface of the first frame side member (e.g. along a surface of the primary leg of the first frame member, which may be similarly inclined, see further below) being inclined, e.g. with 1 to 10 or 2 to 5 degrees, with respect to the height dimension. This inclination may be towards the second leg and/or may be in an outward and upward direction. An inward direction may generally in this specification be defined as a direction towards a centre of the IGU, and the outward direction may be a direction opposite to the inward direction, which directions extend in the width dimension. The first frame side member may comprise a side surface extending substantially in parallel with the the latter side surface of the first leg in the closed position of the window. A surface of the first leg extending along another surface of the first frame side member (e.g. along an upper surface or the step surface of the secondary leg of the first frame side member, see further below) may extend substantially in the width dimension. A surface positioned opposite from the latter surface of the first leg may be substantially parallel to the latter surface of the first leg in the closed position of the window. Another surface of the first leg, specifically a surface extending next to the side surface of the first peripheral side of the IGU, may connect the two latter surfaces of the first leg and/or may extend substantially in the height dimension. Similarly, the third leg may comprise a side surface facing a surface of the first frame side member and extending substantially in the height dimension, but may extend at an angle of 1 to 10 or 2 to 5 degrees with relation to the height dimension. The first frame side member may comprise a side surface extending substantially in parallel with the latter side surface of the third leg in the closed position of the window. The inclination in this context may be in a direction away from the second leg and/or may be in an outward and upward direction.

[0098] Said lower supporting surface of said third leg of the first sash side member and/or the corresponding upper resting surface of the first frame side member may extend substantially in the width dimension.

[0099] One or more sealing members may be provided at acorner formed between the second and third legs, this sealing member abutting the first frame side member in the closed position of the skylight window.

[0100] In an embodiment of the invention said first sash side member further has a fourth leg projecting from an upper end of said first leg in a direction away from from the IGU. Said direction away from the IGU may be in said width dimension and/or be said outward direction.

[0101] The fourth leg may provide a further lower supporting surface which in the closed position of the window rests on a corresponding further upper resting surface of the first frame side member, specifically of the primary leg thereof mentioned further below.

[0102] Alternatively or additionally, the fourth leg may in the closed position of the window be positioned above the below mentioned primary leg of the first frame side member. A width of the fourth leg may substantially correspond to a width of this primary leg.

[0103] As is the case for the first, second and third legs, the fourth leg may be substantially plate-shaped or have a flat shape so that an upper surface thereof forms a further step surface similar to and potentially extending substantially in parallel with the step surface of the second leg.

[0104] Alternatively or additionally, the fourth leg may have an oblong shape in the width dimension and/or may extend longer, e.g. at least 1.5, 2, 2.5 or 3 times longer, in the width dimension than in the height dimension. Alternatively or additionally, the extent in the length dimension of the fourth leg may be substantially equal to or 1 to 1.3 times the extent of the first peripheral side of the IGU in the length dimension. Alternatively or additionally, the fourth leg may be defined as projecting from a surface of the first leg extending in the height dimension and facing away from the IGU. This surface may be imaginary in the manner described above.

[0105] An angle between the first and fourth legs may be 70 to 110 degrees or 80 to 100 degrees or substantially 90 degrees.

[0106] The fourth leg is preferably attached to or formed integrally with the first leg.

[0107] The fourth leg may extend along, preferably along a substantially entire length of, the first peripheral side of the IGU.

[0108] The fourth and second legs may extend substantially in parallel.

[0109] In a cross section perpendicular to the length dimension or to the longitudinal direction the fourth leg may be substantually shaped as a rectangle. However, the fourth leg may be substantially shaped as a trapezoid or a trapezium, a surface of the fourth leg extending substantially along an upper surface of the first frame side member (e.g. along an upper surface of the primary leg of the first frame member, which may be similarly inclined, see further below) being inclined, e.g. with 1 to 10 or 2 to 5 degrees, with respect to the width dimension. This inclination may be in the inward and/or downward direction. The fourth leg may further comprise a first lateral side surface facing and/or attached to the first leg and potentially extending substantially in the height dimension and an opposite, substantially parallel side surface that may face in the outward direction. An upper surface of the fourth leg may extend substantially in the width dimension and may connect the two parallel surfaces thereof.

[0110] The fourth leg may have a height in the height dimension less than the thickness of the IGU and/or substantially equal to the height of the second leg.

[0111] One or more sealing members may be provided at acorner formed between the fourth and first legs, these sealing members abutting the first frame side member in the closed position of the skylight window. Alternatively or additionally, a sealing element may be attached to the fourth leg or to the first frame side member, the sealing element preferably covering an outwardly facing potential gap or a slot between the fourth leg and the first frame side member in the closed position of the skylight window.

[0112] In a development of the embodiment comprising a third leg, the IGU extends from an inner edge of the third leg towards the first leg in the width dimension to farther than half of an accumulated width of the first, second and third legs.

[0113] Hereby the IGU extends relatively far in the width dimension, which reduces heat transmission through the frame and sash and thus through the window as explained in the above. As explained, this is made possible due to the provision of the third leg, which allows for thinner first and second (and fourth) legs.

[0114] More preferred, the IGU extends from an inner edge of the third leg in the width dimension to farther than 0.6, most preferred farther than 0.7, of said accumulated width of the first, second and third legs.

[0115] In another embodiment the interior major surface of the IGU is positioned at a distance of less than 45 % of a total height of the first leg from said lower end of said first leg.

[0116] Hereby the IGU is positioned relatively deep in the window structure, i.e. in the downward direction, which similarly reduces heat transmission through the frame and sash and thus through the window as explained in the above. Again, this is made possible due to the provision of the third leg, which allows for thinner first and second legs.

[0117] The lower end of the first leg may be defined as the lowest position of the first leg in the height dimension and/or the end of the first leg from which the second leg projects.

[0118] More preferred the interior major surface of the IGU is positioned at a distance of less than 40, 35, 32 or 30 % of the total height of the first leg from said lower end of said first leg.

[0119] In another development of the embodiment comprising a third leg, the third leg has an oblong shape in the height dimension.

[0120] The oblong shape of the third leg may be defined as the height of the third leg being at least 1.5, 2, 2.5 or 3 times longer than the width thereof. Additionally or alternatively, the third leg may extend in the height dimension 1, 1.5, 2 or 2.5 times a height of the second leg. Additionally or alternatively, the third leg may have a height of 0.3 to 1, 0.3 to 0.8, 0.4 to 0.7 or 0.4 to 0.6 times a height of the first leg. Additionally or alternatively, a height of the third leg may be 0.5 to 1.5, 0.7 to 1.3 or 0.8 to 1.2 times a width of the second leg.

[0121] In another embodiment the first frame side member comprises a primary leg with a surface extending next to and along a side surface of said first leg of the first sash side member, said side surface of said first leg facing substantially away from said first peripheral side of the IGU, and a secondary leg extending along a surface of said second leg of said first sash side member, which surface faces substantially away from said interior major surface of the IGU.

[0122] In an embodiment, the cross-sectional shape of the first frame side member and the first sash side member may have a stepped profile, where the frame side member may comprise primary, secondary, tertiary or more legs where each leg may be substantially perpendicular to an immediately preceding leg and the immediately following leg, such that a step like structure is formed. Similarly, the first sash side member may comprise a first, second, third or more legs, where each leg may be substantially perpendicular to an immediately preceding leg and the immediately following leg, such that a step like structure is formed. Generally, each of the primary, secondary and/or tertiary legs may be substantially plate-shaped and/or oblong and/or have a flat shape, potentially so that they together form a step where an upper surface of the second leg may be denoted a step surface. Similarly the the first, second and/or third legs may be substantially plate-shaped and/or oblong and/or have a flat shape, potentially so that they together form a step where an upper surface of the second leg may be denoted a step surface.

[0123] A stepped configuration of adjacent surfaces of the first sash and frame side members may thus be achieved by means of the stepped profile of the first sash side member as described and an associated stepped profile of the first frame side member according to the present embodiment. This stepped configuration may

provide a labyrinth like structure between the sash and frame side member, resulting in a less direct path for air, precipitation or dirt to pass between the interior and exterior of the building. The stepped profile also provides the possibility of placing sealing elements along the profile such that sealing is facilitated between two parallel surfaces i.e. a surface of the frame side member and a parallel sash side member. Furthermore, insulating sealing members may conveniently be positioned between the first sash and frame side members at respective corners of the stepped configurations, e.g. as described in the above. Hereby, insulating and sealing properties of the skylight window may be further improved. This allows the force exerted through the sash corresponding to the weight of the IGU and sash to be utilized in compressing the sealing elements place between the frame side member and sash, to ensure optimal sealing.

[0124] In the embodiment comprising a third leg, the secondary leg of the first frame side member may further comprise a side surface, which may extend substantially in the height dimension, and which faces, is placed next to and/or extends along a side surface of the third leg of the first sash side member. Said side surface of the third leg of the first sash side member may similarly extend substantially in the height dimension and/or may face in the outwards direction. Said two side surfaces may be substantially parallel to each other in the closed position of the window and/or be inclined with 2-10 or 2-5 degrees in relation to the height dimension and/or they may extend in the length dimension and/or along substantially a total extent of the first sash and frame side members in the longitudinal direction.

[0125] In the embodiment comprising a third leg, the third leg may have an extent in the height dimension of at least 0.2, 0.3, 0.4 or 0.5 times an extent of the secondary leg in the height dimension.

[0126] In a development of the embodiment comprising a third leg, the first frame side member comprises a tertiary leg, which comprises said corresponding upper resting surface of the first frame side member on which said lower supporting surface of said third leg of the first sash side member rests in the closed position of the window.

[0127] The tertiary leg may in the closed position of the window be positioned below or immediately below the third leg of the first sash side member. A width of the tertiary leg may be 0.3 to 1 of a width of the third leg.

[0128] The tertiary leg may be substantially plate-shaped or have a flat shape so that an upper surface thereof forms a further step surface similar to and potentially extending substantially in parallel with the step surfaces of the primary and secondary legs. This step surface may be positioned beneath the abutment element explained further below.

[0129] The tertiary leg may have an oblong shape in the height dimension and/or may extend longer, e.g. at least 1.5, 2, 2.5 or 3 times longer, in the height dimension than in the width dimension. Alternatively or additionally, the extent in the length dimension of the tertiary leg may be substantially equal to or 1 to 1.3 times the extent of the first peripheral side of the IGU in the length dimension. Alternatively or additionally, the tertiary leg may be defined as projecting from a surface of the secondary leg extending in the width dimension and facing inwardly. This surface may be imaginary in the manner as mentioned above.

[0130] An angle between the secondary and tertiary legs may be 70 to 110 degrees or 80 to 100 degrees or substantially 90 degrees.

[0131] The tertiary leg is preferably attached to or formed integrally with the secondary leg.

[0132] The tertiary leg may extend along, preferably along a substantially entire length of, the first peripheral side of the IGU.

[0133] The tertiary and third legs may extend substantially in parallel in the closed position of the window.

[0134] The tertiary leg may project from the secondary leg substantially inwardly and/or in the width dimension.

[0135] The tertiary leg may form a third step surface, corresponding to the first and second step surfaces of the primary and secondary legs, respectively, which may be substantially parallel to the first and second step surfaces.

[0136] In a cross section perpendicular to the length dimension or to the longitudinal direction the tertiary leg may be substantually shaped as a rectangle. However, the tertiary leg may be substantially shaped as a trapezoid or a trapezium, an inwardly facing surface of the tertiary leg being inclined, e.g. with 1 to 10 or 2 to 5 degrees, with respect to the height dimension. This inclination may be in the inward and/or the upward direction. The tertiary leg may further comprise a first lateral side surface facing and/or being attached to the secondary leg and potentially extend substantially in the height dimension and an opposite side surface that may face in the inward direction, the latter being the surface that may be inclined in relation to the height dimension. The resting surface or an upper surface of the tertiary leg may extend substantially in the width dimension and may connect the two lateral side surfaces thereof.

[0137] The tertiary leg may have a height in the height dimension less than the thickness of the IGU and/or less than that of the first, third, primary and/or secondary leg.

[0138] In a development of the embodiment comprising a third leg, an abutment element may be provided as part of said third leg of the first sash side member so that said abutment element provides said lower supporting surface of said third leg, and/or is provided as part of the first frame member so that said abutment element provides said corresponding upper resting surface of the first frame side member on which said lower supporting surface of said third leg rests in the closed position of the skylight window.

[0139] The abutment element may extend along substantially a total length of the first frame and/or sash frame side members and/or substantially along a total length

of the third leg and or said lower surface of the third leg, these lengths being in the length dimension.

[0140] The abutment element is preferably a separate part attached to remaining parts of the tertiary leg. Furthermore, the abutment element may comprise an abutment surface, which includes or forms the resting surface on which the supporting surface of the third leg rests in the closed position of the skylight window. The abutment surface may in a position in which the third leg does not rest on it be inclined with an angle of 5 to 25 or 10 to 20 degrees with respect to the height dimension and/or may extend substantially linearly. Such an inclined abutment surface may help positioning or centering the sash in the frame during a closing movement. Accordingly or alternatively, the supporting surface of the third leg of the sash side member, which supporting surface is in abutment with the resting surface of the abutment element in the closed position of the skylight window, may comprise part of an outer side surface of the third leg as well as part of a lower surface of the third leg, these outer and lower surfaces of the third leg forming a lower, outer corner of the third leg. Hereby the third leg and thus the first sash side member are held by the abutment element both in the width dimension (outwardly) and in the height dimension (downwardly). Holding the sash in the width dimension helps centering and embedding the sash in the frame in the closed position of the skylight window, especially if all sash and frame side members are provided with a similar configuration.

[0141] In embodiments where the secondary and tertiary legs of the frame side member are provided, the abutment element may form part of the secondary and/or of the tertiary leg of the first frame side member, and/or the abutment element may be attached to and/or abut one side the secondary leg and/or be attached to another part of the tertiary leg.

[0142] The abutment element may form a seal covering an opening or slot that would otherwise be provided between the third leg of the first sash side member and the tertiary leg of the first sash frame side member in the closed position of the skylight window.

[0143] A similar abutment element may be provided in a similar manner on or forming part of one, two or three of the remaining frame and/or sash side members. In this case, abutment elements with inclined surfaces in the manner described will help positioning and centering of the sash within the frame during closing of the skylight window.

[0144] The abutment element(s) may form the only or substantially the only resting point or resting surface of the sash or of one or more of the sash side members on the frame in the closed position of the skylight window. This provides a superior ability to position and center the skylight window during closing thereof. Other contact points between sash and frame in the closed position of the skylight window may include sealing members between associated sash and frame side members, but these sealing members preferably only carry an insignificant amount of the sash in the closed position of the window, i.e. less than 10, 5, 3, 2 or 1 percent. It is preferable that the only direct contact points between one, two, three or four of the sash side members to the associated frame side member are established by the abutment element(s) and potential sealing members. Generally, a sash side member is "associated" with a frame side member if they lie adjacent to each other in the closed position of the skylight window. In case a rotary hinge and/or a chain drive is/are included in the skylight window, the rotary hinge and/or chain drive may establish one or more indirect contact points or contact areas between sash and frame, which may also carry part of the weight of the sash in both the closed and especially in the open position of the skylight window.

[0145] In another embodiment a second, third and/or fourth sash side member is/are substantially similar and/or identical in shape and/or form and/or size and/or structure to the first sash side member.

[0146] In another embodiment a second, third and/or fourth frame side member is/are substantially similar and/or identical in shape and/or form and/or size and/or structure to the first frame side member.

[0147] In the latter two embodiments, all frame and/or side members, respectively, may have substantially identical cross sectional shapes in a cross section perpendicular to the length dimension associated with the first sash side member. Alternatively or additionally, all frame and/or sash side members, respectively, may be substantially identical to each other.

[0148] Thus, two or more of the four respective frame and sash side members may be similar or substantially identical to each other. This makes it cheaper to produce and may allow for optimal movement and positioning of the sash during opening and closing of the skylight window. Also, safe sealing may be provided between the sash and frame, simple mounting may be achieved and the structural properties of the frame and/or sash are the same on all sides of the skylight window.

[0149] In case the first sash side member comprises the above described fourth leg, the weather shield may be attached to the fourth leg. In case all four sash side members comprise the above described fourth leg, the weather shield may be attached to each of the fourth legs.

[0150] In alternative embodiments, the weather shield may be formed by a flat window pane, which may be positioned to be substantially parallel to the window portion. In such an embodiment, the window pane acting as weather shield may be of a different size than the remaining IGU panes, by being larger or smaller, in a plane parallel to the interior major surface of the IGU, than the other panes.

[0151] In another development of the embodiment comprising a third leg, the first frame side member further comprises a cover leg that covers the third leg in the closed position of the skylight window so as to at least partly or substantially hide the third leg when seen from below the interior major surface of the IGU.

[0152] Hereby the third leg, which is typically the only or the most visible element of the first sash side member when seen from inside the building, may be at least partly or completely hidden when seen from inside the building in an installed position of the window.

[0153] The cover leg may extend in the longitudinal direction along substantially an entire length of the first leg and/or the first sash side member.

[0154] In the embodiment where the first frame side member comprises a tertiary leg, the cover leg may form part of the tertiary leg or extend from an inward surface of the tertiary leg. The cover leg and the secondary and tertiary legs of the first frame side member may establish a longitudinally extending groove, potentially with the secondary leg and the cover leg defining sides thereof and the tertiary leg defining a bottom thereof, and into which the third leg of the first sash side member is inserted or embedded when the sash moves to the closed position of the skylight window.

[0155] In an embodiment the skylight window is installed in or on a flat roof of a building to cover a roof opening of the roof, said exposed interior major surface of the IGU facing an interior of the building.

[0156] In an embodiment the skylight window is installed in or on an inclined roof of a building to cover a roof opening of the roof, said exposed interior major surface of the IGU facing an interior of the building.

[0157] A flat roof may be defined as a roof with a roof inclination, i.e. an inclination of a roof surface, of less than 5 degrees in relation to horizontal.

[0158] An inclined roof may be defined as a roof with a roof inclination. i.e. an inclination of a roof surface, of more than 5 degrees inclination in relation to horizontal.

[0159] The skylight window may be positioned so that a major part of or the entire frame and/or the entire sash are positioned above an upper roof surface level.

[0160] Interior and exterior major surfaces of the IGU may be substantially parallel in the closed position of the window with a plane defined by the roof surface or may have an inclination of less than 1, 2, 3, 4 or 5 degrees to said roof surface plane.

[0161] Providing the skylight window with the lining panel protrusion can help an installer install a lining panel at the skylight window by guiding an upper end of the lining panel into contact with a first side of the protrusion, and may further ease the installation by hiding the upper end of said lining panel e.g. if the upper end is not flush with the interior side of the skylight window. The lining panel can be used to hide the skylight frame, for viewers, including insulation elements such as an insulting block and can thus, allow for improving the insulating properties of the skylight window as a whole.

[0162] In some embodiments, the skylight window further comprises a second protrusion next to the first protrusion to create a lining panel recess for receiving a lining panel to be installed. Said lining panel recess would add to the guidance and ease of installation of the lining panel.

[0163] In an embodiment, the skylight window may further comprise a motor-driven actuator comprising an elongated lifting element connecting the frame and the sash for moving the sash between the open position and the closed position, said elongated lifting element having a top end and a first position in which the skylight window is in the closed position and a second position in which the skylight window is in the open position. The top end of the elongated lifting element may abut or be attached to the sash. The motor-driven actuator may be positioned between the IGU and the frame in a direction parallel with the exposed interior major surface of the IGU in the closed position of the skylight window. The motor-driven actuator may be a chain actuator, the elongated lifting element may be a chain, and the top end may be a top end of a top joint of the chain. The lifting element in the closed position may be collapsed, rolled-up, folded-up, telescopically retracted or in another way compacted. The lifting element may be unrolled, unfolded, telescopically extended, or in another way extended in the open position.

[0164] The chain actuator may comprise a push-pull chain which can extend and retract to open and close the skylight window. Such a chain may be referred to as a trust chain as it may transmit a push force. The chain may be driven by an electric motor. A reduction gear may be provided. The reduction gear may comprise a worm and/or multiple gear drive. A final sprocket gear may engage the chain. A spindle may be used to drive the chain. The chain actuator may fold the chain when the chain is retracted and stored. The chain may be stored to substantially extend in a storing direction or such that one or more lengths of the chain extend substantially in a storing direction. The chain extending to open the skylight window may extend substantially perpendicularly to the storing direction. The storing direction may be the same as the longitudinal direction, in which case the chain may be stored to substantially extend in the longitudinal direction along a frame side member. This may provide a compact solution.

[0165] The chain actuator may be hidden inside a window frame or sash or otherwise arranged out of sight, e.g. outside a periphery of the skylight window. The chain actuator may be arranged in a spacing defined between the sash and the frame in the closed position of the skylight window. Preferably the chain actuator may be arranged inside a frame profile or inside a sash profile. The chain actuator may comprise an actuator housing. The chain may extend and retract through an opening in the actuator housing. The actuator housing may be an elongated actuator housing. The actuator housing may extend substantially extend in parallel with the storing direction. The chain extending to open the skylight window may extend substantially perpendicularly to the actuator housing. The chain actuator housing may be hinged to the skylight window so the chain can tilt during movement such as extending and/ or retracting to open and/or close the skylight window. The chain actuator may be self-locking and support and/or hold the weight of sash and IGU.

The chain actuator may also be assisted by a spring to carry some of the weight of sash and IGU. The chain actuator may comprise a locking mechanism and/or brake to lock-up the chain. Besides the compact design a chain actuator may have other advantages. The chain actuator may provide a stable opening force from the very beginning of the opening movement.

[0166] A person skilled in the art will appreciate that any one or more of the above embodiments and/or developments and/or options may be combined with each other to form further embodiments of the present invention, which is defined by the claims.

Detailed Description

[0167] In the enclosed drawings, which show non-binding examples of embodiments of the present invention,

Fig. 1 is a perspective view from above of an embodiment of a skylight window according to the present invention installed in a roof,
Fig. 2 is a cross-sectional side view taken along the line II-II of Fig. 1 showing a detail of the window according to Fig. 1,
Fig. 3 is a cross-sectional perspective view seen from above of the cross section shown in Fig. 2,
Fig. 4 is a cross-sectional side view taken along the line IV-IV of Fig. 1 showing another detail of the window according to Fig. 1,
Fig. 5 is a cross-sectional view similar to that of Fig. 2 showing an alternative embodiment of a first frame side member of the skylight window according to Fig. 1,
Fig. 6 is a cross-sectional view similar to that of Fig. 2 showing an alternative embodiment of the first sash side member of the skylight window,
Fig. 7 is a cross-sectional view similar to that of Fig. 6 showing an alternative embodiment of a first sash side member of a skylight window.
Fig. 8 is a cross-sectional view similar to that of Fig. 6 showing a first frame side member with an insulating block,
Fig. 9 is a cross-sectional view of the invention with a box-structure and a highly positioned IGU,
Fig. 10 is a cross-sectional view similar to that of Fig. 9 with a recess close to the interior surface of the IGU, and
Fig. 11 is a perspective view from above of an embodiment of a skylight window according to the present invention with a cut-out section.

[0168] Fig. 1 shows an embodiment of a skylight window 1 according to the present invention installed or positioned substantially horizontally in a flat roof 2 of a building (of which only the roof 2 is shown) and comprising a weather shield 3. The skylight window 1 further comprises a window portion 4, which includes a transparent IGU 5, a sash 6 visible through the IGU 5, and a frame 7. The weather shield 3 comprises a transparent weather shield pane 8 and a skirt 9.

[0169] The flat roof 2 has a roof inclination of less than 1 % in relation to horizontal. The skylight window 1 is positioned so that a major part of or the entire frame 7 and the entire sash 6 are positioned above an upper roof surface level, also denoted an exterior roof surface level. The skylight window may however also be installed in an inclined roof.

[0170] Interior and exterior exposed major surfaces of the IGU 5 are substantially parallel with a plane defined by the roof surface, i.e. the upper roof surface level. In fact, both the entire sash 6 and the entire frame 7 are positioned above the upper roof surface level.

[0171] The frame 7 comprises four frame side members of which two 10, 11 are visible in Fig. 1, and one 18 is visible in Fig. 4. Each frame side member is respectively associated with one of four corresponding sash side members of which two 12, 13 are visible in Fig. 1, and one 14 is visible in Fig. 2. The frame side member 10 is associated with the sash side member 14. The frame side member 10 is the embodiment of the first frame side member of the skylight window according to the invention. The sash side member 14 is the embodiment of the first sash side member according to the invention.

[0172] The window sash 6 supports the IGU 5 and is movable in relation to the window frame 7 between an open (not shown) and a closed position of the skylight window 1. The window is shown in the closed position in all of the figures.

[0173] Fig. 2 is a cross-sectional side view showing a detail of the window according to Fig. 1 taken along the line II-II of Fig. 1, the cross sectional plane being perpendicular to a longitudinal direction L of the frame side member 10, the direction L being the direction in which the frame side member 10 extends along a first peripheral side 5a of the IGU 5, see Fig. 1. Fig. 2 specifically shows a cross-section of the frame side member 10 and of the sash side member 14 as well as part of the weather shield 9 and part of the IGU 5 of Fig. 1.

[0174] Fig. 3 shows the same cross sectional view as Fig. 2, but in perspective.

[0175] The IGU 5 has an exposed interior major surface 5b facing downwards towards an interior of the building in the shown installed position of the skylight window 1.

[0176] The frame side member 10 is associated with the sash side member 14, the sash side member also extending in the longitudinal direction L and in parallel with the frame side member 10 both in the open and the closed position of the skylight window 1.

[0177] Each frame side member is positioned along and at an outside of a respective associated one of the four sash side members.

[0178] The frame side member 10 comprises a bottom surface 10a, which is level with the a surface of the roof

2. This bottom surface 10a faces downwards and comprises a protrusion 10e, extending away from the IGU, with a first side 10c for facing a side of an upper end of a reveal or lining panel. Bottom surface 10a further comprises a second protrusion next to the first protrusion to create a lining panel recess 10b for receiving a lining panel to be installed. Said lining panel recess would add to the guidance and ease of installation of the lining panel.

[0179] The recesss 10b being an empty spacing that accomodates an upper part or upper end 50a of a reveal panel or lining panel 50 in the installed position of the skylight window 1 as shown. The remaining three frame side members are provided with similar recesses accomodating respective similar panels. These panels define the reveal or aperture, or light well or light shaft, which extends through an entire height of the roof 2 so as to provide the opening in the roof structure, which leads to the window 1 itself.

[0180] The second lining panel prutrusion comprises a second surface 10d positioned oppositely from said first surface for abutting an outwardly facing surface of said reveal panel or lining panel when received in said recess. The first and second surfaces 10c, 10d of the recess 10b extend substantially in the height dimension and are substantially linear. A distance between these first and second surfaces defines a width of the recess, which width corresponds to a width of the upper part 50 of the lining panel 50 in order to accommodate the lining panel upper part 50 in the recess 10b. The first peripheral side 5a of the IGU 5 is located farther in the outward direction than said first surface 10c of the recess 10b so as to extend 15 percent of an extent in the outward direction of the secondary leg between said first surface of said recess and an outwardly outermost surface of said secondary leg. The weather shield 3 is provided as a unitary structure, which is separate from the window portion 4. The weather shield 3 is mounted on the window portion 4 for covering and weather protecting the window portion 4 in the installed state of the skylight window 1. The weather shield pane 8 is curved outwardly, i.e. upwardly in Fig. 1, in relation to the window portion 4. The weather shield pane 8 is a transparent IGU of hardened glass.

[0181] The slightly curved weather shield pane 8 extends over an entire central roof opening, which opening the skylight window 1 is positioned to cover. In other embodiments, a flat window pane may be used to replace the weather shield 3.

[0182] As is seen in Figs 2 and 3 the exposed exterior major surface 5g of the IGU 5 is positioned at a distance of less than 80 % of a total height of the first leg 15 from a lower end of said first leg. As can also be seen, the sash side member 14 has a first leg 15 extending next to or lateral to and along the first peripheral side 5a of the IGU 5. The sash side member 14 has a second leg 16 projecting from a lower end 15a of the first leg 15.

[0183] The first sash side member 14 further has a third leg 17 projecting from an inner end 16b of the second leg 16 in a downwards direction away from the interior major surface 5b of the IGU 5 to provide a lower supporting surface 17a which in the closed position of the window 1 rests on a corresponding upper resting surface 7a of the frame side member 10.

[0184] At an upper end the third leg 17 includes a resting surface 16a on which said interior major surface 5b of the IGU 5 rests. The upper resting surface 16a of the third leg 17 is provided as an upper resting surface 16a of a sealing member 22, which is manufactured from a plastic material and extends in the longitudinal direction L in substantially an entire length in the longitudinal direction L of the first peripheral side 5a of the IGU 5 or of the third leg 17. The sealing member 22 is a separate part attached in a slot of the remaining part og the third leg 17. Thus, not an entire upper surface of the third leg 17 constitutes the upper resting surface 16a of the third leg 17. The upper resting surface 16a and/or the sealing member may alternatively be moved further to the left in Fig. 2 and instead form part of the second leg 16.

[0185] All four sash side members have the structure as described for the sash side member 14 and the corresponding or associated four frame side members have the same structure as the frame side member 10.

[0186] The third leg 17 comprises the substantially only supporting surface or supporting point or area of the sash side member 14 on the frame 7 in the closed position of the skylight window 1. Similarly, corresponding third legs of the remaining three sash side members each comprises the substantially only supporting surface or supporting point of the respective sash side member on the frame 4 in the closed position of the skylight window 1.

[0187] Other contact points or contact surfaces between the sash 6 and frame 7 in the closed position of the skylight window 1, which contact surfaces are not carrying any substantial amount of the weight of the sash 6 (and IGU and weather shield 3) in the closed position of the skylight window 1, may include not shown sealing members between associated sash and frame side members. These sealing members may be attached in holding members 50, 19, 20 of the sash side member 14 as shown in Fig. 2.

[0188] Fig. 4 is a cross-sectional side view showing a detail of the window 1 according to Fig. 1 taken along the line IV-IV of Fig. 1, the cross sectional plane extending normal to the length dimension and being the same as in Fig. 2. Compared to Fig. 2, Fig. 4 thus shows the frame side member 18 opposed to the frame side member 10 and the sash side member 13 opposed to the sash side member 14. These latter side members 18, 10, 13, 14 all extend in parallel with each other. The side members 13, 18 are mirrored versions of the side members 14, 10, respectively.

[0189] Note that the view of Fig. 2 only shows the elements of the window 1 which are visible or present in the cross section, i.e. which are cut through, whereas in the view of Fig. 4 also elements behind the cross section are visible.

[0190] In Fig. 4 a conventional rotary hinge 21 of the window 1 is shown, which connects upper parts of the frame side member 18 and the sash side member 13 with each other so as to enable a rotary movement of the sash 6 (and IGU 5 and weather shield 3) in relation to the frame 7 along a rotary axis in a conventional manner. This rotary movement opens the window 1 in a conventional manner. The sash 6 is thus movable in relation to the window frame 7 which is accomplished by the sash 6 being top-hung, i.e. being rotatable about the rotary axis extending along the sash side member 13. This is achieved using the rotary hinge 21 positioned at this sash side member 13 and connecting this sash side member 13 with the associated, adjacent frame side member 18.

[0191] The rotary hinge 21 establishes an indirect contact point between sash 6 and frame 7, which also carries part of the weight of the sash 6 in both the closed and especially in the open position of the skylight window 1.

[0192] Referring to Fig. 2, the lower supporting surface 17a of the third leg 17 is abuts an abutment element 78 in the closed position of the window 1, which abutment element 78 is a separately provided element forming part of the frame 7 and which is attached to the remaining parts of the frame 7. This abutment element 78 is provided at or in an inner corner of the frame side member 10.

[0193] The IGU 5 in a conventional manner comprises three layers of glazing 5c, 5d, 5e positioned at a respective distance from each other to form respective spacings or cavities between them. These spacings are in a conventional manner filled with a gas to improve insulation. The lower surface 5b is a lower major surface of the lowermost glazing layer 5e. Sealing and supporting members 23, 24 are provided at the peripheral side 5a of the IGU 5 between the layers 5c, 5d, 5e of glazing so that outer sides of the layers 5c, 5d, 5e and the members 23, 24 define a side or lateral surface 5f of the IGU 5. This side surface is substantially plane and extends substantially in the height dimension shown in Fig. 2. The members 23, 24 distance respective adjacent layers 5c, 5d, 5e from each other.

[0194] The IGU 5 has a rectangular shape and has further second to fourth peripheral sides that each extends linearly along substantially a total extent of a corresponding respective sash and frame side member in a similar manner as described above for the sash side member 14.

[0195] The exposed interior major surface 5b of the IGU 5 extends in an outwards direction. The interior Major surface of the IGU is substantially parallel in the closed position of the window 1 with a plane defined by the upper surface of the roof 2 surface, i.e. it is a substantially horizontal plane in the closed position of the window 1.

[0196] The first leg 15 is positioned adjacent to and laterally from the side surface 5f of the first peripheral side 5a of the IGU 5. The second 16 and third 17 legs are positioned adjacent to the interior major surface 5b of the IGU 5. The first leg 15 extends along the side surface 5f, the latter having an angle to the interior major surface 5b of the IGU 5 or to the interior Major surface of the IGU of approximately 90 degrees.

[0197] Each of the first 15, second 16 and third 17 legs are substantially plate-shaped and have a flat shape so that they together form a step where an upper surface of the second leg is denoted a step surface 16c. Each of the legs 15, 16, 17 has an oblong shape.

[0198] Referring to Fig. 2, in relation to the sash side member 14, a length dimension is defined as a dimension in which said longitudinal direction L extends, a height dimension is defined as a direction perpendicular to the length dimension and to the interior Major surface of the IGU, and a width dimension is defined as a dimension perpendicular to the height and length dimensions. The width and length dimensions are parallel to the interior Major surface of the IGU. Whereas the longitudinal direction L extends in the length dimension, the width and height dimensions extend in transverse or radial directions.

[0199] As can be seen in Fig. 2, the first leg 15 extends more than 3 times longer in the height dimension than in the width dimension. The second leg 16 extends more than 3 times longer in the width dimension than in the height dimension. The third leg 17 extends more than 3 times longer in the height dimension than in the width dimension. The second leg 16 extends about 2 times longer in the width dimension than the first leg 15 and about 3 times longer in the width dimension than the third leg 17. The extent in the length dimension of the legs 15, 16, 17 is substantially equal to the extent of the first peripheral side 5a of the IGU 5 in the length dimension. The extents measured in this context are a total or largest extent of the leg 15, 16, 17 in question in the relevant dimension. The second leg 16 projects from a surface 15b of the first leg 15, which surface 15b extends substantially in the height dimension and faces the IGU 5, and the third leg 17 projects from a surface 16d of the second leg 16, which surface 16d extends substantially in the height dimension and is substantially perpendicular to the interior major surface of the IGU.

[0200] An angle between the first 15 and second 16 legs and between the second and third legs 17 is substantially 90 degrees, respectively.

[0201] The first leg 15 is formed integrally with the second leg 16, and the second leg is formed integrally with the third leg 17.

[0202] The inner or distal end 16b of the second leg 16 is positioned oppositely from an outer or proximal end 16e of the second leg 16, said outer end 16e being connected to the first leg 15 at a location from which the second leg 16 projects.

[0203] The four frame side members form a substantially rectangular shape and, similarly, the four sash side members form a substantially rectangular shape. A rectangular shape of the four sash side members is smaller than a rectangular shape of the four frame sash side members. The frame 7 encloses the sash 6 in the closed position of the skylight window 1.

[0204] Associated frame and sash side members are positioned to be substantially parallel to each other in both the open and closed positions of the skylight window 1.

[0205] The first 15 and third 17 legs project in substantially opposite directions from the second leg 16, these opposite directions both being substantially in the height dimension.

[0206] The IGU 5 comprises an exposed exterior major surface 5g positioned oppositely from the interior major surface 5b and facing outwardly, i.e. towards the outside, in the installed positioned of the skylight window 1. The exterior major surface 5g extends in an outwards direction. The exterior major surface 5g is substantially parallel with and has substantially the same shape and size as the interior major surface 5b of the IGU 5. A distance between the two major surfaces 5b and 5g of the IGU define a thickness of the IGU 5, which distance is thus measured in the height dimension.

[0207] The first leg 15 extends about 100 % of the distance between said exterior and interior major surface of the IGUs in the upward direction from the exterior major surface of the IGU.

[0208] The first leg 15 does not extend to cover said exterior major surface of said IGU. No part of the sash 14 and frame 10 extends along the exterior major surface of the IGU 5. In the latter context, the fixation member 30 mentioned below is not considered part of the sash 14. The direction away from the interior major surface 5b of the IGU 5, in which direction the third leg 17 projects, extends substantially in the height dimension and extends downwards, i.e. towards the interior the building in the installed position of the skylight window 1.

[0209] The lower supporting surface 17a of the third leg 17 forms part of the third leg 17.

[0210] The first frame side member 10 comprises a primary leg 25 with a surface 25b extending next to and along a side surface 15c of the first leg, said side surface 15c facing substantially away from the first peripheral side 5a of the IGU 5, and a secondary leg 26 extending along a surface 16f of said the second leg 16, which surface 16f faces substantially away from the interior major surface 5b of the IGU 5. The secondary leg 26 is connected to the primary leg 25 along a lateral side surface 26f of the primary leg 25. The second leg 16 extends as far as or somewhat farther than the secondary leg 26 in the inward direction. A stepped configuration of adjacent surfaces of the first sash 14 and frame 10 side members is thus achieved by means of the stepped configuration of the first sash side member 14 as described and an associated stepped structure of the first frame side member 10. This stepped structure provides a labyrinth type structure acting to prevent dirt, water and contaminants from entering the interior of the building from an exterior of the building.

[0211] In a cross section perpendicular to the length dimension or to the longitudinal direction L all legs 15, 16, 17, 25, 26, 27 are each substantually shaped as a rectangle. However, the first leg 15 is substantially shaped as a trapezoid or a trapezium, a surface 15c of the first leg 15 in the closed position of the window 1 extending along the surface 25b of the primary leg 25, both surfaces being inclined with about 5 degrees with respect to the height dimension. This inclination is in an outward and upward direction. The downward direction is the direction in the height dimension towards which the interior major surface 5b of the IGU 5 faces. The upward direction is a direction opposite to the downward direction. An inward direction is a direction in the width dimension towards a centre of the IGU 5 or towards the opposing sash side member 13, and the outward direction is a direction opposite to the inward direction. A surface 15d of the first leg 15 extends along an upper surface 26b of the secondary leg 26 extends substantially in the width dimension. The surface 26b is substantially parallel to the surface 15d in the closed position of the window. The surface 15d of the first leg 15 connects the two surfaces 15b, 15c of the first leg 15. The third leg 17 comprises a side surface 17b facing a surface 26a of the secondary leg 26 and extends at an angle of about 5 degrees in relation to the height dimension. The surfaces 15c, 25b, 17b, 26a extend substantially in parallel in the closed position of the window 1.

[0212] The second leg 16 comprises a first lateral side surface 16g facing and attached to the first leg 15 and extending substantially in the height dimension. The opposite, substantially parallel side surface 16d faces and is attached to the third leg 17.

[0213] The first leg has a height in the height dimension of more than 2.5 times the thickness of the IGU 5.

[0214] The lower supporting surface 17a of the third leg 17 abuts an upper resting surface of the abutment element 78 in the closed position of the window 1.

[0215] All sash and frame side members each have a substantially uniform cross section along a length of these in the longitudinal direction L.

[0216] A base structure of the frame and sash side members is substantially of fiber-reinforced PVC. This base structure is a grid or hollow core structure with several hollow inside spacings or cavities surrounded by thin layers or plates of PVC, which plates are connected to each other at corners thereof such as to form a shell structure surrounding the spacings. Two of the core spacings of the first frame side member each comprise an insulating stiffening filler member 25a, 25b, see Fig. 2, which consist of a foamed polymer material. The plates of material of the sash side member 14 and the frame side member 10 are extruded each in one piece, these pieces subsequently respectively being attached to the other of the sash and frame side members, respectively, at ends thereof to form the sash 6 and frame 7.

[0217] The first leg 15 comprises on the surface 15b two grooves 28, 29, the first groove 28 being positioned at a first distance from the interior IGU plane, the second groove 29 being positioned at a second, smaller distance from the interior Major surface of the IGU. The first and

second grooves 28, 29 are adapted for receiving a fixation member 30 which can be attached to or snap-locked to either one of the two grooves 28, 29, abutting the exterior major surface of the IGU 5 so as to hold the IGU 5 along said first peripheral side 5a thereof, especially in the upward direction. The fixation member 30 is positioned in the groove 28 in the shown embodiment. Hereby the IGU 5 may be exchanged with an IGU of smaller thickness by switching the fixation member 30 to the other groove 29. The fixation member 30 is manufactured of a plastic and sealing material and comprises a projection adapted to be in abutment with the upper or exterior major surface 5g of the IGU 5 such as to hold this in place against the upper resting surface 16a. The fixation member 30 extends substantially along an entire length (in the longitudinal direction L) of the sash side member 15 and the first peripheral side 5a of the IGU 5. Similar fixation members are attached to similar grooves of the one, two or three of the other sash side members at the other three peripheral sides of the IGU 5.

[0218] The primary leg 25 extends about 50 percent of a distance between said exterior and interior Major surface of the IGUs, i.e. the thickness of the IGU 5, in the upward direction from the exterior Major surface of the IGU.

[0219] A chain drive or the like (not shown) may be provided connecting the sash 6 and frame 7 for assisting in opening and closing the skylight window 1.

[0220] The sash side member 14 has a fourth leg 31 projecting from an upper end 15e of the first leg 15 in the outward direction away from the IGU 5 in the width dimension. The fourth leg 31 is in the closed position of the window 1 positioned above the primary leg 25 of the frame side member 10 as shown in Figs 2 and 3. A width of the fourth leg 31 substantially corresponds to a width of the primary leg 25.

[0221] As is the case for the legs 15, 16, 17, the fourth leg 31 is substantially overall plate-shaped and has a flat shape so that an upper surface thereof forms a further overall step surface similar to and potentially extending substantially in parallel with the step surface 16c of the second leg 16.

[0222] The fourth leg 31 has an oblong shape in the width dimension and extends more than 3 times longer in the width dimension than in the height dimension. The extent in the length dimension of the fourth leg 31 is substantially equal to about equal to or somewhat longer than the extent of the first peripheral side 5a of the window pane 5 in the length dimension.

[0223] An angle between the first 15 and fourth 31 is substantially 90 degrees.

[0224] The fourth leg 31 is formed integrally with the first leg 15.

[0225] The fourth and second legs 31, 16 extend or project substantially in parallel.

[0226] In the cross section shown the fourth leg 31 is substantually shaped as a rectangle or, more specifically, as a trapezoid or a trapezium, a surface 31b of the fourth leg 31 extending substantially along an upper surface 25c of the primary leg 25 being inclined with about 5 degrees with respect to the width dimension and being parallel to the upper surface 25c. This inclination is in the downward and outward direction. The fourth leg 31 further comprises a first imaginary lateral side surface 31c facing and attached to (integral with) the first leg 15 and extending substantially in the height dimension, and an opposite, substantially parallel side surface 31d that faces in the outward direction. The upper surface 31a of the fourth leg 31 extends substantially in the width dimension and connects the two parallel surfaces 31d, 31c. Note that when the surfaces in question comprise slots, projections, indentations or the like, the dimension in which the surface is said to extend is an overall surface without taking such irregularities into account.

[0227] The fourth leg has an overall or total height in the height dimension less than the thickness of the IGU 5.

[0228] As can be seen in Fig. 2, the IGU 5 extends in the width dimension from an inner surface 17c of the third leg 17 towards the first leg 15 to farther than half of an accumulated width of the first, second and third legs 15, 16, 17. This accumulated width is equal to a total extent of the legs 15, 16, 17 in the width dimension.

[0229] The interiormajor surface of the IGU is positioned at a distance of less than 45 % of a total height of the first leg 15 from said lower end 15a of said first leg 15 to said top end 15e.

[0230] The interior major surface of the IGU is positioned at a distance of less than 40 % of the total height of the first leg 15 from said lower end 15a of said first leg 15, more specifically the lower surface 15d.

[0231] The third leg 17 has an oblong shape in the height dimension so that the height of the third leg 17 is more than 3 times longer than the width thereof. The third leg 17 extends in the height dimension more than 4 times a height of the second leg 16. The third leg 17 has a height of about 0.5 times a height of the first leg 15. The height of the third leg 17 is about equal to the width of the second leg 16.

[0232] The secondary leg 26 of the frame side member 10 comprises a side surface 26a, which extends substantially in the height dimension, but with a small inclination, and which faces, and is placed next to and extends along the side surface 17b of the third leg 17. The side surface 26a faces substantially in the outwards direction. The side surfaces 17b, 26a are substantially parallel to each other in the closed position of the window, are inclined with about 5 degrees in relation to the height dimension and extend in the length dimension along substantially a total extent of the sash and frame side members 10, 14 in the longitudinal direction L.

[0233] The frame side member 10 comprises a tertiary leg 27, which comprises the abutment element 78 with the corresponding upper resting surface 7a of the frame side member 10 on which the lower supporting surface 17a of the third leg 17 rests in the closed position of the window.

[0234] The tertiary leg 27 is in the closed position of the window 1 positioned below and partly to the outward side of the third leg 17. A width of the tertiary leg 27 is about half of a width of the third leg 17.

[0235] The tertiary leg 27 is also substantially plate-shaped and has a flat shape, an upper surface thereof on which the abutment element 78 is positioned forming a further step surface 27a similar to and potentially extending substantially in parallel with the step surfaces 25c, 26b of the primary 25 and secondary 26 legs.

[0236] The tertiary leg 27 has an oblong shape in the height dimension and extends more than 3 times longer in the height dimension than in the width dimension. The extent in the length dimension of the tertiary leg 27 is substantially equal to the extent of the first peripheral side 5a of the IGU 5 in the length dimension. The tertiary leg 27 projects from a surface of the secondary leg 26, said surface extending in the width dimension and facing inwardly.

[0237] An angle between the secondary leg 26 and the inward direction in which the tertiary leg 27 extends is substantially 90 degrees.

[0238] The part of the tertiary leg 27 that does not include the abutment element 78 is formed integrally with the secondary leg 26.

[0239] The tertiary leg 27 and third leg 17 extend substantially in parallel in the closed position of the window.

[0240] In the cross section shown in Fig. 2 the tertiary leg is substantially shaped as a trapezoid or a trapezium, an inwardly facing surface 27b of the tertiary leg 27 being inclined about 5 degrees with respect to the height dimension. This inclination is in the inward and upward directions. The tertiary leg 27 further comprises a lateral side surface 27c facing and attached (integral with) a lower part of the side surface 26a of the secondary leg 26 and extending substantially in the height dimension. The upper surface 27a of the tertiary leg 27 extends substantially in the width dimension and connects the two lateral side surfaces 27b, 27c thereof.

[0241] An inwardly facing interior surface 40 located below the interior major surface 5b is provided in the form of the surfaces 17c, 27b. An angle α (Fig. 2) formed between said inwardly facing interior surface 40 and the interior major surface 5b or the interior major surface of the IGU at an interior corner formed between said surfaces is about 90 or 95 degrees.

[0242] The tertiary leg 27 has a height in the height dimension less than the thickness of the IGU and less than that of the first, third, primary and secondary legs 15, 17, 25, 26.

[0243] The abutment element 78 is provided as part of the tertiary leg 27 so that the abutment element 78 provides the upper resting surface 7a of the frame side member 10 on which the lower supporting surface 17a of the third leg 17 rests in the closed position of the skylight window 1.

[0244] The abutment element 78 extends along substantially a total length of the frame and sash frame side members 7, 6 and substantially along a total length of the third leg 17 and the lower supporting surface 17a of the third leg 17, these lengths being in the length dimension.

[0245] The abutment element 78 is a separate part attached to the remaining parts of the tertiary leg 27. The abutment element 78 comprises the resting surface 7a in the form of an abutment surface 7a, on which the supporting surface 17a of the third leg 17 rests in the closed position of the skylight window 1. The abutment surface 7a is in a position, in which the third leg 17 does not rest on it, inclined with an angle of about 15 degrees with respect to the height dimension and extends substantially linearly. When the sash side member 14 rests on the abutment element 78, the abutment element 78 is somewhat deformed since it to some extent gives in to the weight of the sash 6 as shown in Fig. 2. This inclined abutment surface 7a helps positioning and centering the sash 6 in the frame 7 during the closing movement. The supporting surface 17a of the third leg 17 comprises part of the outer side surface 17b of the third leg 17 as well as part of a lower surface 17d of the third leg 17, these outer and lower surfaces 17b, 17d of the third leg 17 forming a lower, outer corner of the third leg 17. Hereby the third leg 17 and thus the sash side member 14 are held by the abutment element 78 both in the width dimension (outwardly) and in the height dimension (downwardly). Holding the sash side member 14 in the width dimension helps centering the sash 6 in the frame 7 in the closed position of the skylight window 1, especially since all sash and frame side members are provided with a similar configuration.

[0246] The abutment element 78 forms a seal covering an opening or slot that would otherwise be provided between the third leg 17 and the tertiary leg 27 in the closed position of the skylight window 1.

[0247] The abutment element 78 is of an elastic, plastic and sealing material.

[0248] Similar abutment elements are provided in a similar manner on the remaining frame side members. The abutment elements form the only or substantially the only resting point or resting surface of the sash 6 (including the window pane 5 and the weather shield 3) on the frame 7 in the closed position of the skylight window 1.

[0249] The skylight window 1 further comprises the weather shield 3 positioned so as to protect the window portion 4 of the skylight window 1, the window portion 4 comprising the sash 6, frame 7 and IGU 5.

[0250] The weather shield 3 comprises the weather shield pane 8 that is surrounded by the weather shield skirt 9 that extends on an outer side of all four sides of the frame 7, i.e. of the respective frame side members, see Fig. 1. The weather shield 3 is provided as a unitary structure, which is separate from and detachably attached to the window portion 4, specifically to the sash 6 so as to move together with the sash 6 during the opening and closing movement thereof. The weather shield 3 is mounted on the window portion 1 for covering and

weather protecting the window portion 4 in the installed state of the skylight window 1. The weather shield pane 8 comprises only one single layer of glazing.

[0251] The skirt 9 of the weather shield 3 is attached to each of the fourth legs of the four sash side members.

[0252] Roofing felt (not shown) may in a conventional manner be positioned to seal between outer surfaces of the frame 7 and a roof opening in the roof 2, which opening the window 1 is positioned to cover. These outer surfaces of the frame 7 are formed by a curb flange of the frame 7. In Fig. 2 a curb flange 40 of is shown, The curb flange is detachably attached to the frame side member 10. Similar curb flanges are provided at the remaining frame side members.

[0253] Fig. 6 shows an alternative embodiment of the frame side member 10 of the embodiment of Figs 1 to 4, which is different only in that a cover leg 32 is attached to the frame side member 10. The cover leg 32 covers the third leg 17 in the closed position of the skylight window 1 so as to hide the third leg 17 completely when seen from the interior of the building.

[0254] The cover leg 32 extends in the longitudinal direction along substantially an entire length of the first leg 17 and/or the sash side member 14.

[0255] The cover leg 32 extends from the inward surface 27b of the tertiary leg 27. The cover leg 32 and the secondary 26 and tertiary 27 legs of the frame side member 14 establish a longitudinally extending groove 33 with the secondary leg 26 and the cover leg 32 defining sides thereof and the tertiary leg 27 defining a bottom thereof, and into which the third leg 17 of the sash side member 14 is inserted and embedded when the sash 6 moves to the closed position of the skylight window 1.

[0256] Fig. 6 shows an example where the sash side member 14 comprises a first leg 15 extending in a substantially upwards direction with a second leg 16 projecting in an inwards direction from a lower end of the first leg 17. The second leg 16 comprises a supporting section 72 which is adhered to the exposed exterior major surface 5g of the IGU 5 by an adhesive 74, the adhesive is a silane-terminated polyurethane (SPUR) adhesive, but may a silyl modified-polymer (SMP) adhesive or any other suitable adhesive may also be used. The adhesive may also be provided as an adhesive tape. A third leg 17 projects from an upper end of the first leg 15 in an outwardly direction where a fourth leg 31 projects from an outer end of the third leg 17 in an upwards direction.

[0257] The window is provided with a curb flange 40 that can be attached and detached to suit the given installation scenario such as installation in a flat or inclined roof, or installation of two or more skylight windows 1 adjacent to each other.

[0258] The exposed interior major surface 5b of the IGU 5 abuts a sealing element 22 on the frame side member 10. That is, sealing between the IGU 5 and the frame, is achieved by a sealing element 22, sealing directly against the IGU 5. This allows the skylight window 1 to be provided without a sash side member extending along the exposed interior major surface 5b of the IGU 5 to seal against a frame side member. Thus the IGU 5 is positioned lower in the window structure i.e. closer to the interior of the building in which the window 1 is installed. Fig. 7 shows another example of this where a second leg 16 of the first sash side member 14 supports the IGU 5 on its exposed interior major surface 5b.

[0259] Referring in particular to Fig.8, it shows another example of a cross-section, where the IGU 5 is supported by a supporting section 72 on the interior major surface 5b.

[0260] The bottom surface 10a has a protrusion 10e protruding away from the IGU 5, with a first surface 10c for a lining or reveal panel (not shown).

[0261] A first insulation member 81, potentially of EPS, is positioned between the IGU 5 and the first frame side member 10 in the outwards direction to improve the insulation of the skylight window. The first insulation member 81 is in contact with a first and a second surface of the frame side member 10 and is between the first frame side member 10 and the first sash side member 14 in the height direction. Sealing members 14a fastened on the sash seals gaps between the first frame side member 10 and the first sash side member. A cover 80 on the sash creates a funnel like effect for the skylight window, directing light from the exterior towards the interior with an angled surface relative to the height direction. The weather shield 3 is substantially flat and the weather shield comprises a weather shield skirt 9 along the peripheral sides of the weather shield pane 8.

[0262] In Fig. 8 the IGU 5 is depicted in a schematic manner, which may represent an IGU 5 as shown in any of the previous embodiments.

[0263] Referring to Fig. 9, the most exterior IGU pane 5c, having the exterior major surface 5g of the IGU 5, also acts as the weather shield pane 8. Thus, the weather shield is made up of the most exterior pane 5g of the IGU and the weather shield skirts 9. This allows for the IGU 5 to be positioned high, in the height direction, in the skylight window 1 and makes it possible to have the lining panel protrusion 10e above the bottom surface 10a, in the height direction, of the first frame side member. Thus, the top end of the lining panel 50 is above the bottom surface 10a. At the top of the lining panel protrusion 10e, a sealing member 22 abuts to the IGU and hereby hides the first side member for a viewer viewing the skylight window, in an installed position, from the interior towards the exterior. The sash 14 being in the space between the first frame side member 10, the IGU 5 and the weather shield 3. The top pane of the IGU 5c is larger than the other panes of the IGU 5 in the plane of the interior major surface 5b of the IGU. Fig. 10 shows similar example of this where the lining panel protrusion is moved close to the IGU only separated by a small sealing member 22.

[0264] Fig. 11 shows a perspective view of an embodiment of the skylight window 1 according to the present invention installed in a roof 2 (not shown), where a part of the window has been removed for illustration purpose.

The window frame 7 and the window sash 6 correspond to the ones shown in Fig. 8. The weather shield pane 8 here has been removed for clarity. Fig. 11 also shows a screening device 34, which is mounted in a spacing delimited in the width direction W by the first 14 and second sash side members. It is to be understood that the second sash member is substantially identical to the first sash side member 14 so that the exterior sides of the sash side members together define an exterior side of the sash 6 which extends substantially in parallel to the exterior major surface 5g of the IGU 5.

[0265] Towards the interior the spacing is delimited in Fig. 11 by the step surface 17c formed by the third leg 17 of the first sash side member 14. The step surface 17c thus serves as a screening device support section extending from the first leg 15. The screening device 34 is here depicted as a roller curtain in which the screening body 36 is a covering cloth, which at least partially rolled up on a collection device 35 in the form of a collection roller in the first non-screening, end position, but which is here shown in a second, screening end position, where it is extended towards the second sash side member for covering the IGU 5. The screening device 34 might, however, also be another type of blind or a shutter. In Fig. 11, also a fixation member 39 is attached to the first sash side member 14 and extending towards the second sash side member. The fixation member 39 contributes to retaining a top casing of the screening device 34 by preventing it from moving upwards, away from the exterior major surface 5g of the IGU.

Claims

1. A skylight window (1) for being installed in a roof of a building, the skylight window (1) comprising:

   a window frame (7) having four frame side members (10, 11, 18),
   a window sash (6) having four sash side members (12, 13, 14) supporting an insulating glazing unit (5), abbreviated as IGU, having multiple layers of glazing, said window sash (6) being movable in relation to the window frame (7) between an open and a closed position of the skylight window (1), and
   a weather shield (3) comprising a weather shield pane (8) positioned on an exterior side of the IGU (5),
   a first of the frame side members (10) being associated with a first of the sash side members (14), each of said first frame and sash side member (10, 14) extending in a respective longitudinal direction substantially in parallel with a first peripheral side (5a) of the IGU (5),
   said IGU (5) having an exposed interior major surface (5b) for facing an interior of said building in an installed position of the skylight window (1), said interior major surface (5b) extending in an outward direction away from a center of the IGU (5), an inward direction extending in a direction opposite to said outward direction,
   said IGU (5) further having an exposed exterior major surface (5g) for facing in an exterior direction which is opposite of said interior of said building in said installed position of the skylight window (1), said exterior major surface (5g) extending in the outward direction, an upward direction being defined as extending away from at a right angle to said exterior major surface of the IGU (5g),
   said first frame side member (10) having a primary leg (25), which in said closed position of the skylight window (1) is positioned lateral to and extends along an outwardly facing surface of said first peripheral side (5a) of the IGU (5), and a secondary leg (26), which in said closed position of the skylight window (1) extends lateral to and along a part of said interior major surface (5b) of the IGU (5), a height direction extending from the exposed interior major surface (5b) towards the exposed exterior major surface (5g),
   said secondary leg (26) having a bottom surface (10a) facing in a direction away from the interior major surface (5b) of the IGU (5), which bottom surface (10a) comprises a lining panel protrusion (10e) located lower than the exposed interior major surface (5b) of the IGU (5) in the height direction,
   wherein the lining panel protrusion protrudes (10e) away from the IGU (5), the lining panel protrusion (10e) comprising a first surface (10c) for abutting an inwardly facing surface of said reveal panel or lining panel when received by said protrusion (10e),
   characterized in that
   said first peripheral side (5a) of the IGU (5) is located, in said outward direction, beyond said first surface (10c) of said protrusion (10e).

2. A skylight window (1) according to claim 1, wherein a transparent central area of the IGU (5) extends, in said outward direction, beyond said first surface (10c) of said protrusion (10e).

3. A skylight window (1) according to any one of the previous claims, wherein said first peripheral side (5a) of the IGU (5) is located at, and a transparent central area of the IGU (5) potentially extends, a distance in said outward direction from said first surface (10c) of said protrusion (10e) equal to or above 5, 10, 15, 20, or 25 percent of an extent in the outward direction of the secondary leg (26) between said first surface (10c) of said protrusion (10e) and an outwardly outermost surface of said secondary leg (26).

4. A skylight window (1) according to any one of the previous claims, wherein an upper part of a reveal panel or lining panel is received by said protrusion (10e), said first surface (10c) of said protrusion (10e) abutting said inwardly facing surface of said reveal panel or lining panel.

5. A skylight window (1) according to any of the previous claims, the skylight window (1) further comprising a second protrusion next to the first protrusion to create a lining panel recess (10b) for receiving a lining panel to be installed.

6. A skylight window (1) according to any one of the previous claims, wherein said first sash side member (14) has a first leg (15), which extends substantially in the upward direction.

7. A skylight window (1) according to claim 5, wherein said first leg (15) extends next to said outwardly facing surface of said first peripheral side (5a) of the IGU (5), and wherein the primary leg (25) in said closed position extends next to and along an outwardly facing surface of said first leg (15).

8. A skylight window (1) according to any one of claims 5 to 7, wherein the first sash side member (14) further comprises a second leg (16), which may potentially project from a lower end of said first leg (15) so as to extend along part of said interior major surface (5b) of the IGU (5) to support the IGU (5), said second leg (16) potentially resting on an upper abutment surface of said secondary leg (26) in said closed position of said window (1).

9. A skylight window (1) according to any one of the previous claims 5 to 8, wherein said first sash side member (14) further has a third leg (17) projecting from an upper end of said first leg (15) and extending in said outward direction and, optionally, a fourth leg (31) projecting from said third leg (17) and extending substantially in said upward direction and, optionally, a fifth leg projecting from said fourth leg (31) substantially in said outward direction.

10. A skylight window (1) according to any one of claims 5 to 8, wherein said exterior major surface (5g) of the IGU (5) is positioned at a distance of less than 80 % of a total height of the first leg (15) from a lower end of said first leg (15).

11. A skylight window (1) according to any one of the preceding claims, wherein the skylight window (1) is installed potentially in or on a flat or inclined roof of a building to cover a roof opening of the roof, said interior major surface (5b) of the IGU (5) facing an interior of the building.

12. A skylight window (1) according to any of the previous claims, wherein the weather shield (9) comprises a transparent or translucent weather shield pane (8).

13. A skylight window (1) according to any of the previous claims, wherein the weather shield (9) is without a sealed gas-filled spacing between the weather shield pane (8) and the IGU (5).

14. A skylight window (1) according to any of the preceding claims, wherein the exterior weather shield (9) comprises a weather shield pane (8) attached to the window frame (7) so as to protect a window portion (4) of the skylight window, the window portion (4) comprising the frame (7) and the IGU (5).

Patentansprüche

1. Dachfenster (1) zum Einbau in ein Dach eines Gebäudes, wobei das Dachfenster (1) Folgendes umfasst:

einen Fensterrahmen (7), der vier Rahmenseitenelemente (10, 11, 18) aufweist,
einen Fensterflügel (6), der vier Flügelseitenelemente (12, 13, 14) aufweist, die eine Mehrscheibenisolierglaseinheit (5), kurz MIG, tragen, die mehrere Glasschichten aufweist, wobei der Fensterflügel (6) in Bezug zum Fensterrahmen (7) zwischen einer geöffneten und einer geschlossenen Stellung des Dachfensters (1) beweglich ist, und
einen Wetterschutz (3), der eine Wetterschutzscheibe (8) umfasst, die an einer Außenseite der MIG (5) angeordnet ist,
wobei ein erstes der Rahmenseitenelemente (10) einem ersten der Flügelseitenelemente (14) zugeordnet ist, wobei sich das erste Rahmen- und Flügelseitenelement (10, 14) jeweils in eine jeweilige Längsrichtung im Wesentlichen parallel zu einer ersten Umfangsseite (5a) der MIG (5) erstreckt,
wobei die MIG (5) eine freiliegende innere Hauptfläche (5b) aufweist, die in der eingebauten Stellung des Dachfensters (1) dem Inneren des Gebäudes zugewandt ist, wobei sich die innere Hauptfläche (5b) von der Mitte der MIG (5) weg in eine Auswärtsrichtung erstreckt, wobei sich eine Einwärtsrichtung der Auswärtsrichtung entgegengesetzt erstreckt,
wobei die MIG (5) ferner eine freiliegende äußere Hauptfläche (5g) aufweist, die der Außenrichtung zugewandt ist, die in der eingebauten Stellung des Dachfensters (1) dem Inneren des Gebäudes zugewandt ist,
wobei sich die äußere Hauptfläche (5g) in Auswärtsrichtung erstreckt, wobei eine Aufwärts-

richtung derart definiert ist, dass sie sich in einem rechten Winkel zur äußeren Hauptfläche (5g) der MIG weg erstreckt, wobei das erste Rahmenseitenelement (10) einen primären Schenkel (25), der in der geschlossenen Stellung des Dachfensters (1) seitlich von einer auswärts gewandten Fläche der ersten Umfangsseite (5a) der MIG (5) angeordnet ist und sich daran entlang erstreckt, und einen sekundären Schenkel (26), der sich in der geschlossenen Stellung des Dachfensters (1) seitlich zu und entlang eines Teils der inneren Hauptfläche (5b) der MIG (5) erstreckt, umfasst, wobei sich die Höhenrichtung von der freiliegenden inneren Hauptfläche (5b) zur freiliegenden äußeren Hauptfläche (5g) erstreckt,
wobei der sekundäre Schenkel (26) eine untere Fläche (10a) aufweist, die von der inneren Hauptfläche (5b) der MIG (5) abgewandt ist, wobei die untere Fläche (10a) einen Verkleidungsplattenvorsprung (10e) umfasst, der in Höhenrichtung niedriger als die freiliegende innere Hauptfläche (5b) der MIG (5) angeordnet ist,
wobei der Verkleidungsplattenvorsprung (10e) von der MIG (5) weg vorsteht, wobei der Verkleidungsplattenvorsprung (10e) eine erste Fläche (10c) umfasst, um bei der Aufnahme durch den Vorsprung (10e) an eine einwärts gewandte Fläche der Laibungsplatte oder Verkleidungsplatte anzuschlagen,
dadurch gekennzeichnet, dass
die erste Umfangsseite (5a) der MIG (5) in Auswärtsrichtung über die erste Fläche (10c) des Vorsprungs (10e) hinaus angeordnet ist.

2. Dachfenster (1) nach Anspruch 1, wobei sich ein transparenter Mittelbereich der MIG (5) in Auswärtsrichtung über die erste Fläche (10c) des Vorsprungs (10e) hinaus erstreckt.

3. Dachfenster (1) nach einem der vorstehenden Ansprüche, wobei die erste Umfangsseite (5a) der MIG (5) in Auswärtsrichtung in einer Entfernung von der ersten Fläche (10c) des Vorsprungs (10e) von 5, 10, 15, 20 oder 25 Prozent oder mehr eines Ausmaßes des sekundären Schenkels (26) in die Auswärtsrichtung zwischen der ersten Fläche (10c) des Vorsprungs (10e) und einer auswärts äußersten Fläche des sekundären Schenkels (26) entfernt angeordnet ist und sich ein transparenter Mittelbereich der MIG (5) potenziell daran entlang erstreckt.

4. Dachfenster (1) nach einem der vorstehenden Ansprüche, wobei ein oberer Teil der Laibungsplatte oder Verkleidungsplatte von dem Vorsprung (10e) aufgenommen wird, wobei die erste Fläche (10c) des Vorsprungs (10e) an die Einwärts gewandte Fläche der Laibungsplatte oder Verkleidungsplatte anschlägt.

5. Dachfenster (1) nach einem der vorstehenden Ansprüche, wobei das Dachfenster (1) ferner einen zweiten Vorsprung neben dem ersten Vorsprung umfasst, um eine Verkleidungsplattenvertiefung (10b) zur Aufnahme einer einzubauenden Verkleidungsplatte zu erzeugen.

6. Dachfenster (1) nach einem der vorstehenden Ansprüche, wobei das erste Flügelseitenelement (14) einen ersten Schenkel (15) aufweist, der sich im Wesentlichen in Aufwärtsrichtung erstreckt.

7. Dachfenster (1) nach Anspruch 5, wobei sich der erste Schenkel (15) neben der auswärts gewandten Fläche der ersten Umfangsseite (5a) der MIG (5) erstreckt und wobei sich der primäre Schenkel (25) in der geschlossenen Stellung neben und entlang einer auswärts gewandten Fläche des ersten Schenkels (15) erstreckt.

8. Dachfenster (1) nach einem der Ansprüche 5 bis 7, wobei das erste Flügelseitenelement (14) ferner einen zweiten Schenkel (16) umfasst, der potenziell von einem unteren Ende des ersten Schenkels (15) vorstehen kann, um sich entlang eines Teils der inneren Hauptfläche (5b) der MIG (5) zu erstrecken, um die MIG (5) abzustützen, wobei der zweite Schenkel (16) in der geschlossenen Stellung des Fensters (1) potenziell auf einer oberen Anschlagfläche des sekundären Schenkels (26) aufliegt.

9. Dachfenster (1) nach einem der vorstehenden Ansprüche 5 bis 8, wobei das erste Flügelseitenelement (14) ferner einen dritten Schenkel (17) aufweist, der von einem oberen Ende des ersten Schenkels (15) vorsteht und sich in Auswärtsrichtung erstreckt, und optional einen vierten Schenkel (31), der von dem dritten Schenkel (17) vorsteht und sich im Wesentlichen in Aufwärtsrichtung erstreckt, und optional einen fünften Schenkel, der im Wesentlichen in Auswärtsrichtung vom vierten Schenkel (31) vorsteht.

10. Dachfenster (1) nach einem der Ansprüche 5 bis 8, wobei die äußere Hauptfläche (5g) der MIG (5) in einer Entfernung von weniger als 80 % einer Gesamthöhe des ersten Schenkels (15) von einem unteren Ende des ersten Schenkels (15) angeordnet ist.

11. Dachfenster (1) nach einem der vorstehenden Ansprüche, wobei das Dachfenster (1) potenziell in oder auf einem Flach- oder Schrägdach eines Gebäudes montiert ist, um eine Dachöffnung des Dachs abzudecken, wobei die innere Hauptfläche (5b) der MIG (5) dem Inneren des Gebäudes zugewandt ist.

12. Dachfenster (1) nach einem der vorstehenden Ansprüche, wobei der Wetterschutz (9) eine transparente oder lichtdurchlässige Wetterschutzscheibe (8) umfasst.

13. Dachfenster (1) nach einem der vorstehenden Ansprüche, wobei der Wetterschutz (9) keinen abgedichteten, gasgefüllten Zwischenraum zwischen der Wetterschutzscheibe (8) und der MIG (5) aufweist.

14. Dachfenster (1) nach einem der vorstehenden Ansprüche, wobei der äußere Wetterschutz (9) eine Wetterschutzscheibe (8) umfasst, die am Fensterrahmen (7) befestigt ist, um einen Fensterabschnitt (4) des Dachfensters zu schützen, wobei der Fensterabschnitt (4) den Rahmen (7) und die MIG (5) umfasst.

Revendications

1. Lucarne de toit (1) destinée à être installée dans un toit d'un bâtiment, la lucarne de toit (1) comprenant :

un cadre de lucarne (7) ayant quatre éléments latéraux de cadre (10, 11, 18),
un châssis de lucarne (6) ayant quatre éléments latéraux de châssis (12, 13, 14) supportant une unité de vitrage isolant (5), en abrégé IGU, ayant de multiples couches de vitrage, ledit châssis de lucarne (6) étant mobile par rapport au cadre de lucarne (7) entre une position ouverte et une position fermée de la lucarne de toit (1), et
une protection contre les intempéries (3) comprenant une vitre de protection contre les intempéries (8) positionnée sur un côté extérieur de l'IGU (5),
un premier des éléments latéraux de cadre (10) étant associé à un premier des éléments latéraux de châssis (14), chacun desdits premiers éléments latéraux de cadre et de châssis (10, 14) s'étendant dans une direction longitudinale respective sensiblement parallèle à un premier côté périphérique (5a) de l'IGU (5),
ladite IGU (5) ayant une surface principale intérieure exposée (5b) pour faire face à un intérieur dudit bâtiment dans une position installée de la lucarne de toit (1), ladite surface principale intérieure (5b) s'étendant dans une direction vers l'extérieur dans le plan du toit à l'opposé d'un centre de l'IGU (5), une direction vers l'intérieur dans le plan du toit s'étendant dans une direction opposée à ladite direction vers l'extérieur dans le plan du toit,
ladite IGU (5) ayant en outre une surface principale extérieure exposée (5g) pour faire face à une direction extérieure qui est opposée audit intérieur dudit bâtiment dans ladite position installée de la lucarne de toit (1), ladite surface principale extérieure (5g) s'étendant dans la direction vers l'extérieur dans le plan du toit, une direction vers le haut étant définie comme s'étendant à l'opposé à angle droit de ladite surface principale extérieure de l'IGU (5g),
ledit premier élément latéral de cadre (10) ayant une branche primaire (25) qui, dans ladite position fermée de la lucarne de toit (1), est positionnée latéralement à et s'étend le long d'une surface faisant face vers l'extérieur dudit premier côté périphérique (5a) de l'IGU (5), et une branche secondaire (26), qui, dans ladite position fermée de la lucarne de toit (1), s'étend latéralement à et le long d'une partie de ladite surface principale intérieure (5b) de l'IGU (5), une direction de hauteur s'étendant de la surface principale intérieure exposée (5b) vers la surface principale extérieure exposée (5g),
ladite branche secondaire (26) ayant une surface inférieure (10a) faisant face à une direction à l'opposé de la surface principale intérieure (5b) de l'IGU (5), laquelle surface inférieure (10a) comprenant une saillie de panneau de revêtement (10e) située plus bas que la surface principale intérieure exposée (5b) de l'IGU (5) dans la direction de la hauteur,
la saillie de panneau de revêtement (10e) faisant saillie à l'opposé de l'IGU (5), la saillie de panneau de revêtement (10e) comprenant une première surface (10c) destinée à venir en butée contre une surface faisant face vers l'intérieur dudit panneau de tableau ou dudit panneau de revêtement lorsqu'il est reçu par ladite saillie (10e),
caractérisée en ce que
ledit premier côté périphérique (5a) de l'IGU (5) est situé, dans ladite direction vers l'extérieur dans le plan du toit, au-delà de ladite première surface (10c) de ladite saillie (10e).

2. Lucarne de toit (1) selon la revendication 1, une zone centrale transparente de l'IGU (5) s'étendant, dans ladite direction vers l'extérieur dans le plan du toit, au-delà de ladite première surface (10c) de ladite saillie (10e).

3. Lucarne de toit (1) selon l'une quelconque des revendications précédentes, ledit premier côté périphérique (5a) de l'IGU (5) étant situé à, et une zone centrale transparente de l'IGU (5) s'étendant potentiellement sur, une distance dans ladite direction vers l'extérieur dans le plan du toit depuis ladite première surface (10c) de ladite saillie (10e) égale ou supérieure à 5,10, 15, 20 ou 25 pour cent d'une étendue dans la direction vers l'extérieur dans le plan du toit de la branche secondaire (26) entre ladite première surface (10c) de ladite saillie (10e) et une surface la

plus extérieure vers l'extérieur de ladite branche secondaire (26).

4. Lucarne de toit (1) selon l'une quelconque des revendications précédentes, une partie supérieure d'un panneau de tableau ou d'un panneau de revêtement étant reçue par ladite saillie (10e), ladite première surface (10c) de ladite saillie (10e) venant en butée contre ladite surface faisant face vers l'intérieur dudit panneau de tableau ou dudit panneau de revêtement.

5. Lucarne de toit (1) selon l'une quelconque des revendications précédentes, la lucarne de toit (1) comprenant en outre une seconde saillie à côté de la première saillie pour créer un évidement de panneau de revêtement (10b) pour recevoir un panneau de revêtement à installer.

6. Lucarne de toit (1) selon l'une quelconque des revendications précédentes, ledit premier élément latéral de châssis (14) ayant une première branche (15), qui s'étend sensiblement vers le haut.

7. Lucarne de toit (1) selon la revendication 5, ladite première branche (15) s'étendant à côté de ladite surface faisant face vers l'extérieur dudit premier côté périphérique (5a) de l'IGU (5), et la branche primaire (25) dans ladite position fermée s'étendant à côté et le long d'une surface faisant face vers l'extérieur de ladite première branche (15).

8. Lucarne de toit (1) selon l'une quelconque des revendications 5 à 7, le premier élément latéral de châssis (14) comprenant en outre une deuxième branche (16), qui peut potentiellement faire saillie à partir d'une extrémité inférieure de ladite première branche (15) de sorte à s'étendre le long d'une partie de ladite surface principale intérieure (5b) de l'IGU (5) pour supporter l'IGU (5), ladite deuxième branche (16) reposant potentiellement sur une surface de butée supérieure de ladite branche secondaire (26) dans ladite position fermée de ladite lucarne (1).

9. Lucarne de toit (1) selon l'une quelconque des revendications précédentes 5 à 8, ledit premier élément latéral de châssis (14) ayant en outre une troisième branche (17) faisant saillie depuis une extrémité supérieure de ladite première branche (15) et s'étendant dans ladite direction vers l'extérieur dans le plan du toit et, éventuellement, une quatrième branche (31) faisant saillie depuis ladite troisième branche (17) et s'étendant sensiblement dans ladite direction vers le haut et, éventuellement, une cinquième branche faisant saillie depuis ladite quatrième branche (31) sensiblement dans ladite direction vers l'extérieur dans le plan du toit.

10. Lucarne de toit (1) selon l'une quelconque des revendications 5 à 8, ladite surface principale extérieure (5g) de l'IGU (5) étant positionnée à une distance inférieure à 80 % d'une hauteur totale de la première branche (15) depuis une extrémité inférieure de ladite première branche (15).

11. Lucarne de toit (1) selon l'une quelconque des revendications précédentes, la lucarne de toit (1) étant installée potentiellement dans ou sur un toit plat ou incliné d'un bâtiment pour couvrir une ouverture de toit du toit, ladite surface principale intérieure (5b) de l'IGU (5) faisant face à un intérieur du bâtiment.

12. Lucarne de toit (1) selon l'une quelconque des revendications précédentes, la protection contre les intempéries (9) comprenant une vitre de protection contre les intempéries (8) transparente ou translucide.

13. Lucarne de toit (1) selon l'une quelconque des revendications précédentes, la protection contre les intempéries (9) étant dépourvue d'un espace étanche rempli de gaz entre la vitre de protection contre les intempéries (8) et l'IGU (5).

14. Lucarne de toit (1) selon l'une quelconque des revendications précédentes, la protection contre les intempéries (9) extérieure comprenant une vitre de protection contre les intempéries (8) fixée au cadre de lucarne (7) de sorte à protéger une partie de lucarne (4) de la lucarne de toit, la partie de lucarne (4) comprenant le cadre (7) et l'IGU (5).

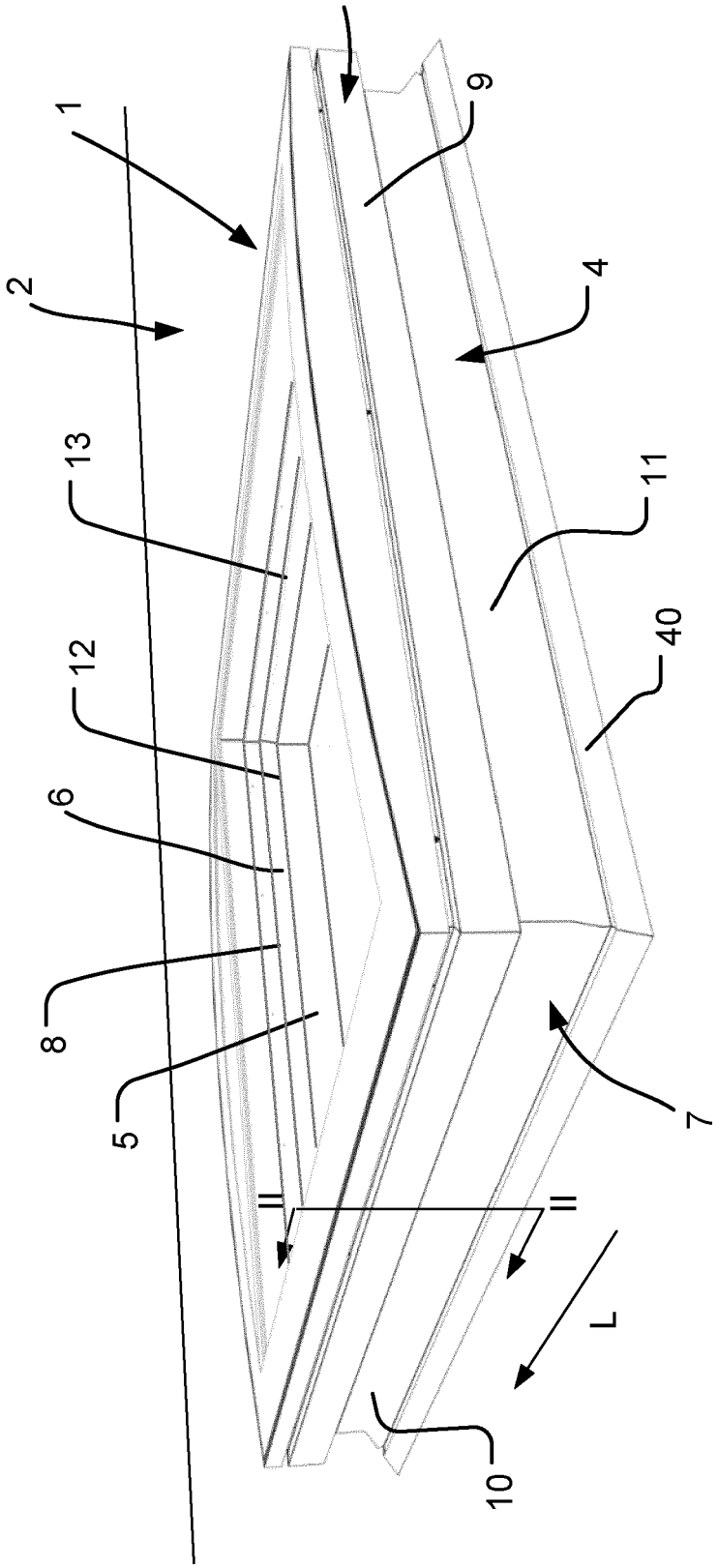

Fig. 1

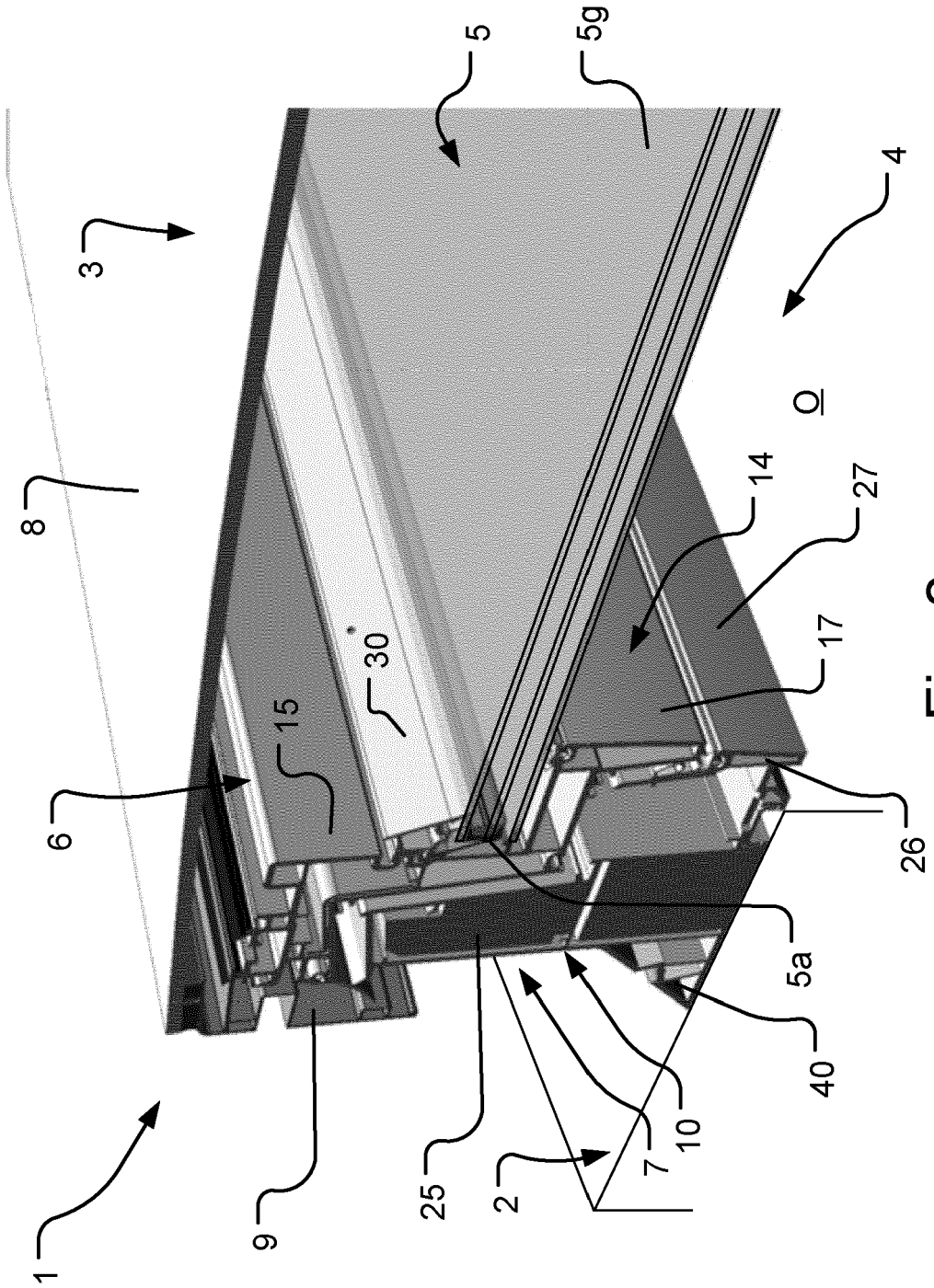

Fig. 2

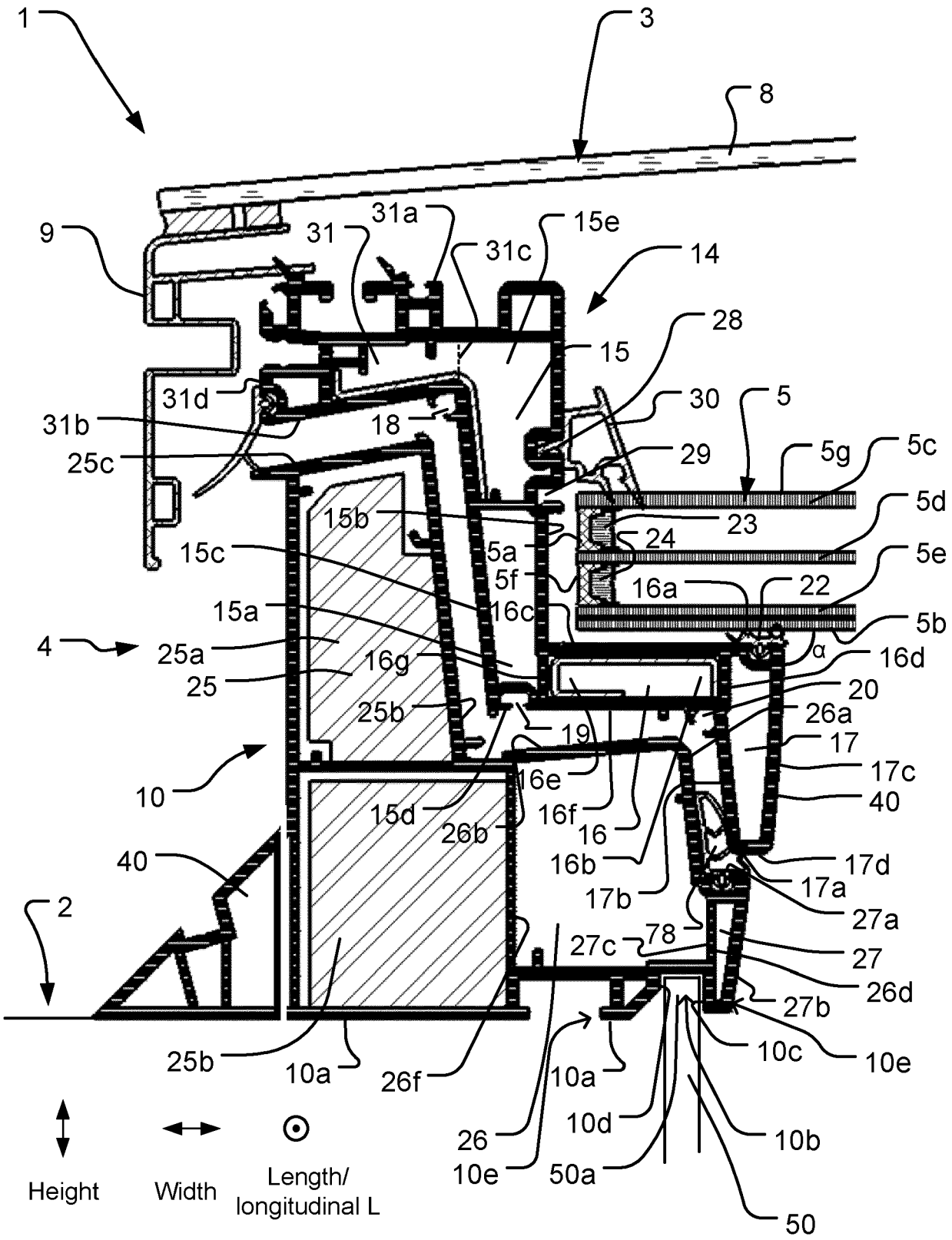
1
3
8
9
31
31a
31c
15e
14
28
15
31d
30
5
31b
18
29
5g
5c
25c
5d
15b
23
24
5a
5e
15c
5f
16a
22
16c
15a
5b
4
25a
16g
α
16d
25
20
25b
26a
19
17
17c
10
16e
40
15d
16f
26b
16
16b
17d
40
17a
17b
27a
2
78
27c
27
26d
27b
25b
10a
26f
10a
10c
10e
10d
10b
26
10e
50a
50
Height
Width
Length/
longitudinal L

Fig. 3

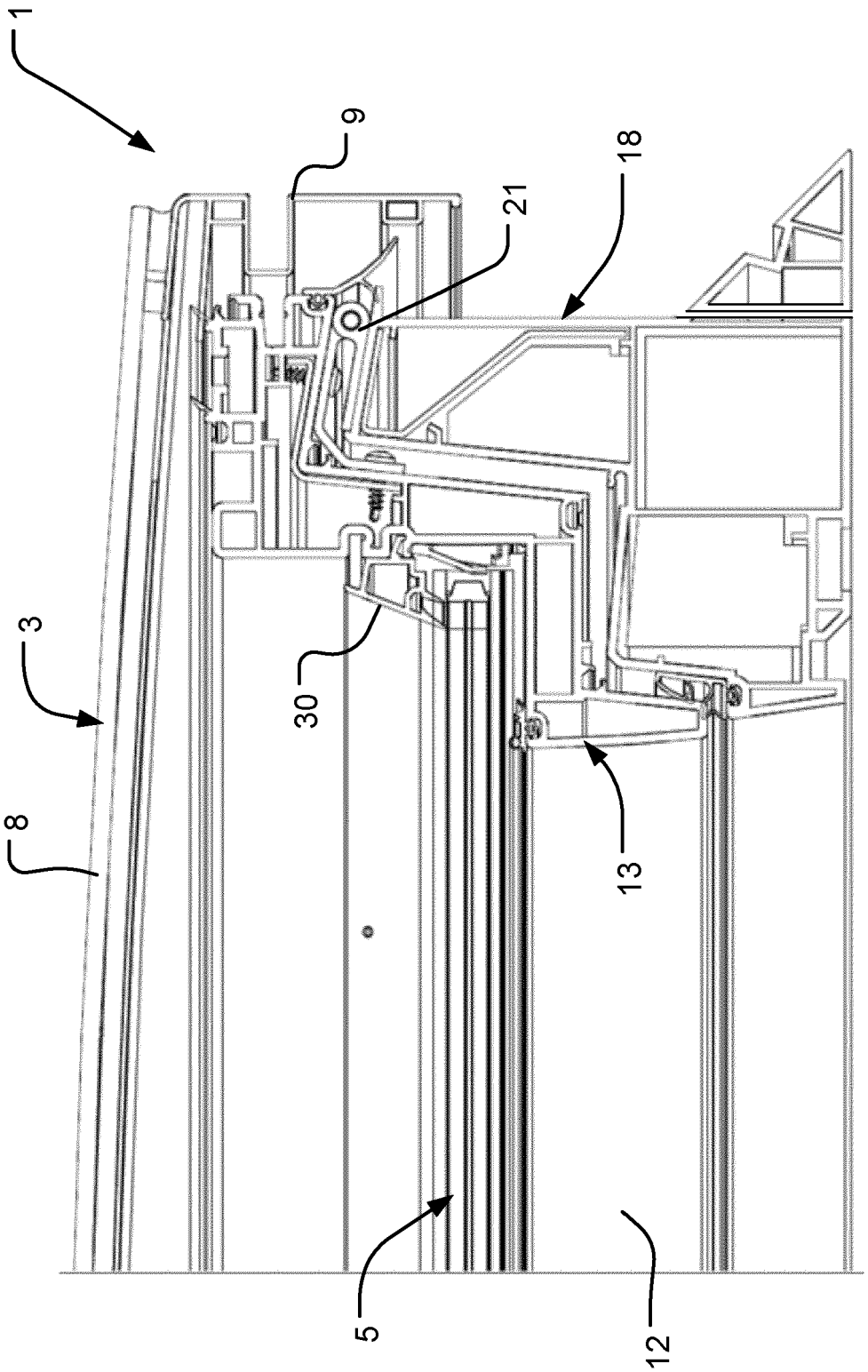

Fig. 4

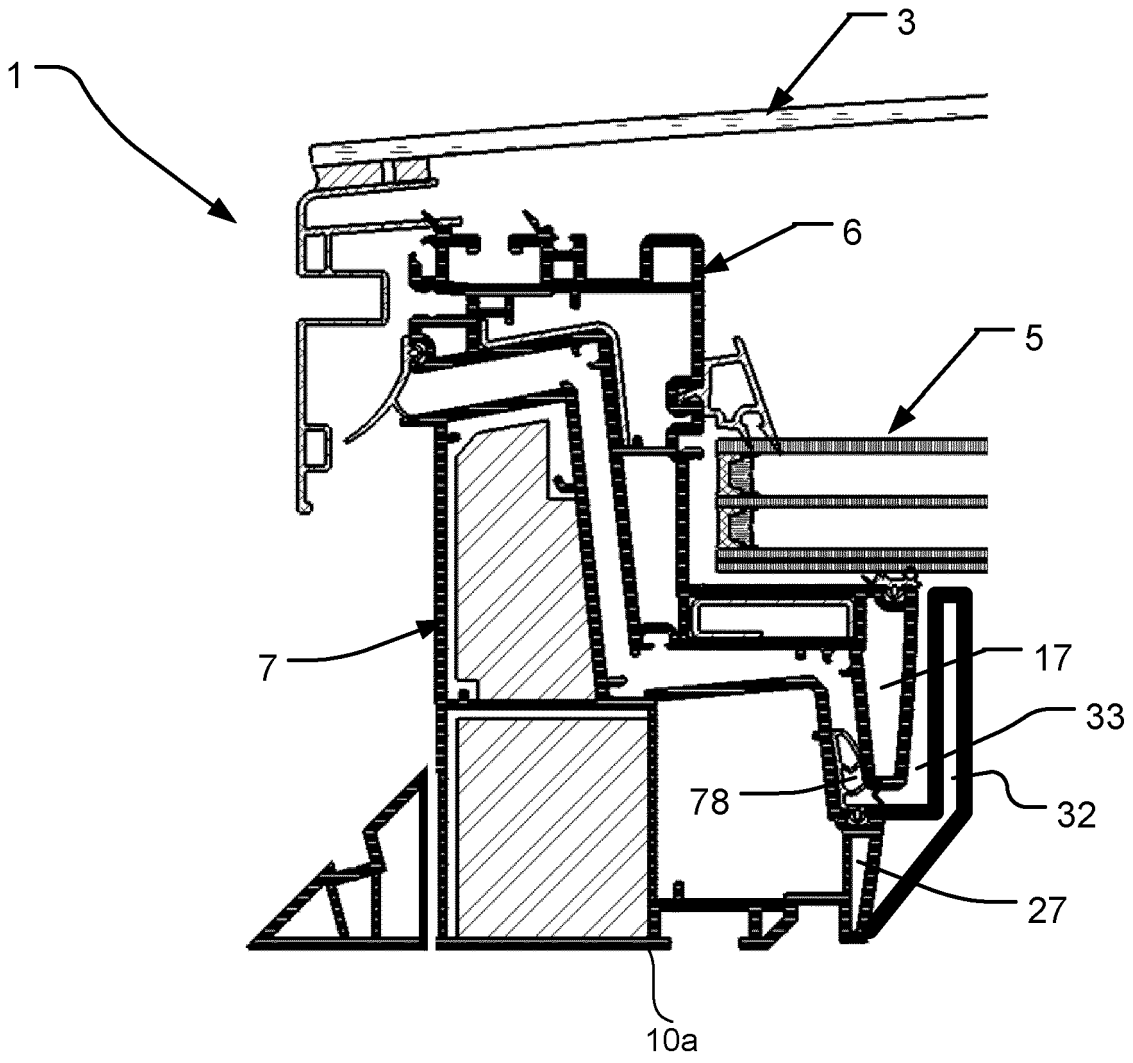

Fig. 5

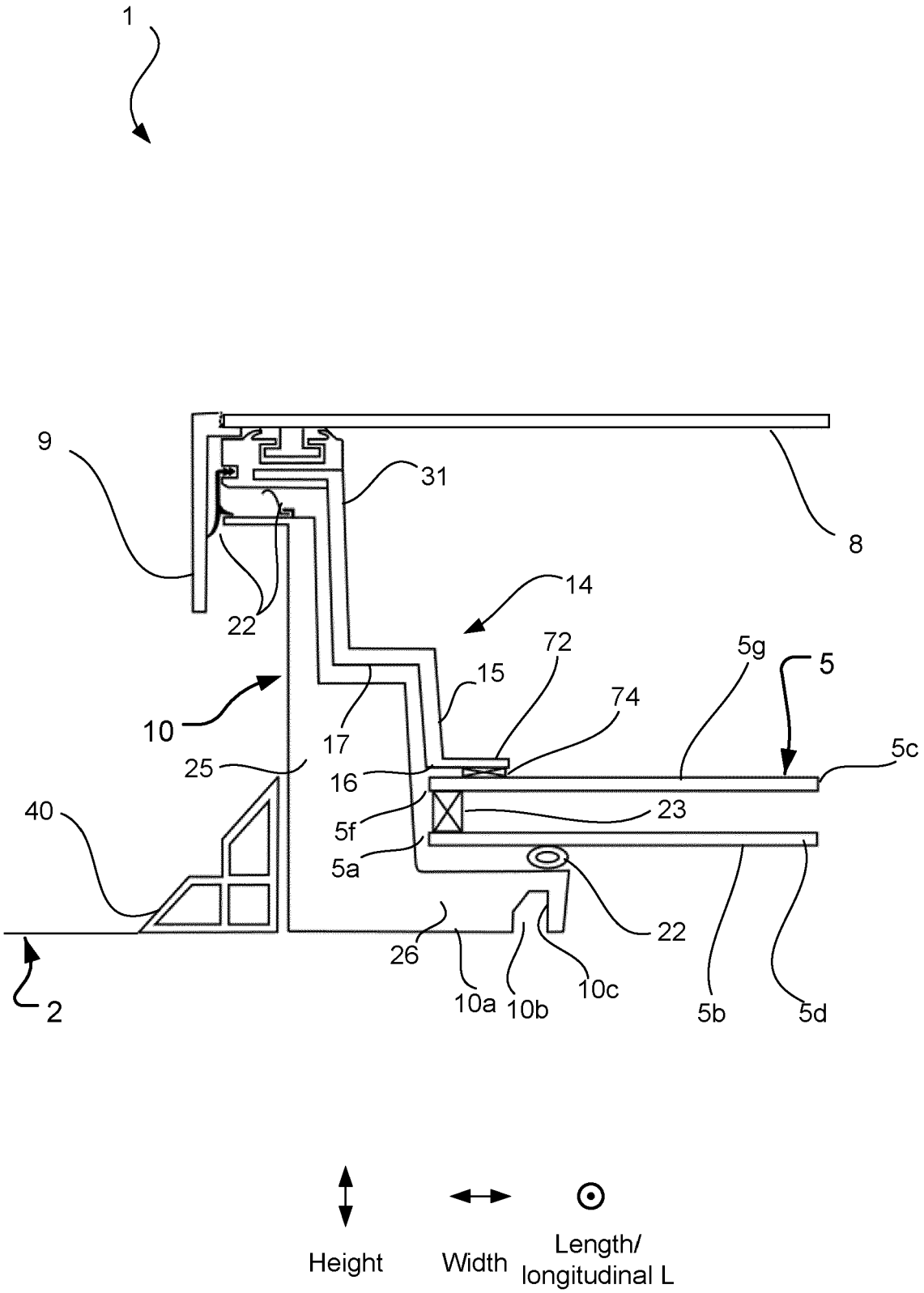
1
9
31
8
14
22
72
5g
5
15
74
10
17
5c
25
16
40
23
5f
5a
22
26
10a
10b
10c
5b
5d
2
Height
Width
Length/
longitudinal L

Fig. 6

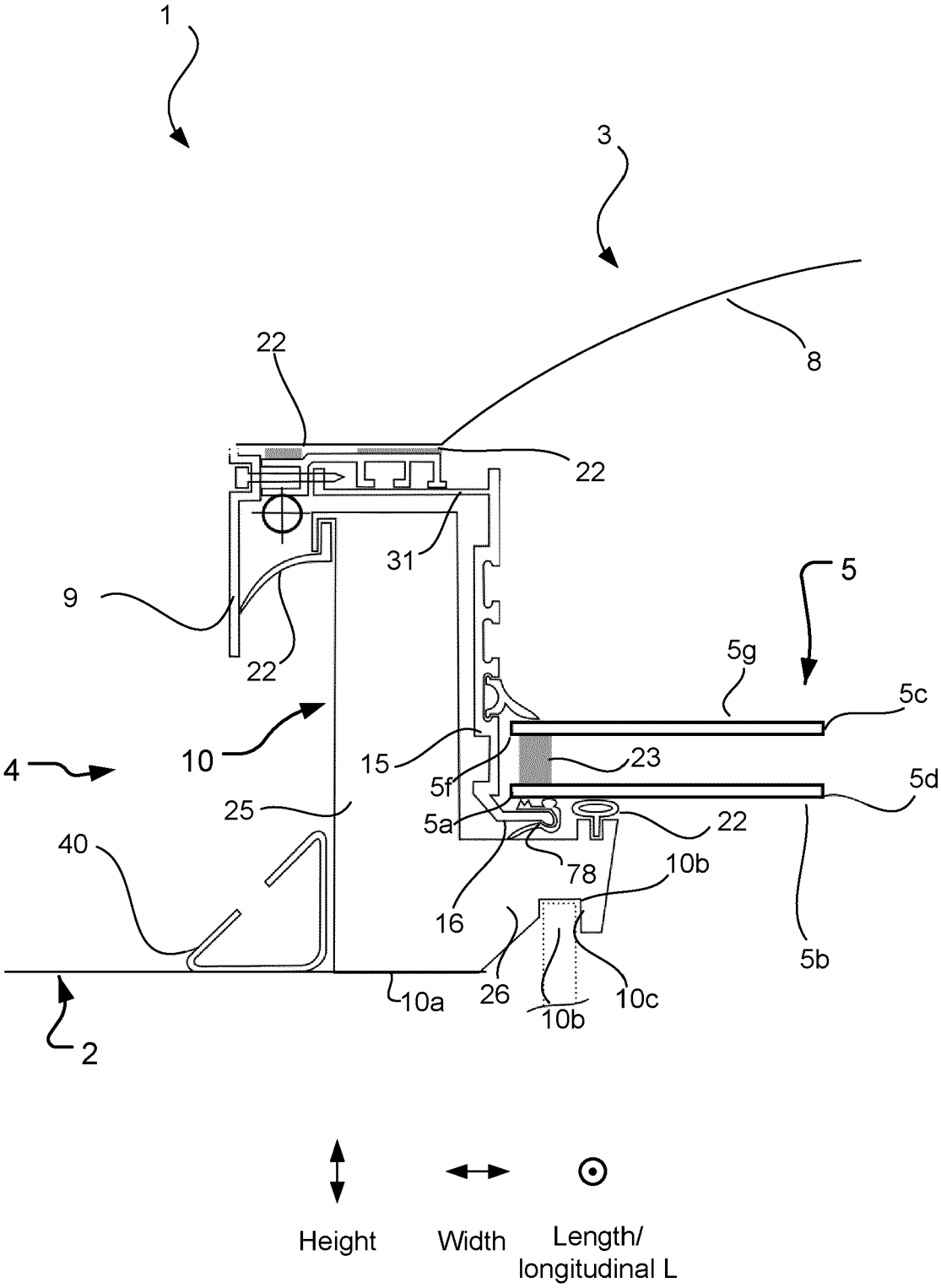
1
3
8
22
22
31
9
22
5
5g
5c
4
10
15
23
5f
5d
25
5a
22
40
78
10b
16
5b
26
10a
10c
10b
2
Height
Width
Length/
longitudinal L

Fig. 7

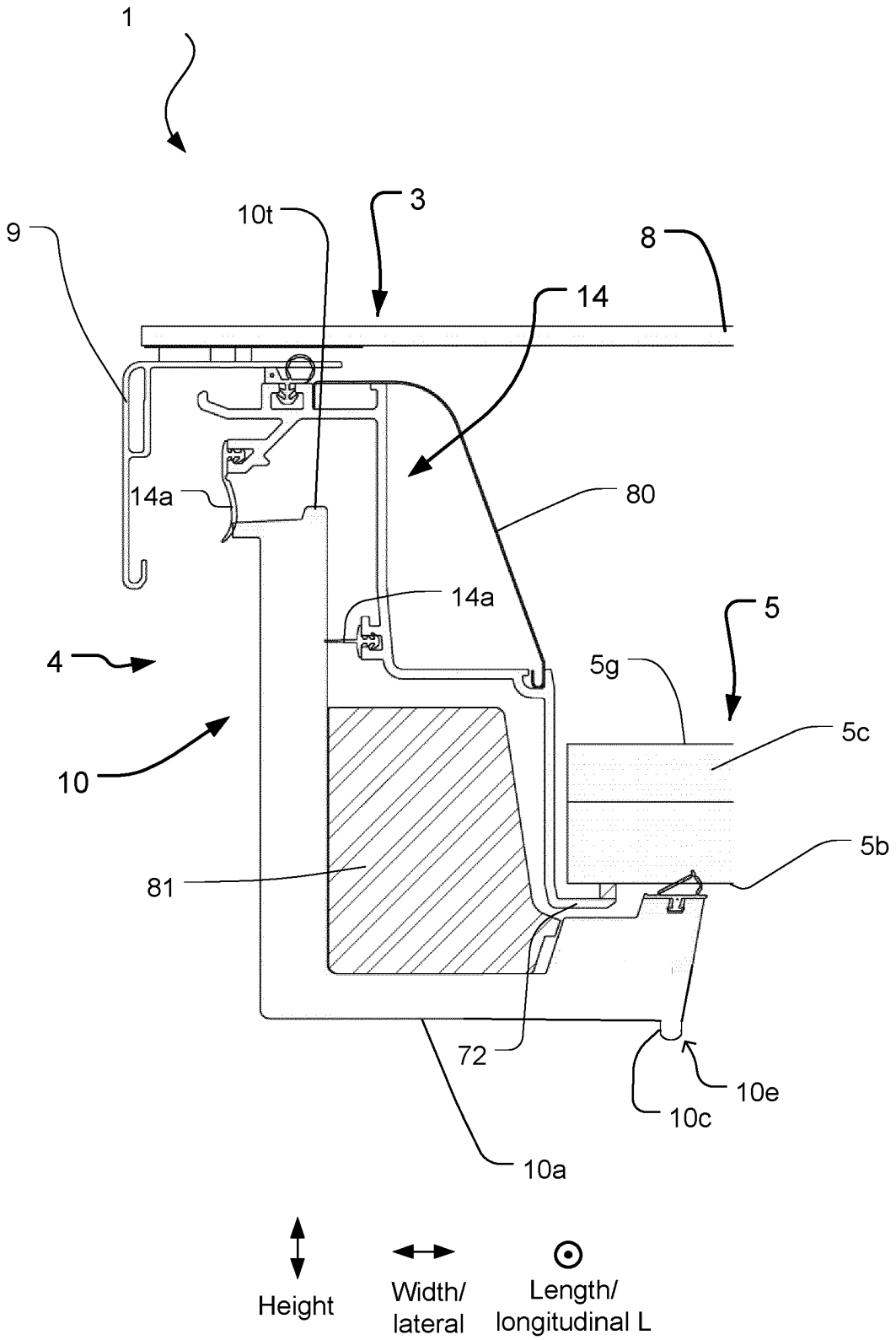
1
3
10t
9
8
14
14a
80
14a
5
4
5g
5c
10
5b
81
72
10e
10c
10a
Height
Width/
lateral
Length/
longitudinal L

Fig. 8

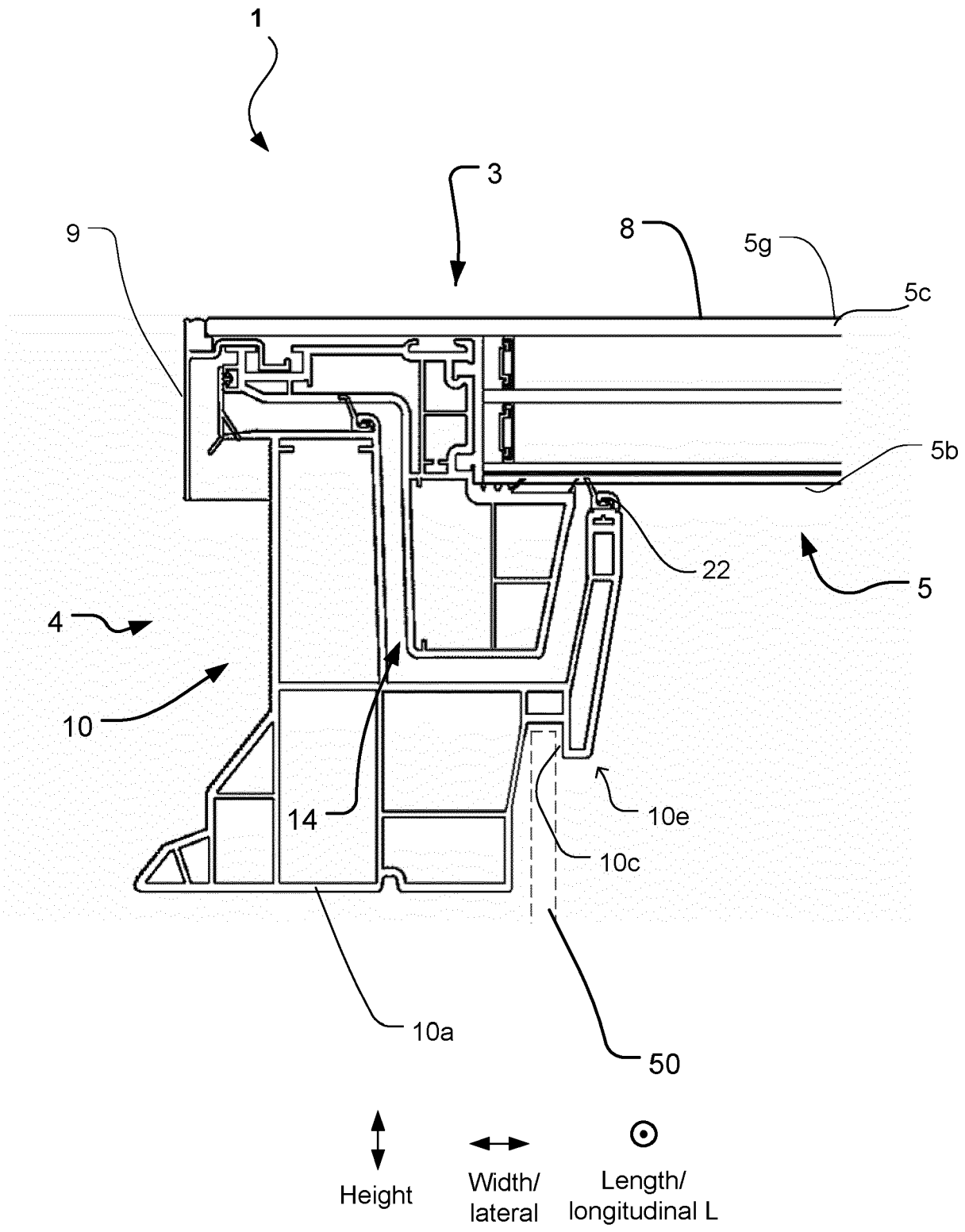
1
3
9
8
5g
5c
5b
22
5
4
10
14
10e
10c
10a
50
Height
Width/
lateral
Length/
longitudinal L

Fig. 9

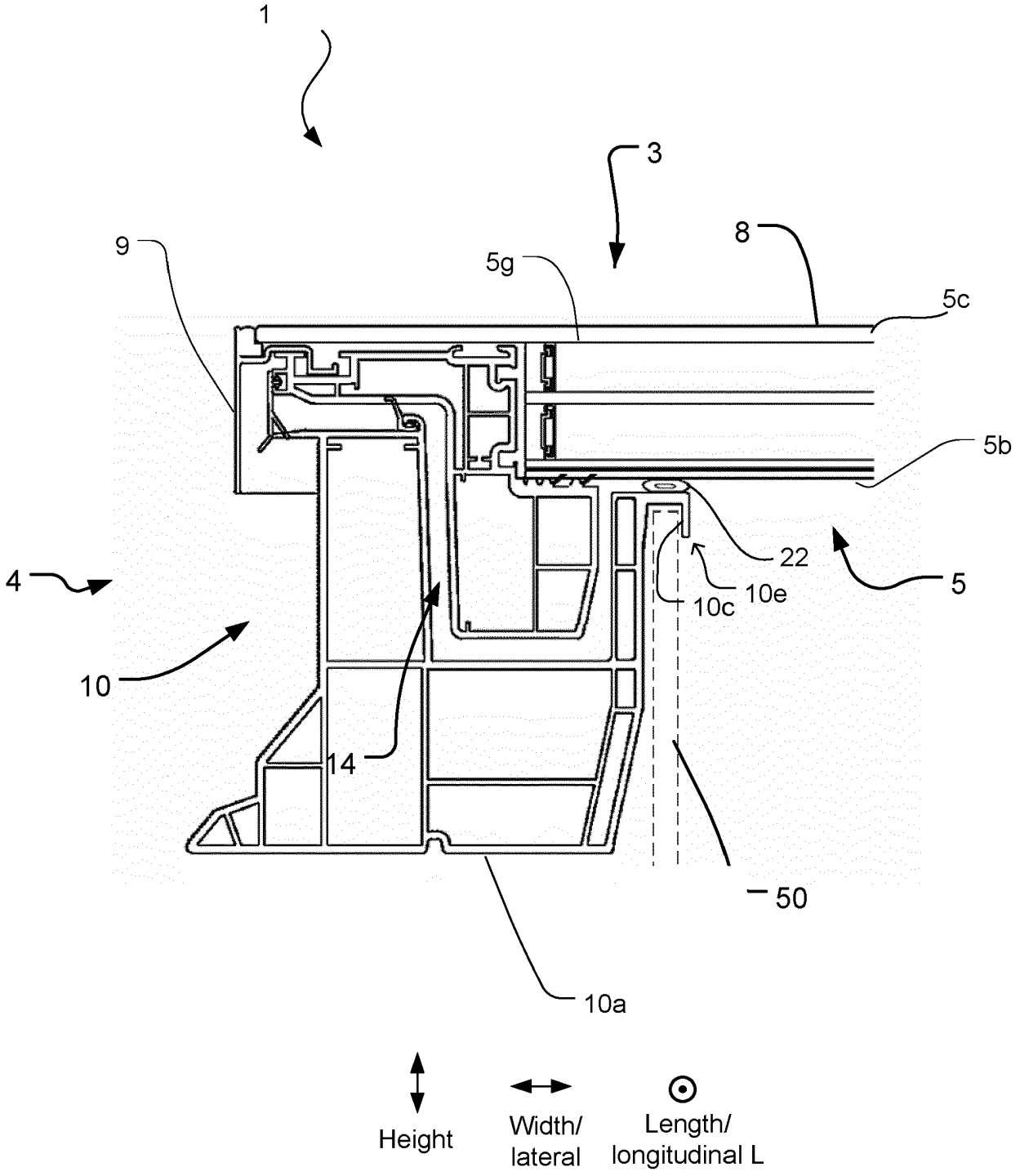
1
3
9
5g
8
5c
5b
22
5
4
10c
10e
10
14
50
10a
Height
Width/
lateral
Length/
longitudinal L

Fig. 10

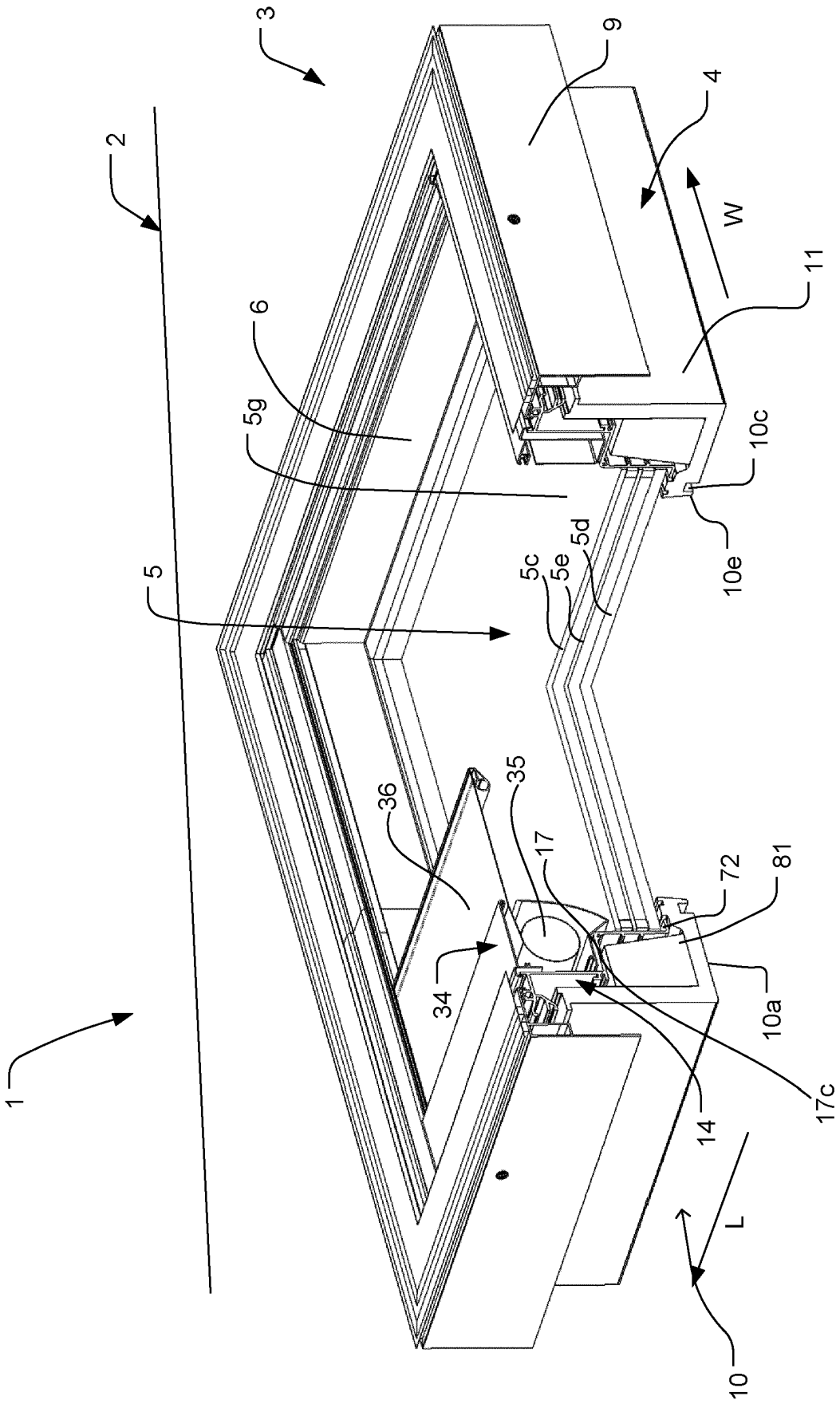

Fig. 11

REFERENCES CITED IN THE DESCRIPTION

This list of references cited by the applicant is for the reader's convenience only. It does not form part of the European patent document. Even though great care has been taken in compiling the references, errors or omissions cannot be excluded and the EPO disclaims all liability in this regard.

Patent documents cited in the description

- EP 3396100 A1 **[0001]**
- WO 2009080026 A1 **[0005]**