(19) Europäisches Patentamt
European Patent Office
Office européen des brevets

(11) EP 3 919 426 A1

(12) EUROPEAN PATENT APPLICATION

(43) Date of publication:
08.12.2021 Bulletin 2021/49

(51) Int Cl.:
B65H 67/06 *(2006.01)* ***B65H 63/00*** *(2006.01)*
D01H 13/32 *(2006.01)*

(21) Application number: **21175905.5**

(22) Date of filing: **26.05.2021**

(84) Designated Contracting States:
AL AT BE BG CH CY CZ DE DK EE ES FI FR GB GR HR HU IE IS IT LI LT LU LV MC MK MT NL NO PL PT RO RS SE SI SK SM TR
Designated Extension States:
BA ME
Designated Validation States:
KH MA MD TN

(30) Priority: **05.06.2020 JP 2020098396**

(71) Applicant: **Murata Machinery, Ltd.**
Kyoto-shi,
Kyoto 601-8326 (JP)

(72) Inventors:
- **MURAYAMA, Kenichi**
Kyoto, 612-8686 (JP)
- **FUKUHARA, Shuichi**
Kyoto, 612-8686 (JP)

(74) Representative: **Stöckeler, Ferdinand et al**
Schoppe, Zimmermann, Stöckeler
Zinkler, Schenk & Partner mbB
Patentanwälte
Radlkoferstrasse 2
81373 München (DE)

(54) **YARN WINDING MACHINE AND SPINNING SYSTEM**

(57) A yarn winding machine (1) winds yarn of a yarn feeding bobbin (B) transferred from a spinning frame (2) by a bobbin transfer device (3) to form a package (P), and includes a controller (17). When a partial defect has occurred in the yarn of the yarn feeding bobbin (B) in the spinning frame (2), the controller (17) acquires first yarn-defect information prepared by the spinning frame (2) about the occurrence of the partial defect. The controller (17) stops winding of the yarn from the yarn feeding bobbin (B) upon determining that the yarn has been unwound from the yarn feeding bobbin (B) up to a position corresponding to the partial defect of the first yarn-defect information, based on yarn information of the yarn wound from the yarn feeding bobbin (B) related to the first yarn-defect information acquired and the first yarn-defect information prepared by the spinning frame (2), when the first yarn-defect information of the yarn feeding bobbin (B) has been acquired.

Fig.1

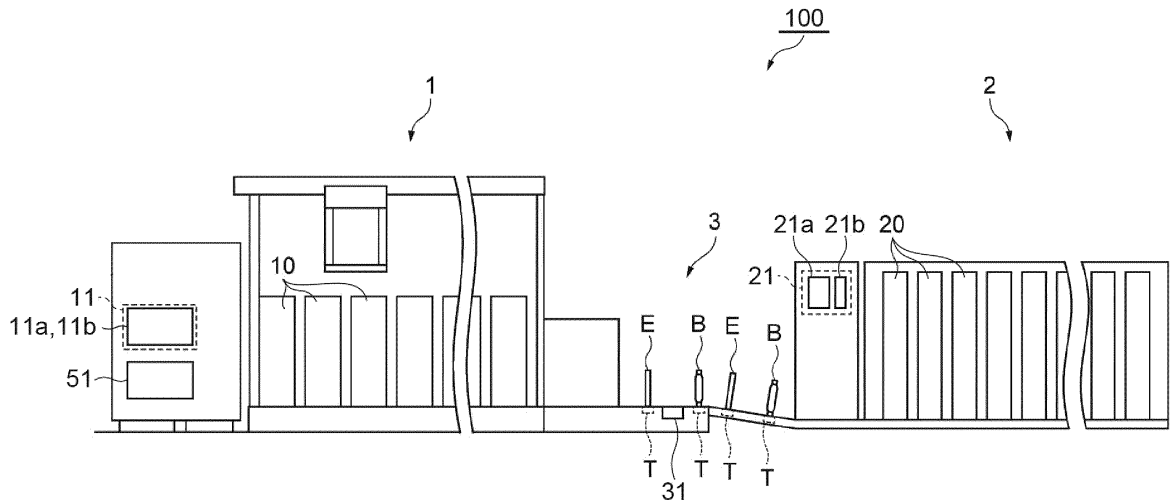

EP 3 919 426 A1

Description

TECHNICAL FIELD

[0001] The present disclosure relates to a yarn winding machine and a spinning system.

BACKGROUND

[0002] A spinning system including: a spinning frame configured to form a yarn feeding bobbin onto which yarn has been wound; and a yarn winding machine configured to wind yarn of the yarn feeding bobbin transferred from the spinning frame by a bobbin transfer device to form a package is known (see PCT Publication No. WO2018/212293, for example). In this spinning system, quality information on the quality of a yarn feeding bobbin is acquired. Whether the quality of the yarn feeding bobbin satisfies a quality reference value is determined based on the quality information, and when the quality reference value is not satisfied, yarn of the yarn feeding bobbin is prevented from being wound by the yarn winding machine.

SUMMARY

[0003] Generally, there is a case in which yarn having inconsistent yarn quality is wound in a bottom portion (portion onto which yarn is to be wound first by a spinning frame) of a yarn feeding bobbin to be wound by a yarn winding machine. Due to such a partial defect of the yarn feeding bobbin, the yarn winding machine has a problem in which removal of a yarn defect and yarn splicing operation are performed frequently. In this regard, in the above-described conventional spinning system, a yarn feeding bobbin that has been determined to be defective is prevented from being wound by the yarn winding machine, and thus the problem can be avoided, but a portion having normal yarn quality (portion other than the partial defect) in the yarn feeding bobbin will be discarded without being used.

[0004] In view of this, it is an object of the present disclosure to provide a yarn winding machine and a spinning system that can prevent production efficiency from decreasing.

[0005] A yarn winding machine according to one aspect of the present disclosure is a yarn winding machine configured to wind yarn of a yarn feeding bobbin transferred from a spinning frame by a bobbin transfer device to form a package, and the yarn winding machine includes a controller. When a partial defect has occurred in the yarn of the yarn feeding bobbin in the spinning frame, the controller acquires first yarn-defect information prepared by the spinning frame about the occurrence of the partial defect. The controller causes winding of the yarn from the yarn feeding bobbin to stop upon determining that the yarn has been unwound from the yarn feeding bobbin up to a position corresponding to the partial defect of the first yarn-defect information, based on yarn information of the yarn wound from the yarn feeding bobbin related to the first yarn-defect information acquired and the first yarn-defect information prepared by the spinning frame, when the first yarn-defect information of the yarn feeding bobbin has been acquired.

[0006] In this yarn winding machine, the yarn up to the position corresponding to the partial defect of the yarn feeding bobbin related to the first yarn-defect information (i.e., a portion of yarn having normal yarn quality) can be wound without wasting it. Thus, production efficiency can be prevented from decreasing.

[0007] In the yarn winding machine according to one aspect of the present disclosure, the controller causes this yarn feeding bobbin to be discharged as a defective bobbin upon determining, based on the yarn information, that the yarn has been unwound from the yarn feeding bobbin up to the position corresponding to the partial defect of the first yarn-defect information of the yarn feeding bobbin. In this case, in the yarn winding machine, the yarn having the partial defect of the yarn feeding bobbin can be reliably prevented from being wound. Furthermore, by preventing deletion of a predictable defective portion and successive occurrences of splicing, production efficiency in the yarn winding machine is increased.

[0008] In the yarn winding machine according to one aspect of the present disclosure, the first yarn-defect information may be information on yarn breakage in a bottom portion of the yarn feeding bobbin. In this case, in the yarn winding machine, the yarn up to the bottom portion of the yarn feeding bobbin can be wound without wasting it. Generally, the quality of yarn in a bottom portion of a yarn feeding bobbin is more likely to be poor. Thus, if the information on yarn breakage in the bottom portion is considered, efficiency decrease when yarn having a partial defect that occurs due to a production problem of the spinning frame is wound by the yarn winding machine can be prevented.

[0009] The yarn winding machine according to one aspect of the present disclosure may further include a yarn-length measuring mechanism configured to acquire, as the yarn information, information on total length of the yarn wound by the yarn winding machine or information on length of the yarn unwound from the yarn feeding bobbin. Based on information on the total length of the yarn wound by the yarn winding machine that the yarn-length measuring mechanism has calculated or information on the length of the yarn unwound from the yarn feeding bobbin that the yarn-length measuring mechanism has measured, the controller may determine that the yarn has been unwound from the yarn feeding bobbin up to the position corresponding to the partial defect of the first yarn-defect information. In this case, the controller determines, with the yarn-length measuring mechanism, that the yarn has been unwound from the yarn feeding bobbin up to the position corresponding to the partial defect of the first yarn-defect information, and thus can more accurately determine that the yarn has been unwound

from the yarn feeding bobbin up to the position corresponding to the partial defect of the first yarn-defect information. Only the defective portion of the yarn will be discarded.

[0010] The yarn winding machine according to one aspect of the present disclosure may further include a yarn-quality monitoring device configured to monitor a state of the yarn to detect a yarn defect. The controller may manage detection frequency of yarn defects measured by the yarn-quality monitoring device as the yarn information, and when the detection frequency of yarn defects exceeds a predetermined specified frequency, the controller may determine that the yarn has been unwound from the yarn feeding bobbin up to the position corresponding to the partial defect of the first yarn-defect information. In this case, without adding a special device like the yarn-length measuring mechanism, the controller can determine that the yarn has been unwound from the yarn feeding bobbin up to the position corresponding to the partial defect of the first yarn-defect information. Thus, this aspect of the present disclosure can be achieved without an increase in costs.

[0011] A spinning system according to one aspect of the present disclosure is a spinning system including the yarn winding machine described above and a spinning frame. The yarn feeding bobbin may be transferred by the bobbin transfer device in a manner set on a tray having a storage section, the spinning frame or the bobbin transfer device may include an information writing section configured to write the first yarn-defect information to the storage section, and the yarn winding machine may include an information reading section configured to read the first yarn-defect information written by the information writing section. In this case, the yarn winding machine can acquire the first yarn-defect information of the yarn feeding bobbin, using the information writing section, the information reading section, and the tray having the storage section.

[0012] In the spinning system according to one aspect of the present disclosure, when an uneven twist has been formed in the yarn of the yarn feeding bobbin, the spinning frame acquires second yarn-defect information on this uneven twist, and when yarn breakage has occurred in the yarn of the yarn feeding bobbin at a frequency equal to or higher than a first frequency, the spinning frame acquires third yarn-defect information on the yarn breakage at a frequency equal to or higher than the first frequency. When having acquired the second yarn-defect information or the third yarn-defect information of the yarn feeding bobbin, the yarn winding machine does not wind the yarn from this yarn feeding bobbin. In this case, in the yarn winding machine, the yarn of the yarn feeding bobbin related to the second yarn-defect information or the third yarn-defect information can be prevented from being wound.

[0013] In the spinning system according to one aspect of the present disclosure, when having acquired the second yarn-defect information or the third yarn-defect information of the yarn feeding bobbin, the yarn winding machine may discharge this yarn feeding bobbin as a defective bobbin without winding the yarn from the yarn feeding bobbin. In this case, in the yarn winding machine, the yarn of the yarn feeding bobbin related to the second yarn-defect information or the third yarn-defect information can be reliably prevented from being wound.

[0014] In the spinning system according to one aspect of the present disclosure, when an uneven twist has been formed in the yarn of the yarn feeding bobbin, the spinning frame may acquire second yarn-defect information on this uneven twist, and when yarn breakage has occurred in the yarn of the yarn feeding bobbin at a frequency equal to or higher than a first frequency, the spinning frame may acquire third yarn-defect information on the yarn breakage at a frequency equal to or higher than the first frequency. When having acquired the second yarn-defect information or the third yarn-defect information of the yarn feeding bobbin, the yarn winding machine may determine whether quality of this yarn feeding bobbin satisfies a predetermined quality reference value based on the yarn information acquired when the yarn is wound from the yarn feeding bobbin, and when having determined that the quality reference value is not satisfied, the yarn winding machine may stop winding the yarn from the yarn feeding bobbin. Defect information measured by the spinning frame cannot be checked as accurately as the yarn-quality monitoring device, such as a clearer, provided to the yarn winding machine. Thus, it can be verified how accurate the quality of the defect information measured by the spinning frame is by checking the defect information measured by the spinning frame with the yarn quality monitoring device, such as a clearer, which is provided to the yarn winding machine. After verification has been performed once, the defect information measured by the spinning frame can be evaluated based on this verification result, and thus the reliability of the defect information measured by the spinning frame is increased.

[0015] In the spinning system according to one aspect of the present disclosure, when yarn breakage has occurred in the yarn of the yarn feeding bobbin at a frequency lower than a first frequency and equal to or higher than a second frequency, the spinning frame may acquire fourth yarn-defect information on yarn breakage at a frequency lower than the first frequency and equal to or higher than the second frequency. When having acquired the fourth yarn-defect information of the yarn feeding bobbin, the yarn winding machine may determine whether quality of this yarn feeding bobbin satisfies a predetermined quality reference value based on the yarn information acquired when the yarn is wound from the yarn feeding bobbin. When having determined that the quality reference value is not satisfied, the yarn winding machine may stop winding the yarn from the yarn feeding bobbin. In this case, winding of the yarn of the yarn feeding bobbin related to the fourth yarn-defect information by the yarn winding machine is not always stopped, and if the yarn

winding machine has determined that the quality reference value is satisfied, the yarn can be wound by the yarn winding machine as usual.

[0016] In the spinning system according to one aspect of the present disclosure, when having determined that the quality reference value is not satisfied, the yarn winding machine may discharge this yarn feeding bobbin as a defective bobbin. In this case, in the yarn winding machine, the yarn of the yarn feeding bobbin that does not satisfy the quality reference value can be reliably prevented from being wound.

[0017] In the spinning system according to one aspect of the present disclosure, the bobbin transfer device may include a discharge device capable of discharging outside a path the defective bobbin discharged by the yarn winding machine. In this case, in the bobbin transfer device, the defective bobbin can be discharged.

[0018] In the spinning system according to one aspect of the present disclosure, the yarn winding machine may acquire the first yarn-defect information via communication or in response to operation input of an operator with an operation part. In this case, the yarn winding machine can acquire the first yarn-defect information of the yarn feeding bobbin, using the communication or the operation input.

[0019] In the spinning system according to one aspect of the present disclosure, the controller may perform: a first process of grasping the amount of yarn of the yarn feeding bobbin present in the yarn winding machine and the bobbin transfer device; a second process of calculating, for each yarn feeding bobbin, the amount of yarn of the yarn feeding bobbin that has been completely wound at final doffing in the spinning frame; and a third process of supply yarn in an amount needed for full winding to a predetermined winding unit of the yarn winding machine . In the second process, the controller may, in the yarn feeding bobbin having defective yarn, manage both the length of normal yarn and the length of the defective yarn. In the third process, the controller may, in the yarn feeding bobbin having defective yarn, calculate the amount of yarn except for the defective yarn and also discharge the defective yarn without winding the defective yarn. By this control, yarn in an amount needed for full winding can be supplied to the predetermined winding unit, whereby the lot can be prevented from ending up with an incompletely wound package.

[0020] According to the present disclosure, a spinning system that can prevent production efficiency from decreasing can be provided.

BRIEF DESCRIPTION OF THE DRAWINGS

[0021]

FIG. 1 is a side view illustrating a spinning system according to one embodiment.

FIG. 2A is a perspective view illustrating a tray. FIG. 2B is a perspective view illustrating an empty bobbin.

FIG. 2C is a perspective view illustrating a yarn feeding bobbin.

FIG. 3 is a side view illustrating a spinning unit of the spinning system in FIG. 1.

FIG. 4 is a block diagram illustrating main parts of the spinning system in FIG. 1.

FIG. 5 is a plan view illustrating the spinning system in FIG. 1.

FIG. 6 is a front view illustrating an automatic winder of the spinning system in FIG. 1.

DETAILED DESCRIPTION

[0022] As illustrated in FIG. 1, a spinning system 100 includes an automatic winder (yarn winding machine) 1 and a ring spinning frame (spinning frame) 2. The ring spinning frame 2 generates yarn Y from roved yarn, and winds the yarn Y onto an empty bobbin tube E (a bobbin winding tube around which yarn Y is not wound) to form a yarn feeding bobbin B. The automatic winder 1 winds the yarn Y of the yarn feeding bobbin B transferred (conveyed) from the ring spinning frame 2 by a bobbin transfer device 3 to form a package P. The bobbin transfer device 3 transfers the yarn feeding bobbin B from the ring spinning frame 2 to the automatic winder 1, and transfers an empty bobbin tube E from the automatic winder 1 to the ring spinning frame 2.

[0023] The yarn feeding bobbin B and the empty bobbin tube E are each transferred in a manner set (placed) on a tray T. As illustrated in FIG. 2A, each tray T has a disk-like base portion T1, a pin T2 protruding upward from the base portion T1, and a radio frequency (RF) tag (storage section) T3 provided to the base portion T1. Herein, the RF tag T3 may be embedded in the base portion T1, or may be attached to an outer surface of the base portion T1. The shape of the RF tag T3 is not limited to a rectangular shape as illustrated in FIG. 2A, and may be a doughnut shape (ring shape), for example. The RF tag T3 stores therein identification information for identifying a tray T to which this RF tag T3 is provided.

[0024] As illustrated in FIG. 2B and FIG. 2C, a pin T2 is inserted into bottom portion Ea of the bobbin tube E, whereby the yarn feeding bobbin B and the bobbin tube E that is a winding tube thereof are each set on the tray T with the top portion Eb of the bobbin tube E facing upward. The RF tag T3 stores therein yarn-defect information on a defect of yarn Y in the yarn feeding bobbin B set on the tray T. In the spinning system 100, the status of the yarn feeding bobbin B set on the tray T is managed by a radio frequency identification (RFID: individual identification using radio waves) technique. Herein, the configuration of the tray T is not limited to the form described above. For example, the shape of the base portion T1 does not have to be a disk shape, and the method of setting the yarn feeding bobbin B and the empty bobbin tube E does not have to be insertion of the pin T2. The position of placing the RF tag T3 may be any position where reading and writing can be performed with an RF

writer (information writing section) 31 and RF readers (information reading sections) 18, 41 described later.

Configuration of Ring Spinning Frame 2

[0025] The ring spinning frame 2 performs spinning step at a previous step for the automatic winder 1. As illustrated in FIG. 1, the ring spinning frame 2 includes a spinning-machine control device 21 configured to control operation of the ring spinning frame 2 and a plurality of spinning units 20 each configured to form a yarn feeding bobbin B. The spinning-machine control device 21 includes an electronic control unit having a central processing unit (CPU), a read only memory (ROM), a random access memory (RAM), an electrically erasable programmable read only memory (EEPROM), a communication device, and storage device, for example. The spinning-machine control device 21 includes a display section 21a such as a display and an operation part 21b such as input keys. The display section 21a displays, for example, an operating status of each spinning unit 20. With the operation part 21b, various types of operation input are performed by an operator, for example. The display section 21a and the operation part 21b may be configured with a touch panel.

[0026] As illustrated in FIG. 3, the spinning unit 20 includes a drafting device 22 and a twisting device 23. The drafting device 22 includes a back roller pair 22a, a middle roller pair 22b, and a front roller pair 22c. Each of the back roller pair 22a, the middle roller pair 22b, and the front roller pair 22c includes a bottom roller and a top roller. Around the rollers constituting the middle roller pair 22b, apron belts are each wound. In the drafting device 22, the back roller pair 22a, the middle roller pair 22b, and the front roller pair 22c are rotated at a predetermined speed ratio, whereby roved yarn Y1 that has been unwound from a roved yarn bobbin is drafted.

[0027] The twisting device 23 includes a spindle shaft 24, a ring rail 25, a ring 26, and a traveller 27. The spindle shaft 24 holds the bottom portion Ea of a bobbin tube E with the top portion Eb of the bobbin tube E facing upward, and rotates the bobbin tube E. The ring rail 25 is movable in the axial direction of the bobbin tube E. The ring 26 is fixed to the ring rail 25. The traveller 27 is supported by the ring 26, and is movable along the ring 26.

[0028] In the twisting device 23, roved yarn Y1 that has been drafted by the drafting device 22. is inserted into a space between the ring 26 and the traveller 27, and an end portion of the roved yarn Y1 is fixed to the bobbin tube E. In this state, when the spindle shaft 24 rotates the bobbin tube E, the traveller 27 moves along the ring 26 in a manner pulled by the roved yarn Y1. At this time, the ring rail 25 gradually moves from the bottom portion Ea side to the top portion Eb side while reciprocating within a predetermined range along the axial direction of the bobbin tube E. In the twisting device 23, rotation of the traveller 27 lags behind rotation of the bobbin tube E, whereby the roved yarn Y1 is twisted to form yarn Y, and this yarn Y is wound around the bobbin tube E to form a yarn feeding bobbin B.

[0029] The ring spinning frame 2 including the spinning units 20 each configured as described above is of what is called a simultaneous doffing type. Specifically, the ring spinning frame 2 stocks a plurality of empty bobbin tubes E transferred from the automatic winder 1 by the bobbin transfer device 3, simultaneously sets the bobbin tubes E on the respective spinning units 20, and simultaneously starts winding of yarn Y. When winding of yarn Y has been completed in the respective spinning units 20 and yarn feeding bobbins B have been formed, the ring spinning frame 2 simultaneously doffs all of the yarn feeding bobbins B. Subsequently, the ring spinning frame 2 pulls out empty bobbin tubes E that have been stocked during the above processes from trays T and simultaneously sets the empty bobbin tubes E on the respective spinning units 20 again and, instead, simultaneously sets the doffed yarn feeding bobbins B on the trays T. The doffed yarn feeding bobbins B are transferred to the automatic winder 1 by the bobbin transfer device 3.

[0030] As illustrated in FIG. 4, each of the spinning units 20 included in the ring spinning frame 2 includes a defect-information acquisition section 28. The defect-information acquisition section 28 acquires yarn-defect information of a yarn feeding bobbin B formed by the corresponding spinning unit 20. Herein, the defect-information acquisition section 28 may be each provided for every two or more spinning units 20, or may be provided in plurality for each spinning unit 20. As the defect-information acquisition section 28, a known sensor or device may be used. Examples of the defect-information acquisition section 28 include a sensor configured to detect the state (presence/absence of yarn breakage, thickness abnormality, etc.) of yarn Y formed by each spinning unit 20, a sensor configured to detect the state (defective installation, wearing of equipment or a component, etc.) of each part of the spinning unit 20, and a sensor configured to detect the operating state (the formation rate of a yarn feeding bobbin B, etc.) of the spinning unit 20.

[0031] When a partial defect has occurred in yarn Y of a yarn feeding bobbin B, the defect-information acquisition section 28 acquires, as the yarn-defect information, first yarn-defect information on this partial defect. The first yarn-defect information is information prepared by the ring spinning frame 2 about the occurrence of the partial defect. The partial defect of yarn Y in the first yarn-defect information is yarn breakage that has occurred in a bottom portion (portion onto which yarn Y is to be wound first by the ring spinning frame 2) of the yarn feeding bobbin B at a frequency equal to or higher than a certain frequency. In other words, the first yarn-defect information is information on yarn breakage in the bottom portion of the yarn feeding bobbin B. Herein, the frequency at which yarn breakage occurs is the number of occurrences of yarn breakage per unit time or unit length for winding of yarn Y. The certain frequency is a predetermined value. The certain frequency may be input or be changeable

by an operator with the operation part 21b. The first yarn-defect information is not' limited to particular one, and may be any information if it is related to a defect of one portion of the yarn feeding bobbin B.

[0032] When an uneven twist has been formed in yarn Y of a yarn feeding bobbin B, the defect-information acquisition section 28 acquires, as the yarn-defect information, second yarn-defect information on this uneven twist. The second yarn-defect information is information prepared by the ring spinning frame 2 about the occurrence of the uneven twist. Whether an uneven twist is formed can be determined by a known method. When yarn breakage of yarn Y of a yarn feeding bobbin B has occurred at a frequency equal to or higher than a first frequency, the defect-information acquisition section 28 acquires, as the yarn-defect information, third yarn-defect information on the yarn breakage at a frequency equal to or higher than the first frequency. The third yarn-defect information is information prepared by the ring spinning frame 2 about the occurrence of the yarn breakage at a frequency equal to or higher than the first frequency. When yarn breakage of yarn Y of a yarn feeding bobbin B has occurred at a frequency lower than the first frequency and equal to or higher than a second frequency, the defect-information acquisition section 28 acquires, as the yarn-defect information, fourth yarn-defect information on the yarn breakage at a frequency lower than the first frequency and equal to or higher than the second frequency. The fourth yarn-defect information is information prepared by the ring spinning frame 2 about the occurrence of the yarn breakage at a frequency lower than the first frequency and equal to or higher than the second frequency. The third yarn-defect information and the fourth yarn-defect information relate to yarn breakage in one entire yarn feeding bobbin B. The first frequency and the second frequency are predetermined values. The first frequency and the second frequency may be input or be changeable by the operator with the operation part 21b. For example, setting can be made such that the third yarn-defect information is acquired when yarn breakage has occurred at a frequency equal to or higher than Y times within a yarn length of Xm as the first frequency, and such that the fourth yarn-defect information is acquired when yarn breakage has occurred at a frequency lower than Y times and equal to or higher than Z (Y>Z) times within the yarn length of Xm.

[0033] The ring spinning frame 2 includes a quality control controller 29. The quality control controller 29 manages yarn-defect information acquired by the defect-information acquisition section 28. The quality control controller 29 outputs the managed yarn-defect information to the RF writer 31 of the bobbin transfer device 3.

[0034] As illustrated in FIG. 5, the ring spinning frame 2 includes a path L2 for transferring a tray T and a conveyor C2. The path L2 includes a path L21 for transferring a tray T on which a yarn feeding bobbin B formed by each spinning unit 20 is set to the bobbin transfer device 3 and a path L22 for receiving a tray T on which an empty bobbin tube E is set from the bobbin transfer device 3. The conveyor C2 transfers a tray T on which a yarn feeding bobbin B or an empty bobbin tube E along the path L2.

Configuration of Automatic Winder 1

[0035] As illustrated in FIG. 4 and FIG. 6, the automatic winder 1 includes a plurality of winding units 10 each configured to form a package P from a yarn feeding bobbin B, a doffer 19 configured to doff the package P, a winding-machine control device 11 configured to control each winding unit 10 and the doffer 19, and a clearer management device 51.

[0036] As illustrated in FIG. 5, the automatic winder 1 includes a path L1 for transferring a tray T and a conveyor C1. The path L1 includes: a path L11 for transferring, to each winding unit 10, a tray T on which a yarn feeding bobbin B transferred from the bobbin transfer device 3 is set; and a path L12 for transferring a tray T on which an empty bobbin tube E, from which yarn Y has been wound by the winding unit 10, is set to the bobbin transfer device 3. The conveyor C1 transfers a tray T on which a yarn feeding bobbin B or an empty bobbin tube E is set along the path L1.

[0037] As illustrated in FIG. 6, each winding unit 10 includes, in the order from the upstream side toward the downstream side along the yarn path, a yarn feeder 12, a tension applying device 13, a splicing device 14, a yarn clearer 15 (hereinafter, simply called "clearer"), and a winding device 16 including a traverse drum configured to apply rotational force to a package P and traverse yarn Y from side to side. Furthermore, each winding unit 10-includes a unit controller 17 and the RF reader (information reading section) 18 as illustrated in FIG. 4. As the RF reader 18, an RF reader/writer having also a writing function may be used.

[0038] The yarn feeder 12 supports a yarn feeding bobbin B transferred through the path L11 and also assists unwinding of yarn Y from the yarn feeding bobbin B. The yarn feeder 12 discharges an empty bobbin tube E from which the yarn Y has been completely unwound to the path L12. The tension applying device 13 applies a predetermined tension to the yarn Y travelling from the yarn feeder 12 toward the winding device 16. The splicing device 14 is a device configured to splice together ends of yarn Y that has been divided for some reason such as a situation in which a yarn defect has been detected and the yarn Y has been cut accordingly.

[0039] The clearer 15 monitors the state of yarn Y travelling from the yarn feeder 12 toward the winding device 16 to detect a yarn defect between the yarn feeder 12 and the winding device 16. A result that has been detected by the clearer 15 of each winding unit 10 is sent to the clearer management device 51, and is managed therein. The clearer 15 determines whether to remove a detected yarn defect on the basis of a set clearing condition. If it has been determined that the yarn defect should be removed, the yarn Y is cut by a cutter to remove

the yarn defect. The cutter is provided to the clearer 15. Herein, the cutter may be provided separately from the clearer 15. Based on the result detected by the clearer 15, the clearer management device 51 records and manages yarn quality information about information on defects that have occurred, the number of yarn breakages (the number of times yarn Y has been cut to remove the defects), and variation and irregularity in yarn thickness or the length of fluff, for example.

[0040] The winding device 16 unwinds yarn Y from a yarn feeding bobbin B supported by the yarn feeder 12, and winds the unwound yarn Y to form a package P. The RF reader 18 reads, in a non-contact manner, yarn-defect information of a yarn feeding bobbin B transferred to the winding unit 10 from the RF tag T3 of a tray T on which the transferred yarn feeding bobbin B is set.

[0041] The unit controller 17 includes an electronic control unit having a CPU, a ROM, a RAM, an EEPROM, a communication device, and a storage device, for example. The unit controller 17 controls operations of the respective components of the winding unit 10 on the basis of instructions from the winding-machine control device 11. The unit controller 17 recognizes yarn information acquired when yarn Y is wound from a yarn feeding bobbin B on the basis of a detection result detected by the clearer 15. The yarn information includes at least one of an amount of time elapsed from the start of winding the yarn Y of the yarn feeding bobbin B, a piece of information on the frequency of yarn breakage, a piece of specific defect information, and a piece of yarn quality information. Information on the length of wound yarn Y is measured by the winding device 16 or a dedicated yarn length sensor (not illustrated) provided additionally, and is sent to the unit controller 17. The information on the length of yarn Y sent to the unit controller 17 is sent to the clearer 15 by the unit controller 17.

[0042] When having acquired yarn-defect information of a yarn feeding bobbin B from the RF reader 18, the unit controller 17 controls operation of the winding unit 10 on the basis of the yarn-defect information and the yarn information. Specifically, when having acquired first yarn-defect information, if the unit controller 17 has determined, based on the yarn information acquired when the yarn Y is wound from the yarn feeding bobbin B and the first yarn-defect information, that the yarn Y is unwound from the yarn feeding bobbin B up to a position corresponding to a partial defect of the first yarn-defect information, the unit controller 17 causes winding of the yarn Y from the yarn feeding bobbin B to stop, and causes the yarn feeding bobbin B to be forcibly discharged as a defective bobbin B1 to the path L12. The unit controller 17 transmits, as information for identifying this defective bobbin B1, identification information of a tray T on which the defective bobbin B1 is set to a discharge controller 42 described later.

[0043] For example, when the partial defect of the yarn Y in the first yarn-defect information is a yarn defect in a bottom portion of the yarn feeding bobbin B, the unit controller 17 determines whether the yarn Y has been unwound from the yarn feeding bobbin B up to the bottom portion or the vicinity thereof on the basis of the yarn information. As one example, when the total length of yarn Y unwound from a supplied yarn feeding bobbin B and wound around a package P has reached a predetermined specified length (e.g., 1200 m), the unit controller 17 determines that the yarn Y has been unwound from the yarn feeding bobbin B up to the bottom portion or the vicinity thereof. Alternatively, when the amount of time elapsed from the start of winding of the yarn feeding bobbin B has reached a predetermined specified time, the unit controller 17 determines that the yarn Y has been unwound from the yarn feeding bobbin B up to the bottom portion or the vicinity thereof. Still alternatively, when the frequency of yarn breakage (detection of yarn defects) during winding of the yarn feeding bobbin B has exceeded a predetermined specified frequency, the unit controller 17 determines that the yarn Y has been unwound from the yarn feeding bobbin B up to the bottom portion or the vicinity thereof. Subsequently, when having determined that the yarn Y has been unwound from the yarn feeding bobbin B up to the bottom portion or the vicinity thereof, the unit controller 17 causes winding of the yarn Y to stop, and causes the defective bobbin B1 having residual yarn on the bottom portion thereof to be forcibly discharged to the path L12.

[0044] When having acquired second yarn-defect information or third yarn-defect information, the unit controller 17 causes the yarn feeding bobbin B to be discharged as a defective bobbin B1 directly to the path L12 without winding the yarn Y from the yarn feeding bobbin B. The unit controller 17 transmits, as information for identifying this defective bobbin B1, identification information of a tray T on which the defective bobbin B1 is set to the discharge controller 42 described later.

[0045] When having acquired fourth yarn-defect information, the unit controller 17 determines whether the quality of the yarn feeding bobbin B satisfies a predetermined quality reference value on the basis of yarn information acquired when the yarn Y is wound from the yarn feeding bobbin B. When having determined that the quality reference value is not satisfied, the unit controller 17 causes winding of the yarn Y from the yarn feeding bobbin B to stop, and causes the yarn feeding bobbin B to be discharged as a defective bobbin B1 to the path L12. The quality reference value may be changed by the operator with an operation part 11b. Whether the quality of the yarn feeding bobbin B satisfies the quality reference value can be determined by a known determination method. The unit controller 17 transmits, as information for identifying this defective bobbin B1, identification information of a tray T on which the defective bobbin B1 is set to the discharge controller 42 described later.

[0046] Herein, when having acquired no yarn-defect information, the unit controller 17 controls operations of the respective components of the winding unit 10, and causes the winding device 16 to supply yarn Y of a yarn

feeding bobbin B set on the yarn feeder 12.

[0047] The doffer 19 doffs a package P formed by each winding unit 10. The single doffer 19 is provided to the winding units 10. The doffer 19 sends a doffed package P to a predetermined position (e.g., a conveyor provided behind the machine).

[0048] The winding-machine control device 11 includes an electronic control unit having a CPU, a ROM, a RAM, an EEPROM, a communication device, and a storage device, for example. The winding-machine control device 11 includes a display section 11a and the operation part 11b as illustrated in FIG. 4 and FIG. 6. The display section 11a displays at least a winding condition and operation data in each winding unit 10. With the operation part 11b, various types of operation input are performed by an operator, for example. The display section 11a and the operation part 11b may be configured with a touch panel. The winding-machine control device 11 is connected to the clearer management device 51 and a bobbin-transfer-device controller 39.

Configuration of Bobbin Transfer Device 3

[0049] As illustrated in FIG. 5, the bobbin transfer device 3 transfers a yarn feeding bobbin B from the ring spinning frame 2 to the automatic winder 1, and transfers an empty bobbin tube E from the automatic winder 1 to the ring spinning frame 2 as described above. The bobbin transfer device 3 includes a path L3 for transferring a tray T and a conveyor C3. The path L3 includes: a path L31 for transferring, to the automatic winder 1, a tray T on which a yarn feeding bobbin B transferred from the ring spinning frame 2 is set; and a path L32 for transferring, to the ring spinning frame 2, a tray T on which an empty bobbin tube E, from which yarn Y has been wound in the automatic winder 1, is set. The path L3 includes bypass paths L33 and L34 each connecting between the path L31 and the path L32. The bypass path L33 is provided closer to the automatic winder 1 than the bypass path L34 is. As described above, the path L2 provided to the ring spinning frame 2, the path L3 provided to the bobbin transfer device 3, and the path L1 provided to the automatic winder 1 constitute a path for transferring yarn feeding bobbins B and empty bobbin tubes E between the automatic winder 1 and the ring spinning frame 2.

[0050] The bobbin transfer device 3 includes the bobbin-transfer-device controller 39, the RF writer (information writing section) 31, a residual-yarn-amount detection sensor 32, a yarn-end preparation device 33, a yarn presence/absence detection sensor 34, a residual-yarn removal device 35, and a defective-bobbin discharge device (discharge device) 4. The RF writer 31 is provided near the path L31 for transferring a yarn feeding bobbin B formed by the ring spinning frame 2 to the automatic winder 1. When a yarn feeding bobbin B is transferred from the ring spinning frame 2 to the automatic winder 1, the bobbin-transfer-device controller 39 writes with the RF writer 31, in a noncontact manner, yarn-defect information (any one of first yarn-defect information to fourth yarn-defect information) in the yarn feeding bobbin B to the RF tag T3 of a tray T on which the yarn feeding bobbin B is set. The bobbin-transfer-device controller 39 is connected to the winding-machine control device 11 of the automatic winder 1.

[0051] Herein, the RF writer 31 does not necessarily have to be provided to the bobbin transfer device 3. The RF writer 31 may be provided to an exit of the ring spinning frame 2 in a direction in which a yarn feeding bobbin B is transferred. Alternatively, the RF writer 31 may be provided for each spinning unit 20. When trays that are different between the ring spinning frame 2 and the automatic winder 1 are used, the bobbin transfer device 3 may further include a transfer section, and at the transfer section, a yarn feeding bobbin B may be transferred from a tray for the ring spinning frame 2 to a tray for the automatic winder 1. In this case, the RF writer 31 may be provided at the transfer section or at a downstream position slightly apart from the transfer section in the direction in which a yarn feeding bobbin B is transferred, and information on a yarn feeding bobbin B may be written to an RF tag attached to a tray for the automatic winder 1.

[0052] The residual-yarn-amount detection sensor 32 detects the amount of residual yarn in a bobbin (each of a yarn feeding bobbin B and an empty bobbin tube E) to be transferred along the path L31. When the bobbin to be transferred along path L31 is a yarn feeding bobbin B on which yarn Y is present (remains), the yarn-end preparation device 33 performs processing of yarn ends for the yarn feeding bobbin B so as to be able to catch the yarn ends in the automatic winder 1. When the bobbin to be transferred along the path L31 is an empty bobbin tube E on which no yarn Y remains, the yarn-end preparation device 33 does not perform the processing of yarn ends. The conveyor C3 transfers a yarn feeding bobbin B for which processing of yarn ends has been performed by the yarn-end preparation device 33 along the path L31 to the automatic winder 1. When the residual-yarn-amount detection sensor 32 has detected that the bobbin to be transferred along the path L31 is an empty bobbin tube E on which no yarn Y remains, the conveyor C3 transfers the empty bobbin tube E from the path L31 to the path L32 through the bypass path L33.

[0053] The yarn presence/absence detection sensor 34 detects whether yarn Y remains on a bobbin (a yarn feeding bobbin B or an empty bobbin tube E) to be transferred along the path L32. If the bobbin to be transferred along the path L32 is a yarn feeding bobbin B on which yarn Y remains, the conveyor C3 transfers the yarn feeding bobbin B on which yarn Y remains from the path L32 to the residual-yarn removal device 35 through the bypass path L34. The residual-yarn removal device 35 removes the yarn Y from the yarn feeding bobbin B on which the yarn Y remains and that has been transferred along the bypass path L34, thereby obtaining an empty bobbin tube E. The empty bobbin tube E from which the yarn Y has been removed by the residual-yarn removal

device 35 is transferred from the bypass path L34 to the path L31 by the conveyor C3.

[0054] As illustrated in FIG. 4 and FIG. 5, the defective-bobbin discharge device 4 is a device capable of discharging a defective bobbin B1 outside the path L3, and the defective-bobbin discharge device 4 includes the RF reader 41, the discharge controller 42, a defective-bobbin discharge path L4, and a conveyor C4. The defective-bobbin discharge path L4 is provided in a manner branching off from a halfway portion of the path L32 for transferring a tray T from the automatic winder 1 to the ring spinning frame 2. Based on control of the discharge controller 42, the conveyor C4 takes a tray T on which a defective bobbin B1 is set from the path L32 into the defective-bobbin discharge path L4. Instead of the defective-bobbin discharge path L4, an automatic extracting device configured to pick up and discharge a defective bobbin B1 may be used.

[0055] The RF reader 41 is provided near the path L32 at a position that is closer to the automatic winder 1 than a junction between the path L32 and the defective-bobbin discharge path L4 is. The RF reader 41 reads, in a non-contact manner, an identification information stored in the RF tag T3 of a tray T transferred along the path L32. The discharge controller 42 acquires identification information of a tray T on which a defective bobbin B1 is set from the unit controller 17. Based on the identification information read by the RF reader 41 and the identification information acquired from the unit controller 17, the discharge controller 42 controls the conveyor C4 such that the defective bobbin B1 is discharged from the path L32 to the defective-bobbin discharge path L4.

[0056] In the automatic winder 1 configured as described above, yarn Y of a yarn feeding bobbin B transferred from the ring spinning frame 2 by the bobbin transfer device 3 is wound to form a package P. Herein, when a partial defect has occurred in yarn of a yarn feeding bobbin B in the ring spinning frame 2, the corresponding unit controller (controller) 17 of the automatic winder 1 acquires first yarn-defect information prepared by the ring spinning frame 2 about the occurrence of the partial defect. In the automatic winder 1, when the first yarn-defect information of the yarn feeding bobbin B has been acquired, if it has been determined, based on yarn information acquired when the yarn Y is wound from the yarn feeding bobbin B related to the acquired first yarn-defect information and the first yarn-defect information prepared by the ring spinning frame 2, that the yarn has been unwound from the yarn feeding bobbin B up to a position corresponding to the partial defect of the first yarn-defect information, winding of the yarn Y from the yarn feeding bobbin B is stopped. Thus, with the spinning system 100, in the automatic winder 1, the yarn Y up to the position corresponding to the partial defect of the yarn feeding bobbin B related to the first yarn-defect information (i.e., a portion of yarn Y having normal yarn quality) can be wound without wasting it. Thus, production efficiency can be prevented from decreasing. Herein, the yarn feeding bobbin B related to the first yarn-defect information is not limited to the yarn feeding bobbin itself for which the first yarn-defect information has been acquired. If a similar first yarn defect is assumed to be present also in another yarn feeding bobbin B in the same lot as the yarn feeding bobbin B for which the first yarn-defect information has been measured, this other yarn feeding bobbin B in the same lot as the yarn feeding bobbin B for which the first yarn-defect information has been measured may be included in the yarn feeding bobbin B related to the first yarn-defect information to be processed.

[0057] The unit controller 17 causes this yarn feeding bobbin B to be discharged as a defective bobbin B1 upon determining, based on the yarn information, that the yarn Y has been unwound from the yarn feeding bobbin B up to the position corresponding to the partial defect of the first yarn-defect information of the yarn feeding bobbin B. In this case, in the automatic winder 1, the yarn Y having the partial defect of the yarn feeding bobbin B can be reliably prevented frombeing wound. Furthermore, by preventing deletion of a predictable defective portion and successive occurrences of splicing, production efficiency in the automatic winder 1 is increased.

[0058] In the automatic winder 1, the first yarn-defect information is information on yarn breakage in a bottom portion of the yarn feeding bobbin B. In this case, in the automatic winder 1, the yarn Y up to the bottom portion of the yarn feeding bobbin B can be wound without wasting it. Generally, the quality of yarn Y in a bottom portion of a yarn feeding bobbin B is more likely to be poor. The information on yarn breakage in the bottom portion is considered, and, thus, an efficiency decrease can be prevented when yarn Y having a partial defect that occurs due to a production problem of the ring spinning frame 2 is wound by the automatic winder 1.

[0059] In the automatic winder 1, the yarn information includes at least one of pieces of information on the total length of yarn Y wound by the automatic winder 1, information on the length of yarn Y unwound from the yarn feeding bobbin B, and information on the frequency of yarn breakage that has occurred in the automatic winder 1. In this case, it can be specifically determined that the yarn Y has been unwound from the yarn feeding bobbin B up to the position corresponding to the partial defect. The information on the total length of yarn Y wound by the automatic winder 1 or information on the length of yarn Y unwound from the yarn feeding bobbin B is obtained by a yarn-length measuring mechanism. The yarn-length measuring mechanism includes the traverse drum provided to each winding device 16 or a dedicated yarn length sensor (not illustrated) provided additionally and the corresponding unit controller 17. The yarn-length measuring mechanism calculates the information on the total length of yarn Y wound by the automatic winder 1 or the information on the length of yarn Y unwound from the yarn feeding bobbin B on the basis of the number of rotations of the traverse drum provided to the winding device 16. Alternatively, with the dedicated yarn length

sensor (not illustrated) additionally provided, the yarn-length measuring mechanism measures the information on the total length of yarn Y wound by the automatic winder 1 or the information on the length of yarn Y unwound from the yarn feeding bobbin B. A result calculated from the number of rotations of the traverse drum or a result measured by the yarn length sensor is sent to the unit controller 17, and is managed as the total length of yarn Y wound by the automatic winder 1 or the length of yarn Y unwound from the yarn feeding bobbin B. The information on the length of yarn Y sent to the unit controller 17 is sent to the clearer 15 by the unit controller 17. The information on the total length of yarn Y wound by the automatic winder 1 and the information on the length of yarn Y unwound from the yarn feeding bobbin B may be managed based on the travelling speed of yarn Y and a period of time for which the yarn Y has travelled. Instead of, by the unit controller 17, managing the information on the total length of yarn Y wound by the automatic winder 1 and the information on the length of yarn Y unwound from the yarn feeding bobbin B, a controller for the management may be provided to the dedicated yarn length sensor.

[0060] The automatic winder 1 further includes a clearer 15 (yarn-quality monitoring device) configured to monitor the state of yarn Y to detect a yarn defect. The unit controller 17 manages the detection frequency of yarn defects measured by the clearer 15 as the yarn information. When the detection frequency of yarn defects exceeds a predetermined specified frequency, the unit controller 17 determines that the yarn Y has been unwound from the yarn feeding bobbin up to the position corresponding to the partial defect of the first yarn-defect information. In this case, without adding a special device like the yarn-length measuring mechanism, the unit controller 17 can determine that the yarn Y has been unwound from the yarn feeding bobbin up to the position corresponding to the partial defect of the first yarn-defect information. Thus, the automatic winder 1 can be built without cost increase.

[0061] The spinning system 100 includes the automatic winder 1 and the ring spinning frame 2. Each yarn feeding bobbin B is transferred by the bobbin transfer device 3 in a manner set on a tray T having an RF tag T3. The bobbin transfer device 3 includes the RF writer 31 configured to write yarn-defect information to the RF tag T3. The automatic winder 1 includes the RF readers 18 each configured to read the yarn-defect information written by the RF writer 31. In this case, the automatic winder 1 can acquire the yarn-defect information of each yarn feeding bobbin B, using the corresponding tray T having the RF tag T3, the RF writer 31, and the RF readers 18.

[0062] In the spinning system 100, when an uneven twist has been formed in yarn Y of a yarn feeding bobbin B, the ring spinning frame 2 acquires second yarn-defect information on this uneven twist, and when yarn breakage has occurred in yarn Y of a yarn feeding bobbin B at a frequency equal to or higher than the first frequency, the ring spinning frame 2 acquires third yarn-defect information on the yarn breakage at a frequency equal to or higher than the first frequency. When having acquired the second yarn-defect information or the third yarn-defect information of the yarn feeding bobbin B, the automatic winder 1 does not wind yarn Y from this yarn feeding bobbin B. Thus, in the automatic winder 1, the yarn Y of the yarn feeding bobbin B related to the second yarn-defect information or the third yarn-defect information can be prevented from being wound.

[0063] In the spinning system 100, when having acquired the second yarn-defect information or the third yarn-defect information of the yarn feeding bobbin B, the automatic winder 1 discharges this yarn feeding bobbin B as a defective bobbin B1 without winding the yarn Y from the yarn feeding bobbin B. Thus, in the automatic winder 1, the yarn Y of the yarn feeding bobbin B related to the second yarn-defect information or the third yarn-defect information can be reliably prevented from being wound.

[0064] There may be a situation in which it is difficult to determine, simply based on yarn-defect information acquired by the defect-information acquisition section 28, whether the yarn quality of the yarn feeding bobbin B is really poor. This is because the yarn-defect information acquired by the defect-information acquisition section 28 is estimated defective spindle information obtained based on the frequency of yarn breakage in spinning-bobbin or the number of spindle rotations, for example. Thus, it is desired to accurately determine the yarn quality of the yarn feeding bobbin B.

[0065] In view of this, in the spinning system 100, when yarn breakage has occurred in yarn Y of a yarn feeding bobbin B at a frequency lower than the first frequency and equal to or higher than the second frequency, the ring spinning frame 2 acquires fourth yarn-defect information (yarn-defect information) on yarn breakage at a frequency lower than the first frequency and equal to or higher than the second frequency. When having acquired the fourth yarn-defect information of the yarn feeding bobbin B, the automatic winder 1 determines (checks) whether the quality of the yarn feeding bobbin B satisfies the quality reference value on the basis of the yarn information acquired when the yarn Y is wound from the yarn feeding bobbin B. Thus, the yarn quality of the yarn feeding bobbin B related to the fourth yarn-defect information can be accurately determined (the determined yarn quality can be reliable). When having determined that the quality reference value is not satisfied, the automatic winder 1 stops winding the yarn Y from the yarn feeding bobbin B. Thus, when the yarn quality of the yarn feeding bobbin B related to the fourth yarn-defect information is really poor, the yarn Y can be prevented from being wound. Furthermore, winding of yarn Y in the automatic winder 1 is not always stopped, and if the automatic winder 1 has determined that the quality reference value is satisfied, the yarn Y can be wound by the automatic wind-

er 1 as usual to form a package P. Thus, production efficiency can be further prevented from decreasing.

[0066] In the spinning system 100, when having acquired the fourth yarn-defect information of the yarn feeding bobbin B, the automatic winder 1 determines whether the quality of the yarn feeding bobbin B satisfies the quality reference value on the basis of the yarn information acquired when the yarn Y is wound from the yarn feeding bobbin B, and when having determined that the quality reference value is not satisfied, the automatic winder 1 discharges this yarn feeding bobbin B as a defective bobbin. In this case, in the automatic winder 1, the yarn Y of the yarn feeding bobbin B that does not satisfy the quality reference value can be reliably prevented from being wound.

[0067] In the present embodiment, a case has been described in which the automatic winder 1 has acquired the fourth yarn-defect information of the yarn feeding bobbin B. However, the present disclosure is not limited to this. In the spinning system 100, when having acquired the second yarn-defect information or the third yarn-defect information of the yarn feeding bobbin B, the automatic winder 1 may determine whether the quality of the yarn feeding bobbin B satisfies the quality reference value on the basis of the yarn information acquired when the yarn Y is wound from the yarn feeding bobbin B, and when having determined that the quality reference value is not satisfied, the automatic winder 1 may discharge this yarn feeding bobbin B as a defective bobbin. Defect information measured by the ring spinning frame 2 cannot be checked as accurately as each clearer 15 provided to the automatic winder 1. Thus, how accurate the quality of the defect information measured by the ring spinning frame 2 is can be verified by checking the defect information measured by the ring spinning frame 2 with the clearer 15. After verification has been performed once, the defect information measured by the ring spinning frame 2 can be evaluated based on this verification result, and thus the reliability of the defect information measured by the ring spinning frame 2 is increased.

[0068] In the spinning system 100, the bobbin transfer device 3 includes the defective-bobbin discharge device 4 capable of discharging outside the path L3 a defective bobbin B1 discharged by the automatic winder 1. In this case, in the bobbin transfer device 3, the defective bobbin B1 can be discharged.

[0069] In the spinning system 100, the automatic winder 1 may acquire yarn-defect information via communication, or may acquire the yarn-defect information in response to operation input of an operator with the operation part 11b. In this case, the automatic winder 1 can acquire the yarn-defect information of a yarn feeding bobbin B, using the communication and the operation input.

[0070] Although the embodiment has been described above, one aspect of the present disclosure is not limited to the above embodiment, and various modifications may be made within the scope not departing from the gist of the present disclosure.

[0071] The embodiment may be configured such that ring spinning frames 2 the number of which is larger than that of automatic winders 1 are provided and a yarn feeding bobbin B is transferred to one automatic winder 1 from more than one ring spinning frame 2. In the embodiment, a defective bobbin B1 is discharged outside the path L3 by the defective-bobbin discharge device 4. However, the defective bobbin B1 may be used as an empty bobbin tube E after removing yarn Y therefrom by the residual-yarn removal device 35.

[0072] In the embodiment, the automatic winder 1 may acquire yarn-defect information from the ring spinning frame 2 via communication. In the embodiment, the bobbin transfer device 3 includes the residual-yarn-amount detection sensor 32, the yarn-end preparation device 33, the yarn presence/absence detection sensor 34, the residual-yarn removal device 35, and the bypass paths L33, L34, however, these may be appropriately omitted. In the embodiment, the RF readers 18, 41 do not necessarily have to read information from the RF tag T3 in a noncontact manner, and may read the information in a contact manner.

[0073] In one aspect of the present disclosure, the following steps 1 to 3 may be performed.

[0074] Step 1: Grasp the yarn amount of a yarn feeding bobbin B that is present in the automatic winder (yarn winding machine) 1 and the bobbin transfer device 3 (the total amount of yarn that has not yet been wound).

[0075] Step 2: Calculate the amount of yarn of a yarn feeding bobbin B that has been completely wound at final doffing (final doffing in the ring spinning frame 2). At this time, the amount of yarn is grasped for each yarn feeding bobbin B (for a yarn feeding bobbin B having a defective portion, both the normal yarn length and the yarn length of a defective portion thereof are managed).

[0076] Step 3: Supply yarn in an amount needed for full winding to a predetermined winding unit 10. When the yarn is supplied, for a yarn feeding bobbin B including a defective yarn, the amount of yarn except for the defective portion is calculated (the defective yarn is discharged without being wound).

[0077] Specifically, in this aspect of the present disclosure, the controller may perform: a first process of grasping the amount of yarn of a yarn feeding bobbin present in the yarn winding machine and the bobbin transfer device; a second process of calculating, for each yarn feeding bobbin, the amount of yarn of the yarn feeding bobbin that has been completely wound at final doffing in the spinning frame; and a third process of supplying yarn in an amount needed for full winding to a predetermined winding unit of the yarn winding machine. In the second process, the controller may, in the yarn feeding bobbin having defective yarn, manage both the length of normal yarn and the length of the defective yarn. In the third process, the controller may, in the yarn feeding bobbin having defective yarn, calculate the amount of yarn except for the defective yarn and also discharge the defective yarn without winding it. Herein, the controller can be

configured with at least a part of the winding-machine control device 11, the spinning-machine control device 21, and the bobbin-transfer-device controller 39. By this control, yarn in an amount needed for full winding can be supplied to the predetermined winding unit 10, whereby the lot can be prevented from ending up with an incompletely wound package . For example, when a yarn feeding bobbin B is uniformly distributed, the yarn feeding bobbin B becomes depleted at the time when five 1/2-packages have been formed as packages P. However, according to this aspect of the present disclosure, two fully wound packages and one 1/2-package can be completed as packages P.

[0078] In one aspect of the present disclosure, the amount (length) of yarn for each yarn feeding bobbin B may be managed as information. This management may be performed by the automatic winder (yarn winding machine) 1, or may be performed by the quality control controller 29. Specifically, in the management, the following processes are performed. After a package P has been wound in a predetermined winding unit 10, the clearer management device 51 calculates the ratio of defective yarn per bobbin on the basis of a measurement result of the clearer 15. For example, when the yarn length in a bobbin is 2489 meters and the length of defective yarn removed therefrom is 2.5 meters, the defective yarn length ratio is calculated to be 0.1%. For example, when the yarn length in a bobbin is 2489 meters and the length of defective yarn removed therefrom is 10 meters, the defective yarn length ratio is calculated to be 0.4%. In the ring spinning frame 2, the quality control controller 29, the automatic winder 1, or each spinning unit 20, this defective yarn length ratio is accumulated at each doffing. Instead of the number of defects as in the prior art, an alarm index using the length as an index can be included. By performing management with indices as described above to grasp that a defective yarn portion is discharged without being wound (grasp the length of normal yarn and grasp the length of defective yarn), setting of a threshold, for example, is facilitated. This threshold can be set flexibly by an operator, and thus the quality management is also facilitated.

[0079] The materials and shapes of the respective components in the embodiment and the modifications are not limited to those described above, and various types of materials and shapes may be used. Each configuration in the embodiment or the modifications may be optionally used for each configuration in another embodiment or modification. A part of each configuration in the embodiment or the modifications may be appropriately omitted within the scope not departing from the gist of one aspect of the present disclosure.

Claims

1. A yarn winding machine (1) configured to wind yarn of a yarn feeding bobbin (B) transferred from a spinning frame (2) by a bobbin transfer device (3) to form a package (P),
the yarn winding machine (1) comprising a controller (17), wherein
the controller (17) is configured to acquire first yarn-defect information prepared by the spinning frame (2) about the occurrence of the partial defect when a partial defect has occurred in the yarn of the yarn feeding bobbin (B) in the spinning frame (2), and
the controller (17) is configured to cause winding of the yarn from the yarn feeding bobbin (B) to stop upon determining that the yarn has been unwound from the yarn feeding bobbin (B) up to a position corresponding to the partial defect of the first yarn-defect information, based on yarn information of the yarn wound from the yarn feeding bobbin (B) related to the first yarn-defect information acquired and the first yarn-defect information prepared by the spinning frame (2), when the first yarn-defect information of the yarn feeding bobbin (B) has been acuired.

2. The yarn winding machine (1) according to claim 1, wherein the controller (17) is configured to cause this yarn feeding bobbin (B) to be discharged as a defective bobbin upon determining, based on the yarn information, that the yarn has been unwound from the yarn feeding bobbin (B) up to the position corresponding to the partial defect of the first yarn-defect information of the yarn feeding bobbin (B) .

3. The yarn winding machine (1) according to claim 1 or 2, wherein the first yarn-defect information is information on yarn breakage in a bottom portion of the yarn feeding bobbin (B).

4. The yarn winding machine (1) according to any one of claims 1 to 3, further comprising a yarn-length measuring mechanism configured to acquire, as the yarn information, information on total length of the yarn wound by the yarn winding machine (1) or information on length of the yarn unwound from the yarn feeding bobbin (B), wherein
the controller (17) is configured to determine that the yarn has been unwound from the yarn feeding bobbin (B) up to the position corresponding to the partial defect of the first yarn-defect information based on information on the total length of the yarn wound by the yarn winding machine (1) that the yarn-length measuring mechanism has calculated or information on the length of the yarn unwound from the yarn feeding bobbin (B) that the yarn-length measuring mechanism has measured.

5. The yarn winding machine (1) according to any one of claims 1 to 4, further comprising a yarn-quality monitoring device (15) configured to monitor a state of the yarn to detect a yarn defect, wherein
the controller (17) is configured to manage detection

frequency of yarn defects measured by the yarn-quality monitoring device (15) as the yarn information, and the controller (17) is configured to determine that the yarn has been unwound from the yarn feeding bobbin (B) up to the position corresponding to the partial defect of the first yarn-defect information when the detection frequency of yarn defects exceeds a predetermined specified frequency.

6. A spinning system comprising:

the yarn winding machine (1) according to any one of claims 1 to 5; and
a spinning frame (2), wherein
the yarn feeding bobbin (B) is transferred by the bobbin transfer device (3) in a manner set on a tray (T) having a storage section (T3),
the spinning frame (2) or the bobbin transfer device (3) includes an information writing section (31) configured to write the first yarn-defect information to the storage section (T3), and
the yarn winding machine (1) includes an information reading section (18) configured to read the first yarn-defect information written by the information writing section (31) .

7. The spinning system according to claim 6, wherein the spinning frame (2),

when an uneven twist has been formed in the yarn of the yarn feeding bobbin (B), is configured to acquire second yarn-defect information on this uneven twist, and
acquire thirdyarn-defect information on the yarn breakage at a frequency equal to or higher than the first frequency when yarn breakage has occurred in the yarn of the yarn feeding bobbin (B) at a frequency equal to or higher than a first frequency, and

the yarn winding machine (1),
when having acquired the second yarn-defect information or the third yarn-defect information of the yarn feeding bobbin, is configured to not wind the yarn from this yarn feeding bobbin.

8. The spinning system according to claim 7, wherein the yarn winding machine (1), when having acquired the second yarn-defect information or the third yarn-defect information of the yarn feeding bobbin (B), is configured to discharge this yarn feeding bobbin (B) as a defective bobbin without winding the yarn from the yarn feeding bobbin (B).

9. The spinning system according to claim 6, wherein the spinning frame (2)

when an uneven twist has been formed in the yarn of the yarn feeding bobbin (B), is configured to acquire second yarn-defect information on this uneven twist, and
when yarn breakage has occurred in the yarn of the yarn feeding bobbin (B) at a frequency equal to or higher than a first frequency, is configured to acquire third yarn-defect information on the yarn breakage at a frequency equal to or higher than the first frequency, and
the yarn winding machine (1),
is configured to determine whether quality of this yarn feeding bobbin (B) satisfies a predetermined quality reference value based on the yarn information acquired when the yarn is wound from the yarn feeding bobbin (B) when having acquired the second yarn-defect information or the third yarn-defect information of the yarn feeding bobbin (B), and
is configured to stop winding the yarn from the yarn feeding bobbin (B) when having determined that the quality reference value is not satisfied.

10. The spinning system according to claim 9, wherein the spinning frame (2) is configured to acquire fourth yarn-defect information on yarn breakage at a frequency lower than the first frequency and equal to or higher than the second frequency, when yarn breakage has occurred in the yarn of the yarn feeding bobbin (B) at a frequency lower than a first frequency and equal to or higher than a second frequency,
the yarn winding machine (1),

is configured to determine whether quality of this yarn feeding bobbin (B) satisfies a predetermined quality reference value based on the yarn information acquired when the yarn is wound from the yarn feeding bobbin (B) when having acquired the fourth yarn-defect information of the yarn feeding bobbin (B), and
to stop winding the yarn from the yarn feeding bobbin (B) when having determined that the quality reference value is not satisfied.

11. The spinning system according to claim 10, wherein the yarn winding machine (1) is configured to discharge this yarn feeding bobbin (B) as a defective bobbin when having determined that the quality reference value is not satisfied.

12. The spinning system according to claim 8 or 11, wherein the bobbin transfer device (3) includes a discharge device (4) capable of discharging outside a path the defective bobbin discharged by the yarn winding machine (1).

13. The spinning system according to any one of claims 6 to 12, wherein the yarn winding machine (1) is con-

figured to acquire the first yarn-defect information via communication or in response to operation input of an operator with an operation part (11b).

14. The spinning system according to any one of claims 6 to 13, wherein
the controller (17) is configured to perform:

a first process of grasping the amount of yarn of the yarn feeding bobbin (B) present in the yarn winding machine (1) and the bobbin transfer device (3);
a second process of calculating, for each yarn feeding bobbin (B), the amount of yarn of the yarn feeding bobbin (B) that has been completely wound at final doffing in the spinning frame (2) ; and
a third process of supply yarn in an amount needed for full winding to a predetermined winding unit (10) of the yarn winding machine (1), and
the controller (17) is configured to,
in the yarn feeding bobbin (B) having defective yarn, manage both the length of normal yarn and the length of the defective yarn in the second process, and
in the yarn feeding bobbin (B) having defective yarn, calculate the amount of yarn except for the defective yarn and also discharge the defective yarn without winding the defective yarn in the third process.

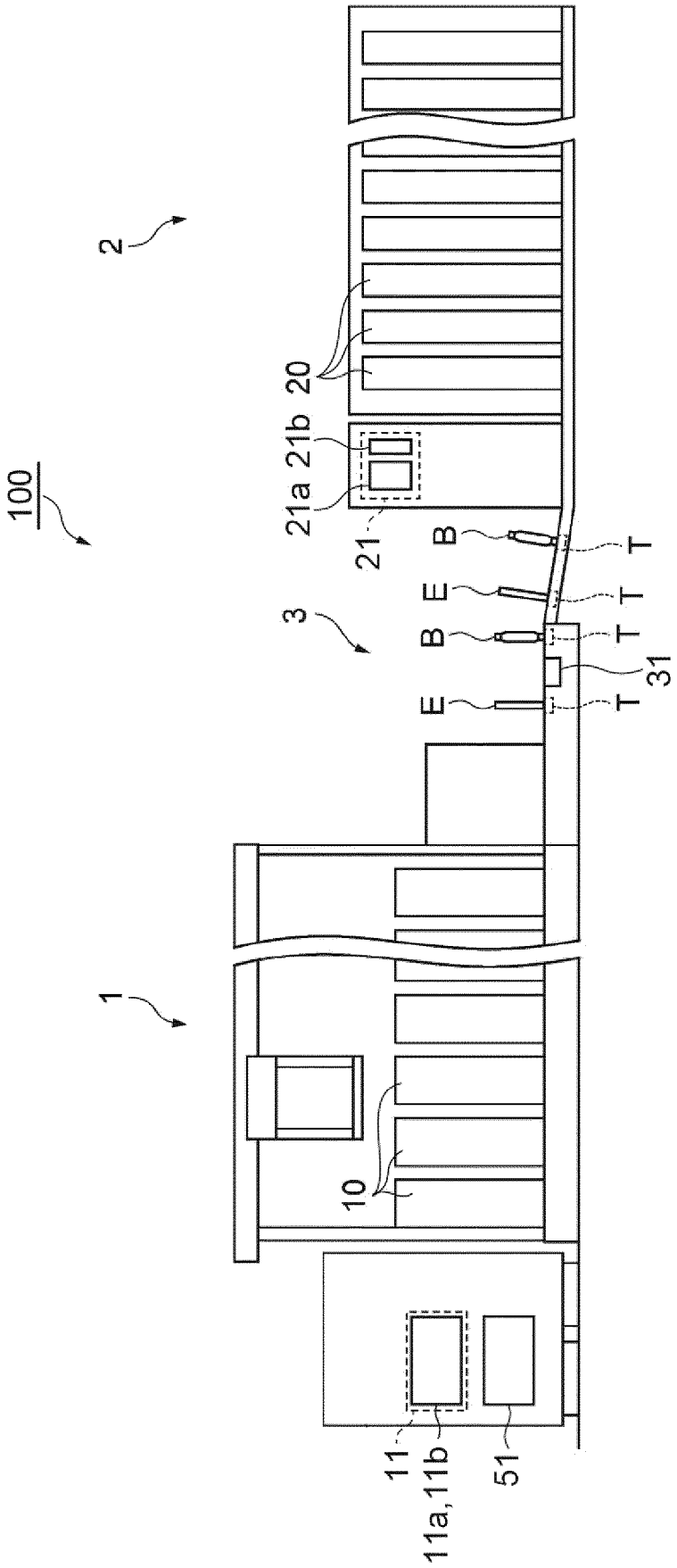

Fig.1

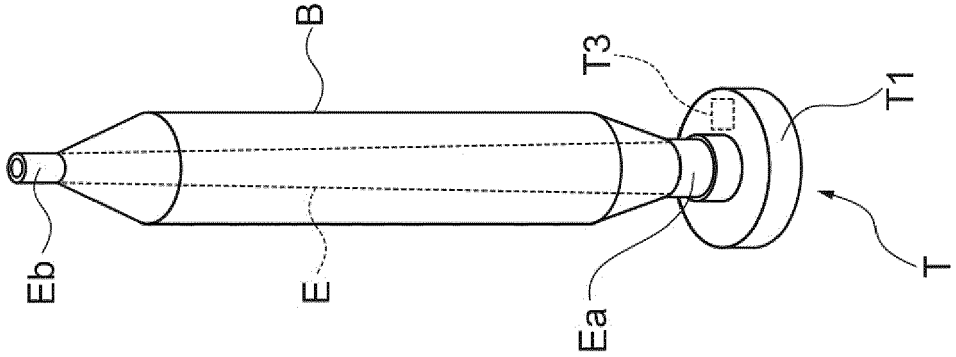

Fig.2C

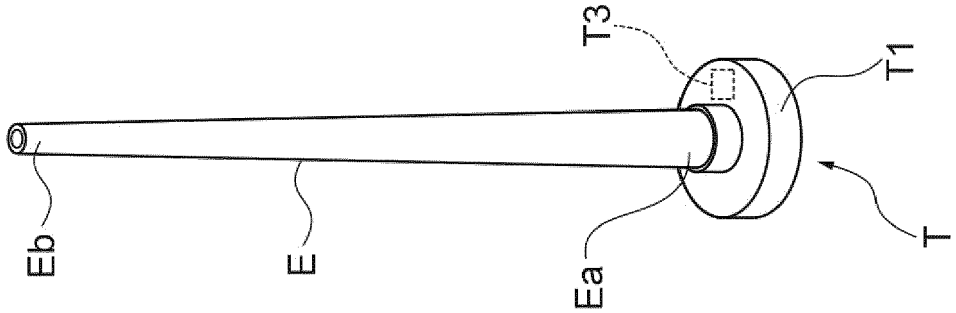

Fig.2B

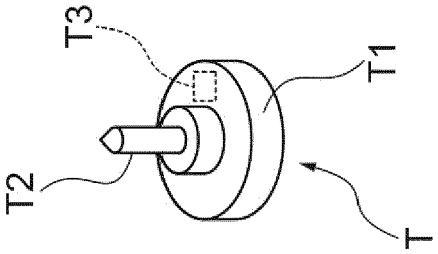

Fig.2A

Fig.3

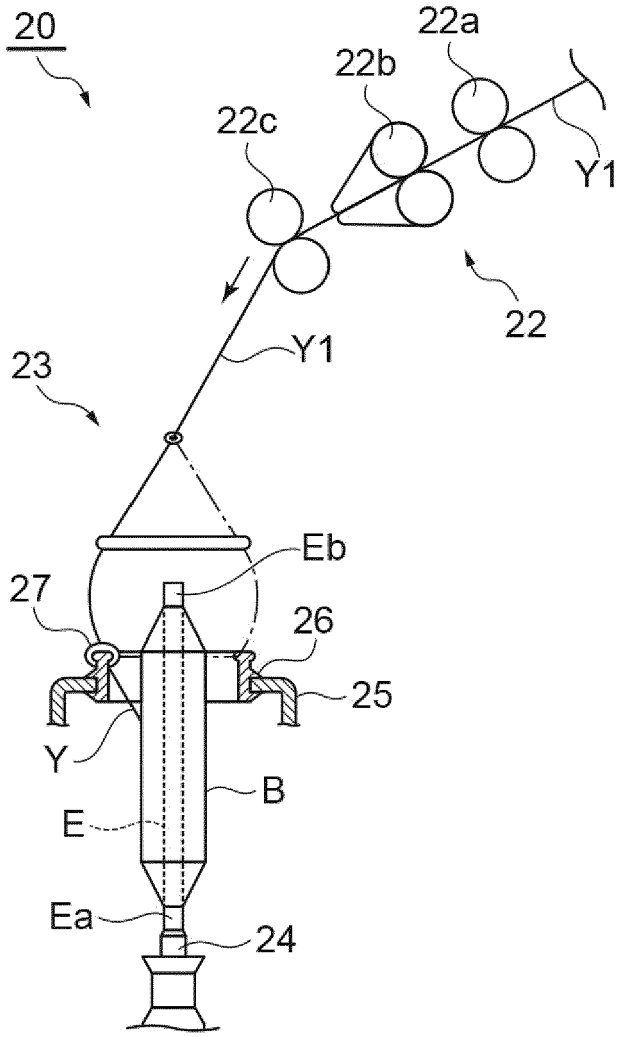

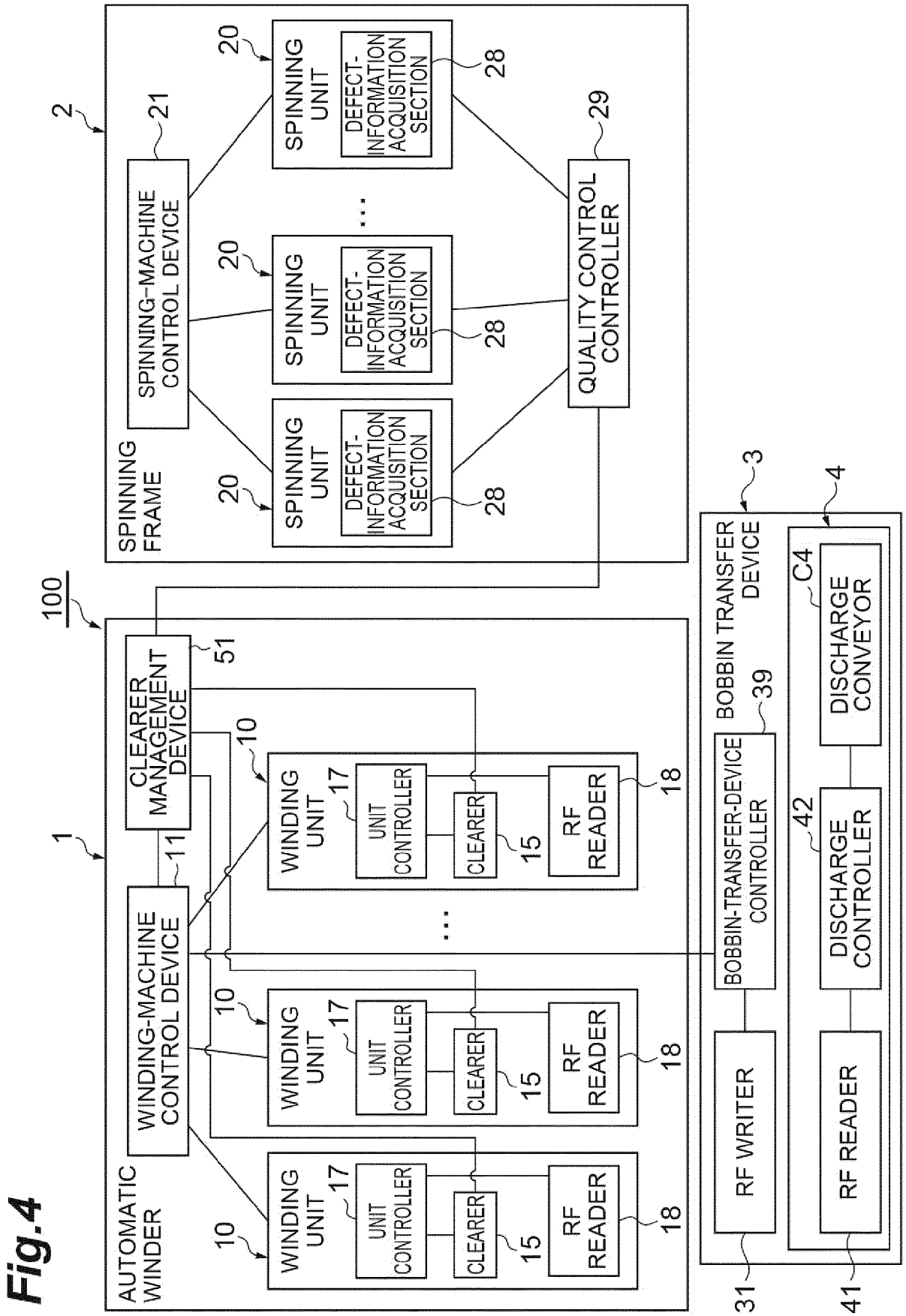
100
2
SPINNING FRAME
21
SPINNING-MACHINE CONTROL DEVICE
20
SPINNING UNIT
DEFECT-INFORMATION ACQUISITION SECTION
28
29
QUALITY CONTROL CONTROLLER
1
AUTOMATIC WINDER
51
CLEARER MANAGEMENT DEVICE
11
WINDING-MACHINE CONTROL DEVICE
10
WINDING UNIT
17
UNIT CONTROLLER
CLEARER
15
RF READER
18
3
BOBBIN TRANSFER DEVICE
39
BOBBIN-TRANSFER-DEVICE CONTROLLER
RF WRITER
31
4
C4
DISCHARGE CONVEYOR
42
DISCHARGE CONTROLLER
RF READER
41

Fig.4

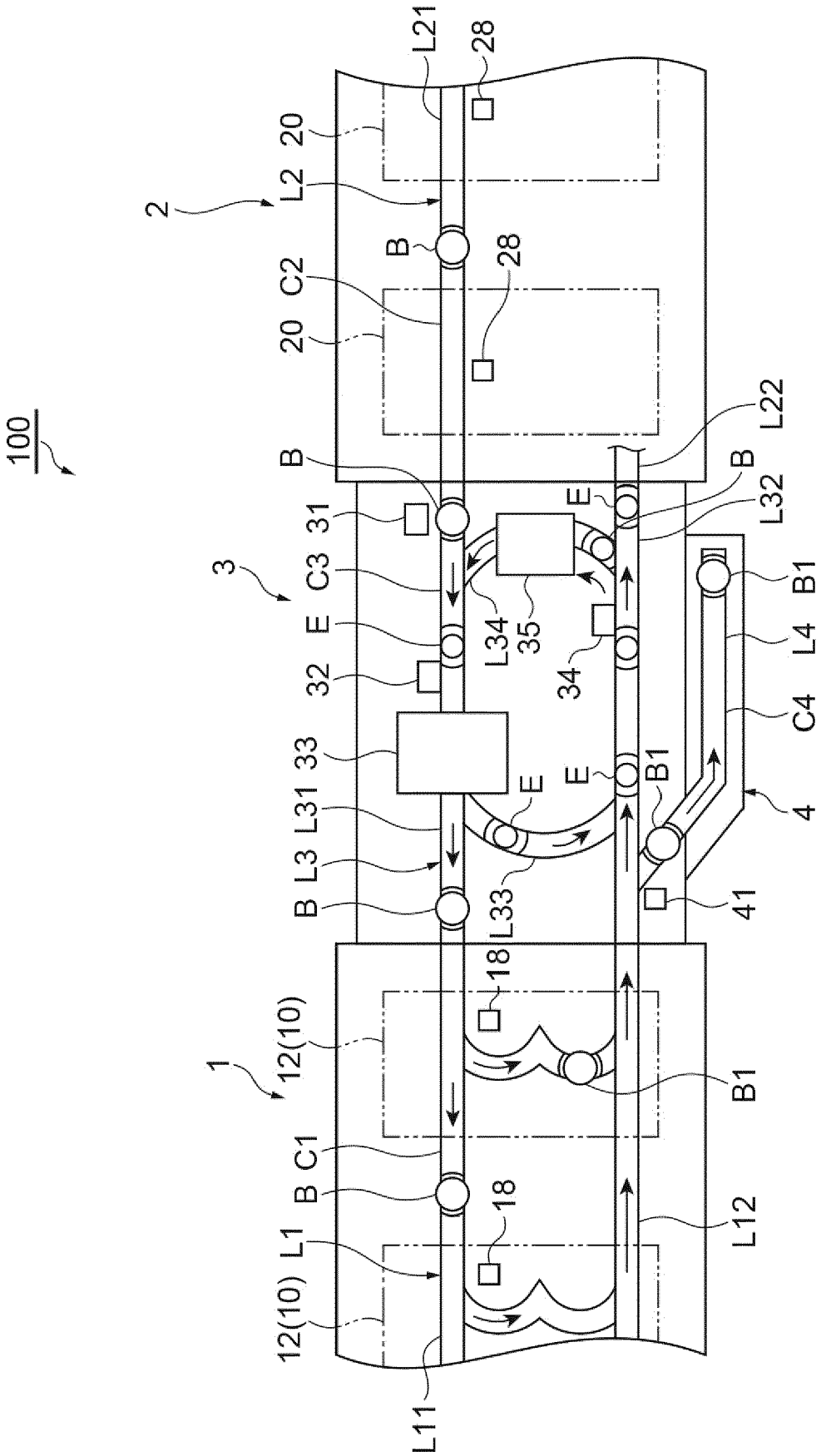
100
2
L2
20
L21
28
B
C2
20
28
B
31
3
C3
E
32
33
L31
L3
B
L34
35
34
E
B
L32
L22
B1
L4
C4
4
41
E
E
B1
L33
18
12(10)
1
B1
C1
B
18
L1
12(10)
L12
L11

Fig.5

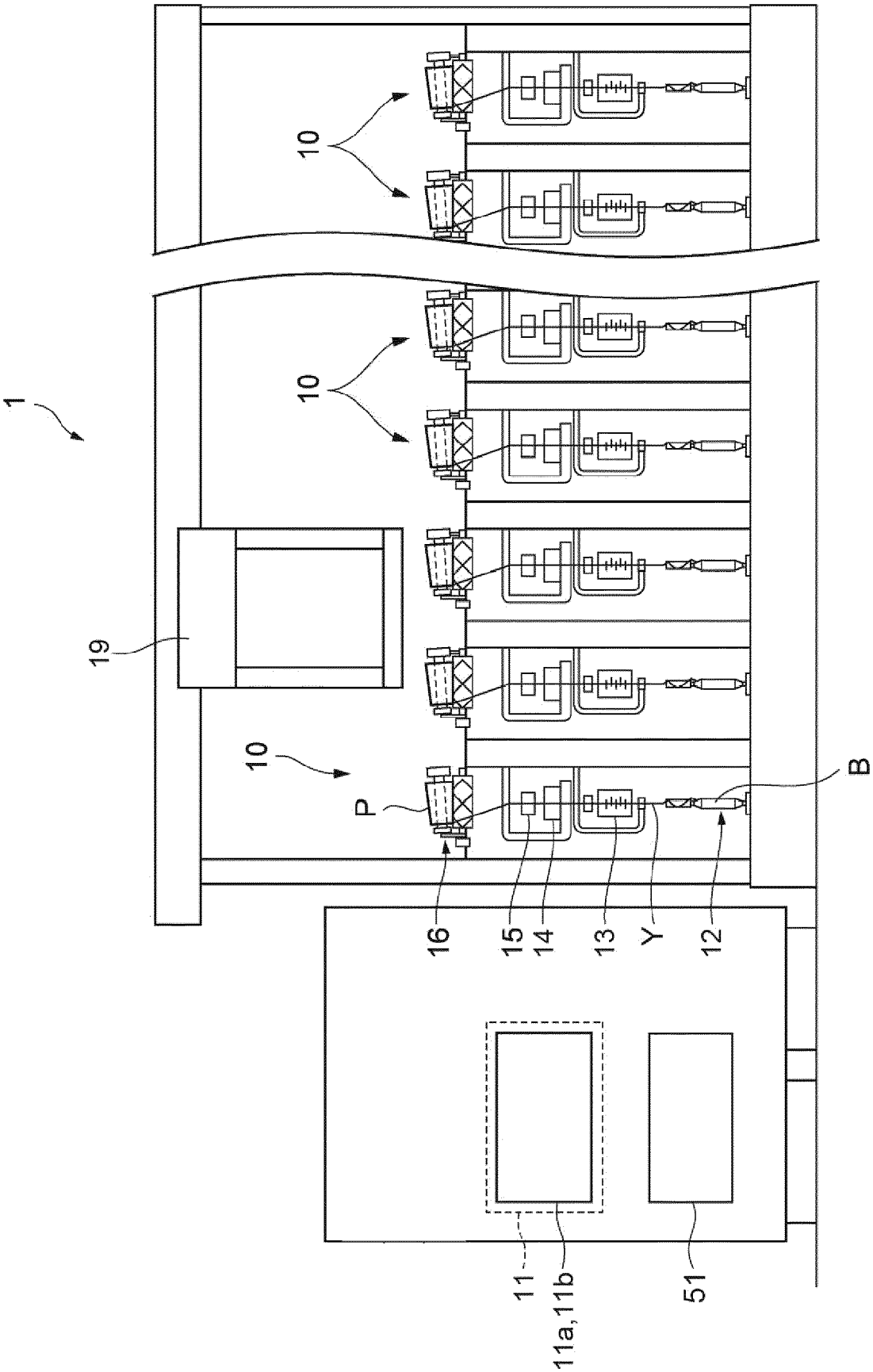

Fig.6

Europäisches Patentamt
European Patent Office
Office européen des brevets

EUROPEAN SEARCH REPORT

Application Number
EP 21 17 5905

DOCUMENTS CONSIDERED TO BE RELEVANT

Category	Citation of document with indication, where appropriate, of relevant passages	Relevant to claim	CLASSIFICATION OF THE APPLICATION (IPC)
A	WO 2019/111090 A1 (RIETER AG MASCHF [CH]) 13 June 2019 (2019-06-13) * page 4, line 25 - page 6, line 30; claims 1,8 *	1-14	INV. B65H67/06 B65H63/00 D01H13/32
A	EP 2 455 317 A1 (MURATA MACHINERY LTD [JP]) 23 May 2012 (2012-05-23) * paragraphs [0009], [0010], [0015] *	1	
A	EP 3 305 953 A1 (MURATA MACHINERY LTD [JP]) 11 April 2018 (2018-04-11) * paragraphs [0006] - [0016], [0033] - [0040] *	1	
A	EP 2 455 318 A1 (MURATA MACHINERY LTD [JP]) 23 May 2012 (2012-05-23) * paragraphs [0009] - [0022] *	1	
A	US 5 287 692 A (MATSUBAYASHI JUNICHI [JP]) 22 February 1994 (1994-02-22) * claims 1,9-12 *	1	

TECHNICAL FIELDS SEARCHED (IPC)

B65H
D01H

The present search report has been drawn up for all claims

Place of search	Date of completion of the search	Examiner
The Hague	1 October 2021	Pussemier, Bart

CATEGORY OF CITED DOCUMENTS

X : particularly relevant if taken alone
Y : particularly relevant if combined with another document of the same category
A : technological background
O : non-written disclosure
P : intermediate document

T : theory or principle underlying the invention
E : earlier patent document, but published on, or after the filing date
D : document cited in the application
L : document cited for other reasons
& : member of the same patent family, corresponding document

EPO FORM 1503 03.82 (P04C01)

ANNEX TO THE EUROPEAN SEARCH REPORT ON EUROPEAN PATENT APPLICATION NO. EP 21 17 5905

This annex lists the patent family members relating to the patent documents cited in the above-mentioned European search report.
The members are as contained in the European Patent Office EDP file on
The European Patent Office is in no way liable for these particulars which are merely given for the purpose of information.

01-10-2021

Patent document cited in search report		Publication date	Patent family member(s)			Publication date
WO 2019111090	A1	13-06-2019	CH	714412	A1	14-06-2019
			CN	111433397	A	17-07-2020
			EP	3720996	A1	14-10-2020
			JP	2021505782	A	18-02-2021
			WO	2019111090	A1	13-06-2019
EP 2455317	A1	23-05-2012	CN	102471009	A	23-05-2012
			EP	2455317	A1	23-05-2012
			JP	2011020837	A	03-02-2011
			WO	2011007512	A1	20-01-2011
EP 3305953	A1	11-04-2018	CN	107429436	A	01-12-2017
			EP	3305953	A1	11-04-2018
			JP	2017002415	A	05-01-2017
			WO	2016194496	A1	08-12-2016
EP 2455318	A1	23-05-2012	CN	102471008	A	23-05-2012
			EP	2455318	A1	23-05-2012
			JP	2011020838	A	03-02-2011
			WO	2011007513	A1	20-01-2011
US 5287692	A	22-02-1994	DE	4023795	A1	07-02-1991
			IT	1241505	B	17-01-1994
			JP	H0356373	A	11-03-1991
			JP	H0676177	B2	28-09-1994
			US	5287692	A	22-02-1994

EPO FORM P0459

For more details about this annex : see Official Journal of the European Patent Office, No. 12/82

REFERENCES CITED IN THE DESCRIPTION

This list of references cited by the applicant is for the reader's convenience only. It does not form part of the European patent document. Even though great care has been taken in compiling the references, errors or omissions cannot be excluded and the EPO disclaims all liability in this regard.

Patent documents cited in the description

- WO 2018212293 A **[0002]**